STUDER A820 MCH MKII

Circuit-diagrams, options and spare parts

Schemata, Optionen und Ersatzteile

Prepared and edited by STUDER INTERNATIONAL (a division of STUDER REVOX AG) TECHNICAL DOCUMENTATION
Althardstrasse 10, CH-8105 Regensdorf-Zürich

We reserve the right to make alterations
Copyright by STUDER REVOX AG
printed in Switzerland
Order No.: 10.27.1901 (Ed. 07.92)
STUDER is a registered trade mark of STUDER REVOX AG Regensdorf
STUDER ist ein eingetragenes Warenzeichen der STUDER REVOX AG Regensdorf

Contents

5	Signal Wire List / Signal-Verdrahtungsliste
6	Diagrams Power Supply and Tape Deck Control
7	Diagrams Master
8	Diagrams Audio
9	Diagrams Accessories
10	Spare Parts

A Safety Information

CAUTION RISK OF ELECTRIC SHOCK DO NOT OPEN ATTENTION RISQUE DE CHOC ELECTRIQUE NE PAS OUVRIR ACHTUNG GEFAHR: ELEKTRISCHER SCHLAG NICHT ÖFFNEN	To reduce the risk of electric shock, do not remove covers. No user-serviceable parts inside. Refer servicing to qualified service personnel (i.e., persons having appropriate technical training and experience necessary to be aware of hazards to which they are exposed in performing a repair action, and of measures to minimize the danger of themselves).
	This symbol alerts the user to the presence of un-insulated *dangerous voltage* within the equipment that may be of sufficient magnitude to constitute a risk of electric shock to a person.
	This symbol alerts the user to *important instructions* for operating and maintenance in this documentation.
CLASS I LED PRODUCT CLASS I LASER PRODUCT	Assemblies or sub-assemblies of this product can contain opto-electronic devices. As long as these devices comply with Class I of laser or LED products according to EN 60825-1:1994, they will not be expressly marked on the product. If a special design should be covered by a higher class of this standard, the device concerned will be marked directly on the assembly or sub-assembly in accordance with the above standard.

A1 First Aid

In Case of Electric Shock:

Separate the person as quickly as possible from the electric power source:

- By switching off the equipment,
- By unplugging or disconnecting the mains cable, or
- By pushing the person away from the power source, using dry, insulating material (such as wood or plastic).
- After having suffered an electric shock, *always* consult a doctor.

Warning! ***Do not touch the person or his clothing before the power is turned off, otherwise you stand the risk of suffering an electric shock as well!***

If the Person is Unconscious:

- Lay the person down
- Turn him to one side
- Check the pulse
- Reanimate the person if respiration is poor
- *Call for a doctor immediately.*

B General Installation Instructions

Please consider besides these general instructions also any product-specific instructions in the "Installation" chapter of this manual.

B1 Unpacking

Check the equipment for any transport damage. If the unit is mechanically damaged, if liquids have been spilled or if objects have fallen into the unit, *it must not be connected to the AC power outlet, or it must be immediately disconnected by unplugging the power cable.* Repair must only be performed by trained personnel in accordance with the applicable regulations.

B2 Installation Site

Install the unit in a place where the following conditions are met:

- The temperature and the relative humidity of the environment must be within the specified limits during operation of the unit. Relevant values are the ones at the air inlets of the unit.
- Condensation must be avoided. If the unit is installed in a location with large variation of ambient temperature (e.g. in an OB-van), appropriate precautions must be taken before and after operation (for details on this subject, refer to Appendix 1).
- Unobstructed air flow is essential for proper operation. Air vents of the unit are a functional part of the design and must not be blocked in any way during operation (e.g. by objects placed upon them, placement of the unit on a soft surface, or installation of the unit within a rack or piece of furniture).
- The unit must not be heated up by external sources of heat radiation (sunlight, spot lights).

B3 Earthing and Power Supply

Earthing of units with mains supply (class I equipment) is performed via the protective earth (PE) conductor integrated in the mains cable. Units with battery operation (< 60 V, class III equipment) must be earthed separately.

Earthing the unit is one of the measures for protection against electrical shock hazard (dangerous body currents). Hazardous voltage may not only be caused by a defective power supply insulation, but may also be introduced by the connected audio or control cables.

If the unit is installed with one or several external connections, its earthing must be provided during operation as well as while the unit is not operated. If the earthing connection can be interrupted, for example, by unplugging the mains plug of an external power supply unit, an additional, permanent earthing connection must be installed using the provided earth terminal.

Avoid ground loops (hum loops) by keeping the loop surface as small as possible (by consequently guiding the earth conductors in a narrow, parallel way), and reduce the noise current flowing through the loop by inserting an additional impedance (common-mode choke).

Class I Equipment (Mains Operation)

Should the equipment be delivered without a matching mains cable, the latter has to be prepared by a trained person using the attached female plug (IEC320/C13 or IEC320/C19) with respect to the applicable regulations in your country.
Before connecting the equipment to the AC power outlet, check that the local line voltage matches the equipment rating (voltage, frequency) within the admissible tolerance. The equipment fuses must be rated in accordance with the specifications on the equipment.
Equipment supplied with a 3-pole appliance inlet (protection conforming to class I equipment) *must* be connected to a 3-pole AC power outlet so that the equipment cabinet is connected to the protective earth.
For information on mains cable strain relief please refer to Appendix 2.

Female Plugs (IEC320), Front-Side View:

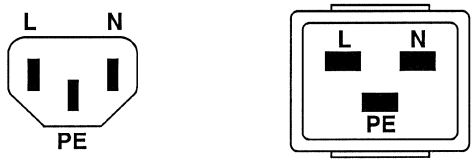

IEC 320 / C13 IEC 320 / C19

European Standard (CENELEC)		North American Standard (NAS)
Brown	L (Live)	Black
Blue	N (Neutral)	White
Green/Yellow	PE (Protective Earth)	Green (or Green/Yellow)

Class III Equipment (Battery Operation up to 60 V_{DC})

Equipment of this protection class must be earthed using the provided earth terminal, if one or more external signals are connected to the unit (see explanation at the beginning of this paragraph).

B4 Electromagnetic Compatibility (EMC)

The unit conforms to the protection requirements relevant to electromagnetic phenomena that are listed in guidelines 89/336/EC and FCC, part 15.

- The electromagnetic interference generated by the unit is limited in such a way that other equipment and systems can be operated normally.
- The unit is adequately protected against electromagnetic interference so that it can operate properly.

The unit has been tested and conforms to the EMC standards of the specified electromagnetic environment, as listed in the following declaration. The limits of these standards ensure protection of the environment and corresponding noise immunity of the equipment with appropriate probability. However, a professional installation and integration within the system are imperative prerequisites for operation without EMC problems.
For this purpose, the following measures must be followed:

- Install the equipment in accordance with the operating instructions. Use the supplied accessories.
- In the system and in the vicinity where the equipment is installed, use only components (systems, equipment) that also fulfill the EMC standards for the given environment.
- Use a system grounding concept that satisfies the safety requirements (class I equipment must be connected with a protective ground conduc-

tor) and that also takes into consideration the EMC requirements. When deciding between radial, surface, or combined grounding, the advantages and disadvantages should be carefully evaluated in each case.

- Use shielded cables where shielding is specified. The connection of the shield to the corresponding connector terminal or housing should have a large surface and be corrosion-proof. Please note that a cable shield connected only single-ended can act as a transmitting or receiving antenna within the corresponding frequency range.
- Avoid ground loops or reduce their adverse effects by keeping the loop surface as small as possible, and reduce the noise current flowing through the loop by inserting an additional impedance (e.g. common-mode choke).
- Reduce electrostatic discharge (ESD) of persons by installing an appropriate floor covering (e.g. a carpet with permanent electrostatic filaments) and by keeping the relative humidity above 30%. Further measures (e.g. conducting floor) are usually unnecessary and only effective if used together with corresponding personal equipment.
- When using equipment with touch-sensitive operator controls, please take care that the surrounding building structure allows for sufficient capacitive coupling of the operator. This coupling can be improved by an additional, conducting surface in the operator's area, connected to the equipment housing (e.g. metal foil underneath the floor covering, carpet with conductive backing).

C Maintenance

All air vents and openings for operating elements (faders, rotary knobs) must be checked on a regular basis, and cleaned in case of dust accumulation. For cleaning, a soft paint-brush or a vacuum cleaner is recommended.
Cleaning the surfaces of the unit is performed with a soft, dry cloth or a soft brush.
Persistent contamination can be treated with a cloth that is slightly humidified with a mild cleaning solution (soap-suds).
For cleaning display windows, commercially available computer/TV screen cleaners are suited. Use only a slightly damp (never wet) cloth.
Never use any solvents for cleaning the exterior of the unit! Liquids must never be sprayed or poured on directly!
For equipment-specific maintenance information please refer to the corresponding chapter in the Operating and Service Instructions manuals.

D Electrostatic Discharge during Maintenance and Repair

Caution:

Observe the precautions for handling devices sensitive to electrostatic discharge!
Many semiconductor components are sensitive to electrostatic discharge (ESD). The life-span of assemblies containing such components can be drastically reduced by improper handling during maintenance and repair work. Please observe the following rules when handling ESD sensitive components:

- ESD sensitive components should only be stored and transported in the packing material specifically provided for this purpose.
- *When performing a repair by replacing complete assemblies, the removed assembly must be sent back to the supplier in the same packing*

material in which the replacement assembly was shipped. If this should not be the case, any claim for a possible refund will be null and void.

- Unpacked ESD sensitive components should only be handled in ESD protected areas (EPA, e.g. area for field service, repair or service bench) and only be touched by persons who wear a wristlet that is connected to the ground potential of the repair or service bench by a series resistor. The equipment to be repaired or serviced as well as all tools and electrically semi-conducting work, storage, and floor mats should also be connected to this ground potential.
- The terminals of ESD sensitive components must not come in uncontrolled contact with electrostatically chargeable (voltage puncture) or metallic surfaces (discharge shock hazard).
- To prevent undefined transient stress of the components and possible damage due to inadmissible voltages or compensation currents, electrical connections should only be established or separated when the equipment is switched off and after any capacitor charges have decayed.

E Repair

Removal of housing parts, shields, etc. exposes energized parts. For this reason the following precautions must be observed:

- Maintenance may only be performed by trained personnel in accordance with the applicable regulations.
- The equipment must be switched off and disconnected from the AC power outlet before any housing parts are removed.
- Even if the equipment is disconnected from the power outlet, parts with hazardous charges (e.g. capacitors, picture tubes) must not be touched until they have been properly discharged. Do not touch hot components (power semiconductors, heat sinks, etc.) before they have cooled off.
- If maintenance is performed on a unit that is opened and switched on, no un-insulated circuit components and metallic semiconductor housings must be touched, neither with your bare hands nor with un-insulated tools.

Certain components pose additional hazards:

- *Explosion hazard* from lithium batteries, electrolytic capacitors and power semiconductors (watch the component's polarity. Do not short battery terminals. Replace batteries only by the same type).
- *Implosion hazard* from evacuated display units.
- *Radiation hazard* from laser units (non-ionizing), picture tubes (ionizing).
- *Caustic effect* of display units (LCD) and components containing liquid electrolyte.

Such components should only be handled by trained personnel who are properly protected (e.g. safety goggles, gloves).

E1 SMD Components

Studer has no commercially available SMD components in stock for service purposes. For repair, the corresponding devices have to be purchased locally. The specifications of special components can be found in the service manual.
SMD components should only be replaced by skilled specialists using appropriate tools. No warranty claims will be accepted for circuit boards that have been damaged. Proper and improper SMD soldering joints are illustrated below.

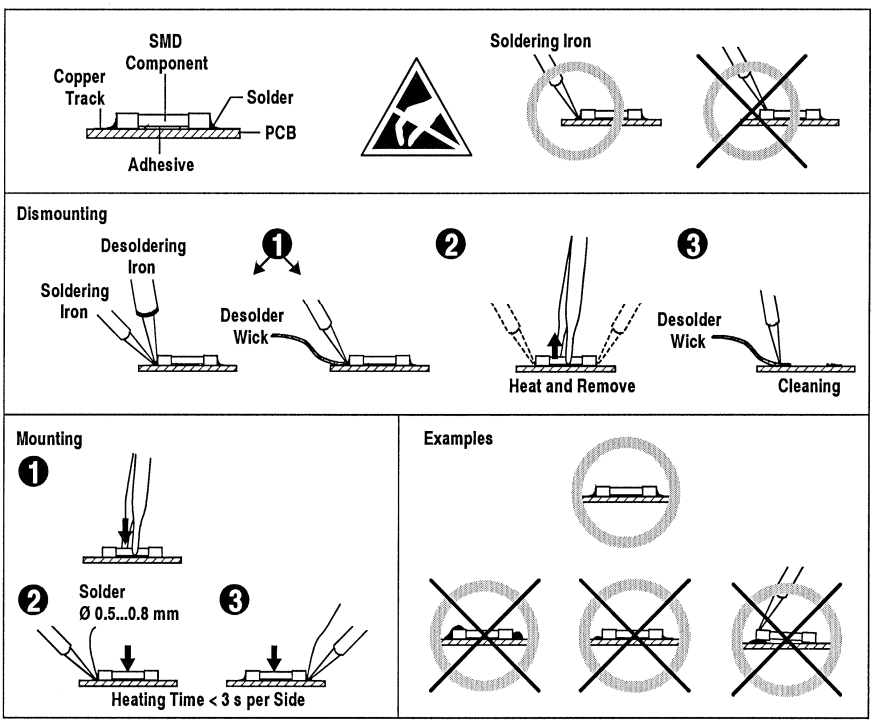

F Disposal

Disposal of Packing Materials

The packing materials have been selected with environmental and disposal issues in mind. All packing material can be recycled. Recycling packing saves raw materials and reduces the volume of waste.
If you need to dispose of the transport packing materials, please try to use recyclable means.

Disposal of Used Equipment

Used equipment contains valuable raw materials as well as materials that must be disposed of professionally. Please return your used equipment via an authorized specialist dealer or via the public waste disposal system, ensuring any material that can be recycled is.
Please take care that your used equipment cannot be abused. To avoid abuse, delete sensitive data from any data storage media. After having disconnected your used equipment from the mains supply, make sure that the mains connector and the mains cable are made useless.

G Declarations of Conformity

G1 Class A Equipment - FCC Notice

This equipment has been tested and found to comply with the limits for a Class A digital device, pursuant to Part 15 of the FCC Rules. These limits are designed to provide a reasonable protection against harmful interference when the equipment is operated in a commercial environment. This equipment generates, uses, and can radiate radio frequency energy and, if not installed and used in accordance with the instruction manual, may cause harmful interference to radio communications. Operation of this equipment in a residential area is likely to cause harmful interference, in which case the user will be required to correct the interference at his own expense.

Caution: *Any changes or modifications not expressly approved by the manufacturer could void the user's authority to operate the equipment. Also refer to relevant information in this manual.*

G2 CE Declaration of Conformity

We,

Studer Professional Audio GmbH,
CH-8105 Regensdorf,

declare under our sole responsibility that the product

Studer A820 MCH, Professional Multi-Channel Tape Recorder

to which this declaration relates, according to following regulations of EU directives and amendments

- Low Voltage (LVD):
  73/23/EEC + 93/68/EEC
- Electromagnetic Compatibility (EMC):
  89/336/EEC + 92/31/EEC + 93/68/EEC

is in conformity with the standards or normative documents listed in the "Technical Data" (Safety and EMC Standards) chapter in this manual.

Regensdorf, June 16, 1995

B. Hochstrasser, President

P. Fiala, Manager QA

Appendix 1: Air Temperature and Humidity

General

Normal operation of the unit or system is warranted under the following ambient conditions defined by *EN 60721-3-3, set IE32, value 3K3.*
This standard consists of an extensive catalogue of parameters, the most important of which are: ambient temperature +5...+40 °C, relative humidity 5...85% (i.e., no formation of condensation or ice); absolute humidity 1...25 g/m³; rate of temperature change < 0.5 °C/min. These parameters are dealt with in the following paragraphs.
Under these conditions the unit or system starts and works without any problem. Beyond these specifications, possible problems are described in the following paragraphs.

Ambient Temperature

Units and systems by Studer are generally designed for an ambient temperature range (i.e. temperature of the incoming air) of +5...+40 °C. When rack mounting the units, the intended air flow and herewith adequate cooling must be provided. The following facts must be considered:

- The admissible ambient temperature range for operation of the semiconductor components is 0 °C to +70 °C (commercial temperature range for operation).
- The air flow through the installation must provide that the outgoing air is always cooler than 70 °C.
- Average heat increase of the cooling air shall be about 20 K, allowing for an additional maximum 10 K increase at the hot components.
- In order to dissipate 1 kW with this admissible average heat increase, an air flow of 2.65 m³/min is required.

Example: A rack dissipating *P = 800 W* requires an air flow of *0.8 * 2.65 m³/min* which corresponds to *2.12 m³/min.*

- If the cooling function of the installation must be monitored (e.g. for fan failure or illumination with spot lamps), the outgoing air temperature must be measured directly above the modules at several places within the rack. The trigger temperature of the sensors should be 65 to 70 °C.

Frost and Dew

The unsealed system parts (connector areas and semiconductor pins) allow for a minute formation of ice or frost. However, formation of dew visible with the naked eye will already lead to malfunctions. In practice, reliable operation can be expected in a temperature range above –15 °C, if the following general rule is considered for putting the cold system into operation:
If the air within the system is cooled down, the relative humidity rises. If it reaches 100%, condensation will arise, usually in the boundary layer between the air and a cooler surface, together with formation of ice or dew at sensitive areas of the system (contacts, IC pins, etc.). Once internal condensation occurs, trouble-free operation cannot be guaranteed, independent of temperature.

Before putting into operation, the system must be checked for internal formation of condensation or ice. Only with a minute formation of ice, direct

evaporation (sublimation) may be expected; otherwise the system must be heated and dried while switched off.
A system without visible internal formation of ice or condensation should be heated up with its own heat dissipation, as homogeneously (and subsequently as slow) as possible; the ambient temperature should then always be lower than the one of the outgoing air.
If it is absolutely necessary to operate the cold system immediately within warm ambient air, this air must be dehydrated. In such a case, the absolute humidity must be so low that the relative humidity, related to the coldest system surface, always remains below 100%.
Ensure that the enclosed air is as dry as possible when powering off (i.e. before switching off in winter, aerate the room with cold, dry air, and remove humid objects as clothes from the room).
These relationships are visible from the following climatogram. For a controlled procedure, thermometer and hygrometer as well as a thermometer within the system will be required.

Example 1: An OB-van having an internal temperature of 20 °C and relative humidity of 40% is switched off in the evening. If temperature falls below +5 °C, dew or ice will be forming.

Example 2: An OB-van is heated up in the morning with air of 20 °C and a relative humidity of 40%. On all parts being cooler than +5 °C, dew or ice will be forming.

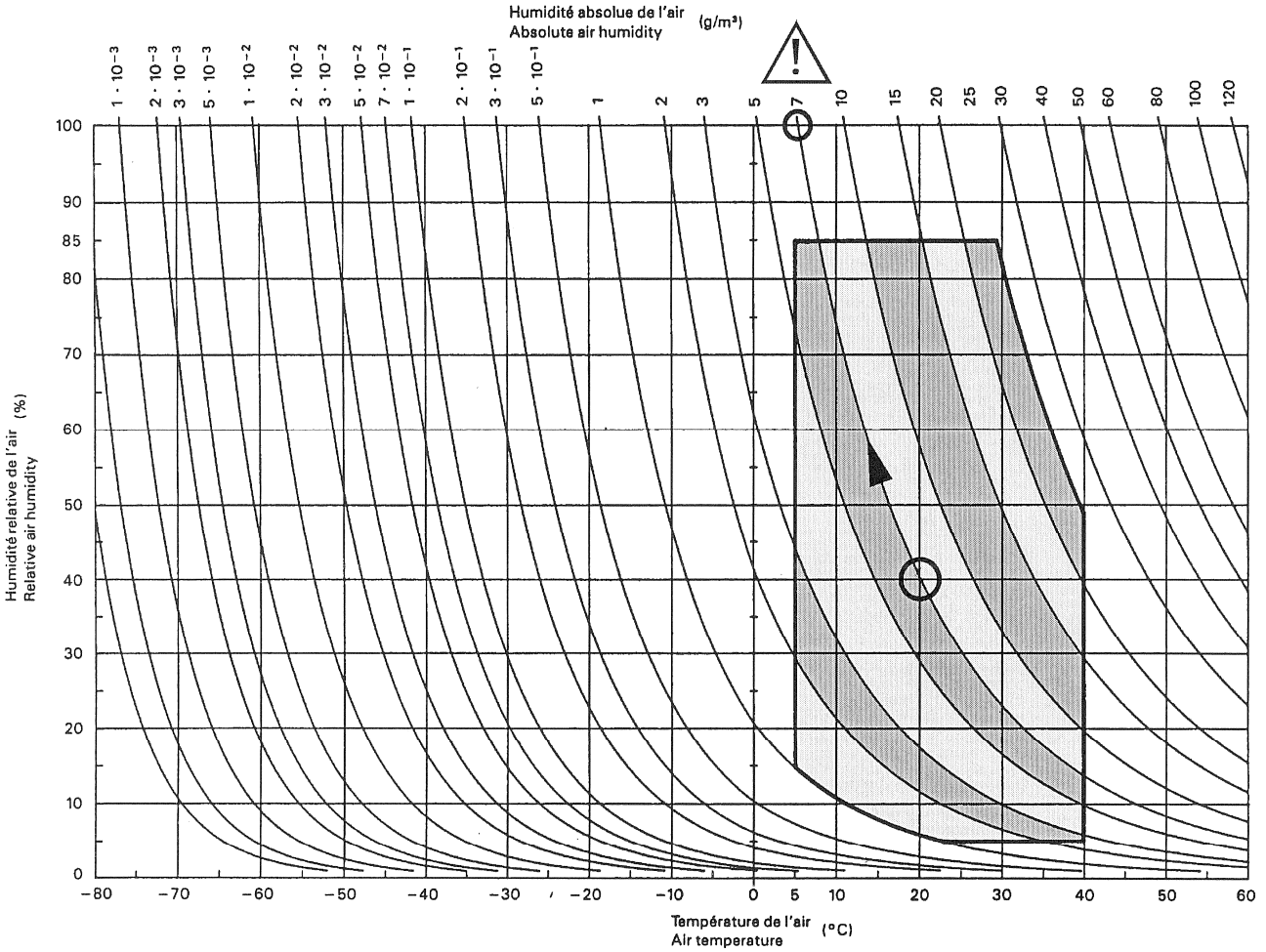

Figure B.3 – Climatogramme pour catégorie 3K3
Climatogram for class 3K3

721-3-3 © CEI:1994

Appendix 2: Mains Connector Strain Relief

For anchoring connectors without a mechanical lock (e.g. IEC mains connectors), we recommend the following arrangement:

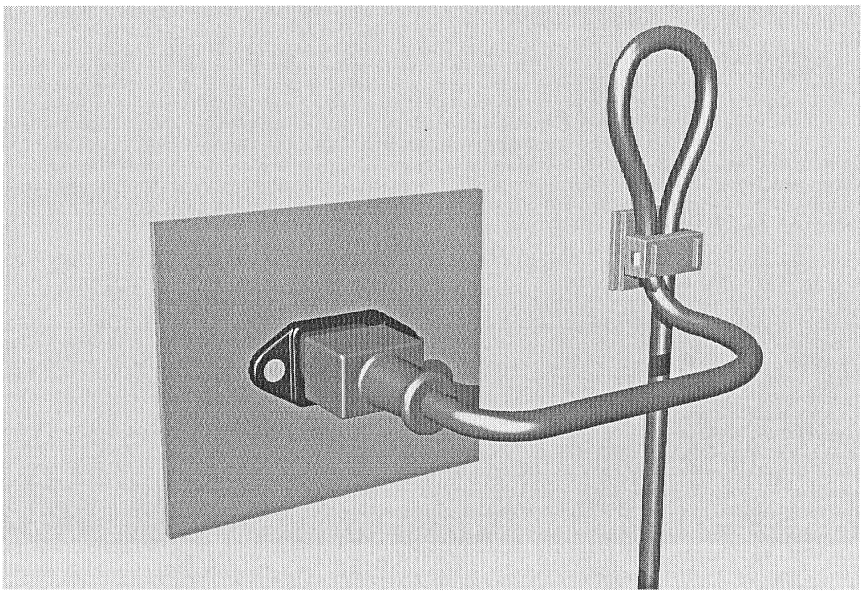

Procedure: The cable clamp shipped with your unit is auto-adhesive. For mounting please follow the rules below:

- The surface to be adhered to must be clean, dry, and free from grease, oil, or other contaminants. Recommended application temperature range is +20...+40 °C.
- Remove the plastic protective backing from the rear side of the clamp and apply it firmly to the surface at the desired position. Allow as much time as possible for curing. The bond continues to develop for as long as 24 hours.
- For improved stability, the clamp should be fixed with a screw. For this purpose, a self-tapping screw and an M4 bolt and nut are included.
- Place the cable into the clamp as shown in the illustration above and firmly press down the internal top cover until the cable is fixed.

Appendix 3: Software License

Use of the software is subject to the Studer Professional Audio Software License Agreement set forth below. Using the software indicates your acceptance of this license agreement. If you do not accept these license terms, you are not authorized to use this software.

Under the condition and within the scope of the following Terms and Conditions, Studer Professional Audio AG (hereinafter "Studer") grants the right to use programs developed by Studer as well as those of third parties which have been installed by Studer on or within its products. References to the license programs shall be references to the newest release of a license program installed at the Customer's site.

Programs Covered by the Agreement

License Programs of Studer

The following Terms and Conditions grant the right to use all programs of Studer that are part of the System and/or its options at the time of its delivery to the Customer, as well as the installation software on the original data disk and the accompanying documentation ("License Material"). In this Agreement the word "Programs" shall have the meaning of programs and data written in machine code.

Using the software indicates your acceptance of this license agreement. If you do not accept these license terms, you are not authorized to use this software.

Programs of Third Parties

Programs of third parties are all programs which constitute part of the System and/or its options at the time of delivery to the Customer but have not been developed by Studer. The following conditions are applicable to programs of third parties:

- The right to use third parties' programs is governed by the License Agreement attached hereto (if applicable), which is an integral part of this Agreement. The Customer shall sign any and all License Agreements for all further programs of third parties installed on the system. The Customer shall be deemed to have received all License Agreements upon delivery of the system and/or its options.
- Studer shall accept no responsibility or liability for, and gives no warranties (express or implied) as to the programs of third parties. The Customer waives any and all claims versus Studer for any consequential damages, which might occur due to defects of these programs.

Right of Use

Principle

Studer grants the Customer the non-exclusive right to use the License Material in one copy on the system and/or its options as laid down by the Sales Agreement concluded between the parties and all Terms and Conditions which shall be deemed to form and be read and construed as part of the Sales Agreement. This right is assignable according to the "Assignability" paragraph hereinafter.

Customized Configurations

The Customer is not entitled to alter or develop further the License Material except within the expressly permitted configuration possibilities given by the software installed on the system or elsewhere. All altered programs, including but not limited to the products altered within the permitted configuration possibilities, are covered by this License Agreement.

Reverse Engineering

Reverse engineering is only permitted with the express consent of Studer. The consent of Studer can be obtained but is not limited to the case in which the interface-software can not be provided by Studer. In any case Studer has to be informed immediately upon complete or partial reverse engineering.

Copying the License Material

The Customer is entitled to make one copy of all or parts of the License Material as is necessary for the use according to this Agreement, namely for backup purposes. The Customer shall apply the copyright of Studer found on the License Material onto all copies made by him. Records shall be kept by the Customer regarding the amount of copies made and their place of keeping. The responsibility for the original program and all copies made lies with the Customer. Studer is entitled to check these records on first request. Copies not needed anymore have to be destroyed immediately.

Disclosure of License Material

The License Material is a business secret of Studer. The Customer shall not hand out or in any way give access to parts or the complete License Material to third parties nor to publish any part of the License Material without prior written consent of Studer. The Customer shall protect the License Material and any copies made according to the paragraph above by appropriate defense measures against unauthorized access. This obligation of non-disclosure is a perpetual obligation.
Third parties are entitled to have access to the License Material if they use the License Material at the Customer's site in compliance with this Agreement.
Under no circumstance are third parties entitled to have access to the installation software on the original data media. The Customer shall safeguard the original data media accordingly.

Assignability

The rights granted to the Customer according to this License Agreement shall only be assignable to a third party together with the transfer of the system and/or its options and after the prior written consent of Studer.

Rights to License Material

With the exception of the right of use granted by this License Agreement all proprietary rights to the License Material, especially the ownership and the intellectual property rights (such as but not limited to patents and copyright) remain with Studer even if alterations, customized changes or amendments have been made to the License Material.
Studer's proprietary rights are acknowledged by the Customer. The Customer shall undertake no infringements and make no claims of any patent, registered design, copyright, trade mark or trade name, or other intellectual property right.

Warranty, Disclaimer, and Liability

For all issues not covered herewithin, refer to the "General Terms and Conditions of Sales and Delivery" being part of the sales contract.

Contents of Diagram Sections in Numerical Order

ESE = Electrostatically sensitive assembly

		GRP/ELM	Page
	Block diagram tape deck		6/1
	Block diagram master section peripherals		7/9
73.01.0125	LCD module	GRP52	7/49
1.021.697.00 ESE	Hall sensor		6/153
1.328.210.00	Serial remote control cabinet		9/37
1.328.211.23	Remote control driver board		9/41
1.328.212.00	Remote control display board		9/43
1.328.213.00	Stabilizer board		9/31
1.328.213.00	Stabilizer board		9/39
1.328.213.00	Stabilizer board		9/55
1.328.214.00	Shuttle board		9/45
1.328.220.00	Serial remote control module		9/37
1.328.230.00	Autolocator module		9/53
1.328.231.00	Pushbutton/display board		9/57
1.328.232.22	Driver board		9/59
1.328.233.00	Pushbutton board		9/61
1.328.233.81	Pushbutton board		9/63
1.328.240.00	Autolocator cabinet		9/53
1.328.245.00	Remote selector keyboard		9/49
1.328.246.00	Remote selector connectors board		9/51
1.328.248.00	Serial remote selector		9/47
1.328.250.00	with 15m connection cable		9/1
1.328.251.00	Tape deck remote control board		9/3
1.328.253.00	For installation into table cabinet (without cable)		9/11
1.328.255.00	Tape transport remote control module		9/5
1.328.256.00	Pushbutton board		9/7
1.328.257.00	Connector board		9/9
1.328.270.00	Serial remote counter		9/29
1.328.271.00	Timer display board		9/33
1.328.272.24	Timer driver board		9/35
1.328.275.00	Remote counter		9/23
1.328.276.20	CPU board		9/25
1.328.277.00	Display board		9/27
1.328.280.00	Vari-speed remote control (without cable)		9/15
1.328.281.00	Vari-speed display and keyboard		9/17
1.328.282.20	Vari-speed main board		9/19
1.328.283.00	Vari-speed connectors board		9/22
1.328.290.00	For installation into remote stand		9/11
1.328.501.00	Audio remote control module 8CH		9/65
1.328.503.00	Audio remote control module 24CH		9/65
1.328.504.81	Keyboard 24CH		9/77
1.328.505.00	Keyboard driver		9/79
1.328.510.81	Keyboard 8CH		9/75
1.810.762.82	Vari-speed control board		9/13
1.820.233.83	LC display unit	GRP52	7/47
1.820.240.00 ESE	Push button assembly	GRP48	7/37
1.820.250.00 ESE	Edit assembly	GRP49	7/43
1.820.350.00	Block diagram power supply	GRP1-12	6/2
1.820.350.00	Power supply	GRP1-12	6/3

1.820.350.81		Power supply	GRP1-12	6/5
1.820.350.82		Power supply	GRP1-12	6/7
1.820.353.00		Block diagram power supply	GRP1-11	6/13
1.820.353.81		Power supply	GRP1-11	6/15
1.820.353.82		Power supply	GRP1-11	6/17
1.820.504.81		Keyboard 24CH		9/73
1.820.695.81	ESE	Block diagram tacho sensor electronics	GRP38	6/147
1.820.695.81	ESE	Tacho sensor electronics	GRP38	6/149
1.820.695.83	ESE	Tacho sensor electronics	GRP38	6/151
1.820.702.00	ESE	Basis board audio control	GRP21	8/31
1.820.703.00	ESE	Basis board audio 4CH	ASY3/4/5/GRP1	8/43
1.820.704.00	ESE	Basis board TD	GRP20	6/63
1.820.704.81	ESE	Basis board TD	GRP20	6/65
1.820.705.00	ESE	Basis board VU-panel	ASY6/GRP1	8/127
1.820.705.00		Basis board VU-panel		9/69
1.820.706.00	ESE	DC-converter 5,6V	ASY6/GRP4	8/129
1.820.706.00		DC converter		9/67
1.820.707.00	ESE	Audio alignment keyboard	ASY6/GRP16	8/141
1.820.708.00	ESE	Control keyboard 8CH	ASY6/GRP9-11	8/137
1.820.709.00	ESE	Keyboard driver 8CH	ASY6/GRP5-7	8/135
1.820.710.00	ESE	Block diagram reproduce amplifier	ASY3/4/5/GRP1/2	8/83
1.820.710.00	ESE	Level diagram reproduce amplifier	ASY3/4/5/GRP1/2	8/84
1.820.710.83	ESE	Reproduce amplifier	ASY3/4/5/GRP1/2	8/85
1.820.710.84	ESE	Reproduce amplifier	ASY3/4/5/GRP1/2	8/87
1.820.710.85	ESE	Reproduce amplifier	ASY3/4/5/GRP1/2	8/89
1.820.714.00	ESE	Level diagram line amplifier	ASY3/4/5/GRP1/2	8/47
1.820.714.83	ESE	Line amplifier with transformer	ASY3/4/5/GRP1/2	8/49
1.820.714.84	ESE	Line amplifier with transformer	ASY3/4/5/GRP1/2	8/51
1.820.715.81	ESE	Line amplifier transformerless	ASY3/4/5/GRP1/2	8/57
1.820.715.82	ESE	Line amplifier transformerless	ASY3/4/5/GRP1/2	8/59
1.820.715.83	ESE	Line amplifier transformerless	ASY3/4/5/GRP1/2	8/61
1.820.716.00	ESE	Block diagram switching+metering unit	ASY3/4/5/GRP1/2	8/91
1.820.716.00	ESE	Switching+metering unit	ASY3/4/5/GRP1/2	8/93
1.820.717.00	ESE	Block diagram bus converter	ASY2/3/4/GRP1/2	8/39
1.820.717.00	ESE	Bus converter	ASY2/3/4/GRP1/2	8/41
1.820.718.00	ESE	Block diagram communications controller	GRP21/ELM20	8/7
1.820.718.00	ESE	Communications controller	GRP21/ELM20	8/9
1.820.718.81	ESE	Communications controller	GRP21/ELM20	8/11
1.820.718.82	ESE	Communications controller	GRP27/ELM20	8/13
1.820.723.00	ESE	Block diagram multichannel bus driver	GRP21/ELM24	8/27
1.820.723.00	ESE	Multichannel bus driver	GRP21/ELM24	8/29
1.820.725.00	ESE	Block diagram generator unit	GRP21/ELM22	8/15
1.820.725.00	ESE	Generator unit	GRP21/ELM22	8/17
1.820.725.81	ESE	Generator unit	GRP21/ELM22	8/19
1.820.727.00	ESE	Capstan interface	GRP20/ELM42	6/139
1.820.729.00	ESE	Block diagram serial remote interface	GRP26	7/25
1.820.729.24		Serial remote interface	GRP26	7/27
1.820.729.25		Serial remote interface	GRP26	7/29
1.820.736.00	ESE	Bargraph board 8CH	ASY6/GRP13-15	8/133
1.820.738.00	ESE	Block diagram parallel remote interface	GRP27	7/17
1.820.738.81	ESE	Parallel remote interface	GRP27	7/19
1.820.738.82		Parallel remote interface	GRP27	7/21
1.820.738.83	ESE	Parallel remote interface	GRP27	7/23
1.820.741.00		Adaptation board	ASY3/4/5/GRP1/2	8/71
1.820.751.00	ESE	Block diagram serial remote controller	GRP20/ELM50	7/11
1.820.751.21	ESE	Block diagram SMPTE/EBU-BUS interface	GRP20/ELM50	7/13
1.820.751.21	ESE	SMPTE/EBU-BUS interface	GRP20/ELM50	7/15

1.820.753.00 ESE ..... Block diagram master serial interface ..... GRP20/ELM48 ..... 7/3
1.820.753.82 ESE ..... Master serial interface ..... GRP20/ELM48 ..... 7/5
1.820.756.00 ESE ..... Master to audio interface ..... GRP20/ELM51 ..... 7/7
1.820.759.85 ESE ..... Block diagram spooling motor driver ..... GRP20/ELM40 ..... 6/117
1.820.759.85 ESE ..... Spooling motor driver ..... GRP20/ELM40 ..... 6/119
1.820.761.00 ESE ..... Block diagram TD counter/timer ..... GRP20/ELM44 ..... 6/91
1.820.761.81 ESE ..... TD counter/timer ..... GRP20/ELM44 ..... 6/93
1.820.762.00 ESE ..... Block diagram TD periphery control ..... GRP20/ELM43 ..... 6/77
1.820.762.00 ESE ..... TD periphery control ..... GRP20/ELM43 ..... 6/79
1.820.762.81 ESE ..... TD periphery control ..... GRP20/ELM43 ..... 6/81
1.820.763.00 ESE ..... Block diagram TD serial interface ..... GRP20/ELM47 ..... 6/71
1.820.763.82 ESE ..... TD serial interface ..... GRP20/ELM47 ..... 6/73
1.820.763.83 ESE ..... TD serial interface ..... GRP20/ELM47 ..... 6/75
1.820.764.22 ESE ..... Block diagram capstan control unit ..... GRP20/ELM41 ..... 6/135
1.820.764.22 ESE ..... Capstan control unit ..... GRP20/ELM41 ..... 6/137
1.820.765.00 ESE ..... Cue sensor ..... GRP49 ..... 7/43
1.820.766.00 ESE ..... TD indicator ..... GRP48 ..... 7/41
1.820.767.00 ESE ..... Push button display ..... GRP51 ..... 7/45
1.820.768.00 ESE ..... Block diagram TD display driver ..... GRP50 ..... 7/31
1.820.768.81 ..... TD display driver ..... GRP50 ..... 7/33
1.820.768.82 ESE ..... TD display driver ..... GRP50 ..... 7/35
1.820.769.00 ESE ..... TD push button assembly ..... GRP48 ..... 7/39
1.820.770.00 ESE ..... Move sensor ..... GRP45 ..... 6/97
1.820.770.82 ESE ..... Block diagram move sensor ..... GRP45 ..... 6/99
1.820.770.82 ESE ..... Move sensor ..... GRP45 ..... 6/101
1.820.771.81 ESE ..... Motor tacho ..... GRP36/37 ..... 6/103
1.820.771.83 ESE ..... Motor tacho ..... GRP36/37 ..... 6/105
1.820.772.81 ESE ..... Tape tension sensor ..... GRP42/43 ..... 6/115
1.820.773.00 ESE ..... Block diagram tape lifter control ..... GRP46/47 ..... 6/87
1.820.773.82 ESE ..... Tape lifter control ..... GRP46/47 ..... 6/89
1.820.774.24 ESE ..... Block diagram capstan motor drive amplifier ..... GRP39 ..... 6/141
1.820.774.24 ESE ..... Capstan motor drive amplifier ..... GRP39 ..... 6/143
1.820.774.25 ESE ..... Capstan motor drive amplifier ..... GRP39 ..... 6/145
1.820.776.00 ESE ..... Shuttle control ..... GRP49 ..... 7/43
1.820.778.82 ESE ..... Distribution board audio rack 8/45
1.820.781.20 ESE ..... Block diagram MPU TD-control ..... GRP20/ELM46 ..... 6/67
1.820.781.20 ESE ..... MPU TD-control ..... GRP20/ELM46 ..... 6/69
1.820.782.20 ESE ..... MPU audio control ..... GRP21/ELM21 ..... 8/5
1.820.783.20 ESE ..... MPU VU-panel ..... ASY6/GRP2 ..... 8/131
1.820.783.24 ..... MP unit VU-panel 9/71
1.820.784.20 ESE ..... MPU Master ..... GRP20/ELM49 ..... 7/1
1.820.791.00 ESE ..... Block diagram power fail detector ..... GRP14 ..... 6/9
1.820.791.00 ESE ..... Power fail detector ..... GRP14 ..... 6/11
1.820.793.XX ESE ..... Block diagram opto sensor ..... GRP44 ..... 6/83
1.820.793.82 ESE ..... Opto sensor ..... GRP44 ..... 6/85
1.820.795.00 ESE ..... Head assembly identifier board ..... ASY2/GRP1 ..... 8/125
1.820.797.82 ..... LCD connector ..... GRP52 ..... 7/49
1.820.802.00 ESE ..... Basis board audio control ..... GRP21 ..... 8/33
1.820.806.00 ESE ..... Basis board NRS SR/A ..... ASY3/4/5/GRP 8/107
1.820.807.00 ESE ..... Basis board NRS Telcom C4e ..... ASY3/4/5/GRP 8/109
1.820.808.81 ESE ..... Block diagram reproduce preamplifier 8/77
1.820.808.81 ESE ..... Reproduce preamplifier 8CH ..... ASY2/GRP2-4 ..... 8/79
1.820.808.82 ESE ..... Reproduce preamplifier 8CH ..... ASY2/GRP2-4 ..... 8/81
1.820.809.00 ESE ..... Basis board NRS SR/A/Telcom C4dm ..... GRP4 ..... 8/113
1.820.811.00 ESE ..... Level diagram record amplifier ..... ASY3/4/5/GRP1/2 ..... 8/69
1.820.811.00 ESE ..... Record amplifier HX-PRO ..... ASY3/4/5/GRP1/2 ..... 8/71
1.820.811.81 ESE ..... Record amplifier HX-PRO ..... ASY3/4/5/GRP1/2 ..... 8/73

1.820.813.81	ESE	HF-Driver HX-PRO	ASY3/4/5/GRP1/2	8/75
1.820.814.00	ESE	Line amplifier with transformer	ASY3/4/5/GRP1/2	8/53
1.820.815.00	ESE	Block diagram internal NRS controller	ASY3/4/5/GRP1/2	8/95
1.820.815.00	ESE	Internal NRS controller	ASY3/4/5/GRP1/2	8/97
1.820.816.00	ESE	Block diagram external NRS controller	GRP21/ELM23	8/35
1.820.816.00	ESE	External NRS controller	GRP21/ELM23	8/37
1.820.817.00	ESE	Master keyboard	ASY6/GRP12	8/139
1.820.820.00	ESE	Block diagram time code line amplifier	ASY3/4/5	8/117
1.820.820.81	ESE	Time code line amplifier	ASY3/4/5	8/119
1.820.820.82	ESE	Time code line amplifier	ASY3/4/5	8/121
1.820.821.00	ESE	Time code read unit	ASY3/4/5	8/123
1.820.822.00	ESE	Block diagram spooling motor control	GRP20/ELM45	6/111
1.820.822.00	ESE	Spooling motor control	GRP20/ELM45	6/113
1.820.823.00	ESE	TD counter/timer	GRP20/ELM44	6/95
1.820.824.00	ESE	Block diagram internal NRS controller SR/A	ASY3/4/5/GRP1/2	8/101
1.820.824.00	ESE	Internal NRS controller SR/A	ASY3/4/5/GRP1/2	8/103
1.820.825.00	ESE	Block diagram generator unit	GRP21/ELM22	8/21
1.820.825.00	ESE	Generator unit	GRP21/ELM22	8/23
1.820.826.00	ESE	Test generator board	GRP21/ELM22	8/25
1.820.830.81	ESE	Main soft start board	GRP3	6/19
1.820.831.00	ESE	Block diagram pinch roller gate	GRP60	6/107
1.820.831.81	ESE	Pinch roller gate	GRP60	6/109
1.820.861.00	ESE	Time counter control	GRP 28	6/155
1.820.862.00	ESE	Line output amplifer	ASY3/4/5/GRP1/2	8/63
1.820.863.00		Line input connection board	ASY2/GRP11	8/65
1.820.864.00		Line input connection board	ASY2/GRP11	8/67
1.820.865.00		Distribution board TD	GRP35	6/61
1.820.865.81		Distribution board TD	GRP35	6/62
1.820.866.00	ESE	Block diagram fuse/supply failure detector	GRP59	6/21
1.820.866.00	ESE	Fuse/supply faiture detector	GRP59	6/23
1.820.867.00	ESE	Metering board	ASY3/4/5/GRP1/2	8/10
1.820.869.00	ESE	Block diagram power fail sense board	GRP23	6/131
1.820.869.00	ESE	Power fail sense board	GRP23	6/133
1.820.871.00	ESE	Stabilizer ± 15V, 24V	GRP31	6/25
1.820.871.81	ESE	Block diagram stabilizer ±15V, 24V	GRP31	6/29
1.820.871.81	ESE	Stabilizer ± 15V, 24V	GRP31	6/31
1.820.872.00	ESE	Stabilizer ± 26V, 5,6V, 24V	GRP32	6/35
1.820.872.8X	ESE	Stabilizer ± 26V, 5,6V, 24V	GRP32	6/45
1.820.872.81	ESE	Block diagram stabilizer ± 26V, 5,6V, 24V	GRP32	6/39
1.820.872.81	ESE	Stabilizer ± 26V, 5,6V, 24V	GRP32	6/41
1.820.872.83	ESE	Stabilizer ± 26V, 5,6V, 24V	GRP32	6/49
1.820.873.00	ESE	Block diagram stabilizer ± 15V, 24V	GRP31	6/53
1.820.873.00	ESE	Stabilizer ± 15V, 24V	GRP31	6/55
1.820.873.81	ESE	Stabilizer ± 15V, 24V	GRP31	6/59
1.820.875.00	ESE	Block diagram spooling motor drive amplifier	GRP30/33	6/121
1.820.875.00	ESE	Spooling motor drive amplifier	GRP30/33	6/123
1.820.875.81	ESE	Spooling motor drive amplifier	GRP30/33	6/125
1.820.875.82	ESE	Spooling motor drive amplifier	GRP30/33	6/127
20.820.366.00		PARALLEL TAPE DECK REMOTE CONTROL CABINET		9/1
20.820.367.00		PARALLEL TAPE DECK REMOTE CONTROL MODULE		9/5
20.820.368.00		SERIAL REMOTE COUNTER		9/29
20.820.369.00		SERIAL REMOTE CONTROL CABINET		9/37
20.820.370.00		SERIAL REMOTE CONTROL MODULE		9/37
21.328.230.00		AUTOLOCATOR MODULE		9/53
21.328.240.00		AUTOLOCATOR CABINET		9/53
21.328.248.00		SERIAL REMOTE SELECTOR		9/47
21.328.253.00		VARI-SPEED CONTROLLER UNIT		9/11

21.328.275.00 ..... REMOTE COUNTER (RS 232) 9/23
21.328.290.00 ..... VARI-SPEED CONTROLLER UNIT 9/11
21.328.501.00 ..... AUDIO REMOTE CONTROL 8CH 9/65
21.328.503.00 ..... AUDIO REMOTE CONTROL 24CH 9/65

5 Signal Wire List

5.1.1 Groups 5/1
5.1.2 Elements, Points 5/1
5.1.3 Main Connection Types 5/2
5.1.4 Wire Labeling, Color Scheme 5/3
5.1.5 Explanations to LOCATION PIN LIST 5/4
5.1.6 Explanations to SIGNAL WIRE LIST 5/5
Location Pin List 5/9
Signal Wire List 5/93

5 Signal Wire List

Wiring diagrams for equipment with complex electronic circuitry are difficult to follow and can lead to misinterpretations. Our documentation is, therefore, based on computer-generated wiring lists. They give complete information on each electrical connection within the equipment.
To make the documentation more understandable, the power supply, the controls, the tape transport control, and the audio section habe been split into groups (GRP) and the groups into elements (ELM) and connecting points (PNT).
The signals are referred to by names that have been constructed from various abbreviations and from which the corresponding function can be recognized.

5.1 Groups

The electrical hardware of the A820 MCH tape recorder is subdivided into groups (GRP01...GRP71). These groups are interconnected by cables and connectors that are identified with the corresponding group number. The group arrangement and the main interconnections are listed in the survey of groups (fold-out pages on the left) and the block diagram (at the beginning of the diagrams section).

5.2 Elements, Points

Groups that comprise multiple PCBs or other elements are subdivided into elements (ELM). The connecting points (PNT) are located ont the elements.

5.3 Main Connection Types:

Typ	Description	STUDER No.
	Connector, D-type, crimp:	
A	Contact pin, for thin stranded wire	54.02.0451
AA	Contact pin, for heavy stranded wire	54.02.0455
B	Contact socket, for thin stranded wire	54.02.0450
BB	Contact socket, for heavy stranded wire	54.02.0454
	CIS connector:	
C	Contact socket	54.01.0402
D	Contact pin	54.01.0401
	MOLEX connector:	
F	Contact socket, for thin stranded wire	54.02.0412
FF	Contact socket, for heavy stranded wire	54.02.0413
G	Solder hook	29.21.6002
H	Wire/stranded wire, tinned (6 mm)	--.--.----
I	Connector, D-type, crimp, contact pin	54.02.1112
	Flat connector, AMP FASTON, crimp, 0.8 x 6.3 mm:	
JM	Contact, female, for thin stranded wire	54.02.0337
J	Contact, female, for heavy stranded wire	54.02.0332
JJ	Contact, fem., for very heavy stranded w	54.02.0338
K	Wire/stranded wire, stripped 8 mm, tinned 1 mm	--.--.----
L	Wire/stranded wire, tinned 4 mm	--.--.----
M	MOLEX contact pin, for thin stranded wire	54.02.0411
MM	MOLEX contact pin, for heavy stranded w.	54.02.0410
MY	AMP flat connector (blade)	54.02.0344
N	CIS connector, contact pin	54.01.0225
O	Contact spring to EURO card conn. strip	54.01.0376
	PCB contact strip:	
P	Contact strip, for thin stranded wire	54.06.4512
PP	Contact strip, for heavy stranded wire	54.06.4510
Q	Socket strip, contact socket	54.01.0451
R	Connector, D-type, crimp, contact socket	54.02.1111
S	Wire/stranded wire, stripped 4 mm/tinned	--.--.----
T	TERMI-POINT connector on WIRE WRAP post	--.--.----
U	Detent-spring solder contact, crimp	54.03.0201
UU	Detent-spring solder contact, crimp	54.34.6002
V	Contact, female, for heavy stranded wire	54.02.0432
VV	Contact, female, for thin stranded wire	54.02.0474
W	Wrapped	--.--.----
	Flat connector AMP FASTON, crimp, 0.5 x 2.8 mm:	
X	Contact, female, for thin stranded wire	54.02.0325
XX	Contact, female, for heavy stranded wire	54.02.0329
	Flat connector AMP FASTON, crimp, 0.8 x 2.8 mm	
Y	Contact, female, for thin stranded wire	54.02.0326
YY	Contact, female, for heavy stranded wire	54.02.0327
Z	Not tinned	--.--.----

5.4 Wire Labeling, Color Scheme

The most important leads of the wiring are labeled. Three numbers can be found on the end of each wire: these specify the corresponding group, the element, and the connecting point.
The flat cable connectors carry labels indicating:

- Numbers of group and element where the connector itself is to be inserted.
- Either the name of the group where the connector at the opposite end of the cable is to be connected, or
  The name of the group where the connector iself is to be inserted.

Examples:

- CAPSTAN MOTOR DRIVE AMPLIFIER, GRP39, MOLEX socket ELM03. Wire colors at the matching connector (GRP20, ELM71) yel and red, wires printed 20-71-1 and 20-71-6. That means that the red wire is connected to pin No. 6 of the MOLEX connector.
  The other end of the red wire is marked 20-62-6, i.e. it is connected to the point No. 6 of the wire field ELM62 on group BASIS PCB TAPE DECK, GRP20.
- The flat cable connector plugged to BASIS PCB TAPE DECK GRP20 ELM14 (connection to the FUSE/SUPPLY FAILURE DETECTOR PCB) is labeled as follows:

```
GR.20  EL.14
TO FUSE/SUPP
FAILURE DET.
```

  The connector at the other end of the flat cable is marked with the following tag:

```
GR.59  EL.01
FUSE/SUPPLY
FAILURE DET.
```

Color scheme

0	black	(blk)
1	brown	(brn)
2	red	(red)
3	orange	(org)
4	yellow	(yel)
5	green	(grn)
6	blue	(blu)
7	violet	(vio)
8	grey	(gry)
9	white	(wht)
-	uncolored	(unc)

5.5 Explanations to LOCATION PIN LIST

This list is arranged by group number. If the group number or group designation is known, further information can be found by consulting this list.
If only the signal name is known, consult the SIGNAL WIRE LIST (refer to 5.6).

Example: (refer to LOCATION PIN LIST page 5/38)

```
GRP 39        1.820.774.00                    <--- GROUP
=========================================
              <--  <--  <--    CONTINUATION
ELM  3                                        <--- ELEMENT
      FROM GRP20, ELM71 (BASIS B. TD)  P03
-----------------------------------------
PNT     SIGNAL NAME COLOR LV TYPE        F
-----------------------------------------
 1      0STABIN              M
 2
 3
 4
 5
 6      +STABIN3             M
-----------------------------------------
 |          |                |
 |          |                |
 |          |                |
```

5.6 Explanations to SIGNAL WIRE LIST

This list is arranged in alphabetic order by signal name (the signal names of the neutrals and the supply voltages are located at the top of the list). If the signal name is known, further information can be obtained by consulting this list. If only the group designation or the group number are known, consult the LOCATION PIN LIST (refer to 5.5).
The signal names are listed in the first column (SIGNAL NAME). The wire color can be found in the second column (COLOR). The fourth column specifies groups, elements, and connecting points on which the signal concerned is available (GRP ELM PNT). This column is arranged in numerical order by group number, it does not give any information on the way of the signal through the recorder.
Example (refer to SIGNAL WIRE LIST page 5/119)

```
*****************************************************************************************************************************
*    WILLI STUDER AG    *    S I G N A L     W I R E     L I S T                    * 89/07/20  *  9:25  *  P A G E  53   *
*****************************************************************************************************************************
*                       * TAPE TRANSPORT & AUDIO MCH *                             * 89/04/19 - 00                          *
*****************************************************************************************************************************

SIGNAL NAME   COLOR  MI  ASY GRP ELM PNT  S  LV  TYPE            DESCRIPTION OF ELEMENT                    REMARK     ELEMENT NR.
-----------   -----  --  ---------------  -  --  --------------  ----------------------------------------  ---------  ----------------
<<-- CONT.OF  2          1  35  10   1          U               WIRE FIELD
+STABIN2      2          1  35  10   2          L               WIRE FIELD
              2          1  35  10   3          L               WIRE FIELD
              2          1  35  10   4          L               WIRE FIELD
              2          1  35  54   3          AX              TO GRP31, ELM03                    P05
              2          1  35  54   4          AX              TO GRP31, ELM03                    P05
              2          1  35  58   3          AX              FROM ASY07, GRP11, ELM01           P09
              2          1  35  59  18          M               TO GRP20, ELM70                    P10
                         1  59   1   5                          FROM GRP20, ELM14 (BASIS B. TD)    P01
              2          7  10   2   2          J               FUSE                               F02                51.01.0125
              2          7  11   1   3          BX                                                 J02                54.25.0310
-----------   -----  --  ---------------  -  --  --------------  ----------------------------------------  ---------  ----------------
+STABIN3                 1  20  14   1                          FUSE FAILURE DETECTOR              P14
                         1  20  14   2                          FUSE FAILURE DETECTOR              P14
              2          1  20  62   6          L               WIRE FIELD
              2          1  20  62   7          L               WIRE FIELD
              2          1  20  70  24          F               FROM GRP35, ELM59                  J13
              2          1  20  71   6          F               TO CAPSTAN MOTOR DRIVE AMPLIFIER   P24
                         1  32   3   2          BX              DC INPUT (GRP35, ELM56)            P03
              2          1  35   7   1          U               WIRE FIELD
              2          1  35   7   2          L               WIRE FIELD
              2          1  35   7   3          L               WIRE FIELD
                         1  35   7   4                          WIRE FIELD
                         1  35   7   5                          WIRE FIELD
                         1  35   7   6                          WIRE FIELD
                         1  35   7   7                          WIRE FIELD
                         1  35   7   8                          WIRE FIELD
              2          1  35  56   2          AX              TO GRP32, ELM03                    P07
              2          1  35  58   5          AX              FROM ASY07, GRP11, ELM01           P09
              2          1  35  59  24          M               TO GRP20, ELM70                    P10
                         1  39   3   6          M               FROM GRP20, ELM71 (BASIS B. TD)    P03
                         1  59   1   1                          FROM GRP20, ELM14 (BASIS B. TD)    P01
                         1  59   1   2                          FROM GRP20, ELM14 (BASIS B. TD)    P01
              2          7  10   3   2          J               FUSE                               F03                51.01.0229
              2          7  11   1   5          BX                                                 J02                54.25.0310
-----------   -----  --  ---------------  -  --  --------------  ----------------------------------------  ---------  ----------------
+STABIN4                 1  20  16   5                          PARALLEL REMOTE INTERFACE          P16
                         1  20  16   6                          PARALLEL REMOTE INTERFACE          P16
              8          1  20  62  10          L               WIRE FIELD
              8          1  20  70  16          F               FROM GRP35, ELM59                  J13
              2          1  24   7   4          L               VU METER PANEL EXTERNAL
              2          1  24   7   5          L               VU METER PANEL EXTERNAL
              2          1  24   7   6          L               VU METER PANEL EXTERNAL
                         1  25   1   9          B               CONN. AUTOLOCATOR, REMOTE TIMER    J01
                         1  26   1   3                          FROM PAR. REM. IF                  P01
                         1  26   2   8                          TO GRP25, ELM01 (REMOTE PANEL)     P02
                         1  27   1   3                          TO GRP26, ELM01 (SERIAL REM. IF)   P01
                         1  27   2   5                          FROM GRP20, ELM16 (BASIS BOARD)    P02
                         1  27   2   6                          FROM GRP20, ELM16 (BASIS BOARD)    P02
              2          1  35   3   1          U               WIRE FIELD
              2          1  35   3   2          U               WIRE FIELD
              2          1  35   3   3          U               WIRE FIELD
              2          1  35   3   4          U               WIRE FIELD
              2          1  35   3   5          U               WIRE FIELD
```

Signal name: +STABIN3

Color: 2 (red) or none (flat cable)

Connection type: M (MOLEX contact pin for thin stranded wire), or F (MOLEX contact socket for thin stranded wire, or L (soldered directly to a PCB)

Part of the signal path:

GRP	ELM	PNT	
11	03	03	Rectifier bridge, "+" connection point, soldered. From here, a red wire leads to the
12	04	01	Smooting capacitor, "+" connection point, soldered. In addition, a
12	05	07	Wire harness with MOLEX connector leads on to the
32	01	07	MOLEX socket on the SWITCHING STABILIZER. The signal is looped through to the
32	02	24	MOLEX plug on the SWITCHING STABILIZER, there the
19	01	24	Wire harness with MOLEX socket is inserted.
19	02	24	MOLEX plug at the other end of the wire harness is connected to
21	02	24	MOLEX socket on the BASIS PCB AUDIO. Here, the signal is looped through to the
21	01	24	MOLEX plug on the BASIS PCB AUDIO, where the
20	70	24	Wire harness with MOLEX socket is plugged in. The other end of the wire harness is soldered to the
20	62	06	Wire field on the BASIS PCB TAPE DECK, the signal is looped through to the
*20	62	07	Wire field on the BASIS PCB TAPE DECK. At the other end of the wire harness that is soldered here to the PCB there is a
20	71	06	MOLEX socket, plugged to the
39	03	06	MOLEX socket on the CAPSTAN MOTOR DRIVE AMPLIFIER

* Here the signal is branched out. This is shown by the group number appearing more than two times in the SIGNAL WIRE LIST.

```
 ******   *******   *     *   ******    *******   ******                  *         *   *****   ******    *****   *     *    *****
*          *      *     *   *     *   *          *     *                 *         *   *     *  *     *   *     *  **    *   *     *
*          *      *     *   *     *   *          *     *                 *         *   *     *  *     *   *     *  * *   *   *
 *****     *      *     *   *     *   *****      ******      *******     *    *    *   *     *  ******    *     *  *  *  *    *****
      *    *      *     *   *     *   *          *   *                    *  *  *  *   *     *  *   *     *     *  *   * *         *
      *    *      *     *   *     *   *          *    *                    * * * *    *     *  *    *    *     *  *    **   *     *
******     *       *****    ******    *******   *     *                    *   *     *****   *     *   *****   *     *    *****
```

```
**********************************************************************************************************************************************************
*                                                                                                                                                        *
*  PART NUMBER:                    *   *   T A P E   T R A N S P O R T   &   A U D I O   M C H   *                    *    INDEX: 00    *
*                                  *                                                                                  *                 *
**********************************************************************************************************************************************************
```

P A G E 1 O F 171

S U M M A R Y

DATE OF ORIGIN: 89/04/19
DATE OF PROC. : 89/07/20

ASSEMBLYS	7		
GROUPS	91		
ELEMENTS	700		
PINS (TOTAL)	12317	(UNUSED PINS	902)
MULTIPLE PINS	0		
CODING KEYS	283		
SIGNALS	0	(UNUSED SIGNALS	0)

RECORDS READ 13402

GROUP NODE = *
INTER GROUP NODE = #
DIRECT WIRE TO # = <
WIRING NOT COMPUTED = @

OPTIONS SPECIFIED : ELMSUM, LOCLIS, ALLCOL, WIRALL

OPTIONS USED : ELMSUM, LOCLIS, ALLCOL, WIRALL

LISTINGS GENERATED :	PAGE	ERR	WRN
GROUP SUMMARY	2	0	0
ELEMENT SUMMARY	4	0	0
LOCATION PIN LIST	23	0	0

===>> NO PUNCH GENERATED <<===

****

```
**********************************************************************************************************************************************************
*   WILLI STUDER AG   *   G R O U P   S U M M A R Y                    *  89/07/20  *  8:15  *  P A G E  2  *
**********************************************************************************************************************************************************
*                     * TAPE TRANSPORT & AUDIO MCH *                    *  89/04/19 - 00                                                              *
**********************************************************************************************************************************************************
```

ASY	GRP	PART NUMBER	DESCRIPTION	UNUSED PINS	USED PINS	TOT.PINS	MULT.PINS	CDG.KEYS	TOT.ELM	REM
1	20	1.820.704.00	BASIS BOARD TAPE DECK	115	943	1058	0	8	43	
1	21	1.820.702.00	BASIS BOARD AUDIO CONTROL	97	420	517	0	3	21	
1	22	1.820.802.00	BASIS BOARD AUDIO CTR. + BACK UP GP.	105	538	643	0	6	27	
1	23	1.820.322.00	SYNC.-CONNECTION PANEL MK1/MK2	26	94	120	0	1	15	
1	24		AUDIO REMOTE CONTROL PANEL	9	38	47	0	6	7	
1	25		REMOTE CONTROL PANEL	2	72	74	0	3	5	
1	26	1.820.729.00	SERIAL REMOTE INTERFACE	4	35	39	0	1	3	
1	27	1.820.738.00	PARALLEL REMOTE INTERFACE	3	118	121	0	2	6	
1	28	1.820.861.00	TIMER CONTROL BOARD	0	34	34	0	0	3	
1	29	1.820.869.00	POWER FAIL SENSE BOARD	0	40	40	0	0	6	
1	30	1.820.875.00	SPOOLING MOTOR DRIVE AMPLIFIER RIGHT	1	23	24	0	0	4	
1	31	1.820.871.00	SWITCHING STABILIZER +15.0 / -15.0	2	20	22	0	0	3	
1	32	1.820.872.00	SWITCHING STABILIZER + 5.6	1	21	22	0	0	3	
1	33	1.820.875.00	SPOOLING MOTOR DRIVE AMPLIFIER LEFT	1	23	24	0	0	4	
1	34		GROUND CONNECTION	0	1	1	0	0	1	
1	35	1.820.865.00	DISTRIBUTION BOARD TAPE DECK	21	298	319	0	0	39	
1	36	1.820.192.00	SPOOLING MOTOR ASSEMBLY, LEFT	1	11	12	0	0	2	
1	37	1.820.192.00	SPOOLING MOTOR ASSEMBLY, RIGHT	1	11	12	0	0	2	
1	38	1.021.695.00	CAPSTAN MOTOR (ELECTRONICS BOARD)	13	15	28	0	0	5	
1	39	1.820.774.00	CAPSTAN MOTOR DRIVE AMPLIFIER	4	30	34	0	0	3	
1	40	1.080.230.00	BRAKE ASSEMBLY, LEFT	1	2	3	0	0	1	
1	41	1.080.240.00	BRAKE ASSEMBLY, RIGHT	1	2	3	0	0	1	
1	42	1.820.772.00	TAPE TENSION SENSOR, LEFT	3	7	10	0	0	1	
1	43	1.820.772.00	TAPE TENSION SENSOR, RIGHT	3	7	10	0	0	1	
1	44	1.820.793.00	OPTO + EXTENDED SENSORS	0	10	10	0	0	1	
1	45	1.820.770.00	MOVE SENSOR	1	9	10	0	0	1	
1	46	1.820.773.00	TAPE LIFTER CONTROL, LEFT	5	11	16	0	0	1	
1	47	1.820.773.00	TAPE LIFTER CONTROL, RIGHT	5	11	16	0	0	1	
1	48	1.820.240.00	PUSHBUTTON ASSEMBLY	4	42	46	0	0	3	
1	49	1.820.250.00	EDIT ASSEMBLY	1	14	15	0	0	2	
1	50	1.820.768.00	TAPE DECK DISPLAY DRIVER	3	119	122	0	0	4	
1	51	1.820.767.00	COMMAND UNIT	1	39	40	0	0	1	
1	52	1.820.233.00	LCD DISPLAY UNIT	0	16	16	0	0	1	
1	53	1.820.718.82	COMMUNICATIONS CONTROLLER, FRONT	4	5	9	0	0	1	
1	59	1.820.866.00	FUSE/SUPPLY FAILURE DETECTOR	1	15	16	0	0	1	
1	60	1.820.831.00	PINCH ROLLER GATE	16	76	92	0	0	8	
2	1	1.050.152.00	HEAD BLOCK ASSEMBLY (24 CH)	35	215	250	0	0	10	
2	2	1.820.808.00	PREAMPLIFIER, CH 01 TO 08	0	50	50	0	0	2	
2	3	1.820.808.00	PREAMPLIFIER, CH 09 TO 16	0	50	50	0	0	2	
2	4	1.820.808.00	PREAMPLIFIER, CH 17 TO 24	0	50	50	0	0	2	
2	5		GROUND CONNECTION	0	4	4	0	0	1	
3	1	1.820.703.00	BASISBOARD, CH 01 TO 04	21	1060	1081	0	36	43	
3	2	1.820.703.00	BASISBOARD, CH 05 TO 08	21	1060	1081	0	36	43	
3	3	1.820.778.00	DISTRIBUTION BOARD AUDIO RACK	2	43	45	0	1	5	
3	4	1.820.809.00	BASISBOARD, NRS OPTION CH 01 TO 08	39	97	136	0	10	17	
3	11	1.820.863.00	LINE INPUTS, CH 01 TO 08	0	49	49	0	0	9	
3	14	1.820.864.00	LINE OUTPUTS, CH 01 TO 08	0	49	49	0	0	9	
4	1	1.820.703.00	BASISBOARD, CH 09 TO 12	21	1060	1081	0	36	43	

WILLI STUDER AG * G R O U P S U M M A R Y * 89/07/20 * 8:15 * P A G E 3 *

* TAPE TRANSPORT & AUDIO MCH * * 89/04/19 - 00 *

ASY	GRP	PART NUMBER	DESCRIPTION	UNUSED PINS	USED PINS	TOT.PINS	MULT.PINS	COD.KEYS	TOT.ELM	REM
4	2	1.820.703.00	BASISBOARD, CH 13 TO 16	21	1060	1081	0	36	43	
4	3	1.820.778.00	DISTRIBUTION BOARD AUDIO RACK	6	39	45	0	1	5	
4	4	1.820.809.00	BASISBOARD, NRS OPTION CH 09 TO 16	24	112	136	0	10	17	
4	11	1.820.863.00	LINE INPUTS, CH 09 TO 16	0	49	49	0	0	9	
4	14	1.820.864.00	LINE OUTPUTS, CH 09 TO 16	0	49	49	0	0	9	
5	1	1.820.703.00	BASISBOARD, CH 17 TO 20	21	1060	1081	0	36	43	
5	2	1.820.703.00	BASISBOARD, CH 21 TO 24	21	1060	1081	0	36	43	
5	3	1.820.778.00	DISTRIBUTION BOARD AUDIO RACK	6	39	45	0	1	5	
5	4	1.820.809.00	BASISBOARD, NRS OPTION CH 17 TO 24	24	112	136	0	10	17	
5	11	1.820.863.00	LINE INPUTS, CH 17 TO 24	0	49	49	0	0	9	
5	14	1.820.864.00	LINE OUTPUTS, CH 17 TO 24	0	49	49	0	0	9	
6	1	1.820.705.00	BASIS BOARD VU PANEL	12	166	178	0	2	8	
6	2	1.820.783.00	MPU VU PANEL MCH	2	36	38	0	1	1	
6	3		SERVICE BOARD	2	36	38	0	1	1	
6	4	1.820.706.00	DC CONVERTER 5.6 V	0	8	8	0	0	2	
6	5	1.820.709.00	KEYBOARD DRIVER, CH 01 TO 08	1	55	56	0	0	2	
6	6	1.820.709.00	KEYBOARD DRIVER, CH 09 TO 16	1	55	56	0	0	2	
6	7	1.820.709.00	KEYBOARD DRIVER, CH 17 TO 24	1	55	56	0	0	2	
6	8	1.820.709.00	KEYBOARD DRIVER, MASTER	3	53	56	0	0	2	
6	9	1.820.708.00	CH CONTROL KEYBOARD, CH 01 TO 08	1	29	30	0	0	1	
6	10	1.820.708.00	CH CONTROL KEYBOARD, CH 09 TO 16	1	29	30	0	0	1	
6	11	1.820.708.00	CH CONTROL KEYBOARD, CH 17 TO 24	1	29	30	0	0	1	
6	12	1.820.817.00	MASTER KEYBOARD	1	29	30	0	0	1	
6	13	1.820.736.00	BARGRAPHS BOARD, CH 01 TO 08	0	26	26	0	0	1	
6	14	1.820.736.00	BARGRAPHS BOARD, CH 09 TO 16	0	26	26	0	0	1	
6	15	1.820.736.00	BARGRAPHS BOARD, CH 17 TO 24	0	26	26	0	0	1	
6	16	1.820.707.00	ALIGNMENT KEYBOARD	2	24	26	0	0	1	
6	17	1.820.891.00	SUPPLY CABLE, DC CONVERTOR	0	12	12	0	0	3	
6	52	1.820.233.00	DISPLAY (LCD)	0	16	16	0	0	1	
7	1		POWER INPUT / OUTPUT	0	6	6	0	0	2	
7	2	55.17.5003	POWER SWITCH	6	0	6	0	0	2	
7	3		VOLTAGE SELECTOR	8	0	8	0	0	2	
7	4	1.820.351.00	MAIN TRANSFORMER	6	0	6	0	0	3	
7	5	1.820.351.00	MAIN TRANSFORMER	6	0	6	0	0	3	
7	6	1.820.530.00	FILTER COIL	8	0	8	0	0	2	
7	7	1.820.530.00	FILTER COIL	8	0	8	0	0	2	
7	8		RECTIFIERS	8	8	16	0	0	4	
7	9		CAPACITOR UNIT	12	31	43	0	0	10	
7	10		FUSES (SECONDARY)	0	8	8	0	0	4	
7	11		CONNECTOR DC OUTPUT	1	9	10	0	0	1	
7	12		DISTRIBUTOR	92	0	92	0	0	5	
7	13		GROUND CONNECTION	0	2	2	0	0	1	
7	14	1.820.791.00	POWER FAIL DETECTOR	2	6	8	0	0	1	
			DISTRIBUTED IN 91 GRP TOTAL :	902	11415	12317	0	283	700	

WILLI STUDER AG * E L E M E N T S U M M A R Y * 89/07/20 * 8:15 * P A G E 4 *

* TAPE TRANSPORT & AUDIO MCH * * 89/04/19 - 00 *

ASY 1 TAPE DECK

GRP	ELM	PART NUMBER	DESCRIPTION		UNUSED PINS	USED PINS	TOT.PINS	MULT.PINS	COD.KEYS	REMARK
20	1		SPOOLING M. DRIVE AMP. LEFT	P01	0	16	16	0	0	
20	2		SPOOLING M. DRIVE AMP. RIGHT	P02	0	16	16	0	0	
20	3		CAPSTAN M. DRIVE AMPLIFIER	P03	0	16	16	0	0	
20	4		PAR. CONT. INT. SYNCHRONIZER	P04	1	15	16	0	0	
20	6		OPTO + EXTENDED SENSORS	P06	0	10	10	0	0	
20	7		TAPE LIFT MOTOR, LEFT	P07	5	11	16	0	0	
20	8		TAPE LIFT MOTOR, RIGHT	P08	5	11	16	0	0	
20	9		TACHO SENSOR SPOOLING M. LEFT	P09	1	9	10	0	0	
20	10		TACHO SENSOR SPOOLING M. RIGHT	P10	1	9	10	0	0	
20	11		MOVE SENSOR	P11	1	9	10	0	0	
20	12		TAPE TENSION SENSOR, LEFT	P12	3	7	10	0	0	
20	13		TAPE TENSION SENSOR, RIGHT	P13	3	7	10	0	0	
20	14		FUSE FAILURE DETECTOR	P14	1	15	16	0	0	
20	15		DISPLAY DRIVER	P15	0	40	40	0	0	
20	16		PARALLEL REMOTE INTERFACE	P16	0	40	40	0	0	
20	17		TO HEAD BLOCK ASSEMBLY	P17	5	21	26	0	0	
20	18		RESERVE	P18	4	22	26	0	0	
20	19		MECHANICAL ELAPSED TIMER	P19	0	16	16	0	0	
20	30		SSDA INT. SYNCHRONIZER	P20	2	8	10	0	0	
20	31		TO SMPTE/EBU CONNECTOR	P21	1	9	10	0	0	
20	32		BASIS BOARD AUDIO CONT. ELM15	P24	0	26	26	0	0	
20	33		BASIS BOARD AUDIO CONT. ELM16	P25	10	16	26	0	0	
20	34		INT. SYNCHRONIZER		0	40	40	0	0	
20	40	1.820.759.00	SPOOLING MOTOR DRIVER	J01	9	29	38	0	1	
20	41	1.820.764.00	CAPSTAN CONTROL UNIT	J02	2	36	38	0	1	
20	42	1.820.727.00	CAPSTAN INTERFACE	J03	6	58	64	0	0	
20	43	1.820.762.00	TAPE DECK PERIPHERY CONTR.	J04	10	54	64	0	0	
20	44	1.820.761.00	TAPE DECK COUNTER / TIMER	J05	4	34	38	0	1	
20	45	1.820.822.00	SPOOLING MOTOR CONTROLLER	J06	13	25	38	0	1	
20	46	1.820.781.00	MP-UNIT TD CONTROL MCH	J07	2	36	38	0	1	
20	47	1.820.763.00	TAPE DECK SERIAL INTERFACE	J08	0	38	38	0	1	
20	48	1.820.753.00	MASTER SERIAL INTERFACE	J09	0	64	64	0	0	
20	49	1.820.784.00	MP-UNIT MASTER MCH	J10	0	38	38	0	1	
20	50	1.820.751.00	SMPTE/EBU INTERFACE	J11	0	38	38	0	1	
20	51	1.820.756.00	MASTER TO AUDIO INTERFACE	J12	20	44	64	0	0	
20	60		WIRE FIELD (FROM GRP20, ELM70)		0	3	3	0	0	
20	61		WIRE FIELD (FROM GRP20, ELM70)		0	10	10	0	0	
20	62		WIRE FIELD		0	15	15	0	0	
20	63		WIRE FIELD (TO BRAKE SOLENOIDS)		0	2	2	0	0	
20	70		FROM GRP35, ELM59	J13	0	24	24	0	0	
20	71		TO CAPSTAN MOTOR DRIVE AMPLIFIER	P24	4	2	6	0	0	
20	72		TO BRAKE SOLENOID, LEFT	P25	1	2	3	0	0	
20	73		TO BRAKE SOLENOID, RIGHT	P26	1	2	3	0	0	
21	1		CONNECTOR STUDIOBUS	J02	0	3	3	0	0	
21	2		CONNECTOR STUDIOBUS	J03	0	3	3	0	0	
21	3		CONNECTOR STUDIOBUS	J04	0	3	3	0	0	
21	4			P01	0	1	1	0	0	
21	5			P02	0	1	1	0	0	
21	6			P03	0	1	1	0	0	

* WILLI STUDER AG * E L E M E N T S U M M A R Y * 89/07/20 * 8:15 * P A G E 5 *

* * TAPE TRANSPORT & AUDIO MCH * * 89/04/19 - 00 *

ASY 1 TAPE DECK <-- <-- <-- CONTINUATION

GRP	ELM	PART NUMBER	DESCRIPTION		UNUSED PINS	USED PINS	TOT.PINS	MULT.PINS	COD.KEYS	REMARK
21	7			P04	0	1	1	0	0	
21	8		FROM GRP35, ELM61	J01	3	7	10	0	0	
21	10		TO GRP24, ELM03	P05	6	10	16	0	0	
21	11		TO GRP24, ELM02	P06	6	10	16	0	0	
21	12		TO GRP24, ELM01	P07	6	10	16	0	0	
21	15		TAPE DECK BASIS BOARD, ELM32	P08	0	26	26	0	0	
21	16		TAPE DECK BASIS BOARD, ELM33	P09	10	16	26	0	0	
21	20	1.820.718.00	COMMUNICATIONS CONTROLLER	J05	0	38	38	0	1	
21	21	1.820.782.00	MPU AUDIO CONTROL MCH	J06	3	35	38	0	1	
21	22	1.820.725.00	GENERATOR UNIT MCH	J07	17	21	38	0	1	
21	23	1.820.816.00	CONTROLLER EXTERNAL NRS	J08	21	43	64	0	0	
21	24	1.820.723.00	BUS DRIVER MCH	J09	25	71	96	0	0	
21	50		TO AUDIO RACK CH 1 TO 8	P10	0	40	40	0	0	
21	51		TO AUDIO RACK CH 9 TO 16	P11	0	40	40	0	0	
21	52		TO AUDIO RACK CH 17 TO 24	P12	0	40	40	0	0	
22	1		CONNECTOR STUDIOBUS	J02	0	3	3	0	0	
22	2		CONNECTOR STUDIOBUS	J03	0	3	3	0	0	
22	3		CONNECTOR STUDIOBUS	J04	0	3	3	0	0	
22	4			P01	0	1	1	0	0	
22	5			P02	0	1	1	0	0	
22	6			P03	0	1	1	0	0	
22	7			P04	0	1	1	0	0	
22	8		FROM GRP35, ELM61	J01	3	7	10	0	0	
22	9		POWER SUPPLY FLOPPY TD	J11	0	4	4	0	0	
22	10		TO GRP24, ELM03	P05	6	10	16	0	0	
22	11		TO GRP24, ELM02	P06	6	10	16	0	0	
22	12		TO GRP24, ELM01	P07	6	10	16	0	0	
22	15		TAPE DECK BASIS BOARD, ELM32	P08	0	26	26	0	0	
22	16		TAPE DECK BASIS BOARD, ELM33	P09	10	16	26	0	0	
22	17			P14	0	8	8	0	1	
22	18			P15	0	8	8	0	1	
22	19			P16	0	8	8	0	1	
22	20	1.820.718.00	COMMUNICATIONS CONTROLLER	J05	0	38	38	0	1	
22	21	1.820.782.00	MPU AUDIO CONTROL MCH	J06	3	35	38	0	1	
22	22	1.820.725.00	GENERATOR UNIT MCH	J07	7	31	38	0	1	
22	23	1.820.816.00	CONTROLLER EXTERNAL NRS	J08	18	46	64	0	0	
22	24	1.820.723.00	BUS DRIVER MCH	J09	25	71	96	0	0	
22	25	1.820.726.00	FLOPPY DISK CONTROLLER	J10	20	44	64	0	0	
22	26	1.820.000.00	FLOPPY DISK CONNECTOR	P13	1	33	34	0	0	
22	50		TO AUDIO RACK CH 1 TO 8	P10	0	40	40	0	0	
22	51		TO AUDIO RACK CH 9 TO 16	P11	0	40	40	0	0	
22	52		TO AUDIO RACK CH 17 TO 24	P12	0	40	40	0	0	
23	1		BICODE/PILOT	J01	0	5	5	0	0	
23	2		SLAVE TC OUT	J02	0	3	3	0	0	
23	3		SLAVE TC IN	J03	0	3	3	0	0	
23	4		TC IN/PILOT	J04	0	3	3	0	0	
23	5		BICODE	J05	0	5	5	0	0	
23	6		MASTER TC OUT	P01	0	3	3	0	0	

* WILLI STUDER AG * E L E M E N T S U M M A R Y * 89/07/20 * 8:15 * P A G E 6 *

* * TAPE TRANSPORT & AUDIO MCH * * 89/04/19 - 00 *

ASY 1 TAPE DECK <-- <-- <-- CONTINUATION

GRP	ELM	PART NUMBER	DESCRIPTION		UNUSED PINS	USED PINS	TOT.PINS	MULT.PINS	COD.KEYS	REMARK
23	7		MASTER TC IN	J06	0	3	3	0	0	
23	8		CONN. PARALLEL REMOTE CONTROL	J07	0	24	24	0	1	
23	9		LOCAL CONTROL UNIT	J08	1	14	15	0	0	
23	10		SERIAL REMOTE	J09	0	9	9	0	0	
23	11		SERIAL REMOTE	J10	0	9	9	0	0	
23	12		MASTER TALLIES	J11	0	9	9	0	0	
23	13		COMP. VIDEO IN	J12	0	2	2	0	0	
23	14		COMP. VIDEO IN	J13	0	2	2	0	0	
23	15		SLAVE CONTROLL B	J14	25	0	25	0	0	
24	1		NRS CONTROL CONN. CH 17 TO 24		3	10	13	0	2	
24	2		NRS CONTROL CONN. CH 9 TO 16		3	10	13	0	2	
24	3		NRS CONTROL CONN. CH 1 TO 8		3	10	13	0	2	
24	4				0	0	0	0	0	
24	5				0	0	0	0	0	
24	6				0	0	0	0	0	
24	7		VU METER PANEL EXTERNAL		0	8	8	0	0	
25	1		CONN. AUTOLOCATOR, REMOTE TIMER	J01	2	6	8	0	1	
25	2		CONNECTOR SYNCHRONIZER CONTROL	J02	0	24	24	0	1	
25	3		CONN. PARALLEL REMOTE CONTROL	J03	0	24	24	0	1	
25	4		CONNECTOR SMPTE/EBU BUS	J04	0	9	9	0	0	
25	5		CONNECTOR SMPTE/EBU BUS	J05	0	9	9	0	0	
26	1		FROM PAR. REM. IF	P01	0	26	26	0	0	
26	2		TO GRP25, ELM01 (REMOTE PANEL)	P02	3	6	9	0	1	
26	3		TO PAR. REM. IF	J01	1	3	4	0	0	
27	1		TO GRP26, ELM01 (SERIAL REM. IF)	P01	0	26	26	0	0	
27	2		FROM GRP20, ELM16 (BASIS BOARD)	P02	0	40	40	0	0	
27	3		TO GRP25, ELM02 (SYNCHRONIZER)	P03	1	24	25	0	1	
27	4		TO CONN. PARALLEL REMOTE CONTR.	P04	1	24	25	0	1	
27	5			P05	0	1	1	0	0	
27	6	54.99.0213		P05	1	3	4	0	0	
28	1		FROM B. BOARD TAPE DECK, ELM 19	P01	0	16	16	0	0	
28	2		TO VU-METER PANEL	P02	0	16	16	0	0	
28	3		TO MECHANICAL TIMER	P03	0	2	2	0	0	
29	1		FROM SP. M. DRIVE AMPL. RIGHT	J01	0	2	2	0	0	
29	2		TC SPOOLING MOTOR RIGHT	J02	0	2	2	0	0	
29	3		FROM SP. M. DRIVE AMPL. LEFT	J03	0	2	2	0	0	
29	4		TO SPOOLING MOTOR LEFT	J04	0	2	2	0	0	
29	5		FROM GRP20, ELM02 (BASIS B. TD)	P01	0	16	16	0	0	
29	6		TO SPOOLING M. DRIVE AMP. RIGHT	P02	0	16	16	0	0	
30	1		SUPPLY INPUT	J03	1	3	4	0	0	
30	2		FROM GRP29, ELM06	P01	0	16	16	0	0	
30	3		OUTPUT (MOTOR RIGHT)	J01	0	2	2	0	0	
30	4		OUTPUT (MOTOR LEFT)	J02	0	2	2	0	0	

* WILLI STUDER AG * E L E M E N T S U M M A R Y * 89/07/20 * 8:15 * P A G E 7 *

* * TAPE TRANSPORT & AUDIO MCH * * 89/04/19 - 00 *

ASY 1 TAPE DECK <-- <-- <-- CONTINUATION

GRP	ELM	PART NUMBER	DESCRIPTION		UNUSED PINS	USED PINS	TOT.PINS	MULT.PINS	COD.KEYS	REMARK
31	1		FROM DISTRIBUTION BOARD (ELM20)	P01	2	8	10	0	0	
31	2		DC OUTPUT (GRP35, ELM53)	P02	0	8	8	0	0	
31	3		DC INPUT (GRP35, ELM54)	P03	0	4	4	0	0	
32	1		FROM DISTRIBUTION BOARD (ELM21)	P01	0	10	10	0	0	
32	2		DC OUTPUT (GRP35, ELM55)	P02	1	9	10	0	0	
32	3		DC INPUT (GRP35, ELM56)	P03	0	2	2	0	0	
33	1		SUPPLY INPUT	J03	1	3	4	0	0	
33	2		FROM GRP20, ELM01 (BASIS B. TD)	P01	0	16	16	0	0	
33	3		OUTPUT (MOTOR RIGHT)	J01	0	2	2	0	0	
33	4		OUTPUT (MOTOR LEFT)	J02	0	2	2	0	0	
34	1		GROUND CONNECTION	P01	0	1	1	0	0	
35	1		WIRE FIELD		0	55	55	0	0	
35	2		WIRE FIELD		0	6	6	0	0	
35	3		WIRE FIELD		0	14	14	0	0	
35	4		WIRE FIELD		0	4	4	0	0	
35	5		WIRE FIELD		0	4	4	0	0	
35	6		WIRE FIELD		0	4	4	0	0	
35	7		WIRE FIELD		0	8	8	0	0	
35	8		WIRE FIELD		0	6	6	0	0	
35	9		WIRE FIELD		0	6	6	0	0	
35	10		WIRE FIELD		0	4	4	0	0	
35	11		WIRE FIELD		0	4	4	0	0	
35	12		WIRE FIELD		0	2	2	0	0	
35	13		WIRE FIELD		0	2	2	0	0	
35	14		WIRE FIELD		0	6	6	0	0	
35	15		WIRE FIELD		0	6	6	0	0	
35	16		WIRE FIELD		0	9	9	0	0	
35	17		WIRE FIELD		0	9	9	0	0	
35	18		WIRE FIELD		0	12	12	0	0	
35	20		TO GRP31, ELM01	P01	2	8	10	0	0	
35	21		TO GRP32, ELM01	P02	2	8	10	0	0	
35	22		AUDIO RACK CH 1 TO 8	J01	3	7	10	0	0	
35	23		AUDIO RACK CH 9 TO 16	J02	3	7	10	0	0	
35	24		AUDIO RACK CH 17 TO 24	J03	3	7	10	0	0	
35	25		WIRE FIELD		0	4	4	0	0	
35	26		WIRE FIELD		0	4	4	0	0	
35	27		WIRE FIELD		0	4	4	0	0	
35	50		CONNECTOR TO VU METER PANEL	J04	0	8	8	0	0	
35	51		CONN. TO VU METER PANEL EXTERNAL	J05	0	8	8	0	0	
35	52		FROM GRP30, ELM01	P03	1	3	4	0	0	
35	53		FROM GRP31, ELM02	P04	0	8	8	0	0	
35	54		TO GRP31, ELM03	P05	0	4	4	0	0	
35	55		FROM GRP32, ELM02	P06	1	9	10	0	0	
35	56		TO GRP32, ELM03	P07	0	2	2	0	0	
35	57		TO GRP33, ELM01	P08	1	3	4	0	0	
35	58		FROM ASY07, GRP11, ELM01	P09	1	9	10	0	0	

* WILLI STUDER AG * E L E M E N T S U M M A R Y * 89/07/20 * 8:15 * P A G E 8 *

* * TAPE TRANSPORT & AUDIO MCH * * 89/04/19 - 00 *

ASY 1 TAPE DECK <-- <-- <-- CONTINUATION

GRP	ELM	PART NUMBER	DESCRIPTION		UNUSED PINS	USED PINS	TOT.PINS	MULT.PINS	COD.KEYS	REMARK
35	59		TO GRP20, ELM70	P10	0	24	24	0	0	
35	60		FROM GRP21, ELM01	P11	1	2	3	0	0	
35	61		TO GRP21, ELM08	P12	3	7	10	0	0	
35	62		TO GRP34, ELM01	J06	0	1	1	0	0	
36	1	1.820.771.00	TACHO SENSOR	P01	1	9	10	0	0	
36	2		FROM GRP33, ELM 03	P02	0	2	2	0	0	
37	1	1.820.771.00	TACHO SENSOR	P01	1	9	10	0	0	
37	2		FROM GRP30, ELM 03	P02	0	2	2	0	0	
38	1		FROM GRP39, ELM02	J01	1	11	12	0	0	
38	2	1.021.696.00	TACHO SENSOR UNIT (WIRE FIELD)		4	0	4	0	0	
38	3	1.021.697.00	HALL SENSOR BOARD (WIRE FIELD)		8	0	8	0	0	
38	4		STATOR (WIRE FIELD)		0	3	3	0	0	
38	5		GROUND CONNECTION (WIRE FIELD)		0	1	1	0	0	
39	1		FROM GRP20, ELM03 (BASIS B. TD)	P01	0	16	16	0	0	
39	2		TO GRP38, ELM01 (CAPSTAN MOTOR)	P02	0	12	12	0	0	
39	3		FROM GRP20, ELM71 (BASIS B. TD)	P03	4	2	6	0	0	
40	1		BRAKE SOLENOID		1	2	3	0	0	
41	1		BRAKE SOLENOID		1	2	3	0	0	
42	1		FROM GRP20, ELM12 (BASIS B. TD)	P01	3	7	10	0	0	
43	1		FROM GRP20, ELM13 (BASIS B. TD)	P01	3	7	10	0	0	
44	1		FROM GRP20, ELM06	P01	0	10	10	0	0	
45	1		FROM GRP20, ELM11	P01	1	9	10	0	0	
46	1		FROM GRP20, ELM07	P01	5	11	16	0	0	
47	1		FROM GRP20, ELM08 (BASIS B. TD)	P01	5	11	16	0	0	
48	1		FROM GRP50, ELM03 (DISPLAY DRIVER)		2	24	26	0	0	
48	2		CONNECTOR EDIT ASSEMBLY		0	10	10	0	0	
48	3		WIRE FIELD		2	8	10	0	0	
49	1		FROM GRP48, ELM02 (PUSHBUTTON BOARD)		0	10	10	0	0	
49	2		WIRE FIELD		1	4	5	0	0	
50	1		FROM GRP20, ELM15 (BASIS B. TD)	P01	0	40	40	0	0	
50	2		CONNECTOR PUSHBUTTON ASSEMBLY	P03	1	39	40	0	0	
50	3		CONNECTOR COMMAND UNIT	P02	2	24	26	0	0	
50	4		CONNECTOR LCD DISPLAY UNIT	P04	0	16	16	0	0	
51	1		FROM GRP50,ELM02 (DISPLAY DRIVER)		1	39	40	0	0	

WILLI STUDER AG — E L E M E N T S U M M A R Y — 89/07/20 — 8:15 — P A G E 9

* TAPE TRANSPORT & AUDIO MCH * — 89/04/19 - 00

ASY 1 TAPE DECK <-- <-- <-- CONTINUATION

GRP	ELM	PART NUMBER	DESCRIPTION		UNUSED PINS	USED PINS	TOT.PINS	MULT.PINS	COD.KEYS	REMARK
52	1		FROM GRP50, ELM04 (DISPLAY DRIVER)		0	16	16	0	0	
53	1		CONNECTOR DATA BACK UP, FRONT P.	J01	4	5	9	0	0	
59	1		FROM GRP20, ELM14 (BASIS B. TD)	P01	1	15	16	0	0	
60	1		FROM GR. 20 ELM 08	P01	5	11	16	0	0	
60	2		FROM GR. 20 ELM 11	P02	1	9	10	0	0	
60	3		FROM GR. 20 ELM 10	P03	1	9	10	0	0	
60	4		FROM GR. 20 ELM 09	P04	1	9	10	0	0	
60	5		TO TAPE LIFT MOTOR, RIGHT	P05	5	11	16	0	0	
60	6		TO MOVE SENSOR	P06	1	9	10	0	0	
60	7		TO TACHO SENSOR SP. MOTOR RIGHT	P07	1	9	10	0	0	
60	8		TO TACHO SENSOR SP. MOTOR LEFT	P08	1	9	10	0	0	
			DISTRIBUTED IN 231 ELM	TOTAL :	455	3170	3625	0	30	

WILLI STUDER AG — E L E M E N T S U M M A R Y — 89/07/20 — 8:15 — P A G E 10

* TAPE TRANSPORT & AUDIO MCH * — 89/04/19 - 00

ASY 2 HEAD BLOCK, PREAMPLIFIER, LINE

GRP	ELM	PART NUMBER	DESCRIPTION		UNUSED PINS	USED PINS	TOT.PINS	MULT.PINS	COD.KEYS	REMARK
1	1		ERASE HEAD, CH 01 TO 08	P01	1	24	25	0	0	
1	2		ERASE HEAD, CH 09 TO 16	P02	1	24	25	0	0	
1	3		ERASE HEAD, CH 17 TO 24	P03	1	24	25	0	0	
1	4		RECORD HEAD, CH 01 TO 08	P04	9	16	25	0	0	
1	5		RECORD HEAD, CH 09 TO 16	P05	9	16	25	0	0	
1	6		RECORD HEAD, CH 17 TO 24	P06	9	16	25	0	0	
1	7		REPRODUCE HEAD, CH 01 TO 08	P07	0	25	25	0	0	
1	8		REPRODUCE HEAD, CH 09 TO 16	P08	0	25	25	0	0	
1	9		REPRODUCE HEAD, CH 17 TO 24	P09	0	25	25	0	0	
1	10	1.820.795.00	HEAD BLOCK IDENTIFIER	P10	5	20	25	0	0	
2	1		INPUT	J01	0	25	25	0	0	
2	2		OUTPUT	P01	0	25	25	0	0	
3	1		INPUT	J01	0	25	25	0	0	
3	2		OUTPUT	P01	0	25	25	0	0	
4	1		INPUT	J01	0	25	25	0	0	
4	2		OUTPUT	P01	0	25	25	0	0	
5	1				0	4	4	0	0	
			DISTRIBUTED IN 17 ELM	TOTAL :	35	369	404	0	0	

WILLI STUDER AG — E L E M E N T S U M M A R Y — 89/07/20 — 8:15 — P A G E 11

* TAPE TRANSPORT & AUDIO MCH * — 89/04/19 - 00

ASY 3 AUDIO ELECTRONICS, CH 01 TO 08

GRP	ELM	PART NUMBER	DESCRIPTION		UNUSED PINS	USED PINS	TOT.PINS	MULT.PINS	COD.KEYS	REMARK
1	1	1.820.715.00	LINE AMPLIFIER, CH 1	J01	0	38	38	0	1	
1	2	1.820.815.00	CONTROLLER INTERNAL NRS CH 1	J02	2	62	64	0	0	
1	3	1.820.710.00	REPRODUCE AMPLIFIER, CH 1	J03	0	38	38	0	1	
1	4	1.820.811.00	RECORD AMPLIFIER, CH 1	J04	0	38	38	0	1	
1	5	1.820.813.00	HF-DRIVER, CH 1	J05	1	37	38	0	1	
1	6	1.820.715.00	LINE AMPLIFIER, CH 2	J06	0	38	38	0	1	
1	7	1.820.815.00	CONTROLLER INTERNAL NRS CH 2	J07	2	62	64	0	0	
1	8	1.820.710.00	REPRODUCE AMPLIFIER, CH 2	J08	0	38	38	0	1	
1	9	1.820.811.00	RECORD AMPLIFIER, CH 2	J09	0	38	38	0	1	
1	10	1.820.813.00	HF-DRIVER, CH 2	J10	1	37	38	0	1	
1	11	1.820.715.00	LINE AMPLIFIER, CH 3	J11	0	38	38	0	1	
1	12	1.820.815.00	CONTROLLER INTERNAL NRS CH 3	J12	2	62	64	0	0	
1	13	1.820.710.00	REPRODUCE AMPLIFIER, CH 3	J13	0	38	38	0	1	
1	14	1.820.811.00	RECORD AMPLIFIER, CH 3	J14	0	38	38	0	1	
1	15	1.820.813.00	HF-DRIVER, CH 3	J15	1	37	38	0	1	
1	16	1.820.715.00	LINE AMPLIFIER, CH 4	J16	0	38	38	0	1	
1	17	1.820.815.00	CONTROLLER INTERNAL NRS CH 4	J17	2	62	64	0	0	
1	18	1.820.710.00	REPRODUCE AMPLIFIER, CH 4	J18	0	38	38	0	1	
1	19	1.820.811.00	RECORD AMPLIFIER, CH 4	J19	0	38	38	0	1	
1	20	1.820.813.00	HF-DRIVER, CH 4	J20	1	37	38	0	1	
1	21	1.820.717.00	BUS CONVERTER	J21	9	55	64	0	0	
1	31		LINE INPUT/OUTPUT, CH 1	J22	0	6	6	0	1	
1	32		NOISE REDUCTION, CH 1	J23	0	12	12	0	1	
1	33		REPRODUCE PREAMPLIFIER, CH 1	J24	0	3	3	0	1	
1	34		RECORD HEAD, CH 1	J25	0	3	3	0	1	
1	35		ERASE HEAD, CH 1	J26	0	3	3	0	1	
1	36		LINE INPUT/OUTPUT, CH 2	J27	0	6	6	0	1	
1	37		NOISE REDUCTION, CH 2	J28	0	12	12	0	1	
1	38		REPRODUCE PREAMPLIFIER, CH 2	J29	0	3	3	0	1	
1	39		RECORD HEAD, CH 2	J30	0	3	3	0	1	
1	40		ERASE HEAD, CH 2	J31	0	3	3	0	1	
1	41		LINE INPUT/OUTPUT, CH 3	J32	0	6	6	0	1	
1	42		NOISE REDUCTION, CH 3	J33	0	12	12	0	1	
1	43		REPRODUCE PREAMPLIFIER, CH 3	J34	0	3	3	0	1	
1	44		RECORD HEAD, CH 3	J35	0	3	3	0	1	
1	45		ERASE HEAD, CH 3	J36	0	3	3	0	1	
1	46		LINE INPUT/OUTPUT, CH 4	J37	0	6	6	0	1	
1	47		NOISE REDUCTION, CH 4	J38	0	12	12	0	1	
1	48		REPRODUCE PREAMPLIFIER, CH 4	J39	0	3	3	0	1	
1	49		RECORD HEAD, CH 4	J40	0	3	3	0	1	
1	50		ERASE HEAD, CH 4	J41	0	3	3	0	1	
1	60		JUMPER SWITCH	JS01	0	5	5	0	0	
1	70			P01	0	40	40	0	0	
2	1	1.820.715.00	LINE AMPLIFIER, CH 5	J01	0	38	38	0	1	
2	2	1.820.815.00	CONTROLLER INTERNAL NRS CH 5	J02	2	62	64	0	0	
2	3	1.820.710.00	REPRODUCE AMPLIFIER, CH 5	J03	0	38	38	0	1	
2	4	1.820.811.00	RECORD AMPLIFIER, CH 5	J04	0	38	38	0	1	
2	5	1.820.813.00	HF-DRIVER, CH 5	J05	1	37	38	0	1	
2	6	1.820.715.00	LINE AMPLIFIER, CH 6	J06	0	38	38	0	1	

WILLI STUDER AG * E L E M E N T S U M M A R Y * 89/07/20 * 8:15 * P A G E 12

* TAPE TRANSPORT & AUDIO MCH * * 89/04/19 - 00

ASY 3 AUDIO ELECTRONICS, CH 01 TO 08 <-- <-- <-- CONTINUATION

GRP	ELM	PART NUMBER	DESCRIPTION		UNUSED PINS	USED PINS	TOT.PINS	MULT.PINS	COD.KEYS	REMARK
2	7	1.820.815.00	CONTROLLER INTERNAL NRS CH 6	J07	2	62	64	0	0	
2	8	1.820.710.00	REPRODUCE AMPLIFIER, CH 6	J08	0	38	38	0	1	
2	9	1.820.811.00	RECORD AMPLIFIER, CH 6	J09	0	38	38	0	1	
2	10	1.820.813.00	HF-DRIVER, CH 6	J10	1	37	38	0	1	
2	11	1.820.715.00	LINE AMPLIFIER, CH 7	J11	0	38	38	0	1	
2	12	1.820.815.00	CONTROLLER INTERNAL NRS CH 7	J12	2	62	64	0	0	
2	13	1.820.710.00	REPRODUCE AMPLIFIER, CH 7	J13	0	38	38	0	1	
2	14	1.820.811.00	RECORD AMPLIFIER, CH 7	J14	0	38	38	0	1	
2	15	1.820.813.00	HF-DRIVER, CH 7	J15	1	37	38	0	1	
2	16	1.820.715.00	LINE AMPLIFIER, CH 8	J16	0	38	38	0	1	
2	17	1.820.815.00	CONTROLLER INTERNAL NRS CH 8	J17	2	62	64	0	0	
2	18	1.820.710.00	REPRODUCE AMPLIFIER, CH 8	J18	0	38	38	0	1	
2	19	1.820.811.00	RECORD AMPLIFIER, CH 8	J19	0	38	38	0	1	
2	20	1.820.813.00	HF-DRIVER, CH 8	J20	1	37	38	0	1	
2	21	1.820.717.00	BUS CONVERTER	J21	9	55	64	0	0	
2	31		LINE INPUT/OUTPUT, CH 5	J22	0	6	6	0	1	
2	32		NOISE REDUCTION, CH 5	J23	0	12	12	0	1	
2	33		REPRODUCE PREAMPLIFIER, CH 5	J24	0	3	3	0	1	
2	34		RECORD HEAD, CH 5	J25	0	3	3	0	1	
2	35		ERASE HEAD, CH 5	J26	0	3	3	0	1	
2	36		LINE INPUT/OUTPUT, CH 6	J27	0	6	6	0	1	
2	37		NOISE REDUCTION, CH 6	J28	0	12	12	0	1	
2	38		REPRODUCE PREAMPLIFIER, CH 6	J29	0	3	3	0	1	
2	39		RECORD HEAD, CH 6	J30	0	3	3	0	1	
2	40		ERASE HEAD, CH 6	J31	0	3	3	0	1	
2	41		LINE INPUT/OUTPUT, CH 7	J32	0	6	6	0	1	
2	42		NOISE REDUCTION, CH 7	J33	0	12	12	0	1	
2	43		REPRODUCE PREAMPLIFIER, CH 7	J34	0	3	3	0	1	
2	44		RECORD HEAD, CH 7	J35	0	3	3	0	1	
2	45		ERASE HEAD, CH 7	J36	0	3	3	0	1	
2	46		LINE INPUT/OUTPUT, CH 8	J37	0	6	6	0	1	
2	47		NOISE REDUCTION, CH 8	J38	0	12	12	0	1	
2	48		REPRODUCE PREAMPLIFIER, CH 8	J39	0	3	3	0	1	
2	49		RECORD HEAD, CH 8	J40	0	3	3	0	1	
2	50		ERASE HEAD, CH 8	J41	0	3	3	0	1	
2	60		JUMPER SWITCH	JS01	0	5	5	0	0	
2	70			P01	0	40	40	0	0	
3	1		SUPPLY PREAMPLIFIER CH 1 TO 8	J01	0	5	5	0	1	
3	2		SUPPLY ASY03, GRP01	J02	0	10	10	0	0	
3	3		SUPPLY ASY03, GRP02	J03	0	10	10	0	0	
3	4		SUPPLY CONNECTOR	J04	2	8	10	0	0	
3	5		SUPPLY ASY03, GRP04 (NRS OPTION)	J05	0	10	10	0	0	
4	1		NOISE REDUCTION UNIT CH 1	J11	23	7	30	0	2	
4	2		NOISE REDUCTION UNIT CH 2	J21	0	0	0	0	0	
4	3		NOISE REDUCTION UNIT CH 3	J31	0	0	0	0	0	
4	4		NOISE REDUCTION UNIT CH 4	J41	0	0	0	0	0	
4	5		NOISE REDUCTION UNIT CH 5	J51	0	0	0	0	0	
4	6		NOISE REDUCTION UNIT CH 6	J61	0	0	0	0	0	

WILLI STUDER AG * E L E M E N T S U M M A R Y * 89/07/20 * 8:15 * P A G E 13

* TAPE TRANSPORT & AUDIO MCH * * 89/04/19 - 00

ASY 3 AUDIO ELECTRONICS, CH 01 TO 08 <-- <-- <-- CONTINUATION

GRP	ELM	PART NUMBER	DESCRIPTION		UNUSED PINS	USED PINS	TOT.PINS	MULT.PINS	COD.KEYS	REMARK
4	7		NOISE REDUCTION UNIT CH 7	J71	0	0	0	0	0	
4	8		NOISE REDUCTION UNIT CH 8	J81	0	0	0	0	0	
4	10		TO GRP03, ELM05	P10	0	10	10	0	0	
4	11		TO GRP01, ELM32 (AUDIO BASIS B.)	P11	2	10	12	0	1	
4	21		TO GRP01, ELM37 (AUDIO BASIS B.)	P21	2	10	12	0	1	
4	31		TO GRP01, ELM42 (AUDIO BASIS B.)	P31	2	10	12	0	1	
4	41		TO GRP01, ELM47 (AUDIO BASIS B.)	P41	2	10	12	0	1	
4	51		TO GRP02, ELM32 (AUDIO BASIS B.)	P51	2	10	12	0	1	
4	61		TO GRP02, ELM37 (AUDIO BASIS B.)	P61	2	10	12	0	1	
4	71		TO GRP02, ELM42 (AUDIO BASIS B.)	P71	2	10	12	0	1	
4	81		TO GRP02, ELM47 (AUDIO BASIS B.)	P81	2	10	12	0	1	
11	1		LINE INPUT, CH 1	XLR J01	0	3	3	0	0	
11	2		LINE INPUT, CH 2	XLR J02	0	3	3	0	0	
11	3		LINE INPUT, CH 3	XLR J03	0	3	3	0	0	
11	4		LINE INPUT, CH 4	XLR J04	0	3	3	0	0	
11	5		LINE INPUT, CH 5	XLR J05	0	3	3	0	0	
11	6		LINE INPUT, CH 6	XLR J06	0	3	3	0	0	
11	7		LINE INPUT, CH 7	XLR J07	0	3	3	0	0	
11	8		LINE INPUT, CH 8	XLR J08	0	3	3	0	0	
11	9		LINE INPUTS, CH 1 TO 8	P01	0	25	25	0	0	
14	1		LINE OUTPUT, CH 1	XLR P01	0	3	3	0	0	
14	2		LINE OUTPUT, CH 2	XLR P02	0	3	3	0	0	
14	3		LINE OUTPUT, CH 3	XLR P03	0	3	3	0	0	
14	4		LINE OUTPUT, CH 4	XLR P04	0	3	3	0	0	
14	5		LINE OUTPUT, CH 5	XLR P05	0	3	3	0	0	
14	6		LINE OUTPUT, CH 6	XLR P06	0	3	3	0	0	
14	7		LINE OUTPUT, CH 7	XLR P07	0	3	3	0	0	
14	8		LINE OUTPUT, CH 8	XLR P08	0	3	3	0	0	
14	9		LINE OUTPUTS, CH 1 TO 8	P09	0	25	25	0	0	
			DISTRIBUTED IN 126 ELM	TOTAL :	83	2358	2441	0	83	

WILLI STUDER AG — ELEMENT SUMMARY — 89/07/20 — 8:15 — PAGE 14

TAPE TRANSPORT & AUDIO MCH — 89/04/19 - 00

ASY 4 AUDIO ELECTRONICS, CH 09 TO 16

GRP	ELM	PART NUMBER	DESCRIPTION		UNUSED PINS	USED PINS	TOT.PINS	MULT.PINS	COD.KEYS	REMARK
1	1	1.820.715.00	LINE AMPLIFIER, CH 9	J01	0	38	38	0	1	
1	2	1.820.815.00	CONTROLLER INTERNAL NRS CH 9	J02	2	62	64	0	0	
1	3	1.820.710.00	REPRODUCE AMPLIFIER, CH 9	J03	0	38	38	0	1	
1	4	1.820.811.00	RECORD AMPLIFIER, CH 9	J04	0	38	38	0	1	
1	5	1.820.813.00	HF-DRIVER, CH 9	J05	1	37	38	0	1	
1	6	1.820.715.00	LINE AMPLIFIER, CH10	J06	0	38	38	0	1	
1	7	1.820.815.00	CONTROLLER INTERNAL NRS CH10	J07	2	62	64	0	0	
1	8	1.820.710.00	REPRODUCE AMPLIFIER, CH10	J08	0	38	38	0	1	
1	9	1.820.811.00	RECORD AMPLIFIER, CH10	J09	0	38	38	0	1	
1	10	1.820.813.00	HF-DRIVER, CH10	J10	1	37	38	0	1	
1	11	1.820.715.00	LINE AMPLIFIER, CH11	J11	0	38	38	0	1	
1	12	1.820.815.00	CONTROLLER INTERNAL NRS CH11	J12	2	62	64	0	0	
1	13	1.820.710.00	REPRODUCE AMPLIFIER, CH11	J13	0	38	38	0	1	
1	14	1.820.811.00	RECORD AMPLIFIER, CH11	J14	0	38	38	0	1	
1	15	1.820.813.00	HF-DRIVER, CH11	J15	1	37	38	0	1	
1	16	1.820.715.00	LINE AMPLIFIER, CH12	J16	0	38	38	0	1	
1	17	1.820.815.00	CONTROLLER INTERNAL NRS CH12	J17	2	62	64	0	0	
1	18	1.820.710.00	REPRODUCE AMPLIFIER, CH12	J18	0	38	38	0	1	
1	19	1.820.811.00	RECORD AMPLIFIER, CH12	J19	0	38	38	0	1	
1	20	1.820.813.00	HF-DRIVER, CH12	J20	1	37	38	0	1	
1	21	1.820.717.00	BUS CONVERTER	J21	9	55	64	0	0	
1	31		LINE INPUT/OUTPUT, CH 9	J22	0	6	6	0	1	
1	32		NOISE REDUCTION, CH 9	J23	0	12	12	0	1	
1	33		REPRODUCE PREAMPLIFIER, CH 9	J24	0	3	3	0	1	
1	34		RECORD HEAD, CH 9	J25	0	3	3	0	1	
1	35		ERASE HEAD, CH 9	J26	0	3	3	0	1	
1	36		LINE INPUT/OUTPUT, CH10	J27	0	6	6	0	1	
1	37		NOISE REDUCTION, CH10	J28	0	12	12	0	1	
1	38		REPRODUCE PREAMPLIFIER, CH10	J29	0	3	3	0	1	
1	39		RECORD HEAD, CH10	J30	0	3	3	0	1	
1	40		ERASE HEAD, CH10	J31	0	3	3	0	1	
1	41		LINE INPUT/OUTPUT, CH11	J32	0	6	6	0	1	
1	42		NOISE REDUCTION, CH11	J33	0	12	12	0	1	
1	43		REPRODUCE PREAMPLIFIER, CH11	J34	0	3	3	0	1	
1	44		RECORD HEAD, CH11	J35	0	3	3	0	1	
1	45		ERASE HEAD, CH11	J36	0	3	3	0	1	
1	46		LINE INPUT/OUTPUT, CH12	J37	0	6	6	0	1	
1	47		NOISE REDUCTION, CH12	J38	0	12	12	0	1	
1	48		REPRODUCE PREAMPLIFIER, CH12	J39	0	3	3	0	1	
1	49		RECORD HEAD, CH12	J40	0	3	3	0	1	
1	50		ERASE HEAD, CH12	J41	0	3	3	0	1	
1	60		JUMPER SWITCH	JS01	0	5	5	0	0	
1	70			P01	0	40	40	0	0	
2	1	1.820.715.00	LINE AMPLIFIER, CH13	J01	0	38	38	0	1	
2	2	1.820.815.00	CONTROLLER INTERNAL NRS CH13	J02	2	62	64	0	0	
2	3	1.820.710.00	REPRODUCE AMPLIFIER, CH13	J03	0	38	38	0	1	
2	4	1.820.811.00	RECORD AMPLIFIER, CH13	J04	0	38	38	0	1	
2	5	1.820.813.00	HF-DRIVER, CH13	J05	1	37	38	0	1	
2	6	1.820.715.00	LINE AMPLIFIER, CH14	J06	0	38	38	0	1	

WILLI STUDER AG — ELEMENT SUMMARY — 89/07/20 — 8:15 — PAGE 15

TAPE TRANSPORT & AUDIO MCH — 89/04/19 - 00

ASY 4 AUDIO ELECTRONICS, CH 09 TO 16 <-- <-- <-- CONTINUATION

GRP	ELM	PART NUMBER	DESCRIPTION		UNUSED PINS	USED PINS	TOT.PINS	MULT.PINS	COD.KEYS	REMARK
2	7	1.820.815.00	CONTROLLER INTERNAL NRS CH14	J07	2	62	64	0	0	
2	8	1.820.710.00	REPRODUCE AMPLIFIER, CH14	J08	0	38	38	0	1	
2	9	1.820.811.00	RECORD AMPLIFIER, CH14	J09	0	38	38	0	1	
2	10	1.820.813.00	HF-DRIVER, CH14	J10	1	37	38	0	1	
2	11	1.820.715.00	LINE AMPLIFIER, CH15	J11	0	38	38	0	1	
2	12	1.820.815.00	CONTROLLER INTERNAL NRS CH15	J12	2	62	64	0	0	
2	13	1.820.710.00	REPRODUCE AMPLIFIER, CH15	J13	0	38	38	0	1	
2	14	1.820.811.00	RECORD AMPLIFIER, CH15	J14	0	38	38	0	1	
2	15	1.820.813.00	HF-DRIVER, CH15	J15	1	37	38	0	1	
2	16	1.820.715.00	LINE AMPLIFIER, CH16	J16	0	38	38	0	1	
2	17	1.820.815.00	CONTROLLER INTERNAL NRS CH16	J17	2	62	64	0	0	
2	18	1.820.710.00	REPRODUCE AMPLIFIER, CH16	J18	0	38	38	0	1	
2	19	1.820.811.00	RECORD AMPLIFIER, CH16	J19	0	38	38	0	1	
2	20	1.820.813.00	HF-DRIVER, CH16	J20	1	37	38	0	1	
2	21	1.820.717.00	BUS CONVERTER	J21	9	55	64	0	0	
2	31		LINE INPUT/OUTPUT, CH13	J22	0	6	6	0	1	
2	32		NOISE REDUCTION, CH13	J23	0	12	12	0	1	
2	33		REPRODUCE PREAMPLIFIER, CH13	J24	0	3	3	0	1	
2	34		RECORD HEAD, CH13	J25	0	3	3	0	1	
2	35		ERASE HEAD, CH13	J26	0	3	3	0	1	
2	36		LINE INPUT/OUTPUT, CH14	J27	0	6	6	0	1	
2	37		NOISE REDUCTION, CH14	J28	0	12	12	0	1	
2	38		REPRODUCE PREAMPLIFIER, CH14	J29	0	3	3	0	1	
2	39		RECORD HEAD, CH14	J30	0	3	3	0	1	
2	40		ERASE HEAD, CH14	J31	0	3	3	0	1	
2	41		LINE INPUT/OUTPUT, CH15	J32	0	6	6	0	1	
2	42		NOISE REDUCTION, CH15	J33	0	12	12	0	1	
2	43		REPRODUCE PREAMPLIFIER, CH15	J34	0	3	3	0	1	
2	44		RECORD HEAD, CH15	J35	0	3	3	0	1	
2	45		ERASE HEAD, CH15	J36	0	3	3	0	1	
2	46		LINE INPUT/OUTPUT, CH16	J37	0	6	6	0	1	
2	47		NOISE REDUCTION, CH16	J38	0	12	12	0	1	
2	48		REPRODUCE PREAMPLIFIER, CH16	J39	0	3	3	0	1	
2	49		RECORD HEAD, CH16	J40	0	3	3	0	1	
2	50		ERASE HEAD, CH16	J41	0	3	3	0	1	
2	60		JUMPER SWITCH	JS01	0	5	5	0	0	
2	70			P01	0	40	40	0	0	
3	1		SUPPLY PREAMPLIFIER CH17 TO 24	J01	0	5	5	0	1	
3	2		SUPPLY ASY04, GRP01	J02	1	9	10	0	0	
3	3		SUPPLY ASY04, GRP02	J03	1	9	10	0	0	
3	4		SUPPLY CONNECTOR	J04	3	7	10	0	0	
3	5		SUPPLY ASY04, GRP04 (NRS OPTION)	J05	1	9	10	0	0	
4	1		NOISE REDUCTION UNIT CH 9	J01	23	7	30	0	2	
4	2		NOISE REDUCTION UNIT CH10	J02	0	0	0	0	0	
4	3		NOISE REDUCTION UNIT CH11	J03	0	0	0	0	0	
4	4		NOISE REDUCTION UNIT CH12	J04	0	0	0	0	0	
4	5		NOISE REDUCTION UNIT CH13	J05	0	0	0	0	0	
4	6		NOISE REDUCTION UNIT CH14	J06	0	0	0	0	0	

WILLI STUDER AG * E L E M E N T S U M M A R Y * 89/07/20 * 8:15 * P A G E 16 *

* * TAPE TRANSPORT & AUDIO MCH * * 89/04/19 - 00 *

ASY 4 AUDIO ELECTRONICS, CH 09 TO 16 <-- <-- <-- CONTINUATION

GRP	ELM	PART NUMBER	DESCRIPTION		UNUSED PINS	USED PINS	TOT.PINS	MULT.PINS	COD.KEYS	REMARK
4	7		NOISE REDUCTION UNIT CH15	J07	0	0	0	0	0	
4	8		NOISE REDUCTION UNIT CH16	J08	0	0	0	0	0	
4	11		TO GRP01, ELM32 (AUDIO BASIS B.)	P01	0	12	12	0	1	
4	12		TO GRP01, ELM37 (AUDIO BASIS B.)	P02	0	12	12	0	1	
4	13		TO GRP01, ELM42 (AUDIO BASIS B.)	P03	0	12	12	0	1	
4	14		TO GRP01, ELM47 (AUDIO BASIS B.)	P04	0	12	12	0	1	
4	15		TO GRP02, ELM32 (AUDIO BASIS B.)	P05	0	12	12	0	1	
4	16		TO GRP02, ELM37 (AUDIO BASIS B.)	P06	0	12	12	0	1	
4	17		TO GRP02, ELM42 (AUDIO BASIS B.)	P07	0	12	12	0	1	
4	18		TO GRP02, ELM47 (AUDIO BASIS B.)	P08	0	12	12	0	1	
4	19		FROM GRP03, ELM05 (DISTR. B)	P09	1	9	10	0	0	
11	1		LINE INPUT, CH 9	XLR J01	0	3	3	0	0	
11	2		LINE INPUT, CH10	XLR J02	0	3	3	0	0	
11	3		LINE INPUT, CH11	XLR J03	0	3	3	0	0	
11	4		LINE INPUT, CH12	XLR J04	0	3	3	0	0	
11	5		LINE INPUT, CH13	XLR J05	0	3	3	0	0	
11	6		LINE INPUT, CH14	XLR J06	0	3	3	0	0	
11	7		LINE INPUT, CH15	XLR J07	0	3	3	0	0	
11	8		LINE INPUT, CH16	XLR J08	0	3	3	0	0	
11	9		LINE INPUTS, CH 9 TO 16	P01	0	25	25	0	0	
14	1		LINE OUTPUT, CH 9	XLR P01	0	3	3	0	0	
14	2		LINE OUTPUT, CH10	XLR P02	0	3	3	0	0	
14	3		LINE OUTPUT, CH11	XLR P03	0	3	3	0	0	
14	4		LINE OUTPUT, CH12	XLR P04	0	3	3	0	0	
14	5		LINE OUTPUT, CH13	XLR P05	0	3	3	0	0	
14	6		LINE OUTPUT, CH14	XLR P06	0	3	3	0	0	
14	7		LINE OUTPUT, CH15	XLR P07	0	3	3	0	0	
14	8		LINE OUTPUT, CH16	XLR P08	0	3	3	0	0	
14	9		LINE OUTPUTS, CH 9 TO 16	P09	0	25	25	0	0	
			DISTRIBUTED IN 126 ELM	TOTAL :	72	2369	2441	0	83	

WILLI STUDER AG * E L E M E N T S U M M A R Y * 89/07/20 * 8:15 * P A G E 17 *

* * TAPE TRANSPORT & AUDIO MCH * * 89/04/19 - 00 *

ASY 5 AUDIO ELECTRONICS, CH 17 TO 24

GRP	ELM	PART NUMBER	DESCRIPTION		UNUSED PINS	USED PINS	TOT.PINS	MULT.PINS	COD.KEYS	REMARK
1	1	1.820.715.00	LINE AMPLIFIER, CH17	J01	0	38	38	0	1	
1	2	1.820.815.00	CONTROLLER INTERNAL NRS CH17	J02	2	62	64	0	0	
1	3	1.820.710.00	REPRODUCE AMPLIFIER, CH17	J03	0	38	38	0	1	
1	4	1.820.811.00	RECORD AMPLIFIER, CH17	J04	0	38	38	0	1	
1	5	1.820.813.00	HF-DRIVER, CH17	J05	1	37	38	0	1	
1	6	1.820.715.00	LINE AMPLIFIER, CH18	J06	0	38	38	0	1	
1	7	1.820.815.00	CONTROLLER INTERNAL NRS CH18	J07	2	62	64	0	0	
1	8	1.820.710.00	REPRODUCE AMPLIFIER, CH18	J08	0	38	38	0	1	
1	9	1.820.811.00	RECORD AMPLIFIER, CH18	J09	0	38	38	0	1	
1	10	1.820.813.00	HF-DRIVER, CH18	J10	1	37	38	0	1	
1	11	1.820.715.00	LINE AMPLIFIER, CH19	J11	0	38	38	0	1	
1	12	1.820.815.00	CONTROLLER INTERNAL NRS CH19	J12	2	62	64	0	0	
1	13	1.820.710.00	REPRODUCE AMPLIFIER, CH19	J13	0	38	38	0	1	
1	14	1.820.811.00	RECORD AMPLIFIER, CH19	J14	0	38	38	0	1	
1	15	1.820.813.00	HF-DRIVER, CH19	J15	1	37	38	0	1	
1	16	1.820.715.00	LINE AMPLIFIER, CH20	J16	0	38	38	0	1	
1	17	1.820.815.00	CONTROLLER INTERNAL NRS CH20	J17	2	62	64	0	0	
1	18	1.820.710.00	REPRODUCE AMPLIFIER, CH20	J18	0	38	38	0	1	
1	19	1.820.811.00	RECORD AMPLIFIER, CH20	J19	0	38	38	0	1	
1	20	1.820.813.00	HF-DRIVER, CH20	J20	1	37	38	0	1	
1	21	1.820.717.00	BUS CONVERTER	J21	9	55	64	0	0	
1	31		LINE INPUT/OUTPUT, CH17	J22	0	6	6	0	1	
1	32		NOISE REDUCTION, CH17	J23	0	12	12	0	1	
1	33		REPRODUCE PREAMPLIFIER, CH17	J24	0	3	3	0	1	
1	34		RECORD HEAD, CH17	J25	0	3	3	0	1	
1	35		ERASE HEAD, CH17	J26	0	3	3	0	1	
1	36		LINE INPUT/OUTPUT, CH18	J27	0	6	6	0	1	
1	37		NOISE REDUCTION, CH18	J28	0	12	12	0	1	
1	38		REPRODUCE PREAMPLIFIER, CH18	J29	0	3	3	0	1	
1	39		RECORD HEAD, CH18	J30	0	3	3	0	1	
1	40		ERASE HEAD, CH18	J31	0	3	3	0	1	
1	41		LINE INPUT/OUTPUT, CH19	J32	0	6	6	0	1	
1	42		NOISE REDUCTION, CH19	J33	0	12	12	0	1	
1	43		REPRODUCE PREAMPLIFIER, CH19	J34	0	3	3	0	1	
1	44		RECORD HEAD, CH19	J35	0	3	3	0	1	
1	45		ERASE HEAD, CH19	J36	0	3	3	0	1	
1	46		LINE INPUT/OUTPUT, CH20	J37	0	6	6	0	1	
1	47		NOISE REDUCTION, CH20	J38	0	12	12	0	1	
1	48		REPRODUCE PREAMPLIFIER, CH20	J39	0	3	3	0	1	
1	49		RECORD HEAD, CH20	J40	0	3	3	0	1	
1	50		ERASE HEAD, CH20	J41	0	3	3	0	1	
1	60		JUMPER SWITCH	JS01	0	5	5	0	0	
1	70			P01	0	40	40	0	0	
2	1	1.820.715.00	LINE AMPLIFIER, CH21	J01	0	38	38	0	1	
2	2	1.820.815.00	CONTROLLER INTERNAL NRS CH21	J02	2	62	64	0	0	
2	3	1.820.710.00	REPRODUCE AMPLIFIER, CH21	J03	0	38	38	0	1	
2	4	1.820.811.00	RECORD AMPLIFIER, CH21	J04	0	38	38	0	1	
2	5	1.820.813.00	HF-DRIVER, CH21	J05	1	37	38	0	1	
2	6	1.820.715.00	LINE AMPLIFIER, CH22	J06	0	38	38	0	1	

* WILLI STUDER AG * E L E M E N T S U M M A R Y * 89/07/20 * 8:15 * P A G E 18 *

* * TAPE TRANSPORT & AUDIO MCH * * 89/04/19 - 00 *

ASY 5 AUDIO ELECTRONICS, CH 17 TO 24 <-- <-- <-- CONTINUATION

GRP	ELM	PART NUMBER	DESCRIPTION		UNUSED PINS	USED PINS	TOT.PINS	MULT.PINS	COD.KEYS	REMARK
2	7	1.820.815.00	CONTROLLER INTERNAL NRS CH22	J07	2	62	64	0	0	
2	8	1.820.710.00	REPRODUCE AMPLIFIER, CH22	J08	0	38	38	0	1	
2	9	1.820.811.00	RECORD AMPLIFIER, CH22	J09	0	38	38	0	1	
2	10	1.820.813.00	HF-DRIVER, CH22	J10	1	37	38	0	1	
2	11	1.820.715.00	LINE AMPLIFIER, CH23	J11	0	38	38	0	1	
2	12	1.820.815.00	CONTROLLER INTERNAL NRS CH23	J12	2	62	64	0	0	
2	13	1.820.710.00	REPRODUCE AMPLIFIER, CH23	J13	0	38	38	0	1	
2	14	1.820.811.00	RECORD AMPLIFIER, CH23	J14	0	38	38	0	1	
2	15	1.820.813.00	HF-DRIVER, CH23	J15	1	37	38	0	1	
2	16	1.820.715.00	LINE AMPLIFIER, CH24	J16	0	38	38	0	1	
2	17	1.820.815.00	CONTROLLER INTERNAL NRS CH24	J17	2	62	64	0	0	
2	18	1.820.710.00	REPRODUCE AMPLIFIER, CH24	J18	0	38	38	0	1	
2	19	1.820.811.00	RECORD AMPLIFIER, CH24	J19	0	38	38	0	1	
2	20	1.820.813.00	HF-DRIVER, CH24	J20	1	37	38	0	1	
2	21	1.820.717.00	BUS CONVERTER	J21	9	55	64	0	0	
2	31		LINE INPUT/OUTPUT, CH21	J22	0	6	6	0	1	
2	32		NOISE REDUCTION, CH21	J23	0	12	12	0	1	
2	33		REPRODUCE PREAMPLIFIER, CH21	J24	0	3	3	0	1	
2	34		RECORD HEAD, CH21	J25	0	3	3	0	1	
2	35		ERASE HEAD, CH21	J26	0	3	3	0	1	
2	36		LINE INPUT/OUTPUT, CH22	J27	0	6	6	0	1	
2	37		NOISE REDUCTION, CH22	J28	0	12	12	0	1	
2	38		REPRODUCE PREAMPLIFIER, CH22	J29	0	3	3	0	1	
2	39		RECORD HEAD, CH22	J30	0	3	3	0	1	
2	40		ERASE HEAD, CH22	J31	0	3	3	0	1	
2	41		LINE INPUT/OUTPUT, CH23	J32	0	6	6	0	1	
2	42		NOISE REDUCTION, CH23	J33	0	12	12	0	1	
2	43		REPRODUCE PREAMPLIFIER, CH23	J34	0	3	3	0	1	
2	44		RECORD HEAD, CH23	J35	0	3	3	0	1	
2	45		ERASE HEAD, CH23	J36	0	3	3	0	1	
2	46		LINE INPUT/OUTPUT, CH24	J37	0	6	6	0	1	
2	47		NOISE REDUCTION, CH24	J38	0	12	12	0	1	
2	48		REPRODUCE PREAMPLIFIER, CH24	J39	0	3	3	0	1	
2	49		RECORD HEAD, CH24	J40	0	3	3	0	1	
2	50		ERASE HEAD, CH24	J41	0	3	3	0	1	
2	60		JUMPER SWITCH	JS01	0	5	5	0	0	
2	70			P01	0	40	40	0	0	
3	1		SUPPLY PREAMPLIFIER CH 9 TO 16	J01	0	5	5	0	1	
3	2		SUPPLY ASY05, GRP01	J02	1	9	10	0	0	
3	3		SUPPLY ASY05, GRP02	J03	1	9	10	0	0	
3	4		SUPPLY CONNECTOR	J04	3	7	10	0	0	
3	5		SUPPLY ASY05, GRP04 (NRS OPTION)	J05	1	9	10	0	0	
4	1		NOISE REDUCTION UNIT CH17	J01	23	7	30	0	2	
4	2		NOISE REDUCTION UNIT CH18	J02	0	0	0	0	0	
4	3		NOISE REDUCTION UNIT CH19	J03	0	0	0	0	0	
4	4		NOISE REDUCTION UNIT CH20	J04	0	0	0	0	0	
4	5		NOISE REDUCTION UNIT CH21	J05	0	0	0	0	0	
4	6		NOISE REDUCTION UNIT CH22	J06	0	0	0	0	0	

* WILLI STUDER AG * E L E M E N T S U M M A R Y * 89/07/20 * 8:15 * P A G E 19 *

* * TAPE TRANSPORT & AUDIO MCH * * 89/04/19 - 00 *

ASY 5 AUDIO ELECTRONICS, CH 17 TO 24 <-- <-- <-- CONTINUATION

GRP	ELM	PART NUMBER	DESCRIPTION		UNUSED PINS	USED PINS	TOT.PINS	MULT.PINS	COD.KEYS	REMARK
4	7		NOISE REDUCTION UNIT CH23	J07	0	0	0	0	0	
4	8		NOISE REDUCTION UNIT CH24	J08	0	0	0	0	0	
4	11		TO GRP01, ELM32 (AUDIO BASIS B.)	P01	0	12	12	0	1	
4	12		TO GRP01, ELM37 (AUDIO BASIS B.)	P02	0	12	12	0	1	
4	13		TO GRP01, ELM42 (AUDIO BASIS B.)	P03	0	12	12	0	1	
4	14		TO GRP01, ELM47 (AUDIO BASIS B.)	P04	0	12	12	0	1	
4	15		TO GRP02, ELM32 (AUDIO BASIS B.)	P05	0	12	12	0	1	
4	16		TO GRP02, ELM37 (AUDIO BASIS B.)	P06	0	12	12	0	1	
4	17		TO GRP02, ELM42 (AUDIO BASIS B.)	P07	0	12	12	0	1	
4	18		TO GRP02, ELM47 (AUDIO BASIS B.)	P08	0	12	12	0	1	
4	19		FROM GRP03, ELM05 (DISTR. B)	P09	1	9	10	0	0	
11	1		LINE INPUT, CH17	XLR J01	0	3	3	0	0	
11	2		LINE INPUT, CH18	XLR J02	0	3	3	0	0	
11	3		LINE INPUT, CH19	XLR J03	0	3	3	0	0	
11	4		LINE INPUT, CH20	XLR J04	0	3	3	0	0	
11	5		LINE INPUT, CH21	XLR J05	0	3	3	0	0	
11	6		LINE INPUT, CH22	XLR J06	0	3	3	0	0	
11	7		LINE INPUT, CH23	XLR J07	0	3	3	0	0	
11	8		LINE INPUT, CH24	XLR J08	0	3	3	0	0	
11	9		LINE INPUTS, CH19 TO 24	P01	0	25	25	0	0	
14	1		LINE OUTPUT, CH17	XLR P01	0	3	3	0	0	
14	2		LINE OUTPUT, CH18	XLR P02	0	3	3	0	0	
14	3		LINE OUTPUT, CH19	XLR P03	0	3	3	0	0	
14	4		LINE OUTPUT, CH20	XLR P04	0	3	3	0	0	
14	5		LINE OUTPUT, CH21	XLR P05	0	3	3	0	0	
14	6		LINE OUTPUT, CH22	XLR P06	0	3	3	0	0	
14	7		LINE OUTPUT, CH23	XLR P07	0	3	3	0	0	
14	8		LINE OUTPUT, CH24	XLR P08	0	3	3	0	0	
14	9		LINE OUTPUTS, CH19 TO 24	P09	0	25	25	0	0	
			DISTRIBUTED IN 126 ELM	TOTAL :	72	2369	2441	0	83	

```
*****************************************************************************************************************************
*    WILLI STUDER AG    *    E L E M E N T    S U M M A R Y                    *  89/07/20  *   8:15  *  P A G E  20    *
*****************************************************************************************************************************
*                       * TAPE TRANSPORT & AUDIO MCH *                         *  89/04/19 - 00                          *
*****************************************************************************************************************************
ASY   6       1.820.620.00  VU PANEL 24 CH

GRP  ELM  PART NUMBER       DESCRIPTION                              UNUSED PINS  USED PINS  TOT.PINS  MULT.PINS  COD.KEYS  REMARK
---  ---  ----------------  ---------------------------------------  -----------  ---------  --------  ---------  --------  ---------
 1    1                     CONNECTOR MPU VU PANEL MCH       J01           2          36        38          0         1
 1    2                     SERVICE BOARD                    J02           2          36        38          0         1
 1    3                     CONNECTOR LCD DISPLAY            P03           0          16        16          0         0
 1    4                     KEYBOARD DRIVER, MASTER          P04           2          24        26          0         0
 1    5                     CONNECTOR BARGRAPHS              P05           0          26        26          0         0
 1    6                     CH CONTROL KEYBOARD DRIVER       P06           0          26        26          0         0
 1    7                     CONNECTOR DC CONVERTER           P07           6           0         6          0         0
 1    8                                                      P08/P09       0           2         2          0         0
---  ---  ----------------  ---------------------------------------  -----------  ---------  --------  ---------  --------  ---------
 2    1                                                      P01           2          36        38          0         1
---  ---  ----------------  ---------------------------------------  -----------  ---------  --------  ---------  --------  ---------
 3    1                                                      P01           2          36        38          0         1
---  ---  ----------------  ---------------------------------------  -----------  ---------  --------  ---------  --------  ---------
 4    1                     CONNECTOR POWER INPUT                          0           2         2          0         0
 4    2                     DC OUTPUT                                      0           6         6          0         0
---  ---  ----------------  ---------------------------------------  -----------  ---------  --------  ---------  --------  ---------
 5    1                     BUS                              P01           0          26        26          0         0
 5    2                     KEYBOARD                         P02           1          29        30          0         0
---  ---  ----------------  ---------------------------------------  -----------  ---------  --------  ---------  --------  ---------
 6    1                     BUS                              P01           0          26        26          0         0
 6    2                     KEYBOARD                         P02           1          29        30          0         0
---  ---  ----------------  ---------------------------------------  -----------  ---------  --------  ---------  --------  ---------
 7    1                     BUS                              P01           0          26        26          0         0
 7    2                     KEYBOARD                         P02           1          29        30          0         0
---  ---  ----------------  ---------------------------------------  -----------  ---------  --------  ---------  --------  ---------
 8    1                     BUS                              P01           2          24        26          0         0
 8    2                     KEYBOARD MASTER                  J01           1          29        30          0         0
---  ---  ----------------  ---------------------------------------  -----------  ---------  --------  ---------  --------  ---------
 9    1                                                      P01           1          29        30          0         0
---  ---  ----------------  ---------------------------------------  -----------  ---------  --------  ---------  --------  ---------
10    1                                                      P01           1          29        30          0         0
---  ---  ----------------  ---------------------------------------  -----------  ---------  --------  ---------  --------  ---------
11    1                                                      P01           1          29        30          0         0
---  ---  ----------------  ---------------------------------------  -----------  ---------  --------  ---------  --------  ---------
12    1                                                      P01           1          29        30          0         0
---  ---  ----------------  ---------------------------------------  -----------  ---------  --------  ---------  --------  ---------
13    1       1.820.736.00  BARGRAPHS BOARD, CH 01 TO 08     P01           0          26        26          0         0
---  ---  ----------------  ---------------------------------------  -----------  ---------  --------  ---------  --------  ---------
14    1       1.820.736.00  BARGRAPHS BOARD, CH 09 TO 16     P01           0          26        26          0         0
---  ---  ----------------  ---------------------------------------  -----------  ---------  --------  ---------  --------  ---------
15    1       1.820.736.00  BARGRAPHS BOARD, CH 17 TO 24     P01           0          26        26          0         0
---  ---  ----------------  ---------------------------------------  -----------  ---------  --------  ---------  --------  ---------
16    1                     BUS                              P01           2          24        26          0         0
---  ---  ----------------  ---------------------------------------  -----------  ---------  --------  ---------  --------  ---------
17    1                     CONNECTOR FROM ASS01, GRP35                    0           8         8          0         0
17    2                     TO ASS06, GRP01, ELM08                         0           2         2          0         0
17    3                     TO DC CONVERTER                                0           2         2          0         0
---  ---  ----------------  ---------------------------------------  -----------  ---------  --------  ---------  --------  ---------
52    1                     TO GRP01, ELM03                  J01           0          16        16          0         0
---  ---  ----------------  ---------------------------------------  -----------  ---------  --------  ---------  --------  ---------
                            DISTRIBUTED IN   32 ELM      TOTAL :          28         710       738          0         4
=============================================================================================================================


*****************************************************************************************************************************
*    WILLI STUDER AG    *    E L E M E N T    S U M M A R Y                    *  89/07/20  *   8:15  *  P A G E  21    *
*****************************************************************************************************************************
*                       * TAPE TRANSPORT & AUDIO MCH *                         *  89/04/19 - 00                          *
*****************************************************************************************************************************
ASY   7       1.820.350.00  POWER SUPPLY, MCH

GRP  ELM  PART NUMBER       DESCRIPTION                              UNUSED PINS  USED PINS  TOT.PINS  MULT.PINS  COD.KEYS  REMARK
---  ---  ----------------  ---------------------------------------  -----------  ---------  --------  ---------  --------  ---------
 1    1         54.42.0026  POWER INPUT                      P01           0           3         3          0         0
 1    2         54.42.0200  POWER OUTPUT                     J01           0           3         3          0         0
---  ---  ----------------  ---------------------------------------  -----------  ---------  --------  ---------  --------  ---------
 2    1                     SWITCH                           S01           4           0         4          0         0
 2    2                     CONTROL LAMP                     B01           2           0         2          0         0
---  ---  ----------------  ---------------------------------------  -----------  ---------  --------  ---------  --------  ---------
 3    1         55.12.0001  SWITCH RIGHT                     S01           4           0         4          0         0
 3    2         55.12.0001  SWITCH LEFT                      S02           4           0         4          0         0
---  ---  ----------------  ---------------------------------------  -----------  ---------  --------  ---------  --------  ---------
 4    1                     PRIMARY                                        2           0         2          0         0
 4    2                     SECONDARY 1                                    2           0         2          0         0
 4    3                     SECONDARY 2                                    2           0         2          0         0
---  ---  ----------------  ---------------------------------------  -----------  ---------  --------  ---------  --------  ---------
 5    1                     PRIMARY                                        2           0         2          0         0
 5    2                     SECONDARY 1                                    2           0         2          0         0
 5    3                     SECONDARY 2                                    2           0         2          0         0
---  ---  ----------------  ---------------------------------------  -----------  ---------  --------  ---------  --------  ---------
 6    1                                                                    4           0         4          0         0
 6    2                                                                    4           0         4          0         0
---  ---  ----------------  ---------------------------------------  -----------  ---------  --------  ---------  --------  ---------
 7    1                                                                    4           0         4          0         0
 7    2                                                                    4           0         4          0         0
---  ---  ----------------  ---------------------------------------  -----------  ---------  --------  ---------  --------  ---------
 8    1         70.01.0232                                   DZ01          2           2         4          0         0
 8    2         70.01.0232                                   DZ02          2           2         4          0         0
 8    3         70.01.0232                                   DZ03          2           2         4          0         0
 8    4         70.01.0232                                   DZ04          2           2         4          0         0
---  ---  ----------------  ---------------------------------------  -----------  ---------  --------  ---------  --------  ---------
 9    1         59.07.0004  CAPACITOR                        C01           0           2         2          0         0
 9    2         59.07.0004  CAPACITOR                        C02           0           2         2          0         0
 9    3         59.07.0004  CAPACITOR                        C03           0           2         2          0         0
 9    4         56.02.0105  INPUT START RELAIS               K01           2           7         9          0         0
 9    5         57.92.1681  RESISTOR ( 4 PIECES )            R01           0           2         2          0         0
 9    6         54.33.6007  INPUT, POS.                                    1           5         6          0         0
 9    7         54.33.6007  OUTPUT, POS.                                   2           4         6          0         0
 9    8         54.33.6007  OUTPUT, NEG.                                   2           4         6          0         0
 9    9         57.92.4152  RESISTOR                         R02           0           2         2          0         0
 9   10                                                                    5           1         6          0         0
---  ---  ----------------  ---------------------------------------  -----------  ---------  --------  ---------  --------  ---------
10    1         51.01.0125  FUSE                             F01           0           2         2          0         0
10    2         51.01.0125  FUSE                             F02           0           2         2          0         0
10    3         51.01.0229  FUSE                             F03           0           2         2          0         0
10    4         51.01.0229  FUSE                             F04           0           2         2          0         0
---  ---  ----------------  ---------------------------------------  -----------  ---------  --------  ---------  --------  ---------
11    1         54.25.0310                                   J02           1           9        10          0         0
---  ---  ----------------  ---------------------------------------  -----------  ---------  --------  ---------  --------  ---------
12    1         54.03.0144                                                16           0        16          0         0
12    2         54.03.0144                                                16           0        16          0         0
12    3         54.03.0144                                                28           0        28          0         0
12    4         54.03.0144                                                16           0        16          0         0
```

```
*    WILLI STUDER AG    *    E L E M E N T     S U M M A R Y                    * 89/07/20 *   8:15  *  P A G E  22   *
*                            * TAPE TRANSPORT & AUDIO MCH *                     * 89/04/19 - 00                      *
ASY   7        1.820.350.00  POWER SUPPLY, MCH                                                  <--  <--  <--  CONTINUATION

GRP  ELM  PART NUMBER        DESCRIPTION                              UNUSED PINS  USED PINS  TOT.PINS  MULT.PINS  COD.KEYS  REMARK
---  ---  ----------------   --------------------------------------   ----------   ---------  --------  ---------  --------  ---------
12     5        54.03.0144                                                    16          0        16          0         0
---  ---  ----------------   --------------------------------------   ----------   ---------  --------  ---------  --------  ---------
13     1                                                                      0          2         2          0         0
---  ---  ----------------   --------------------------------------   ----------   ---------  --------  ---------  --------  ---------
14     1        54.25.0308                                                     2          6         8          0         0
---  ---  ----------------   --------------------------------------   ----------   ---------  --------  ---------  --------  ---------
                             DISTRIBUTED IN   42 ELM       TOTAL :          157         70       227          0         0
```

```
*    WILLI STUDER AG    *    L O C A T I O N     P I N     L I S T            * 89/07/20 *   8:15  *  P A G E  23   *
*                            * TAPE TRANSPORT & AUDIO MCH *                     * 89/04/19 - 00                      *
ASY  1                       TAPE DECK

GRP 20        1.820.704.00
    BASIS BOARD                    TAPE DECK
=======================================

ELM  1
    SPOOLING M. DRIVE AMP. LEFT                P01
---------------------------------------
PNT SIGNAL NAME  COLOR LV TYPE              F
---------------------------------------
 1  + 0.0
 2  + 0.0
 3  + 5.6
 4  + 5.6
 5  +15.0
 6  -15.0
 7  PWMPL-L1
 8  PWMPL-L2
 9  PWMPL-H1
10  PWMPL-H2
11  PWMPL-L3
12  PWMPL-L4
13  AN-ICLD
14  PWMPL-L5
15  PWMPL-L6
16  + 0.0
---------------------------------------

ELM  2
    SPOOLING M. DRIVE AMP. RIGHT               P02
---------------------------------------
PNT SIGNAL NAME  COLOR LV TYPE              F
---------------------------------------
 1  + 0.0
 2  + 0.0
 3  + 5.6
 4  + 5.6
 5  +15.0
 6  -15.0
 7  PWMPR-L1
 8  PWMPR-L2
 9  PWMPR-H1
10  PWMPR-H2
11  PWMPR-L3
12  PWMPR-L4
13  AN-ICRD
14  PWMPR-L5
15  PWMPR-L6
16  + 0.0
---------------------------------------

GRP 20        1.820.704.00
                    <--  <--  <--  CONTINUATION
=======================================

ELM  3
    CAPSTAN M. DRIVE AMPLIFIER                 P03
---------------------------------------
PNT SIGNAL NAME  COLOR LV TYPE              F
---------------------------------------
 1  + 0.0
 2  + 0.0
 3  + 5.6
 4  + 5.6
 5  +15.0
 6  -15.0
 7  AN-CSPDC
 8  TD-TCM1
 9  + 0.0
10  TD-TCM2
11  + 0.0
12  + 0.0
13  TC-CPREF
14  TC-CAPDC
15  TD-C76K
16  + 0.0
---------------------------------------

ELM  4
    PAR. CONT. INT. SYNCHRONIZER               P04
---------------------------------------
PNT SIGNAL NAME  COLOR LV TYPE              F
---------------------------------------
 1  + 0.0
 2  + 0.0
 3  + 5.6
 4  + 5.6
 5  +15.0
 6  -15.0
 7
 8  TC-TCDIR
 9  + 0.0
10  TC-TCMV
11  + 0.0
12  T-REFINT
13  TD-CAPSY
14  TD-MVDIR
15  TD-MVCLK
16  + 0.0
---------------------------------------

GRP 20        1.820.704.00
                    <--  <--  <--  CONTINUATION
=======================================

ELM  6
    OPTO + EXTENDED SENSORS                    P06
---------------------------------------
PNT SIGNAL NAME  COLOR LV TYPE              F
---------------------------------------
 1  + 0.0
 2  + 0.0
 3  + 5.6
 4  + 5.6
 5  +15.0
 6  -15.0
 7  TD-YTRSP
 8  TD-SHLD
 9  TD-TRSP
10  TD-TRSPR
---------------------------------------

ELM  7
    TAPE LIFT MOTOR, LEFT                      P07
---------------------------------------
PNT SIGNAL NAME  COLOR LV TYPE              F
---------------------------------------
 1  + 0.0
 2  + 0.0
 3  + 5.6
 4  + 5.6
 5  +26.0
 6  -26.0
 7
 8
 9
10
11  TD-RALP1
12  TD-RALC2
13  TD-RALP2
14  TD-RALC1
15  TD-RALEN
16
---------------------------------------
                                              ./.
```

WILLI STUDER AG * L O C A T I O N P I N L I S T * 89/07/20 * 8:15 * P A G E 24
* TAPE TRANSPORT & AUDIO MCH * * 89/04/19 - 00

ASY 1 TAPE DECK <-- <-- <-- CONTINUATION

GRP 20 1.820.704.00 <-- <-- <-- CONTINUATION

ELM 8
TAPE LIFT MOTOR, RIGHT P08

PNT	SIGNAL NAME	COLOR	LV	TYPE	F
1	+ 0.0				
2	+ 0.0				
3	+ 5.6				
4	+ 5.6				
5	+26.0				
6	-26.0				
7					
8					
9					
10					
11	TD-RARP1				
12	TD-RARC2				
13	TD-RARP2				
14	TD-RARC1				
15	TD-RAREN				
16					

ELM 9
TACHO SENSOR SPOOLING M. LEFT P09

PNT	SIGNAL NAME	COLOR	LV	TYPE	F
1	+ 0.0				
2	+ 0.0				
3	+ 5.6				
4	+ 5.6				
5	+15.0				
6	-15.0				
7	AN-RES1				
8	TD-TML2				
9	TD-TML1				
10					

./.

GRP 20 1.820.704.00 <-- <-- <-- CONTINUATION

ELM 10
TACHO SENSOR SPOOLING M. RIGHT P10

PNT	SIGNAL NAME	COLOR	LV	TYPE	F
1	+ 0.0				
2	+ 0.0				
3	+ 5.6				
4	+ 5.6				
5	+15.0				
6	-15.0				
7	AN-RES2				
8	TD-TMR2				
9	TD-TMR1				
10					

ELM 11
MOVE SENSOR P11

PNT	SIGNAL NAME	COLOR	LV	TYPE	F
1	+ 0.0				
2	+ 0.0				
3	+ 5.6				
4	+ 5.6				
5	+15.0				
6	-15.0				
7	AN-RES3				
8	TD-MOVE2				
9	TD-MOVE1				
10					

ELM 12
TAPE TENSION SENSOR, LEFT P12

PNT	SIGNAL NAME	COLOR	LV	TYPE	F
1	+ 0.0				
2	+ 0.0				
3	+ 5.6				
4	+ 5.6				
5	+15.0				
6	-15.0				
7					
8					
9	AN-TTL				
10					

GRP 20 1.820.704.00 <-- <-- <-- CONTINUATION

ELM 13
TAPE TENSION SENSOR, RIGHT P13

PNT	SIGNAL NAME	COLOR	LV	TYPE	F
1	+ 0.0				
2	+ 0.0				
3	+ 5.6				
4	+ 5.6				
5	+15.0				
6	-15.0				
7					
8					
9	AN-TTR				
10					

ELM 14
FUSE FAILURE DETECTOR P14

PNT	SIGNAL NAME	COLOR	LV	TYPE	F
1	+STABIN3				
2	+STABIN3				
3					
4	+24.0				
5	+STABIN2				
6	T-SUPVON				
7	+STABIN1				
8	+STABIN1				
9	+ 5.6				
10	+ 5.6				
11	+ 0.0				
12	+ 0.0				
13	-15.0				
14	+15.0				
15	+26.0				
16	-26.0				

./.

WILLI STUDER AG * L O C A T I O N P I N L I S T * 89/07/20 * 8:15 * P A G E 25
* TAPE TRANSPORT & AUDIO MCH * * 89/04/19 - 00

ASY 1 TAPE DECK <-- <-- <-- CONTINUATION

GRP 20 1.820.704.00 <-- <-- <-- CONTINUATION

ELM 15
DISPLAY DRIVER P15

PNT	SIGNAL NAME	COLOR	LV	TYPE	F
1	+ 0.0				
2	+ 0.0				
3	+ 5.6				
4	+ 5.6				
5	+24.0				
6	+24.0				
7	TM-DSL4				
8	TM-ISL4				
9	TM-DRES				
10	TM-IRES				
11	TM-DRW				
12	TM-IRW				
13	TM-DENB				
14	TM-IENB				
15	TM-DADR2				
16	TM-IADR2				
17	TM-DADR1				
18	TM-IADR1				
19	TM-DADR0				
20	TM-IADR0				
21	TM-SHIR				
22	0.0 VCU				
23	TM-KBIR				
24	0.0 VCU				
25	TM-DATA7				
26	0.0 VCU				
27	TM-DATA6				
28	0.0 VCU				
29	TM-DATA5				
30	0.0 VCU				
31	TM-DATA4				
32	0.0 VCU				
33	TM-DATA3				
34	0.0 VCU				
35	TM-DATA2				
36	0.0 VCU				
37	TM-DATA1				
38	0.0 VCU				
39	TM-DATA0				
40	0.0 VCU				

GRP 20 1.820.704.00 <-- <-- <-- CONTINUATION

ELM 16
PARALLEL REMOTE INTERFACE P16

PNT	SIGNAL NAME	COLOR	LV	TYPE	F
1	+ 0.0				
2	+ 0.0				
3	+ 5.6				
4	+ 5.6				
5	+STABIN4				
6	+STABIN4				
7	TM-DSL5				
8	TM-ISL5				
9	TM-DRES				
10	TM-IRES				
11	TM-DRW				
12	TM-IRW				
13	TM-DENB				
14	TM-IENB				
15	T-REFEXT				
16	0.0 VCU				
17	TC-TCMV				
18	TC-TCDIR				
19	TM-DADR0				
20	TM-IADR0				
21	TM-REMIR				
22	0.0 VCU				
23	TD-MVCLK				
24	TD-MVDIR				
25	TM-DATA7				
26	0.0 VCU				
27	TM-DATA6				
28	0.0 VCU				
29	TM-DATA5				
30	0.0 VCU				
31	TM-DATA4				
32	0.0 VCU				
33	TM-DATA3				
34	0.0 VCU				
35	TM-DATA2				
36	0.0 VCU				
37	TM-DATA1				
38	0.0 VCU				
39	TM-DATA0				
40	0.0 VCU				

GRP 20 1.820.704.00 <-- <-- <-- CONTINUATION

ELM 17
TO HEAD BLOCK ASSEMBLY P17

PNT	SIGNAL NAME	COLOR	LV	TYPE	F
1	+ 0.0				
2	+ 0.0				
3	+ 5.6				
4	+ 5.6				
5	+15.0				
6	-15.0				
7	T-SADA				
8	T-SADB				
9	T-SADC				
10	T-READSL				
11	T-WRTSL				
12	T-DT-RP1				
13	T-DT-RP2				
14	T-DT-SJM				
15	T-DT-MP				
16	T-DT-RES				
17					
18					
19					
20	+ 0.0				
21					
22	+ 0.0				
23					
24	+24.0				
25	+ 0.0				
26	+ 0.0				

./.

```
*****************************************************************************************************************************
*    WILLI STUDER AG   *    L O C A T I O N     P I N     L I S T          * 89/07/20  *   8:15  *   P A G E  26   *
*****************************************************************************************************************************
*                              * TAPE TRANSPORT & AUDIO MCH *                 *  89/04/19 - 00                            *
*****************************************************************************************************************************
ASY  1                         TAPE DECK                                                    <--  <--  <--  CONTINUATION

GRP 20          1.820.704.00
                <--  <--  <--  CONTINUATION
=======================================

ELM 18
    RESERVE                                  P18
---------------------------------------------
PNT SIGNAL NAME  COLOR LV TYPE           F
---------------------------------------------
 1  + 0.0
 2  + 0.0
 3  + 5.6
 4  + 5.6
 5  +15.0
 6  -15.0
 7  T-SADA
 8  T-SADB
 9  T-SADC
10  T-READSL
11  T-WRTSL
12  T-DT-CH1
13  T-DT-CH2
14  T-DT-CH3
15  T-DT-MP
16  T-DT-RES
17
18
19
20  + 0.0
21  T-VARSPD
22  + 0.0
23
24  +24.0
25  + 0.0
26  + 0.0
---------------------------------------------
                                         ./.

GRP 20          1.820.704.00
                <--  <--  <--  CONTINUATION
=======================================

ELM 19
    MECHANICAL ELAPSED TIMER             P19
---------------------------------------------
PNT SIGNAL NAME  COLOR LV TYPE           F
---------------------------------------------
 1  + 0.0
 2  + 0.0
 3  + 5.6
 4  + 5.6
 5  +15.0
 6  -15.0
 7  T-SADA
 8  T-SADB
 9  T-SADC
10  T-READSL
11  T-WRTSL
12  T-DT-CH1
13  T-DT-CH2
14  T-DT-CH3
15  T-DT-MP
16  T-DT-RES
---------------------------------------------

ELM 30
    SSDA INT. SYNCHRONIZER               P20
---------------------------------------------
PNT SIGNAL NAME  COLOR LV TYPE           F
---------------------------------------------
 1  GND
 2  TDS-CLK
 3  SYS-CTS
 4  SYS-RX
 5  SYS-DTR
 6  SYS-TX
 7  TC-EVEN
 8  GND
 9
10
---------------------------------------------
                                         ./.

GRP 20          1.820.704.00
                <--  <--  <--  CONTINUATION
=======================================

ELM 31
    TO SMPTE/EBU CONNECTOR               P21
---------------------------------------------
PNT SIGNAL NAME  COLOR LV TYPE           F
---------------------------------------------
 1  FRMGND
 2  TRANSCM
 3  TRANSA
 4  TRANSB
 5  RECEIVB
 6  RECEIVA
 7  RECEIVCM
 8  FRMGND
 9  SPARE
10
---------------------------------------------

ELM 32
    BASIS BOARD AUDIO CONT. ELM15        P24
---------------------------------------------
PNT SIGNAL NAME  COLOR LV TYPE           F
---------------------------------------------
 1  + 0.0
 2  TD-HEACT
 3  + 0.0
 4  TD-MVDIR
 5  + 0.0
 6  TD-EVENT
 7  + 0.0
 8  TC-EVENT
 9  + 0.0
10  TD-MOVE
11  + 0.0
12  TA-OUTPO
13  + 0.0
14  ADS-CLK
15  + 0.0
16  TD-C307K
17  + 0.0
18  ADS-CTS
19  + 0.0
20  ADS-DTR
21  + 0.0
22  ADS-RX
23  + 0.0
24  ADS-TX
25  + 0.0
26  TM-EVENT
---------------------------------------------
```

```
*****************************************************************************************************************************
*    WILLI STUDER AG   *    L O C A T I O N     P I N     L I S T          * 89/07/20  *   8:15  *   P A G E  27   *
*****************************************************************************************************************************
*                              * TAPE TRANSPORT & AUDIO MCH *                 *  89/04/19 - 00                            *
*****************************************************************************************************************************
ASY  1                         TAPE DECK                                                    <--  <--  <--  CONTINUATION

GRP 20          1.820.704.00
                <--  <--  <--  CONTINUATION
=======================================

ELM 33
    BASIS BOARD AUDIO CONT. ELM16        P25
---------------------------------------------
PNT SIGNAL NAME  COLOR LV TYPE           F
---------------------------------------------
 1  + 0.0
 2  TAD-RESA
 3  + 0.0
 4  TAD-RESB
 5  + 0.0
 6  TAD-RESC
 7  + 0.0
 8
 9  + 0.0
10
11  + 0.0
12
13  + 0.0
14
15  + 0.0
16
17  + 0.0
18
19  + 0.0
20
21  + 0.0
22
23  + 0.0
24
25  + 0.0
26
---------------------------------------------
                                         ./.

GRP 20          1.820.704.00
                <--  <--  <--  CONTINUATION
=======================================

ELM 34
    INT. SYNCHRONIZER
---------------------------------------------
PNT SIGNAL NAME  COLOR LV TYPE           F
---------------------------------------------
 1  TC-SL3
 2  + 0.0
 3  TC-SL4
 4  + 0.0
 5  TC-IRQ
 6  + 0.0
 7  TC-ENBG
 8  + 0.0
 9  TC-RESMP
10  + 0.0
11  + 0.0
12  + 0.0
13  + 0.0
14  + 0.0
15  TC-RW
16  + 0.0
17  TC-ENB
18  + 0.0
19  TC-ADR2
20  + 0.0
21  TC-ADR1
22  + 0.0
23  TC-ADR0
24  + 0.0
25  TC-DATA7
26  + 0.0
27  TC-DATA6
28  + 0.0
29  TC-DATA5
30  + 0.0
31  TC-DATA4
32  + 0.0
33  TC-DATA3
34  + 0.0
35  TC-DATA2
36  + 0.0
37  TC-DATA1
38  + 0.0
39  TC-DATA0
40  + 0.0
---------------------------------------------

GRP 20          1.820.704.00
                <--  <--  <--  CONTINUATION
=======================================

ELM 40          1.820.759.00
    SPOOLING MOTOR DRIVER                J01
---------------------------------------------
PNT SIGNAL NAME  COLOR LV TYPE           F
---------------------------------------------
 1  AN-ICR
 2  AN-IRR
 3  AN-ICR
 4  AN-IRR
 5
 6
 7  PWMPR-H1
 8  PWMPR-L3
 9  AN-ICRD
10  PWMPR-L6
11
12
13
14
15  TD-PENBR
16
17  TD-C76K
18  +15.0
19  KEY
20  + 5.6
21  + 0.0
22  -15.0
23  TD-PENBL
24
25
26  AN-ICL
27  AN-IRL
28  PWMPL-H1
29  PWMPL-L3
30  AN-ICLD
31  PWMPL-L6
32  PWMPL-L5
33  PWMPL-L4
34  PWMPL-H2
35  PWMPL-L1
36  PWMPR-L5
37  PWMPR-L4
38  PWMPR-H2
39  PWMPR-L1
---------------------------------------------
```

WILLI STUDER AG * L O C A T I O N P I N L I S T * 89/07/20 * 8:15 * P A G E 28
* TAPE TRANSPORT & AUDIO MCH * * 89/04/19 - 00

ASY 1 TAPE DECK <-- <-- <-- CONTINUATION

GRP 20 1.820.704.00 <-- <-- <-- CONTINUATION

ELM 41 1.820.764.00
CAPSTAN CONTROL UNIT J02

PNT	SIGNAL NAME	COLOR LV TYPE	F
1	TD-TCM1		
2	TD-TCM2		
3	TC-REFP		
4	TC-CAPDC		
5	TC-TCMVI		
6	TC-CDIRI		
7	TD-CAPSY		
8	TC-REF		
9	TC-INEX		
10	TC-RESMP		
11	TC-ENBG		
12	TC-EVEN		
13	TC-IRQ		
14	TC-EREF		
15	TC-SL4		
16	TC-SL3		
17			
18	+15.0		
19	KEY		
20	+ 5.6		
21	+ 0.0		
22	-15.0		
23	TC-SL2		
24	TC-SL1		
25			
26	TD-CRES		
27	TC-RW		
28	TC-ENB		
29	TC-ADR2		
30	TC-ADR1		
31	TC-ADR0		
32	TC-DATA7		
33	TC-DATA6		
34	TC-DATA5		
35	TC-DATA4		
36	TC-DATA3		
37	TC-DATA2		
38	TC-DATA1		
39	TC-DATA0		

./.

GRP 20 1.820.704.00 <-- <-- <-- CONTINUATION

ELM 42 1.820.727.00
CAPSTAN INTERFACE J03

PNT	SIGNAL NAME	COLOR LV TYPE	F
1A	TC-CDIRI		
1B	TD-TCM1		
2A	TC-TCMVI		
2B	TD-TCM2		
3A	AN-CSPDC		
3B	AN-CSPDC		
4A	TC-EVEN		
4B	TC-REFP		
5A	TC-TCMV		
5B	TC-TCMV		
6A	TC-TCDIR		
6B	TC-TCDIR		
7A			
7B			
8A	TC-RESMP		
8B	TC-ENBG		
9A	TC-IRQ		
9B			
10A			
10B	TC-EREF		
11A	TC-REF		
11B	T-REFINT		
12A	TC-INEX		
12B	T-REFEXT		
13A	TC-SL1		
13B	TD-IRQ		
14A	TC-SL2		
14B	TD-SL7		
15A	+15.0		
15B	+15.0		
16A	+ 5.6		
16B	+ 5.6		
17A	+ 0.0		
17B	+ 0.0		
18A	-15.0		
18B	-15.0		
19A			
19B	TD-RES		
20A	TC-RW		
20B	TD-RW		
21A	TC-ENB		
21B	TD-ENB		
22A	TC-ADR2		
22B			
23A	TC-ADR1		
23B	TD-ADR1		
24A	TC-ADR0		

GRP 20 1.820.704.00 <-- <-- <-- CONTINUATION

ELM 42 1.820.727.00
CAPSTAN INTERFACE

PNT	SIGNAL NAME	COLOR LV TYPE	F
24B	TD-ADR0		
25A	TC-DATA7		
25B	TD-DATA7		
26A	TC-DATA6		
26B	TD-DATA6		
27A	TC-DATA5		
27B	TD-DATA5		
28A	TC-DATA4		
28B	TD-DATA4		
29A	TC-DATA3		
29B	TD-DATA3		
30A	TC-DATA2		
30B	TD-DATA2		
31A	TC-DATA1		
31B	TD-DATA1		
32A	TC-DATA0		
32B	TD-DATA0		

./.

WILLI STUDER AG * L O C A T I O N P I N L I S T * 89/07/20 * 8:15 * P A G E 29
* TAPE TRANSPORT & AUDIO MCH * * 89/04/19 - 00

ASY 1 TAPE DECK <-- <-- <-- CONTINUATION

GRP 20 1.820.704.00 <-- <-- <-- CONTINUATION

ELM 43 1.820.762.00
TAPE DECK PERIPHERY CONTR. J04

PNT	SIGNAL NAME	COLOR LV TYPE	F
1A	TD-RALEN		
1B	TD-RALC1		
2A	TD-RALP2		
2B	TD-RALC2		
3A	TD-RALP1		
3B	TD-RARP1		
4A	TD-MOVE		
4B	TD-RARP2		
5A	TD-EVENT		
5B	TD-RAREN		
6A	TD-CRES		
6B	TD-RARC1		
7A			
7B	TD-RARC2		
8A	TD-SHLD		
8B			
9A	TD-TRSP		
9B	TD-HEACT		
10A	TD-PWENB		
10B	T-SUPVON		
11A	-VSUP		
11B			
12A	+VSUP		
12B			
13A			
13B			
14A			
14B	TD-SL3		
15A	+15.0		
15B	+15.0		
16A	+ 5.6		
16B	+ 5.6		
17A	+ 0.0		
17B	+ 0.0		
18A	-15.0		
18B	-15.0		
19A	T-IRES 2		
19B	TD-RES		
20A	TD-PENBL		

20B	TD-RW
21A	TD-PENBR
21B	TD-ENB
22A	T-IRES 3
22B	TD-ADR2
23A	T-IRES 4
23B	TD-ADR1
24A	

GRP 20 1.820.704.00 <-- <-- <-- CONTINUATION

ELM 43 1.820.762.00
<-- <-- <-- CONTINUATION

PNT	SIGNAL NAME	COLOR LV TYPE	F
24B	TD-ADR0		
25A			
25B	TD-DATA7		
26A			
26B	TD-DATA6		
27A	OC-RES 1		
27B	TD-DATA5		
28A	OC-RES 2		
28B	TD-DATA4		
29A	OC-RES 3		
29B	TD-DATA3		
30A	OC-RES 4		
30B	TD-DATA2		
31A	K-BRAKEL		
31B	TD-DATA1		
32A	K-BRAKER		
32B	TD-DATA0		

./.

GRP 20 1.820.704.00 <-- <-- <-- CONTINUATION

ELM 44 1.820.761.00
TAPE DECK COUNTER / TIMER J05

PNT	SIGNAL NAME	COLOR LV TYPE	F
1	TD-TML1		
2	TD-TML2		
3	TD-TMR1		
4	TD-TMR2		
5			
6	TD-ADR3		
7	TD-MOVE1		
8	TD-MOVE2		
9	TD-ICRE1		
10			
11	TD-ICRE2		
12	TD-MVCLK		
13	TD-IRQ		
14	TD-MVDIR		
15			
16	TD-ICRE3		
17	TD-ICRE4		
18	+15.0		
19	KEY		
20	+ 5.6		
21	+ 0.0		
22	-15.0		
23	TD-ICRE5		
24			
25	TD-SL6		
26	TD-RES		
27	TD-RW		
28	TD-ENB		
29	TD-ADR2		
30	TD-ADR1		
31	TD-ADR0		
32	TD-DATA7		
33	TD-DATA6		
34	TD-DATA5		
35	TD-DATA4		
36	TD-DATA3		
37	TD-DATA2		
38	TD-DATA1		
39	TD-DATA0		

```
*****************************************************************************************************************************
*   WILLI STUDER AG   *   L O C A T I O N     P I N     L I S T           *  89/07/20  *   8:15  *  P A G E  30   *
*****************************************************************************************************************************
*                              * TAPE TRANSPORT & AUDIO MCH *                *  89/04/19 - 00                            *
*****************************************************************************************************************************
ASY  1                          TAPE DECK                                                    <--  <--  <--  CONTINUATION

GRP 20          1.820.704.00                    GRP 20          1.820.704.00                    GRP 20          1.820.704.00
              <--  <--  <--  CONTINUATION                    <--  <--  <--  CONTINUATION                  <--  <--  <--  CONTINUATION
=======================================         =======================================         =======================================

ELM 45          1.820.822.00                    ELM 46          1.820.781.00                    ELM 47          1.820.763.00
    SPOOLING MOTOR CONTROLLER          J06          MP-UNIT TD CONTROL MCH          J07          TAPE DECK SERIAL INTERFACE         J08
---------------------------------------         ---------------------------------------         ---------------------------------------
PNT SIGNAL NAME  COLOR LV TYPE          F       PNT SIGNAL NAME  COLOR LV TYPE          F       PNT SIGNAL NAME  COLOR LV TYPE          F
---------------------------------------         ---------------------------------------         ---------------------------------------
 1  AN-TTL                                       1                                               1  AN-TTL
 2  AN-TTR                                       2                                               2  AN-TTR
 3  AN-TTL                                       3  TD-SL3                                       3  AN-ICL
 4  AN-TTR                                       4  TD-SL2                                       4  AN-ICR
 5                                               5  TD-RESMP                                     5  AN-TTL
 6  AN-IRL                                       6  TD-ADR3                                      6  AN-TTR
 7                                               7  TD-C614K                                     7  AN-RES1
 8  AN-IRR                                       8  TD-BUSSW                                     8  AN-RES2
 9                                               9  TD-NMI                                       9  AN-RES3
10                                              10  TD-RX                                       10  AN-RES4
11                                              11  TD-TX                                       11  TD-RESMP
12                                              12  TD-DRENB                                    12  TD-IRQ
13                                              13  TD-IRQ                                      13  TDS-RX
14                                              14  T-PWRON                                     14  TDS-TX
15                                              15  TD-SL7                                      15  TDS-DTR
16                                              16  TD-C76K                                     16  TDS-CTS
17                                              17  TD-9600                                     17  TDS-CLK
18  +15.0                                       18  +15.0                                       18  +15.0
19  KEY                                         19  KEY                                         19  KEY
20  + 5.6                                       20  + 5.6                                       20  + 5.6
21  + 0.0                                       21  + 0.0                                       21  + 0.0
22  -15.0                                       22  TD-C307K                                    22  -15.0
23  TD-SL4                                      23  TD-SL4                                      23  TD-RESET
24                                              24  TD-SL5                                      24  TD-ADR3
25                                              25  TD-SL6                                      25  TD-SL5
26  TD-RES                                      26  TD-RESET                                    26  TD-RES
27  TD-RW                                       27  TD-RW                                       27  TD-RW
28  TD-ENB                                      28  TD-ENB                                      28  TD-ENB
29  TD-ADR2                                     29  TD-ADR2                                     29  TD-ADR2
30  TD-ADR1                                     30  TD-ADR1                                     30  TD-ADR1
31  TD-ADR0                                     31  TD-ADR0                                     31  TD-ADR0
32  TD-DATA7                                    32  TD-DATA7                                    32  TD-DATA7
33  TD-DATA6                                    33  TD-DATA6                                    33  TD-DATA6
34  TD-DATA5                                    34  TD-DATA5                                    34  TD-DATA5
35  TD-DATA4                                    35  TD-DATA4                                    35  TD-DATA4
36  TD-DATA3                                    36  TD-DATA3                                    36  TD-DATA3
37  TD-DATA2                                    37  TD-DATA2                                    37  TD-DATA2
38  TD-DATA1                                    38  TD-DATA1                                    38  TD-DATA1
39  TD-DATA0                                    39  TD-DATA0                                    39  TD-DATA0
---------------------------------------         ---------------------------------------         ---------------------------------------
```

```
*****************************************************************************************************************************
*   WILLI STUDER AG   *   L O C A T I O N     P I N     L I S T           *  89/07/20  *   8:15  *  P A G E  31   *
*****************************************************************************************************************************
*                              * TAPE TRANSPORT & AUDIO MCH *                *  89/04/19 - 00                            *
*****************************************************************************************************************************
ASY  1                          TAPE DECK                                                    <--  <--  <--  CONTINUATION

GRP 20          1.820.704.00                    GRP 20          1.820.704.00                    GRP 20          1.820.704.00
              <--  <--  <--  CONTINUATION                    <--  <--  <--  CONTINUATION                  <--  <--  <--  CONTINUATION
=======================================         =======================================         =======================================

ELM 48          1.820.753.00                    ELM 48          1.820.753.00                    ELM 49          1.820.784.00
    MASTER SERIAL INTERFACE            J09                                  CONTINUATION          MP-UNIT MASTER MCH              J10
---------------------------------------         ---------------------------------------         ---------------------------------------
PNT SIGNAL NAME  COLOR LV TYPE          F       PNT SIGNAL NAME  COLOR LV TYPE          F       PNT SIGNAL NAME  COLOR LV TYPE          F
---------------------------------------         ---------------------------------------         ---------------------------------------
 1A TM-DSL4                                     24B TM-IRQ                                       1  TD-EVENT
 1B TM-ISL4                                     25A TD-MVDIR                                     2  TM-EVENT
 2A TM-DSL5                                     25B TD-MVCLK                                     3  TM-SL3
 2B TM-ISL5                                     26A TM-RESET                                     4  TM-SL2
 3A TM-DRES                                     26B TM-RW                                        5  TM-RESMP
 3B TM-IRES                                     27A TM-ENB                                       6  TM-ADR3
 4A TM-DRW                                      27B TM-ADR2                                      7  TM-C614K
 4B TM-IRW                                      28A TM-ADR1                                      8  TM-BUSSW
 5A TM-DENB                                     28B TM-ADR0                                      9  TM-NMI
 5B TM-IENB                                     29A TM-DATA7                                    10  TM-RX
 6A TM-DADR2                                    29B TM-DATA6                                    11  TM-TX
 6B TM-IADR2                                    30A TM-DATA5                                    12  TM-DRENB
 7A TM-DADR1                                    30B TM-DATA4                                    13  TM-IRQ
 7B TM-IADR1                                    31A TM-DATA3                                    14  T-PWRON
 8A TM-DADR0                                    31B TM-DATA2                                    15  TM-SL7
 8B TM-IADR0                                    32A TM-DATA1                                    16  TM-C76K
 9A TM-SL4                                      32B TM-DATA0                                    17  TM-C9600
 9B TM-SL5                                     ---------------------------------------          18  +15.0
10A TDS-RX                                                                          ./.          19  KEY
10B TDS-TX                                                                                       20  + 5.6
11A TDS-DTR                                                                                      21  + 0.0
11B TDS-CTS                                                                                      22  TM-C307K
12A SYS-RX                                                                                       23  TM-SL4
12B SYS-TX                                                                                       24  TM-SL5
13A SYS-DTR                                                                                      25  TM-SL6
13B SYS-CTS                                                                                      26  TM-RESET
14A TM-SHIR                                                                                      27  TM-RW
14B TM-KBIR                                                                                      28  TM-ENB
15A +15.0                                                                                        29  TM-ADR2
15B +15.0                                                                                        30  TM-ADR1
16A + 5.6                                                                                        31  TM-ADR0
16B + 5.6                                                                                        32  TM-DATA7
17A + 0.0                                                                                        33  TM-DATA6
17B + 0.0                                                                                        34  TM-DATA5
18A -15.0                                                                                        35  TM-DATA4
18B -15.0                                                                                        36  TM-DATA3
19A TDS-CLK                                                                                      37  TM-DATA2
19B TM-REMIR                                                                                     38  TM-DATA1
20A TD-HEACT                                                                                     39  TM-DATA0
20B TM-SEIR                                                                                     ---------------------------------------
21A TD-MOVE
21B TA-AUIR
22A TD-CAPSY
22B TM-SL2
23A TM-RESMP
23B TM-ADR3
24A TM-RES
```

```
*****************************************************************************************************************
*    WILLI STUDER AG    *    L O C A T I O N    P I N    L I S T          * 89/07/20 *  8:15  *  P A G E  32   *
*****************************************************************************************************************
*                              * TAPE TRANSPORT & AUDIO MCH *              * 89/04/19 - 00                      *
*****************************************************************************************************************
ASY  1                         TAPE DECK                                                  <--  <--  <--  CONTINUATION

GRP 20          1.820.704.00
                <--  <--  <--  CONTINUATION
==========================================

ELM 50          1.820.751.00
    SMPTE/EBU INTERFACE                    J11
------------------------------------------
PNT SIGNAL NAME  COLOR LV TYPE          F
------------------------------------------
 1  FRMGND
 2  TRANSCM
 3  TRANSA
 4  TRANSB
 5  RECEIVB
 6  RECEIVA
 7  RECEIVCM
 8  FRMGND
 9  RCV-232
10  TM-RX
11  TM-TX
12  TM-DRENB
13  TM-SEIR
14  SND-232
15  TM-BUSSW
16  TM-SL3
17  TM-ADR3
18  +15.0
19  KEY
20  + 5.6
21  + 0.0
22  -15.0
23  TM-SL4
24  TM-SL5
25  TM-SL6
26  TM-RES
27  TM-RW
28  TM-ENB
29  TM-ADR2
30  TM-ADR1
31  TM-ADR0
32  TM-DATA7
33  TM-DATA6
34  TM-DATA5
35  TM-DATA4
36  TM-DATA3
37  TM-DATA2
38  TM-DATA1
39  TM-DATA0
------------------------------------------
                                       ./.

GRP 20          1.820.704.00
                <--  <--  <--  CONTINUATION
==========================================

ELM 51          1.820.756.00
    MASTER TO AUDIO INTERFACE              J12
------------------------------------------
PNT SIGNAL NAME  COLOR LV TYPE          F
------------------------------------------
 1A T-SADA
 1B T-SADB
 2A T-SADC
 2B T-READSL
 3A T-WRTSL
 3B T-DT-CH1
 4A T-DT-CH2
 4B T-DT-CH3
 5A T-DT-MP
 5B T-DT-RP1
 6A T-DT-RP2
 6B TC-EVENT
 7A T-DT-SJM
 7B
 8A T-DT-RES
 8B
 9A
 9B ADS-CLK
10A T-REFEXT
10B
11A TA-AUIR
11B ADS-CTS
12A
12B ADS-DTR
13A
13B ADS-RX
14A TM-SL6
14B ADS-TX
15A
15B
16A + 0.0
16B + 0.0
17A
17B
18A + 5.6
18B + 5.6
19A TM-RES
19B TC-EVEN
20A TM-RW
20B TAD-RESA
21A TM-ENB
21B TAD-RESB
22A TM-ADR2
22B TAD-RESC
23A TM-ADR1
23B
24A TM-ADR0

GRP 20          1.820.704.00
                <--  <--  <--  CONTINUATION
==========================================

ELM 51          1.820.756.00
                <--  <--  <--  CONTINUATION
------------------------------------------
PNT SIGNAL NAME  COLOR LV TYPE          F
------------------------------------------
24B
25A TM-DATA7
25B
26A TM-DATA6
26B
27A TM-DATA5
27B
28A TM-DATA4
28B
29A TM-DATA3
29B
30A TM-DATA2
30B
31A TM-DATA1
31B
32A TM-DATA0
32B
------------------------------------------

ELM 60
    WIRE FIELD (FROM GRP20, ELM70)
------------------------------------------
PNT SIGNAL NAME  COLOR LV TYPE          F
------------------------------------------
 1  + 0.0        0        L
 2  + 0.0        0        L
 3  + 0.0        0        L
------------------------------------------

ELM 61
    WIRE FIELD (FROM GRP20, ELM70)
------------------------------------------
PNT SIGNAL NAME  COLOR LV TYPE          F
------------------------------------------
 1  -26.0        9        L
 2  +26.0        1        L
 3  + 0.0        0        L
 4  + 0.0        0        L
 5  +0.0SENS     0        L
 6  + 0.0        0        L
 7  + 0.0        0        L
 8  + 0.0        0        L
 9  -15.0        6        L
10  +15.0        2        L
------------------------------------------
                                       ./.
```

```
*****************************************************************************************************************
*    WILLI STUDER AG    *    L O C A T I O N    P I N    L I S T          * 89/07/20 *  8:15  *  P A G E  33   *
*****************************************************************************************************************
*                              * TAPE TRANSPORT & AUDIO MCH *              * 89/04/19 - 00                      *
*****************************************************************************************************************
ASY  1                         TAPE DECK                                                  <--  <--  <--  CONTINUATION

GRP 20          1.820.704.00
                <--  <--  <--  CONTINUATION
==========================================

ELM 62
    WIRE FIELD
------------------------------------------
PNT SIGNAL NAME  COLOR LV TYPE          F
------------------------------------------
 1  + 5.6        3        L
 2  + 5.6        3        L
 3  +5.6SENS     4        L
 4  +STABIN1     3        U
 5  +STABIN2     5        U
 6  +STABIN3     2        L
 7  +STABIN3     2        L
 8  OSTABIN      4        L
 9  OSTABIN      4        L
10  +STABIN4     8        L
11  +24.0        7        U
12  +24.0        7        U
13  +24.0        7        U
14  T-PWRON      5        U
15  TD-C76K      9        U
------------------------------------------

ELM 63
    WIRE FIELD (TO BRAKE SOLENOIDS)
------------------------------------------
PNT SIGNAL NAME  COLOR LV TYPE          F
------------------------------------------
 1  K-BRAKEL     1        U
 2  K-BRAKER     4        U
------------------------------------------
                                       ./.

GRP 20          1.820.704.00
                <--  <--  <--  CONTINUATION
==========================================

ELM 70
    FROM GRP35, ELM59                      J13
------------------------------------------
PNT SIGNAL NAME  COLOR LV TYPE          F
------------------------------------------
 1  + 5.6        3        F
 2  + 5.6        3        F
 3  +5.6SENS     4        F
 4  TD-C76K      9        F
 5  + 0.0        0        F
 6  + 0.0        0        F
 7  T-PWRON      5        F
 8  + 0.0        0        F
 9  + 0.0        0        F
10  + 0.0        0        F
11  +15.0        2        F
12  -15.0        6        F
13  + 0.0        0        F
14  + 0.0        0        F
15  +24.0        7        F
16  +STABIN4     8        F
17  +STABIN1     3        F
18  +STABIN2     5        F
19  -26.0        9        F
20  +26.0        1        F
21  + 0.0        0        F
22  +0.0SENS     0        F
23  OSTABIN      4        F
24  +STABIN3     2        F
------------------------------------------

ELM 71
    TO CAPSTAN MOTOR DRIVE AMPLIFIER P24
------------------------------------------
PNT SIGNAL NAME  COLOR LV TYPE          F
------------------------------------------
 1  OSTABIN      4        F
 2
 3
 4
 5
 6  +STABIN3     2        F
------------------------------------------

ELM 72
    TO BRAKE SOLENOID, LEFT                P25
------------------------------------------
PNT SIGNAL NAME  COLOR LV TYPE          F
------------------------------------------
 1  +24.0        7        F
 2  K-BRAKEL     1        F
 3
------------------------------------------

GRP 20          1.820.704.00
                <--  <--  <--  CONTINUATION
==========================================

ELM 73
    TO BRAKE SOLENOID, RIGHT               P26
------------------------------------------
PNT SIGNAL NAME  COLOR LV TYPE          F
------------------------------------------
 1  +24.0        7        F
 2  K-BRAKER     4        F
 3
------------------------------------------
```

```
*****************************************************************************************************************************
*    WILLI STUDER AG    *    L O C A T I O N     P I N     L I S T                *  89/07/20  *   8:15  *  P A G E  34    *
*****************************************************************************************************************************
*                              * TAPE TRANSPORT & AUDIO MCH *                     *  89/04/19 - 00                          *
*****************************************************************************************************************************
ASY  1                          TAPE DECK                                                          <--  <--  <--  CONTINUATION

GRP 21        1.820.702.00
    BASIS BOARD                AUDIO CONTROL
=======================================

ELM  1
    CONNECTOR STUDIOBUS                                  J02
---------------------------------------
PNT SIGNAL NAME  COLOR LV TYPE            F
---------------------------------------
 1  PNLBUS1
 2  + 0.0
 3  PNLBUS2
---------------------------------------

ELM  2
    CONNECTOR STUDIOBUS                                  J03
---------------------------------------
PNT SIGNAL NAME  COLOR LV TYPE            F
---------------------------------------
 1  PNLBUS1
 2  + 0.0
 3  PNLBUS2
---------------------------------------

ELM  3
    CONNECTOR STUDIOBUS                                  J04
---------------------------------------
PNT SIGNAL NAME  COLOR LV TYPE            F
---------------------------------------
 1  PNLBUS1
 2  + 0.0
 3  PNLBUS2
---------------------------------------

ELM  4
                                                         P01
---------------------------------------
PNT SIGNAL NAME  COLOR LV TYPE            F
---------------------------------------
 1  TS-RX
---------------------------------------

ELM  5
                                                         P02
---------------------------------------
PNT SIGNAL NAME  COLOR LV TYPE            F
---------------------------------------
 1  TS-TX
---------------------------------------

ELM  6
                                                         P03
---------------------------------------
PNT SIGNAL NAME  COLOR LV TYPE            F
---------------------------------------
 1  + 0.0
---------------------------------------

GRP 21        1.820.702.00
              <--  <--  <--  CONTINUATION
=======================================

ELM  7
                                                         P04
---------------------------------------
PNT SIGNAL NAME  COLOR LV TYPE            F
---------------------------------------
 1  + 0.0
---------------------------------------

ELM  8
    FROM GRP35, ELM61                                    J01
---------------------------------------
PNT SIGNAL NAME  COLOR LV TYPE            F
---------------------------------------
 1  + 5.6                  BX
 2                         BX
 3  + 0.0                  BX
 4  + 0.0                  BX
 5  +15.0                  BX
 6                         BX
 7  -15.0                  BX
 8                         BX
 9  T-PWRON                BX
10  +24.0NRS               BX
---------------------------------------

ELM 10
    TO GRP24, ELM03                                      P05
---------------------------------------
PNT SIGNAL NAME  COLOR LV TYPE            F
---------------------------------------
 1  B-RCD-01
 2
 3  B-RCD-02
 4  B-RCD-06
 5  B-RCD-03
 6  B-RCD-07
 7
 8
 9  B-RCD-04
10  B-RCD-08
11  B-RCD-05
12  +24.0
13
14  +0.0
15
16
---------------------------------------

GRP 21        1.820.702.00
              <--  <--  <--  CONTINUATION
=======================================

ELM 11
    TO GRP24, ELM02                                      P06
---------------------------------------
PNT SIGNAL NAME  COLOR LV TYPE            F
---------------------------------------
 1  B-RCD-09
 2
 3  B-RCD-10
 4  B-RCD-14
 5  B-RCD-11
 6  B-RCD-15
 7
 8
 9  B-RCD-12
10  B-RCD-16
11  B-RCD-13
12  +24.0
13
14  +0.0
15
16
---------------------------------------

ELM 12
    TO GRP24, ELM01                                      P07
---------------------------------------
PNT SIGNAL NAME  COLOR LV TYPE            F
---------------------------------------
 1  B-RCD-17
 2
 3  B-RCD-18
 4  B-RCD-22
 5  B-RCD-19
 6  B-RCD-23
 7
 8
 9  B-RCD-20
10  B-RCD-24
11  B-RCD-21
12  +24.0
13
14  +0.0
15
16
---------------------------------------
```

```
*****************************************************************************************************************************
*    WILLI STUDER AG    *    L O C A T I O N     P I N     L I S T                *  89/07/20  *   8:15  *  P A G E  35    *
*****************************************************************************************************************************
*                              * TAPE TRANSPORT & AUDIO MCH *                     *  89/04/19 - 00                          *
*****************************************************************************************************************************
ASY  1                          TAPE DECK                                                          <--  <--  <--  CONTINUATION

GRP 21        1.820.702.00
              <--  <--  <--  CONTINUATION
=======================================

ELM 15
    TAPE DECK BASIS BOARD, ELM32                         P08
---------------------------------------
PNT SIGNAL NAME  COLOR LV TYPE            F
---------------------------------------
 1  + 0.0
 2  TD-HEACT
 3  + 0.0
 4  TD-MVDIR
 5  + 0.0
 6  TD-EVENT
 7  + 0.0
 8  TG-EVENT
 9  + 0.0
10  TD-MOVE
11  + 0.0
12  TA-OUTPO
13  + 0.0
14  ADS-CLK
15  + 0.0
16  TD-C307K
17  + 0.0
18  ADS-CTS
19  + 0.0
20  ADS-DTR
21  + 0.0
22  ADS-RX
23  + 0.0
24  ADS-TX
25  + 0.0
26  TM-EVENT
---------------------------------------
                                                      ./.

GRP 21        1.820.702.00
              <--  <--  <--  CONTINUATION
=======================================

ELM 16
    TAPE DECK BASIS BOARD, ELM33                         P09
---------------------------------------
PNT SIGNAL NAME  COLOR LV TYPE            F
---------------------------------------
 1  + 0.0
 2  TAD-RESA
 3  + 0.0
 4  TAD-RESB
 5  + 0.0
 6  TAD-RESC
 7  + 0.0
 8
 9  + 0.0
10
11  + 0.0
12
13  + 0.0
14
15  + 0.0
16
17  + 0.0
18
19  + 0.0
20
21  + 0.0
22
23  + 0.0
24
25  + 0.0
26
---------------------------------------
                                                      ./.

GRP 21        1.820.702.00
              <--  <--  <--  CONTINUATION
=======================================

ELM 20        1.820.718.00
    COMMUNICATIONS CONTROLLER                            J05
---------------------------------------
PNT SIGNAL NAME  COLOR LV TYPE            F
---------------------------------------
 1  TD-HEACT
 2  TD-MVDIR
 3  TD-MOVE
 4  TA-OUTPO
 5  A-PNRDT
 6  A-PNTDT
 7  TS-TX
 8  TS-RX
 9  ADS-TX
10  ADS-CLK
11  ADS-DTR
12  ADS-RX
13  ADS-CTS
14  TA-IRQ
15  TA-RX
16  TA-TX
17  TA-C614K
18  +15.0
19  KEY
20  + 5.6
21  + 0.0
22  -15.0
23  PNLBUS1
24  PNLBUS2
25  TA-SL7
26  TA-RESMP
27  TA-RW
28  TA-ENB
29  TA-ADR2
30  TA-ADR1
31  TA-ADR0
32  TA-DATA7
33  TA-DATA6
34  TA-DATA5
35  TA-DATA4
36  TA-DATA3
37  TA-DATA2
38  TA-DATA1
39  TA-DATA0
---------------------------------------
```

```
*****************************************************************************************************************************
*    WILLI STUDER AG    *    L O C A T I O N     P I N     L I S T            *  89/07/20  *   8:15  *  P A G E  36   *
*****************************************************************************************************************************
*                              * TAPE TRANSPORT & AUDIO MCH *                  *  89/04/19 - 00                          *
*****************************************************************************************************************************
ASY  1                          TAPE DECK                                                          <--  <--  <--  CONTINUATION

GRP 21         1.820.702.00                  GRP 21         1.820.702.00                  GRP 21         1.820.702.00
              <--  <--  <--  CONTINUATION                   <--  <--  <--  CONTINUATION                <--  <--  <--  CONTINUATION
=======================================    =======================================    =======================================

ELM 21         1.820.782.00                ELM 22         1.820.725.00                ELM 23         1.820.816.00
    MPU AUDIO CONTROL MCH          J06         GENERATOR UNIT MCH             J07         CONTROLLER EXTERNAL NRS        J08
---------------------------------------    ---------------------------------------    ---------------------------------------
PNT SIGNAL NAME  COLOR LV TYPE       F     PNT SIGNAL NAME  COLOR LV TYPE       F     PNT SIGNAL NAME  COLOR LV TYPE       F
---------------------------------------    ---------------------------------------    ---------------------------------------
 1  TD-EVENT                               1                                          1A
 2  TC-EVENT                               2  TONGEN                                  1B
 3  TA-SL3                                 3                                          2A
 4  TA-SL2                                 4                                          2B
 5  TA-RESMP                               5                                          3A
 6  TA-ADR3                                6                                          3B
 7                                         7                                          4A
 8  TM-EVENT                               8                                          4B + 0.0
 9  TA-NMI                                 9                                          5A
10  TA-RX                                 10                                          5B
11  TA-TX                                 11                                          6A B-RCD-01
12  TA-DRENB                              12  SGNGND                                  6B B-RCD-02
13  TA-IRQ                                13  REFLEV                                  7A B-RCD-06
14  T-PWRON                               14                                          7B B-RCD-03
15  TA-SL7                                15                                          8A B-RCD-07
16  TA-C76K                               16                                          8B B-RCD-04
17                                        17                                          9A B-RCD-08
18                                        18  +15.0                                   9B B-RCD-05
19  KEY                                   19  KEY                                    10A
20  + 5.6                                 20  + 5.6                                  10B
21  + 0.0                                 21  + 0.0                                  11A
22  TA-C614K                              22  -15.0                                  11B
23  TA-SL4                                23                                         12A
24  TA-SL5                                24                                         12B + 0.0
25  TA-SL6                                25  TA-SL6                                 13A
26  TA-RESET                              26                                         13B
27  TA-RW                                 27  TA-RW                                  14A B-RCD-09
28  TA-ENB                                28  TA-ENB                                 14B B-RCD-10
29  TA-ADR2                               29  TA-ADR2                                15A B-RCD-14
30  TA-ADR1                               30  TA-ADR1                                15B B-RCD-11
31  TA-ADR0                               31  TA-ADR0                                16A B-RCD-15
32  TA-DATA7                              32  TA-DATA7                               16B B-RCD-12
33  TA-DATA6                              33  TA-DATA6                               17A B-RCD-16
34  TA-DATA5                              34  TA-DATA5                               17B B-RCD-13
35  TA-DATA4                              35  TA-DATA4                               18A
36  TA-DATA3                              36  TA-DATA3                               18B
37  TA-DATA2                              37  TA-DATA2                               19A
38  TA-DATA1                              38  TA-DATA1                               19B
39  TA-DATA0                              39  TA-DATA0                               20A
---------------------------------------    ---------------------------------------    20B + 5.6
                                  ./.                                        ./.     21A B-RCD-17
                                                                                     21B B-RCD-18
                                                                                     22A B-RCD-22
                                                                                     22B B-RCD-19
                                                                                     23A B-RCD-23
                                                                                     23B B-RCD-20
                                                                                     24A B-RCD-24

*****************************************************************************************************************************
*    WILLI STUDER AG    *    L O C A T I O N     P I N     L I S T            *  89/07/20  *   8:15  *  P A G E  37   *
*****************************************************************************************************************************
*                              * TAPE TRANSPORT & AUDIO MCH *                  *  89/04/19 - 00                          *
*****************************************************************************************************************************
ASY  1                          TAPE DECK                                                          <--  <--  <--  CONTINUATION

GRP 21         1.820.702.00                  GRP 21         1.820.702.00                  GRP 21         1.820.702.00
              <--  <--  <--  CONTINUATION                   <--  <--  <--  CONTINUATION                <--  <--  <--  CONTINUATION
=======================================    =======================================    =======================================

ELM 23         1.820.816.00                ELM 24         1.820.723.00                ELM 24         1.820.723.00
              <--  <--  <--  CONTINUATION       BUS DRIVER MCH                 J09                <--  <--  <--  CONTINUATION
---------------------------------------    ---------------------------------------    ---------------------------------------
PNT SIGNAL NAME  COLOR LV TYPE       F     PNT SIGNAL NAME  COLOR LV TYPE       F     PNT SIGNAL NAME  COLOR LV TYPE       F
---------------------------------------    ---------------------------------------    ---------------------------------------
24B B-RCD-21                               1A T-CLP-AB                                16C T-DT7-CD
25A TA-RESMP                               1B T-AOP-AB                                17A T-CLP-EF
25B TA-SL2                                 1C T-AON-AB                                17B T-AOP-EF
26A TA-RW                                  2A T-CLN-AB                                17C T-AON-EF
26B TA-ENB                                 2B T-A1P-AB                                18A T-CLN-EF
27A TA-ADR3                                2C T-A1N-AB                                18B T-A1P-EF
27B TA-ADR2                                3A                                         18C T-A1N-EF
28A TA-ADR1                                3B T-RWP-AB                                19A
28B TA-ADR0                                3C T-RWN-AB                                19B T-RWP-EF
29A TA-DATA7                               4A                                         19C T-RWN-EF
29B TA-DATA6                               4B T-SL-AB                                 20A
30A TA-DATA5                               4C + 0.0                                   20B T-SL-EF
30B TA-DATA4                               5A                                         20C + 5.6
31A TA-DATA3                               5B T-DT0-AB                                21A
31B TA-DATA2                               5C T-DT1-AB                                21B T-DT0-EF
32A TA-DATA1                               6A                                         21C T-DT1-EF
32B TA-DATA0                               6B T-DT2-AB                                22A
---------------------------------------    6C T-DT3-AB                                22B T-DT2-EF
                                  ./.      7A                                         22C T-DT3-EF
                                           7B T-DT4-AB                                23A
                                           7C T-DT5-AB                                23B T-DT4-EF
                                           8A                                         23C T-DT5-EF
                                           8B T-DT6-AB                                24A
                                           8C T-DT7-AB                                24B T-DT6-EF
                                           9A T-CLP-CD                                24C T-DT7-EF
                                           9B T-AOP-CD                                25A
                                           9C T-AON-CD                                25B TA-RESET
                                          10A T-CLN-CD                                25C TA-SL4
                                          10B T-A1P-CD                                26A
                                          10C T-A1N-CD                                26B TA-RW
                                          11A                                         26C TA-ENB
                                          11B T-RWP-CD                                27A
                                          11C T-RWN-CD                                27B TA-ADR3
                                          12A                                         27C TA-ADR2
                                          12B T-SL-CD                                 28A
                                          12C + 0.0                                   28B TA-ADR1
                                          13A                                         28C TA-ADR0
                                          13B T-DT0-CD                                29A
                                          13C T-DT1-CD                                29B TA-DATA7
                                          14A                                         29C TA-DATA6
                                          14B T-DT2-CD                                30A
                                          14C T-DT3-CD                                30B TA-DATA5
                                          15A                                         30C TA-DATA4
                                          15B T-DT4-CD                                31A
                                          15C T-DT5-CD                                31B TA-DATA3
                                          16A                                         31C TA-DATA2
                                          16B T-DT6-CD                                32A TD-C307K
```

```
*****************************************************************************************************************************************
*   WILLI STUDER AG   *   L O C A T I O N   P I N   L I S T                 * 89/07/20 *  8:15 *  P A G E  38  *
*****************************************************************************************************************************************
*                         * TAPE TRANSPORT & AUDIO MCH *                    * 89/04/19 - 00                                            *
*****************************************************************************************************************************************
ASY  1                    TAPE DECK                                                                  <--  <--  <--  CONTINUATION

GRP 21        1.820.702.00
            <--  <--  <--  CONTINUATION
=====================================

ELM 24        1.820.723.00
            <--  <--  <--  CONTINUATION
-------------------------------------
PNT SIGNAL NAME  COLOR LV TYPE        F
-------------------------------------
32B TA-DATA1
32C TA-DATAO
-------------------------------------
                                   ./.

GRP 21        1.820.702.00
            <--  <--  <--  CONTINUATION
=====================================

ELM 50
    TO AUDIO RACK CH  1 TO  8         P10
-------------------------------------
PNT SIGNAL NAME  COLOR LV TYPE        F
-------------------------------------
 1  + 0.0
 2  + 0.0
 3  + 5.6
 4  + 5.6
 5  +15.0
 6  -15.0
 7  TONGEN
 8  SGNGND
 9  REFLEV
10  + 0.0
11  T-CLP-AB
12  T-CLN-AB
13  + 0.0
14  T-AOP-AB
15  T-AON-AB
16  + 0.0
17  T-A1P-AB
18  T-A1N-AB
19  + 0.0
20  T-RWP-AB
21  T-RWN-AB
22  + 0.0
23  T-SL-AB
24  + 0.0
25  T-DTO-AB
26  + 0.0
27  T-DT1-AB
28  + 0.0
29  T-DT2-AB
30  + 0.0
31  T-DT3-AB
32  + 0.0
33  T-DT4-AB
34  + 0.0
35  T-DT5-AB
36  + 0.0
37  T-DT6-AB
38  + 0.0
39  T-DT7-AB
40  + 0.0
-------------------------------------

GRP 21        1.820.702.00
            <--  <--  <--  CONTINUATION
=====================================

ELM 51
    TO AUDIO RACK CH  9 TO 16         P11
-------------------------------------
PNT SIGNAL NAME  COLOR LV TYPE        F
-------------------------------------
 1  + 0.0
 2  + 0.0
 3  + 5.6
 4  + 5.6
 5  +15.0
 6  -15.0
 7  TONGEN
 8  SGNGND
 9  REFLEV
10  + 0.0
11  T-CLP-CD
12  T-CLN-CD
13  + 0.0
14  T-AOP-CD
15  T-AON-CD
16  + 0.0
17  T-A1P-CD
18  T-A1N-CD
19  + 0.0
20  T-RWP-CD
21  T-RWN-CD
22  + 0.0
23  T-SL-CD
24  + 0.0
25  T-DTO-CD
26  + 0.0
27  T-DT1-CD
28  + 0.0
29  T-DT2-CD
30  + 0.0
31  T-DT3-CD
32  + 0.0
33  T-DT4-CD
34  + 0.0
35  T-DT5-CD
36  + 0.0
37  T-DT6-CD
38  + 0.0
39  T-DT7-CD
40  + 0.0
-------------------------------------
```

```
*****************************************************************************************************************************************
*   WILLI STUDER AG   *   L O C A T I O N   P I N   L I S T                 * 89/07/20 *  8:15 *  P A G E  39  *
*****************************************************************************************************************************************
*                         * TAPE TRANSPORT & AUDIO MCH *                    * 89/04/19 - 00                                            *
*****************************************************************************************************************************************
ASY  1                    TAPE DECK                                                                  <--  <--  <--  CONTINUATION

GRP 21        1.820.702.00
            <--  <--  <--  CONTINUATION
=====================================

ELM 52
    TO AUDIO RACK CH 17 TO 24         P12
-------------------------------------
PNT SIGNAL NAME  COLOR LV TYPE        F
-------------------------------------
 1  + 0.0
 2  + 0.0
 3  + 5.6
 4  + 5.6
 5  +15.0
 6  -15.0
 7  TONGEN
 8  SGNGND
 9  REFLEV
10  + 0.0
11  T-CLP-EF
12  T-CLN-EF
13  + 0.0
14  T-AOP-EF
15  T-AON-EF
16  + 0.0
17  T-A1P-EF
18  T-A1N-EF
19  + 0.0
20  T-RWP-EF
21  T-RWN-EF
22  + 0.0
23  T-SL-EF
24  + 0.0
25  T-DTO-EF
26  + 0.0
27  T-DT1-EF
28  + 0.0
29  T-DT2-EF
30  + 0.0
31  T-DT3-EF
32  + 0.0
33  T-DT4-EF
34  + 0.0
35  T-DT5-EF
36  + 0.0
37  T-DT6-EF
38  + 0.0
39  T-DT7-EF
40  + 0.0
-------------------------------------

GRP 22        1.820.802.00
    BASIS BOARD AUDIO CTR. + BACK UP OP.
=====================================

ELM  1
    CONNECTOR STUDIOBUS               J02
-------------------------------------
PNT SIGNAL NAME  COLOR LV TYPE        F
-------------------------------------
 1  PNLBUS1
 2  + 0.0
 3  PNLBUS2
-------------------------------------

ELM  2
    CONNECTOR STUDIOBUS               J03
-------------------------------------
PNT SIGNAL NAME  COLOR LV TYPE        F
-------------------------------------
 1  PNLBUS1
 2  + 0.0
 3  PNLBUS2
-------------------------------------

ELM  3
    CONNECTOR STUDIOBUS               J04
-------------------------------------
PNT SIGNAL NAME  COLOR LV TYPE        F
-------------------------------------
 1  PNLBUS1
 2  + 0.0
 3  PNLBUS2
-------------------------------------

ELM  4
                                      P01
-------------------------------------
PNT SIGNAL NAME  COLOR LV TYPE        F
-------------------------------------
 1  TS-RX
-------------------------------------

ELM  5
                                      P02
-------------------------------------
PNT SIGNAL NAME  COLOR LV TYPE        F
-------------------------------------
 1  TS-TX
-------------------------------------

ELM  6
                                      P03
-------------------------------------
PNT SIGNAL NAME  COLOR LV TYPE        F
-------------------------------------
 1  + 0.0
-------------------------------------

GRP 22        1.820.802.00
            <--  <--  <--  CONTINUATION
=====================================

ELM  7
                                      P04
-------------------------------------
PNT SIGNAL NAME  COLOR LV TYPE        F
-------------------------------------
 1  + 0.0
-------------------------------------

ELM  8
    FROM GRP35, ELM61                 J01
-------------------------------------
PNT SIGNAL NAME  COLOR LV TYPE        F
-------------------------------------
 1  + 5.6                 BX
 2                        BX
 3  + 0.0                 BX
 4  + 0.0                 BX
 5  +15.0                 BX
 6                        BX
 7  -15.0                 BX
 8                        BX
 9  T-PWRON               BX
10  +24.0NRS              BX
-------------------------------------

ELM  9
    POWER SUPPLY FLOPPY TD            J11
-------------------------------------
PNT SIGNAL NAME  COLOR LV TYPE        F
-------------------------------------
 1  + 5.0                 BX
 2  + 0.0                 BX
 3  + 0.0                 BX
 4  +12.0                 BX
-------------------------------------
                                   ./.
```

```
*    WILLI STUDER AG    *    L O C A T I O N     P I N     L I S T            *  89/07/20  *   8:15  *   P A G E  40   *
*                                * TAPE TRANSPORT & AUDIO MCH *                *  89/04/19 - 00                         *
ASY  1                          TAPE DECK                                                    <--  <--  <--  CONTINUATION

GRP 22          1.820.802.00
              <--  <--  <--  CONTINUATION
=======================================

ELM 10
    TO GRP24, ELM03                                  P05
---------------------------------------
PNT SIGNAL NAME  COLOR LV TYPE            F
---------------------------------------
 1  B-RCD-01
 2
 3  B-RCD-02
 4  B-RCD-06
 5  B-RCD-03
 6  B-RCD-07
 7
 8
 9  B-RCD-04
10  B-RCD-08
11  B-RCD-05
12  +24.0
13
14  +0.0
15
16
---------------------------------------

ELM 11
    TO GRP24, ELM02                                  P06
---------------------------------------
PNT SIGNAL NAME  COLOR LV TYPE            F
---------------------------------------
 1  B-RCD-09
 2
 3  B-RCD-10
 4  B-RCD-14
 5  B-RCD-11
 6  B-RCD-15
 7
 8
 9  B-RCD-12
10  B-RCD-16
11  B-RCD-13
12  +24.0
13
14  +0.0
15
16
---------------------------------------

GRP 22          1.820.802.00
              <--  <--  <--  CONTINUATION
=======================================

ELM 12
    TO GRP24, ELM01                                  P07
---------------------------------------
PNT SIGNAL NAME  COLOR LV TYPE            F
---------------------------------------
 1  B-RCD-17
 2
 3  B-RCD-18
 4  B-RCD-22
 5  B-RCD-19
 6  B-RCD-23
 7
 8
 9  B-RCD-20
10  B-RCD-24
11  B-RCD-21
12  +24.0
13
14  +0.0
15
16
---------------------------------------
                                                  ./.

GRP 22          1.820.802.00
              <--  <--  <--  CONTINUATION
=======================================

ELM 15
    TAPE DECK BASIS BOARD, ELM32                     P08
---------------------------------------
PNT SIGNAL NAME  COLOR LV TYPE            F
---------------------------------------
 1  + 0.0
 2  TD-HEACT
 3  + 0.0
 4  TD-MVDIR
 5  + 0.0
 6  TD-EVENT
 7  + 0.0
 8  TC-EVENT
 9  + 0.0
10  TD-MOVE
11  + 0.0
12  TA-OUTPO
13  + 0.0
14  ADS-CLK
15  + 0.0
16  TD-C307K
17  + 0.0
18  ADS-CTS
19  + 0.0
20  ADS-DTR
21  + 0.0
22  ADS-RX
23  + 0.0
24  ADS-TX
25  + 0.0
26  TM-EVENT
---------------------------------------
                                                  ./.
```

```
*    WILLI STUDER AG    *    L O C A T I O N     P I N     L I S T            *  89/07/20  *   8:15  *   P A G E  41   *
*                                * TAPE TRANSPORT & AUDIO MCH *                *  89/04/19 - 00                         *
ASY  1                          TAPE DECK                                                    <--  <--  <--  CONTINUATION

GRP 22          1.820.802.00
              <--  <--  <--  CONTINUATION
=======================================

ELM 16
    TAPE DECK BASIS BOARD, ELM33                     P09
---------------------------------------
PNT SIGNAL NAME  COLOR LV TYPE            F
---------------------------------------
 1  + 0.0
 2  TAD-RESA
 3  + 0.0
 4  TAD-RESB
 5  + 0.0
 6  TAD-RESC
 7  + 0.0
 8
 9  + 0.0
10
11  + 0.0
12
13  + 0.0
14
15  + 0.0
16
17  + 0.0
18
19  + 0.0
20
21  + 0.0
22
23  + 0.0
24
25  + 0.0
26
---------------------------------------

ELM 17
                                                 P14
---------------------------------------
PNT SIGNAL NAME  COLOR LV TYPE            F
---------------------------------------
 1  TD-SR/AA
 2  TD-SYNC
 3  CD-SETUP
 4  + 0.0
 5  A-RES
 6  O-RES
 7  KEY
 8  A-PNOISE
 9  O-PNOISE
---------------------------------------

GRP 22          1.820.802.00
              <--  <--  <--  CONTINUATION
=======================================

ELM 18
                                                 P15
---------------------------------------
PNT SIGNAL NAME  COLOR LV TYPE            F
---------------------------------------
 1  TD-SR/AB
 2  TD-SYNC
 3  CD-SETUP
 4  + 0.0
 5  A-RES
 6  O-RES
 7  KEY
 8  A-PNOISE
 9  O-PNOISE
---------------------------------------

ELM 19
                                                 P16
---------------------------------------
PNT SIGNAL NAME  COLOR LV TYPE            F
---------------------------------------
 1  TD-SR/AC
 2  TD-SYNC
 3  CD-SETUP
 4  + 0.0
 5  A-RES
 6  O-RES
 7  KEY
 8  A-PNOISE
 9  O-PNOISE
---------------------------------------
                                                  ./.

GRP 22          1.820.802.00
              <--  <--  <--  CONTINUATION
=======================================

ELM 20          1.820.718.00
    COMMUNICATIONS CONTROLLER                        J05
---------------------------------------
PNT SIGNAL NAME  COLOR LV TYPE            F
---------------------------------------
 1  TD-HEACT
 2  TD-MVDIR
 3  TD-MOVE
 4  TA-OUTPO
 5  A-PNRDT
 6  A-PNTDT
 7  TS-TX
 8  TS-RX
 9  ADS-TX
10  ADS-CLK
11  ADS-DTR
12  ADS-RX
13  ADS-CTS
14  TA-IRQ
15  TA-RX
16  TA-TX
17  TA-C614K
18  +15.0
19  KEY
20  + 5.6
21  + 0.0
22  -15.0
23  PNLBUS1
24  PNLBUS2
25  TA-SL7
26  TA-RESMP
27  TA-RW
28  TA-ENB
29  TA-ADR2
30  TA-ADR1
31  TA-ADR0
32  TA-DATA7
33  TA-DATA6
34  TA-DATA5
35  TA-DATA4
36  TA-DATA3
37  TA-DATA2
38  TA-DATA1
39  TA-DATA0
---------------------------------------
```

```
*****************************************************************************************************************************
*   WILLI STUDER AG   *   L O C A T I O N   P I N   L I S T          * 89/07/20 *  8:15 *  P A G E  42  *
*****************************************************************************************************************************
*                         * TAPE TRANSPORT & AUDIO MCH *                * 89/04/19 - 00                                    *
*****************************************************************************************************************************
ASY  1                    TAPE DECK                                                          <--  <--  <--  CONTINUATION

GRP 22        1.820.802.00
              <--  <--  <--  CONTINUATION
=====================================

ELM 21        1.820.782.00
    MPU AUDIO CONTROL MCH                    J06
-------------------------------------
PNT SIGNAL NAME  COLOR LV TYPE          F
-------------------------------------
 1  TD-EVENT
 2  TC-EVENT
 3  TA-SL3
 4  TA-SL2
 5  TA-RESMP
 6  TA-ADR3
 7
 8  TM-EVENT
 9  TA-NMI
10  TA-RX
11  TA-TX
12  TA-DRENB
13  TA-IRQ
14  T-PWRON
15  TA-SL7
16  TA-C76K
17
18
19  KEY
20  + 5.6
21  + 0.0
22  TA-C614K
23  TA-SL4
24  TA-SL5
25  TA-SL6
26  TA-RESET
27  TA-RW
28  TA-ENB
29  TA-ADR2
30  TA-ADR1
31  TA-ADR0
32  TA-DATA7
33  TA-DATA6
34  TA-DATA5
35  TA-DATA4
36  TA-DATA3
37  TA-DATA2
38  TA-DATA1
39  TA-DATA0
-------------------------------------
                                  ./.

GRP 22        1.820.802.00
              <--  <--  <--  CONTINUATION
=====================================

ELM 22        1.820.725.00
    GENERATOR UNIT MCH                       J07
-------------------------------------
PNT SIGNAL NAME  COLOR LV TYPE          F
-------------------------------------
 1
 2  TONGEN
 3
 4
 5  TD-SYNC
 6  CD-SETUP
 7  + 0.0
 8  A-RES
 9  O-RES
10  A-PNOISE
11  O-PNOISE
12  SGNGND
13  REFLEV
14
15  TD-SR/AA
16  TD-SR/AB
17  TD-SR/AC
18  +15.0
19  KEY
20  + 5.6
21  + 0.0
22  -15.0
23
24
25  TA-SL6
26
27  TA-RW
28  TA-ENB
29  TA-ADR2
30  TA-ADR1
31  TA-ADR0
32  TA-DATA7
33  TA-DATA6
34  TA-DATA5
35  TA-DATA4
36  TA-DATA3
37  TA-DATA2
38  TA-DATA1
39  TA-DATA0
-------------------------------------
                                  ./.

GRP 22        1.820.802.00
              <--  <--  <--  CONTINUATION
=====================================

ELM 23        1.820.816.00
    CONTROLLER EXTERNAL NRS                  J08
-------------------------------------
PNT SIGNAL NAME  COLOR LV TYPE          F
-------------------------------------
 1A
 1B
 2A
 2B
 3A
 3B
 4A + 0.0
 4B + 0.0
 5A
 5B
 6A B-RCD-01
 6B B-RCD-02
 7A B-RCD-06
 7B B-RCD-03
 8A B-RCD-07
 8B B-RCD-04
 9A B-RCD-08
 9B B-RCD-05
10A
10B
11A
11B
12A + 0.0
12B + 0.0
13A
13B
14A B-RCD-09
14B B-RCD-10
15A B-RCD-14
15B B-RCD-11
16A B-RCD-15
16B B-RCD-12
17A B-RCD-16
17B B-RCD-13
18A
18B
19A
19B
20A + 5.6
20B + 5.6
21A B-RCD-17
21B B-RCD-18
22A B-RCD-22
22B B-RCD-19
23A B-RCD-23
23B B-RCD-20
24A B-RCD-24
```

```
*****************************************************************************************************************************
*   WILLI STUDER AG   *   L O C A T I O N   P I N   L I S T          * 89/07/20 *  8:15 *  P A G E  43  *
*****************************************************************************************************************************
*                         * TAPE TRANSPORT & AUDIO MCH *                * 89/04/19 - 00                                    *
*****************************************************************************************************************************
ASY  1                    TAPE DECK                                                          <--  <--  <--  CONTINUATION

GRP 22        1.820.802.00
              <--  <--  <--  CONTINUATION
=====================================

ELM 23        1.820.816.00
              <--  <--  <--  CONTINUATION
-------------------------------------
PNT SIGNAL NAME  COLOR LV TYPE          F
-------------------------------------
24B B-RCD-21
25A TA-RESMP
25B TA-SL2
26A TA-RW
26B TA-ENB
27A TA-ADR3
27B TA-ADR2
28A TA-ADR1
28B TA-ADR0
29A TA-DATA7
29B TA-DATA6
30A TA-DATA5
30B TA-DATA4
31A TA-DATA3
31B TA-DATA2
32A TA-DATA1
32B TA-DATA0
-------------------------------------
                                  ./.

GRP 22        1.820.802.00
              <--  <--  <--  CONTINUATION
=====================================

ELM 24        1.820.723.00
    BUS DRIVER MCH                           J09
-------------------------------------
PNT SIGNAL NAME  COLOR LV TYPE          F
-------------------------------------
 1A T-CLP-AB
 1B T-AOP-AB
 1C T-AON-AB
 2A T-CLN-AB
 2B T-A1P-AB
 2C T-A1N-AB
 3A
 3B T-RWP-AB
 3C T-RWN-AB
 4A
 4B T-SL-AB
 4C + 0.0
 5A
 5B T-DT0-AB
 5C T-DT1-AB
 6A
 6B T-DT2-AB
 6C T-DT3-AB
 7A
 7B T-DT4-AB
 7C T-DT5-AB
 8A
 8B T-DT6-AB
 8C T-DT7-AB
 9A T-CLP-CD
 9B T-AOP-CD
 9C T-AON-CD
10A T-CLN-CD
10B T-A1P-CD
10C T-A1N-CD
11A
11B T-RWP-CD
11C T-RWN-CD
12A
12B T-SL-CD
12C + 0.0
13A
13B T-DT0-CD
13C T-DT1-CD
14A
14B T-DT2-CD
14C T-DT3-CD
15A
15B T-DT4-CD
15C T-DT5-CD
16A
16B T-DT6-CD

GRP 22        1.820.802.00
              <--  <--  <--  CONTINUATION
=====================================

ELM 24        1.820.723.00
              <--  <--  <--  CONTINUATION
-------------------------------------
PNT SIGNAL NAME  COLOR LV TYPE          F
-------------------------------------
16C T-DT7-CD
17A T-CLP-EF
17B T-AOP-EF
17C T-AON-EF
18A T-CLN-EF
18B T-A1P-EF
18C T-A1N-EF
19A
19B T-RWP-EF
19C T-RWN-EF
20A
20B T-SL-EF
20C + 5.6
21A
21B T-DT0-EF
21C T-DT1-EF
22A
22B T-DT2-EF
22C T-DT3-EF
23A
23B T-DT4-EF
23C T-DT5-EF
24A
24B T-DT6-EF
24C T-DT7-EF
25A
25B TA-RESET
25C TA-SL4
26A
26B TA-RW
26C TA-ENB
27A
27B TA-ADR3
27C TA-ADR2
28A
28B TA-ADR1
28C TA-ADR0
29A
29B TA-DATA7
29C TA-DATA6
30A
30B TA-DATA5
30C TA-DATA4
31A
31B TA-DATA3
31C TA-DATA2
32A TD-C307K
```

WILLI STUDER AG * L O C A T I O N P I N L I S T * 89/07/20 * 8:15 * P A G E 44
* TAPE TRANSPORT & AUDIO MCH * * 89/04/19 - 00

ASY 1 TAPE DECK

GRP 22 1.820.802.00 <-- <-- <-- CONTINUATION

PNT	SIGNAL NAME	COLOR	LV	TYPE	F
32B	TA-DATA1				
32C	TA-DATA0				

./.

GRP 22 1.820.802.00 <-- <-- <-- CONTINUATION

ELM 25 1.820.726.CC
FLOPPY DISK CONTROLLER J10

PNT	SIGNAL NAME	COLOR	LV	TYPE	F
1A	+12.0				
1B	+12.0				
2A	+15.0				
2B	+15.0				
3A	+ 5.6				
3B	+ 5.6				
4A	+ 0.0				
4B	+ 0.0				
5A					
5B	READY				
6A					
6B	HEADSELE				
7A					
7B	READDATA				
8A					
8B	WRITEPRO				
9A					
9B	TRACK00				
10A					
10B	WRITEGA				
11A					
11B	WRITEDA				
12A					
12B	STEP				
13A					
13B	DIRSELEC				
14A					
14B	MOTORON				
15A					
15B	DRIVESL2				
16A					
16B	DRIVESL1				
17A					
17B	DRIVESL0				
18A					
18B	INDEX				
19A					
19B	DRIVESL3				
20A	+ 5.6				
20B	+ 5.6				
21A					
21B	INUSE				
22A					
22B	DISKCHAN				
23A					
23B					
24A	TA-SL3				

GRP 22 1.820.802.00 <-- <-- <-- CONTINUATION

ELM 25 1.820.726.00

PNT	SIGNAL NAME	COLOR	LV	TYPE	F
24B					
25A	TA-RESMP				
25B	TA-SL2				
26A	TA-RW				
26B	TA-ENB				
27A	TA-ADR3				
27B	TA-ADR2				
28A	TA-ADR1				
28B	TA-ADR0				
29A	TA-DATA7				
29B	TA-DATA6				
30A	TA-DATA5				
30B	TA-DATA4				
31A	TA-DATA3				
31B	TA-DATA2				
32A	TA-DATA1				
32B	TA-DATA0				

./.

WILLI STUDER AG * L O C A T I O N P I N L I S T * 89/07/20 * 8:15 * P A G E 45
* TAPE TRANSPORT & AUDIO MCH * * 89/04/19 - 00

ASY 1 TAPE DECK

GRP 22 1.820.802.00 <-- <-- <-- CONTINUATION

ELM 26 1.820.000.00
FLOPPY DISK CONNECTOR P13

PNT	SIGNAL NAME	COLOR	LV	TYPE	F
1	+ 0.0				
2	DISKCHAN				
3	+ 0.0				
4	INUSE				
5	+ 0.0				
6	DRIVESL3				
7	+ 0.0				
8	INDEX				
9	+ 0.0				
10	DRIVESL0				
11	+ 0.0				
12	DRIVESL1				
13	+ 0.0				
14	DRIVESL2				
15	+ 0.0				
16	MOTORON				
17	+ 0.0				
18	DIRSELEC				
19	+ 0.0				
20	STEP				
21	+ 0.0				
22	WRITEDA				
23	+ 0.0				
24	WRITEGA				
25	+ 0.0				
26	TRACK00				
27	+ 0.0				
28	WRITEPRO				
29	+ 0.0				
30	READDATA				
31	+ 0.0				
32	HEADSELE				
33	+ 0.0				
34					

./.

GRP 22 1.820.802.00 <-- <-- <-- CONTINUATION

ELM 50
TO AUDIO RACK CH 1 TO 8 P10

PNT	SIGNAL NAME	COLOR	LV	TYPE	F
1	+ 0.0				
2	+ 0.0				
3	+ 5.6				
4	+ 5.6				
5	+15.0				
6	-15.0				
7	TONGEN				
8	SGNGND				
9	REFLEV				
10	+ 0.0				
11	T-CLP-AB				
12	T-CLN-AB				
13	+ 0.0				
14	T-A0P-AB				
15	T-A0N-AB				
16	+ 0.0				
17	T-A1P-AB				
18	T-A1N-AB				
19	+ 0.0				
20	T-RWP-AB				
21	T-RWN-AB				
22	+ 0.0				
23	T-SL-AB				
24	+ 0.0				
25	T-DT0-AB				
26	+ 0.0				
27	T-DT1-AB				
28	+ 0.0				
29	T-DT2-AB				
30	+ 0.0				
31	T-DT3-AB				
32	+ 0.0				
33	T-DT4-AB				
34	+ 0.0				
35	T-DT5-AB				
36	+ 0.0				
37	T-DT6-AB				
38	+ 0.0				
39	T-DT7-AB				
40	+ 0.0				

GRP 22 1.820.802.00 <-- <-- <-- CONTINUATION

ELM 51
TO AUDIO RACK CH 9 TO 16 P11

PNT	SIGNAL NAME	COLOR	LV	TYPE	F
1	+ 0.0				
2	+ 0.0				
3	+ 5.6				
4	+ 5.6				
5	+15.0				
6	-15.0				
7	TONGEN				
8	SGNGND				
9	REFLEV				
10	+ 0.0				
11	T-CLP-CD				
12	T-CLN-CD				
13	+ 0.0				
14	T-A0P-CD				
15	T-A0N-CD				
16	+ 0.0				
17	T-A1P-CD				
18	T-A1N-CD				
19	+ 0.0				
20	T-RWP-CD				
21	T-RWN-CD				
22	+ 0.0				
23	T-SL-CD				
24	+ 0.0				
25	T-DT0-CD				
26	+ 0.0				
27	T-DT1-CD				
28	+ 0.0				
29	T-DT2-CD				
30	+ 0.0				
31	T-DT3-CD				
32	+ 0.0				
33	T-DT4-CD				
34	+ 0.0				
35	T-DT5-CD				
36	+ 0.0				
37	T-DT6-CD				
38	+ 0.0				
39	T-DT7-CD				
40	+ 0.0				

WILLI STUDER AG * L O C A T I O N P I N L I S T * 89/07/20 * 8:15 * P A G E 46
* TAPE TRANSPORT & AUDIO MCH * * 89/04/19 - 00
ASY 1 TAPE DECK <-- <-- <-- CONTINUATION

GRP 22 1.820.802.00
<-- <-- <-- CONTINUATION

ELM 52
TO AUDIO RACK CH 17 TO 24 P12

PNT	SIGNAL NAME	COLOR	LV	TYPE	F
1	+ 0.0				
2	+ 0.0				
3	+ 5.6				
4	+ 5.6				
5	+15.0				
6	-15.0				
7	TONGEN				
8	SGNGND				
9	REFLEV				
10	+ 0.0				
11	T-CLP-EF				
12	T-CLN-EF				
13	+ 0.0				
14	T-A0P-EF				
15	T-A0N-EF				
16	+ 0.0				
17	T-A1P-EF				
18	T-A1N-EF				
19	+ 0.0				
20	T-RWP-EF				
21	T-RWN-EF				
22	+ 0.0				
23	T-SL-EF				
24	+ 0.0				
25	T-DT0-EF				
26	+ 0.0				
27	T-DT1-EF				
28	+ 0.0				
29	T-DT2-EF				
30	+ 0.0				
31	T-DT3-EF				
32	+ 0.0				
33	T-DT4-EF				
34	+ 0.0				
35	T-DT5-EF				
36	+ 0.0				
37	T-DT6-EF				
38	+ 0.0				
39	T-DT7-EF				
40	+ 0.0				

GRP 23 1.820.322.00
SYNC.-CONNECTION PANEL MK1/MK2

ELM 1
BICODE/PILOT J01

PNT	SIGNAL NAME	COLOR	LV	TYPE	F
1	SHIELD	S	L		
2	SBCS	4	L		
3	SBCR	9	L		
4	+ 5.0	2	L		
5	+ 0.0	6	L		

ELM 2
SLAVE TC OUT J02

PNT	SIGNAL NAME	COLOR	LV	TYPE	F
1	SHIELD	S	L		
2	STC1A	6	L		
3	STC1B	9	L		

ELM 3
SLAVE TC IN J03

PNT	SIGNAL NAME	COLOR	LV	TYPE	F
1	SHIELD	S	L		
2	STC1A	6	L		
3	STC1B	9	L		

ELM 4
TC IN/PILOT J04

PNT	SIGNAL NAME	COLOR	LV	TYPE	F
1	SHIELD	S	I		
2	MTC1A	6	L		
3	MTC1B	9	L		

ELM 5
BICODE J05

PNT	SIGNAL NAME	COLOR	LV	TYPE	F
1	SHIELD	S	L		
2	MBCS	4	L		
3	MBCR	9	L		
4	+ 5.0	2	L		
5	+ 0.0	6	L		

GRP 23 1.820.322.00
<-- <-- <-- CONTINUATION

ELM 6
MASTER TC OUT P01

PNT	SIGNAL NAME	COLOR	LV	TYPE	F
1	SHIELD	S	L		
2	MTC1A	6	L		
3	MTC1B	9	L		

ELM 7
MASTER TC IN J06

PNT	SIGNAL NAME	COLOR	LV	TYPE	F
1	SHIELD	S	L		
2	MTC1A	6	L		
3	MTC1B	9	L		

ELM 8
CONN. PARALLEL REMOTE CONTROL J07

PNT	SIGNAL NAME	COLOR	LV	TYPE	F
1	+ 0.0			B	
2	BR-REW			B	
3	BR-FORW			B	
4	BR-VRSPD			B	
5	SR-VRSPD			B	
6	SR-FADRY			B	
7	BR-LOCST			B	
8	BR-FADRY			B	
9	BR-REC			B	
10	SR-RESET			B	
11	FAD1			B	
12	FAD2			B	
13	IR-REFEX			B	
14	SR-OLOC			B	
15	BR-PLAY			B	
16	BR-STOP			B	
17	SR-LIFT			B	
18	SR-LOCST			B	
19	SR-REC			B	
20	SR-REW			B	
21	SR-FORW			B	
22	SR-PLAY			B	
23	SR-STOP			B	
24	KEY			B	
25	+24.OREM			B	

WILLI STUDER AG * L O C A T I O N P I N L I S T * 89/07/20 * 8:15 * P A G E 47
* TAPE TRANSPORT & AUDIO MCH * * 89/04/19 - 00
ASY 1 TAPE DECK <-- <-- <-- CONTINUATION

GRP 23 1.820.322.00
<-- <-- <-- CONTINUATION

ELM 9
LOCAL CONTROL UNIT J08

PNT	SIGNAL NAME	COLOR	LV	TYPE	F
1	+ 5.0	1		B	
2	+ 5.0	3		B	
3	+ 5.0	5		B	
4	+ 0.0	7		B	
5	+ 0.0	9		B	
6	+ 0.0	1		B	
7	LCU-B	3		B	
8	+ 0.0	5		B	
9	+ 5.0	2		B	
10	+ 5.0	4		B	
11	+ 5.0	6		B	
12	S-ENABLE	8		B	
13		0		B	
14	LCU-A	2		B	
15	SHIELD	4		B	

ELM 10
SERIAL REMOTE J09

PNT	SIGNAL NAME	COLOR	LV	TYPE	F
1	FRMGND				
2	TRANSA				
3	RECEIVB				
4	RECEIVCM				
5	SPARE				
6	TRANSCM				
7	TRANSB				
8	RECEIVA				
9	FRMGND				

ELM 11
SERIAL REMOTE J10

PNT	SIGNAL NAME	COLOR	LV	TYPE	F
1	FRMGND				
2	TRANSA				
3	RECEIVB				
4	RECEIVCM				
5	SPARE				
6	TRANSCM				
7	TRANSB				
8	RECEIVA				
9	FRMGND				

GRP 23 1.820.322.00
<-- <-- <-- CONTINUATION

ELM 12
MASTER TALLIES J11

PNT	SIGNAL NAME	COLOR	LV	TYPE	F
1	+ 0.0	1		B	
2	M-STOP	3		B	
3	M-MOVE1	5		B	
4	M-PLAY	7		B	
5	+ 0.0	9		B	
6	M-FREC	2		B	
7	M-TPILOT	4		B	
8	M-REC	6		B	
9	M-MOVE2L	8		B	

ELM 13
COMP. VIDEO IN J12

PNT	SIGNAL NAME	COLOR	LV	TYPE	F
1	+ 0.0	S	L		
2	CVIDEO	9	L		

ELM 14
COMP. VIDEO IN J13

PNT	SIGNAL NAME	COLOR	LV	TYPE	F
1	+ 0.0	S	L		
2	CVIDEO	9	L		

./.

GRP 23 1.820.322.00
<-- <-- <-- CONTINUATION

ELM 15
SLAVE CONTROLL B J14

PNT	SIGNAL NAME	COLOR	LV	TYPE	F
1					
2					
3					
4					
5					
6					
7					
8					
9					
10					
11					
12					
13					
14					
15					
16					
17					
18					
19					
20					
21					
22					
23					
24					
25					

WILLI STUDER AG * L O C A T I O N P I N L I S T * 89/07/20 * 8:15 * P A G E 48
* TAPE TRANSPORT & AUDIO MCH * * 89/04/19 - 00

ASY 1 TAPE DECK <-- <-- <-- CONTINUATION

GRP 24
AUDIO REMOTE CONTROL PANEL

ELM 1
NRS CONTROL CONN. CH 17 TO 24

PNT	SIGNAL NAME	COLOR	LV	TYPE	F
1	B-RCD-17				
2	B-RCD-18				
3	B-RCD-19				
4	KEY				
5	B-RCD-20				
6	B-RCD-21				
7					
8					
9					
10	B-RCD-22				
11	B-RCD-23				
12	KEY				
13	B-RCD-24				
14	+24.0				
15	+ 0.0				

ELM 2
NRS CONTROL CONN. CH 9 TO 16

PNT	SIGNAL NAME	COLOR	LV	TYPE	F
1	B-RCD-09				
2	B-RCD-10				
3	B-RCD-11				
4	KEY				
5	B-RCD-12				
6	B-RCD-13				
7					
8					
9					
10	B-RCD-14				
11	B-RCD-15				
12	KEY				
13	B-RCD-16				
14	+24.0				
15	+ 0.0				

./.

GRP 24
<-- <-- <-- CONTINUATION

ELM 3
NRS CONTROL CONN. CH 1 TO 8

PNT	SIGNAL NAME	COLOR	LV	TYPE	F
1	B-RCD-01				
2	B-RCD-02				
3	B-RCD-03				
4	KEY				
5	B-RCD-04				
6	B-RCD-05				
7					
8					
9					
10	B-RCD-06				
11	B-RCD-07				
12	KEY				
13	B-RCD-08				
14	+24.0				
15	+ 0.0				

ELM 4

PNT	SIGNAL NAME	COLOR	LV	TYPE	F

ELM 5

PNT	SIGNAL NAME	COLOR	LV	TYPE	F

ELM 6

PNT	SIGNAL NAME	COLOR	LV	TYPE	F

./.

GRP 24
<-- <-- <-- CONTINUATION

ELM 7
VU METER PANEL EXTERNAL

PNT	SIGNAL NAME	COLOR	LV	TYPE	F
1	OSTABIN	0		L	
2	OSTABIN	0		L	
3	OSTABIN	0		L	
4	+STABIN4	2		L	
5	+STABIN4	2		L	
6	+STABIN4	2		L	
7	PNLBUS1	4		L	
8	PNLBUS2	5		L	

WILLI STUDER AG * L O C A T I O N P I N L I S T * 89/07/20 * 8:15 * P A G E 49
* TAPE TRANSPORT & AUDIO MCH * * 89/04/19 - 00

ASY 1 TAPE DECK <-- <-- <-- CONTINUATION

GRP 25
REMOTE CONTROL PANEL

ELM 1
CONN. AUTOLOCATOR, REMOTE TIMER J01

PNT	SIGNAL NAME	COLOR	LV	TYPE	F
1	SHIELD			B	
2				B	
3	TR-A			B	
4	KEY			B	
5	+ 0.0			B	
6				B	
7	TR-B			B	
8	SIGN.GND			B	
9	+STABIN4			B	

ELM 2
CONNECTOR SYNCHRONIZER CONTROL J02

PNT	SIGNAL NAME	COLOR	LV	TYPE	F
1	+ 0.0			B	
2	BR-REW			B	
3	BR-FORW			B	
4	BR-VRSPD			B	
5	SR-VRSPD			B	
6	SR-REHSL			B	
7	OR-MVCLK			B	
8	KEY/CDIR			B	
9	BR-REC			B	
10	OR-MVDIR			B	
11	OR-CMCLK			B	
12	OR-SYENB			B	
13	IR-REFEX			B	
14	+ 0.0			B	
15	BR-PLAY			B	
16	BR-STOP			B	
17	SR-LIFT			B	
18	SR-MUTE			B	
19	SR-REC			B	
20	SR-REW			B	
21	SR-FORW			B	
22	SR-PLAY			B	
23	SR-STOP			B	
24	KEY			B	
25	+24.0REM			B	

GRP 25
<-- <-- <-- CONTINUATION

ELM 3
CONN. PARALLEL REMOTE CONTROL J03

PNT	SIGNAL NAME	COLOR	LV	TYPE	F
1	+ 0.0			B	
2	BR-REW			B	
3	BR-FORW			B	
4	BR-VRSPD			B	
5	SR-VRSPD			B	
6	SR-FADRY			B	
7	BR-LOCST			B	
8	BR-FADRY			B	
9	BR-REC			B	
10	SR-RESET			B	
11	FAD1			B	
12	FAD2			B	
13	IR-REFEX			B	
14	SR-OLOC			B	
15	BR-PLAY			B	
16	BR-STOP			B	
17	SR-LIFT			B	
18	SR-LOCST			B	
19	SR-REC			B	
20	SR-REW			B	
21	SR-FORW			B	
22	SR-PLAY			B	
23	SR-STOP			B	
24	KEY			B	
25	+24.0REM			B	

ELM 4
CONNECTOR SMPTE/EBU BUS J04

PNT	SIGNAL NAME	COLOR	LV	TYPE	F
1	FRMGND			B	
2	TRANSA			B	
3	RECEIVB			B	
4	RECEIVCM			B	
5	SPARE			B	
6	TRANSCM			B	
7	TRANSB			B	
8	RECEIVA			B	
9	FRMGND			B	

GRP 25
<-- <-- <-- CONTINUATION

ELM 5
CONNECTOR SMPTE/EBU BUS J05

PNT	SIGNAL NAME	COLOR	LV	TYPE	F
1	FRMGND			B	
2	TRANSA			B	
3	RECEIVB			B	
4	RECEIVCM			B	
5	SPARE			B	
6	TRANSCM			B	
7	TRANSB			B	
8	RECEIVA			B	
9	FRMGND			B	

```
*****************************************************************************************************************************
*    WILLI STUDER AG    *    L O C A T I O N     P I N     L I S T            *  89/07/20  *   8:15  *  P A G E  50   *
*****************************************************************************************************************************
*                              * TAPE TRANSPORT & AUDIO MCH *                  *  89/04/19 - 00                          *
*****************************************************************************************************************************
ASY  1                         TAPE DECK                                                    <--  <--  <--  CONTINUATION

GRP 26         1.820.729.00
    SERIAL REMOTE INTERFACE
=======================================

ELM  1
    FROM PAR. REM. IF                                                  P01
---------------------------------------
PNT SIGNAL NAME  COLOR LV TYPE           F
---------------------------------------
 1  + 0.0
 2  + 5.0
 3  +STABIN4
 4  T-RL0
 5  T-RL1
 6  T-SL3
 7  T-A3
 8  T-B0
 9  T-A1
10  T-A2
11  T-B3
12  T-A0
13  T-B1
14  T-B2
15  T-B0
16  T-SL0
17  T-SL1
18  T-RL7
19  T-RL6
20  T-OE
21  T-SL2
22  T-RL5
23  T-RL4
24  T-RESET
25  T-RL3
26  T-RL2
---------------------------------------

ELM  2
    TO GRP25, ELM01 (REMOTE PANEL)                                     P02
---------------------------------------
PNT SIGNAL NAME  COLOR LV TYPE           F
---------------------------------------
 1  SHIELD
 2
 3
 4  TR-B
 5  TR-A
 6  SIGN.GND
 7  KEY
 8  +STABIN4
 9  + 0.0
10
---------------------------------------

GRP 26         1.820.729.00
                          <--  <--  <--  CONTINUATION
=======================================

ELM  3
    TO PAR. REM. IF                                                    J01
---------------------------------------
PNT SIGNAL NAME  COLOR LV TYPE           F
---------------------------------------
 1  + 0.0          0
 2  SR-REC         3
 3  SR-PLAY        4
 4
---------------------------------------

GRP 27         1.820.738.00
    PARALLEL REMOTE INTERFACE
=======================================

ELM  1
    TO GRP26, ELM01 (SERIAL REM. IF)                                   P01
---------------------------------------
PNT SIGNAL NAME  COLOR LV TYPE           F
---------------------------------------
 1  + 0.0
 2  + 5.0
 3  +STABIN4
 4  T-RL0
 5  T-RL1
 6  T-SL3
 7  T-A3
 8  T-B0
 9  T-A1
10  T-A2
11  T-B3
12  T-A0
13  T-B1
14  T-B2
15  T-B0
16  T-SL0
17  T-SL1
18  T-RL7
19  T-RL6
20  T-OE
21  T-SL2
22  T-RL5
23  T-RL4
24  T-RESET
25  T-RL3
26  T-RL2
---------------------------------------
                                                                      ./.

*****************************************************************************************************************************
*    WILLI STUDER AG    *    L O C A T I O N     P I N     L I S T            *  89/07/20  *   8:15  *  P A G E  51   *
*****************************************************************************************************************************
*                              * TAPE TRANSPORT & AUDIO MCH *                  *  89/04/19 - 00                          *
*****************************************************************************************************************************
ASY  1                         TAPE DECK                                                    <--  <--  <--  CONTINUATION

GRP 27         1.820.738.00
                    <--  <--  <--  CONTINUATION
=======================================

ELM  2
    FROM GRP20, ELM16 (BASIS BOARD)                                    P02
---------------------------------------
PNT SIGNAL NAME  COLOR LV TYPE           F
---------------------------------------
 1  + 0.0
 2  + 0.0
 3  + 5.6
 4  + 5.6
 5  +STABIN4
 6  +STABIN4
 7  TM-DSL5
 8  TM-ISL5
 9  TM-DRES
10  TM-IRES
11  TM-DRW
12  TM-IRW
13  TM-DENB
14  TM-IENB
15  T-REFEXT
16  0.0 VCU
17  TC-TCMV
18  TC-TCDIR
19  TM-DADRO
20  TM-IADRO
21  TM-REMIR
22  0.0 VCU
23  TD-MVCLK
24  TD-MVDIR
25  TM-DATA7
26  0.0 VCU
27  TM-DATA6
28  0.0 VCU
29  TM-DATA5
30  0.0 VCU
31  TM-DATA4
32  0.0 VCU
33  TM-DATA3
34  0.0 VCU
35  TM-DATA2
36  0.0 VCU
37  TM-DATA1
38  0.0 VCU
39  TM-DATA0
40  0.0 VCU
---------------------------------------
                                                                      ./.

GRP 27         1.820.738.00
                    <--  <--  <--  CONTINUATION
=======================================

ELM  3
    TO GRP25, ELM02 (SYNCHRONIZER)                                     P03
---------------------------------------
PNT SIGNAL NAME  COLOR LV TYPE           F
---------------------------------------
 1  + 0.0
 2  + 0.0
 3  BR-REW
 4  BR-PLAY
 5  BR-FORW
 6  BR-STOP
 7  BR-VRSPD
 8  SR-LIFT
 9  SR-VRSPD
10  SR-MUTE
11  SR-REHSL
12  SR-REC
13  OR-MVCLK
14  SR-REW
15  KEY/CDIR
16  SR-FORW
17  BR-REC
18  SR-PLAY
19  OR-MVDIR
20  SR-STOP
21  OR-CMCLK
22  KEY
23  OR-SYENB
24  +24.0REM
25  IR-REFEX
26
---------------------------------------
                                                                      ./.

GRP 27         1.820.738.00
                    <--  <--  <--  CONTINUATION
=======================================

ELM  4
    TO CONN. PARALLEL REMOTE CONTR.                                    P04
---------------------------------------
PNT SIGNAL NAME  COLOR LV TYPE           F
---------------------------------------
 1  + 0.0
 2  SR-OLOC
 3  BR-REW
 4  BR-PLAY
 5  BR-FORW
 6  BR-STOP
 7  BR-VRSPD
 8  SR-LIFT
 9  SR-VRSPD
10  SR-LOCST
11  SR-FADRY
12  SR-REC
13  BR-LOCST
14  SR-REW
15  BR-FADRY
16  SR-FORW
17  BR-REC
18  SR-PLAY
19  SR-RESET
20  SR-STOP
21  FAD1
22  KEY
23  FAD2
24  +24.0REM
25  IR-REFEX
26
---------------------------------------

ELM  5
                                                                       P05
---------------------------------------
PNT SIGNAL NAME  COLOR LV TYPE           F
---------------------------------------
 1  GND                    Y
---------------------------------------

ELM  6          54.99.0213
                                                                       P05
---------------------------------------
PNT SIGNAL NAME  COLOR LV TYPE           F
---------------------------------------
 1  + 0.0
 2  SR-REC
 3  SR-PLAY
 4
---------------------------------------
```

WILLI STUDER AG * L O C A T I O N P I N L I S T * 89/07/20 * 8:15 * P A G E 52
* TAPE TRANSPORT & AUDIO MCH * * 89/04/19 - 00
ASY 1 TAPE DECK <-- <-- <-- CONTINUATION

GRP 28 1.820.861.00
TIMER CONTROL BOARD

ELM 1
FROM B. BOARD TAPE DECK, ELM 19 P01

PNT	SIGNAL NAME	COLOR LV TYPE	F
1	+ 0.0		
2	+ 0.0		
3	+ 5.6		
4	+ 5.6		
5	+15.0		
6	-15.0		
7	T-SADA		
8	T-SADB		
9	T-SADC		
10	T-READSL		
11	T-WRTSL		
12	T-DT-CH1		
13	T-DT-CH2		
14	T-DT-CH3		
15	T-DT-MP		
16	+ 0.0		

ELM 2
TO VU-METER PANEL P02

PNT	SIGNAL NAME	COLOR LV TYPE	F
1	+ 0.0		
2	+ 0.0		
3	+ 5.6		
4	+ 5.6		
5	+15.0		
6	-15.0		
7	T-SADA		
8	T-SADB		
9	T-SADC		
10	T-READSL		
11	T-WRTSL		
12	T-DT-CH1		
13	T-DT-CH2		
14	T-DT-CH3		
15	T-DT-MP		
16	+ 0.0		

GRP 28 1.820.861.00
<-- <-- <-- CONTINUATION

ELM 3
TO MECHANICAL TIMER P03

PNT	SIGNAL NAME	COLOR LV TYPE	F
1	+15.0T	2	
2	+ 0.0T	6	

GRP 29 1.820.869.00
POWER FAIL SENSE BOARD

ELM 1
FROM SP. M. DRIVE AMPL. RIGHT J01

PNT	SIGNAL NAME	COLOR LV TYPE	F
1	-VMOT	BX	
2	+VMOT	BX	

ELM 2
TO SPOOLING MOTOR RIGHT J02

PNT	SIGNAL NAME	COLOR LV TYPE	F
1	-VMOT	BX	
2	+VMOT	BX	

ELM 3
FROM SP. M. DRIVE AMPL. LEFT J03

PNT	SIGNAL NAME	COLOR LV TYPE	F
1	-VMOT	BX	
2	+VMOT	BX	

ELM 4
TO SPOOLING MOTOR LEFT J04

PNT	SIGNAL NAME	COLOR LV TYPE	F
1	-VMOT	BX	
2	+VMOT	BX	

./.

WILLI STUDER AG * L O C A T I O N P I N L I S T * 89/07/20 * 8:15 * P A G E 53
* TAPE TRANSPORT & AUDIO MCH * * 89/04/19 - 00
ASY 1 TAPE DECK <-- <-- <-- CONTINUATION

GRP 29 1.820.869.00
<-- <-- <-- CONTINUATION

ELM 5
FROM GRP20, ELM02 (BASIS B. TD) P01

PNT	SIGNAL NAME	COLOR LV TYPE	F
1	+ 0.0		
2	+ 0.0		
3	+ 5.6		
4	+ 5.6		
5	+15.0		
6	-15.0		
7	PWMPR-L1		
8	PWMPR-L2		
9	PWMPR-H1		
10	PWMPR-H2		
11	PWMPR-L3		
12	PWMPR-L4		
13	AN-ICRD		
14	PWMPR-L5		
15	PWMPR-L6		
16	+ 0.0		

ELM 6
TO SPOOLING M. DRIVE AMP. RIGHT P02

PNT	SIGNAL NAME	COLOR LV TYPE	F
1	+ 0.0		
2	+ 0.0		
3	+ 5.6		
4	+ 5.6		
5	+15.0		
6	-15.0		
7	PWMPR-L1		
8	PWMPR-L2		
9	PWMPR-H1		
10	PWMPR-H2		
11	PWMPR-L3		
12	PWMPR-L4		
13	AN-ICRD		
14	PWMPR-L5		
15	PWMPR-L6		
16	+ 0.0		

GRP 30 1.820.875.00
SPOOLING MOTOR DRIVE AMPLIFIER RIGHT

ELM 1
SUPPLY INPUT J03

PNT	SIGNAL NAME	COLOR LV TYPE	F
1	+ 0.0	BX	
2	OSTABIN	BX	
3		BX	
4	+STABIN1	BX	

ELM 2
FROM GRP29, ELM06 P01

PNT	SIGNAL NAME	COLOR LV TYPE	F
1	+ 0.0		
2	+ 0.0		
3	+ 5.6		
4	+ 5.6		
5	+15.0		
6	-15.0		
7	PWMPR-L1		
8	PWMPR-L2		
9	PWMPR-H1		
10	PWMPR-H2		
11	PWMPR-L3		
12	PWMPR-L4		
13	AN-ICRD		
14	PWMPR-L5		
15	PWMPR-L6		
16	+ 0.0		

ELM 3
OUTPUT (MOTOR RIGHT) J01

PNT	SIGNAL NAME	COLOR LV TYPE	F
1	-VMOT	BX	
2	+VMOT	BX	

ELM 4
OUTPUT (MOTOR LEFT) J02

PNT	SIGNAL NAME	COLOR LV TYPE	F
1	+VMOT	BX	
2	-VMOT	BX	

GRP 31 1.820.871.00
SWITCHING STABILIZER +15.0 / -15.0

ELM 1
FROM DISTRIBUTION BOARD (ELM20) P01

PNT	SIGNAL NAME	COLOR LV TYPE	F
1	+ 0.0		
2	+ 0.0		
3	+ 5.6		
4	+ 5.6		
5	+15.0		
6	-15.0		
7	TD-C76K		
8	TD-PWEN1		
9			
10			

ELM 2
DC OUTPUT (GRP35, ELM53) P02

PNT	SIGNAL NAME	COLOR LV TYPE	F
1	-15.0	BX	
2	-15.0	BX	
3	+ 0.0	BX	
4	+ 0.0	BX	
5	+15.0	BX	
6	+15.0	BX	
7	+ 0.0	BX	
8	+24.0NRS	BX	

ELM 3
DC INPUT (GRP35, ELM54) P03

PNT	SIGNAL NAME	COLOR LV TYPE	F
1	OSTABIN	BX	
2	OSTABIN	BX	
3	+STABIN2	BX	
4	+STABIN2	BX	

WILLI STUDER AG * L O C A T I O N P I N L I S T * 89/07/20 * 8:15 * P A G E 54
* TAPE TRANSPORT & AUDIO MCH * * 89/04/19 - 00
ASY 1 TAPE DECK <-- <-- <-- CONTINUATION

GRP 32 1.820.872.00
SWITCHING STABILIZER + 5.6

ELM 1
FROM DISTRIBUTION BOARD (ELM21) P01

PNT	SIGNAL NAME	COLOR LV	TYPE	F
1	+ 0.0			
2	+ 0.0			
3	+ 5.6			
4	+ 5.6			
5	+15.0			
6	-15.0			
7	TD-C76K			
8	TD-PWEN2			
9	+0.0SENS			
10	+5.6SENS			

ELM 2
DC OUTPUT (GRP35, ELM55) P02

PNT	SIGNAL NAME	COLOR LV	TYPE	F
1	+ 0.0		BX	
2	+24.0		BX	
3	-26.0		BX	
4	+ 0.0		BX	
5	+26.0		BX	
6			BX	
7	+ 0.0		BX	
8	+ 0.0		BX	
9	+ 5.6		BX	
10	+ 5.6		BX	

ELM 3
DC INPUT (GRP35, ELM56) P03

PNT	SIGNAL NAME	COLOR LV	TYPE	F
1	OSTABIN		BX	
2	+STABIN3		BX	

GRP 33 1.820.875.00
SPOOLING MOTOR DRIVE AMPLIFIER LEFT

ELM 1
SUPPLY INPUT J03

PNT	SIGNAL NAME	COLOR LV	TYPE	F
1	+ 0.0		BX	
2	OSTABIN		BX	
3			BX	
4	+STABIN1		BX	

ELM 2
FROM GRP20, ELM01 (BASIS B. TD) P01

PNT	SIGNAL NAME	COLOR LV	TYPE	F
1	+ 0.0			
2	+ 0.0			
3	+ 5.6			
4	+ 5.6			
5	+15.0			
6	-15.0			
7	PWMPL-L1			
8	PWMPL-L2			
9	PWMPL-H1			
10	PWMPL-H2			
11	PWMPL-L3			
12	PWMPL-L4			
13	AN-ICLD			
14	PWMPL-L5			
15	PWMPL-L6			
16	+ 0.0			

ELM 3
OUTPUT (MOTOR RIGHT) J01

PNT	SIGNAL NAME	COLOR LV	TYPE	F
1	-VMOT		BX	
2	+VMOT		BX	

ELM 4
OUTPUT (MOTOR LEFT) J02

PNT	SIGNAL NAME	COLOR LV	TYPE	F
1	+VMOT		BX	
2	-VMOT		BX	

GRP 34
GROUND CONNECTION

ELM 1
GROUND CONNECTION P01

PNT	SIGNAL NAME	COLOR LV	TYPE	F
1	GND	0	J	

WILLI STUDER AG * L O C A T I O N P I N L I S T * 89/07/20 * 8:15 * P A G E 55
* TAPE TRANSPORT & AUDIO MCH * * 89/04/19 - 00
ASY 1 TAPE DECK <-- <-- <-- CONTINUATION

GRP 35 1.820.865.00
DISTRIBUTION BOARD TAPE DECK

ELM 1
WIRE FIELD

PNT	SIGNAL NAME	COLOR LV	TYPE	F
1	OSTABIN	0	U	
2	OSTABIN	0	U	
3	+ 0.0	0	U	
4	+ 0.0	0	U	
5	+ 0.0	0	U	
6	OSTABIN	0	U	
7	GND	0	L	
8	OSTABIN	0	U	
9	OSTABIN	0	U	
10	+ 0.0	0	U	
11	+ 0.0	0	U	
12	+ 0.0	0	U	
13	OSTABIN	0	U	
14	+ 0.0			
15	OSTABIN	0	U	
16	OSTABIN	0	U	
17	+ 0.0	0	U	
18	+ 0.0	0	U	
19	OSTABIN	0	U	
20	OSTABIN	0	U	
21	+ 0.0			
22	+ 0.0			
23	+ 0.0			
24	+ 0.0			
25	+ 0.0			
26	OSTABIN	0	L	
27	OSTABIN	0	L	
28	OSTABIN	0	L	
29	OSTABIN	0	L	
30	+ 0.0			
31	OSTABIN	0	L	
32	+ 0.0	0	L	
33	OSTABIN	0	L	
34	OSTABIN	0	L	
35	OSTABIN	0	L	
36	+ 0.0	0	L	
37	+ 0.0	0	L	
38	OSTABIN	0	L	
39	+ 0.0	0	L	
40	+ 0.0	0	L	
41	+ 0.0	0	L	
42	+ 0.0	0	L	
43	+ 0.0	0	L	
44	+ 0.0	0	L	
45	+ 0.0	0	L	
46	+ 0.0	0	L	
47	+ 0.0			

GRP 35 1.820.865.00
<-- <-- <-- CONTINUATION

ELM 1
<-- <-- <-- CONTINUATION

PNT	SIGNAL NAME	COLOR LV	TYPE	F
48	+ 0.0			
49	+ 0.0			
50	+ 0.0			
51	+ 0.0			
52	+ 0.0			
53	+ 0.0			
54	GND	0	L	
55	GND	0	L	

ELM 2
WIRE FIELD

PNT	SIGNAL NAME	COLOR LV	TYPE	F
1	T-PWRON	5	U	
2	T-PWRON	5	U	
3	T-PWRON	5	U	
4	T-PWRON			
5	T-PWRON			
6	T-PWRON			

ELM 3
WIRE FIELD

PNT	SIGNAL NAME	COLOR LV	TYPE	F
1	+STABIN4	2	U	
2	+STABIN4	2	U	
3	+STABIN4	2	U	
4	+STABIN4	2	U	
5	+STABIN4	2	U	
6	+STABIN4	2	U	
7	+STABIN4	2	U	
8	+STABIN4	2	U	
9	+STABIN4			
10	+STABIN4	2	U	
11	+STABIN4			
12	+STABIN4	2	U	
13	+STABIN4	2	L	
14	+STABIN4			

./.

GRP 35 1.820.865.00
<-- <-- <-- CONTINUATION

ELM 4
WIRE FIELD

PNT	SIGNAL NAME	COLOR LV	TYPE	F
1	+24.0	7	U	
2	+24.0	7	L	
3	+24.0			
4	+24.0	7	L	

ELM 5
WIRE FIELD

PNT	SIGNAL NAME	COLOR LV	TYPE	F
1	+26.0	1	U	
2	+26.0	1	L	
3	+26.0			
4	+26.0			

ELM 6
WIRE FIELD

PNT	SIGNAL NAME	COLOR LV	TYPE	F
1	-26.0	8	U	
2	-26.0	8	L	
3	-26.0			
4	-26.0			

ELM 7
WIRE FIELD

PNT	SIGNAL NAME	COLOR LV	TYPE	F
1	+STABIN3	2	U	
2	+STABIN3	2	L	
3	+STABIN3	2	L	
4	+STABIN3			
5	+STABIN3			
6	+STABIN3			
7	+STABIN3			
8	+STABIN3			

./.

```
*****************************************************************************************************************************
*    WILLI STUDER AG   *    L O C A T I O N     P I N     L I S T            * 89/07/20 *   8:15  *   P A G E  56    *
*****************************************************************************************************************************
*                              * TAPE TRANSPORT & AUDIO MCH *                 * 89/04/19 - 00                              *
*****************************************************************************************************************************
ASY  1                          TAPE DECK                                                    <--  <--  <--  CONTINUATION

GRP 35          1.820.865.00
                <--  <--  <--  CONTINUATION
=======================================

ELM  8
     WIRE FIELD
---------------------------------------
PNT SIGNAL NAME  COLOR LV TYPE          F
---------------------------------------
 1  PNLBUS1       4        U
 2  PNLBUS1       4        U
 3  PNLBUS1       4        U
 4  PNLBUS1       4        U
 5  PNLBUS1
 6  PNLBUS1
---------------------------------------

ELM  9
     WIRE FIELD
---------------------------------------
PNT SIGNAL NAME  COLOR LV TYPE          F
---------------------------------------
 1  PNLBUS2       5        U
 2  PNLBUS2       5        U
 3  PNLBUS2       5        U
 4  PNLBUS2       5        U
 5  PNLBUS2
 6  PNLBUS2
---------------------------------------

ELM 10
     WIRE FIELD
---------------------------------------
PNT SIGNAL NAME  COLOR LV TYPE          F
---------------------------------------
 1  +STABIN2      2        U
 2  +STABIN2      2        L
 3  +STABIN2      2        L
 4  +STABIN2      2        L
---------------------------------------

ELM 11
     WIRE FIELD
---------------------------------------
PNT SIGNAL NAME  COLOR LV TYPE          F
---------------------------------------
 1  +STABIN1      2        U
 2  +STABIN1      2        L
 3  +STABIN1      2        L
 4  +STABIN1
---------------------------------------
                                      ./.

GRP 35          1.820.865.00
                <--  <--  <--  CONTINUATION
=======================================

ELM 12
     WIRE FIELD
---------------------------------------
PNT SIGNAL NAME  COLOR LV TYPE          F
---------------------------------------
 1  TD-PWENi
 2  TD-PWEN1
---------------------------------------

ELM 13
     WIRE FIELD
---------------------------------------
PNT SIGNAL NAME  COLOR LV TYPE          F
---------------------------------------
 1  TD-PWEN2
 2  TD-PWEN2
---------------------------------------

ELM 14
     WIRE FIELD
---------------------------------------
PNT SIGNAL NAME  COLOR LV TYPE          F
---------------------------------------
 1  TD-C76K       9        U
 2  TD-C76K
 3  TD-C76K
 4  TD-C76K
 5  TD-C76K
 6  TD-C76K
---------------------------------------

ELM 15
     WIRE FIELD
---------------------------------------
PNT SIGNAL NAME  COLOR LV TYPE          F
---------------------------------------
 1  +24.ONRS      7        L
 2  +24.ONRS
 3  +24.ONRS
 4  +24.ONRS
 5  +24.ONRS
 6  +24.ONRS
---------------------------------------
                                      ./.

GRP 35          1.820.865.00
                <--  <--  <--  CONTINUATION
=======================================

ELM 16
     WIRE FIELD
---------------------------------------
PNT SIGNAL NAME  COLOR LV TYPE          F
---------------------------------------
 1  -15.0         6        U
 2  -15.0         6        L
 3  -15.0         6        L
 4  -15.0         6        L
 5  -15.0
 6  -15.0
 7  -15.0
 8  -15.0
 9  -15.0
---------------------------------------

ELM 17
     WIRE FIELD
---------------------------------------
PNT SIGNAL NAME  COLOR LV TYPE          F
---------------------------------------
 1  +15.0         2        U
 2  +15.0         2        L
 3  +15.0         2        L
 4  +15.0         2        L
 5  +15.0
 6  +15.0
 7  +15.0
 8  +15.0
 9  +15.0
---------------------------------------

ELM 18
     WIRE FIELD
---------------------------------------
PNT SIGNAL NAME  COLOR LV TYPE          F
---------------------------------------
 1  + 5.6         3        U
 2  + 5.6         3        U
 3  + 5.6         3        L
 4  + 5.6         3        L
 5  + 5.6         3        L
 6  + 5.6
 7  + 5.6
 8  + 5.6
 9  + 5.6
10  + 5.6
11  + 5.6
12  + 5.6
---------------------------------------
```

```
*****************************************************************************************************************************
*    WILLI STUDER AG   *    L O C A T I O N     P I N     L I S T            * 89/07/20 *   8:15  *   P A G E  57    *
*****************************************************************************************************************************
*                              * TAPE TRANSPORT & AUDIO MCH *                 * 89/04/19 - 00                              *
*****************************************************************************************************************************
ASY  1                          TAPE DECK                                                    <--  <--  <--  CONTINUATION

GRP 35          1.820.865.00
                <--  <--  <--  CONTINUATION
=======================================

ELM 20
     TO GRP31, ELM01                    P01
---------------------------------------
PNT SIGNAL NAME  COLOR LV TYPE          F
---------------------------------------
 1  + 0.0
 2  + 0.0
 3  + 5.6
 4  + 5.6
 5  +15.0
 6  -15.0
 7  TD-C76K
 8  TD-PWEN1
 9
10
---------------------------------------

ELM 21
     TO GRP32, ELM01                    P02
---------------------------------------
PNT SIGNAL NAME  COLOR LV TYPE          F
---------------------------------------
 1  + 0.0
 2  + 0.0
 3  + 5.6
 4  + 5.6
 5  +15.0
 6  -15.0
 7  TD-C76K
 8  TD-PWEN2
 9
10
---------------------------------------

ELM 22
     AUDIO RACK CH  1 TO  8             J01
---------------------------------------
PNT SIGNAL NAME  COLOR LV TYPE          F
---------------------------------------
 1  + 5.6                 BX
 2                        BX
 3  + 0.0                 BX
 4  + 0.0                 BX
 5  +15.0                 BX
 6                        BX
 7  -15.0                 BX
 8                        BX
 9  RESERVE               BX
10  +24.ONRS              BX
---------------------------------------

GRP 35          1.820.865.00
                <--  <--  <--  CONTINUATION
=======================================

ELM 23
     AUDIO RACK CH  9 TO 16             J02
---------------------------------------
PNT SIGNAL NAME  COLOR LV TYPE          F
---------------------------------------
 1  + 5.6                 BX
 2                        BX
 3  + 0.0                 BX
 4  + 0.0                 BX
 5  +15.0                 BX
 6                        BX
 7  -15.0                 BX
 8                        BX
 9  RESERVE               BX
10  +24.ONRS              BX
---------------------------------------

ELM 24
     AUDIO RACK CH 17 TO 24             J03
---------------------------------------
PNT SIGNAL NAME  COLOR LV TYPE          F
---------------------------------------
 1  + 5.6                 BX
 2                        BX
 3  + 0.0                 BX
 4  + 0.0                 BX
 5  +15.0                 BX
 6                        BX
 7  -15.0                 BX
 8                        BX
 9  RESERVE               BX
10  +24.ONRS              BX
---------------------------------------

ELM 25
     WIRE FIELD
---------------------------------------
PNT SIGNAL NAME  COLOR LV TYPE          F
---------------------------------------
 1  RESERVE1      3        U
 2  RESERVE1
 3  RESERVE1
 4  RESERVE1
---------------------------------------
                                      ./.

GRP 35          1.820.865.00
                <--  <--  <--  CONTINUATION
=======================================

ELM 26
     WIRE FIELD
---------------------------------------
PNT SIGNAL NAME  COLOR LV TYPE          F
---------------------------------------
 1  RESERVE2      0        U
 2  RESERVE2
 3  RESERVE2
 4  RESERVE2
---------------------------------------

ELM 27
     WIRE FIELD
---------------------------------------
PNT SIGNAL NAME  COLOR LV TYPE          F
---------------------------------------
 1  RESERVE3
 2  RESERVE3
 3  RESERVE3
 4  RESERVE3
---------------------------------------

ELM 50
     CONNECTOR TO VU METER PANEL        J04
---------------------------------------
PNT SIGNAL NAME  COLOR LV TYPE          F
---------------------------------------
 1  OSTABIN       0        L
 2  OSTABIN       0        L
 3  OSTABIN       0        L
 4  +STABIN4      2        L
 5  +STABIN4      2        L
 6  +STABIN4      2        L
 7  PNLBUS1       4        L
 8  PNLBUS2       5        L
---------------------------------------

ELM 51
     CONN. TO VU METER PANEL EXTERNAL J05
---------------------------------------
PNT SIGNAL NAME  COLOR LV TYPE          F
---------------------------------------
 1  OSTABIN       0        L
 2  OSTABIN       0        L
 3  OSTABIN       0        L
 4  +STABIN4      2        L
 5  +STABIN4      2        L
 6  +STABIN4      2        L
 7  PNLBUS1       4        L
 8  PNLBUS2       5        L
---------------------------------------
```

```
*****************************************************************************************************************************
*    WILLI STUDER AG    *    L O C A T I O N    P I N    L I S T          *  89/07/20  *   8:15  *   P A G E  58    *
*****************************************************************************************************************************
*                              * TAPE TRANSPORT & AUDIO MCH *                *  89/04/19 - 00                            *
*****************************************************************************************************************************
ASY  1                         TAPE DECK                                                    <--  <--  <--  CONTINUATION

GRP 35          1.820.865.00
                <--  <--  <--  CONTINUATION
=========================================

ELM 52
    FROM GRP30, ELM01                                                              P03
-----------------------------------------
PNT SIGNAL NAME  COLOR LV TYPE                                                      F
-----------------------------------------
 1  + 0.0        0        AX
 2  OSTABIN      0        AX
 3
 4  +STABIN1     2        AX
-----------------------------------------

ELM 53
    FROM GRP31, ELM02                                                              P04
-----------------------------------------
PNT SIGNAL NAME  COLOR LV TYPE                                                      F
-----------------------------------------
 1  -15.0        6        AX
 2  -15.0        6        AX
 3  + 0.0        0        AX
 4  + 0.0        0        AX
 5  +15.0        2        AX
 6  +15.0        2        AX
 7  + 0.0        0        AX
 8  +24.0NRS     7        AX
-----------------------------------------

ELM 54
    TO GRP31, ELM03                                                                P05
-----------------------------------------
PNT SIGNAL NAME  COLOR LV TYPE                                                      F
-----------------------------------------
 1  OSTABIN      0        AX
 2  OSTABIN      0        AX
 3  +STABIN2     2        AX
 4  +STABIN2     2        AX
-----------------------------------------

ELM 55
    FROM GRP32, ELM02                                                              P06
-----------------------------------------
PNT SIGNAL NAME  COLOR LV TYPE                                                      F
-----------------------------------------
 1  + 0.0        0        AX
 2  +24.0        7        AX
 3  -26.0        8        AX
 4  + 0.0        0        AX
 5  +26.0        1        AX
 6
 7  + 0.0        0        AX
 8  + 0.0        0        AX
 9  + 5.6        3        AX
10  + 5.6        3        AX
-----------------------------------------

GRP 35          1.820.865.00
                <--  <--  <--  CONTINUATION
=========================================

ELM 56
    TO GRP32, ELM03                                                                P07
-----------------------------------------
PNT SIGNAL NAME  COLOR LV TYPE                                                      F
-----------------------------------------
 1  OSTABIN      0        AX
 2  +STABIN3     2        AX
-----------------------------------------

ELM 57
    TO GRP33, ELM01                                                                P08
-----------------------------------------
PNT SIGNAL NAME  COLOR LV TYPE                                                      F
-----------------------------------------
 1  + 0.0        0        AX
 2  OSTABIN      0        AX
 3
 4  +STABIN1     2        AX
-----------------------------------------

ELM 58
    FROM ASY07, GRP11, ELM01                                                       P09
-----------------------------------------
PNT SIGNAL NAME  COLOR LV TYPE                                                      F
-----------------------------------------
 1  +STABIN1     2        AX
 2  OSTABIN      0        AX
 3  +STABIN2     2        AX
 4  OSTABIN      0        AX
 5  +STABIN3     2        AX
 6  OSTABIN      0        AX
 7  +STABIN4     2        AX
 8  OSTABIN      0        AX
 9  T-PWRON      5        AX
10
-----------------------------------------
                                                                                    ./.

GRP 35          1.820.865.00
                <--  <--  <--  CONTINUATION
=========================================

ELM 59
    TO GRP20, ELM70                                                                P10
-----------------------------------------
PNT SIGNAL NAME  COLOR LV TYPE                                                      F
-----------------------------------------
 1  + 5.6        3        M
 2  + 5.6        3        M
 3  RESERVE1     3        M
 4  TD-C76K      9        M
 5  + 0.0        0        M
 6  + 0.0        0        M
 7  T-PWRON      5        M
 8  + 0.0        0        M
 9  + 0.0        0        M
10  + 0.0        0        M
11  +15.0        2        M
12  -15.0        6        M
13  + 0.0        0        M
14  + 0.0        0        M
15  +24.0        7        M
16  +STABIN4     2        M
17  +STABIN1     2        M
18  +STABIN2     2        M
19  -26.0        8        M
20  +26.0        1        M
21  + 0.0        0        M
22  RESERVE2     0        M
23  OSTABIN      0        M
24  +STABIN3     2        M
-----------------------------------------

ELM 60
    FROM GRP21, ELM01                                                              P11
-----------------------------------------
PNT SIGNAL NAME  COLOR LV TYPE                                                      F
-----------------------------------------
 1  PNLBUS1      4        N
 2
 3  PNLBUS2      5        N
-----------------------------------------
                                                                                    ./.
```

```
*****************************************************************************************************************************
*    WILLI STUDER AG    *    L O C A T I O N    P I N    L I S T          *  89/07/20  *   8:15  *   P A G E  59    *
*****************************************************************************************************************************
*                              * TAPE TRANSPORT & AUDIO MCH *                *  89/04/19 - 00                            *
*****************************************************************************************************************************
ASY  1                         TAPE DECK                                                    <--  <--  <--  CONTINUATION

GRP 35          1.820.865.00
                <--  <--  <--  CONTINUATION
=========================================

ELM 61
    TO GRP21, ELM08                                                                P12
-----------------------------------------
PNT SIGNAL NAME  COLOR LV TYPE                                                      F
-----------------------------------------
 1  + 5.6        3        AX
 2
 3  + 0.0        0        AX
 4  + 0.0        0        AX
 5  +15.0        2        AX
 6
 7  -15.0        6        AX
 8
 9  T-PWRON      5        AX
10  +24.0NRS     7        AX
-----------------------------------------

ELM 62
    TO GRP34, ELM01                                                                J06
-----------------------------------------
PNT SIGNAL NAME  COLOR LV TYPE                                                      F
-----------------------------------------
 1  GND          0        J
-----------------------------------------

GRP 36          1.820.192.00
    SPOOLING MOTOR ASSEMBLY, LEFT
=========================================

ELM  1          1.820.771.00
    TACHO SENSOR                                                                   P01
-----------------------------------------
PNT SIGNAL NAME  COLOR LV TYPE                                                      F
-----------------------------------------
 1  + 0.0
 2  + 0.0
 3  + 5.6
 4  + 5.6
 5  +15.0
 6  -15.0
 7  AN-RES1
 8  TD-TML2
 9  TD-TML1
10
-----------------------------------------

ELM  2
    FROM GRP33, ELM 03                                                             P02
-----------------------------------------
PNT SIGNAL NAME  COLOR LV TYPE                                                      F
-----------------------------------------
 1  +VMOT        2        AX
 2  -VMOT        0        AX
-----------------------------------------

GRP 37          1.820.192.00
    SPOOLING MOTOR ASSEMBLY, RIGHT
=========================================

ELM  1          1.820.771.00
    TACHO SENSOR                                                                   P01
-----------------------------------------
PNT SIGNAL NAME  COLOR LV TYPE                                                      F
-----------------------------------------
 1  + 0.0
 2  + 0.0
 3  + 5.6
 4  + 5.6
 5  +15.0
 6  -15.0
 7  AN-RES2
 8  TD-TMR2
 9  TD-TMR1
10
-----------------------------------------

ELM  2
    FROM GRP30, ELM 03                                                             P02
-----------------------------------------
PNT SIGNAL NAME  COLOR LV TYPE                                                      F
-----------------------------------------
 1  +VMOT        2        AX
 2  -VMOT        0        AX
-----------------------------------------
```

WILLI STUDER AG * L O C A T I O N P I N L I S T * 89/07/20 * 8:15 * P A G E 60
* TAPE TRANSPORT & AUDIO MCH * * 89/04/19 - 00

ASY 1 TAPE DECK <-- <-- <-- CONTINUATION

GRP 38 1.021.695.00
CAPSTAN MOTOR (ELECTRONICS BOARD)

ELM 1
FROM GRP39, ELM02 J01

PNT	SIGNAL NAME	COLOR	LV	TYPE	F
1	CPHASE-R	2		F	
2	CPHASE-T	9		F	
3	CPHASE-S	0		F	
4	TC-HALL1			F	
5					
6	+15.0			F	
7	TC-HALL2			F	
8	TD-TCM1			F	
9	+ 5V			F	
10	TC-HALL3			F	
11	TD-TCM2			F	
12	+ 0.0			F	

ELM 2 1.021.696.00
TACHO SENSOR UNIT (WIRE FIELD)

PNT	SIGNAL NAME	COLOR	LV	TYPE	F
1		3		U	
2		4		U	
3		5		U	
4		6		U	

ELM 3 1.021.697.00
HALL SENSOR BOARD (WIRE FIELD)

PNT	SIGNAL NAME	COLOR	LV	TYPE	F
1		0		U	
2		2		U	
3		3		U	
4		4		U	
5		5		U	
6		6		U	
7		7		U	
8		8		U	

GRP 38 1.021.695.00
<-- <-- <-- CONTINUATION

ELM 4
STATOR (WIRE FIELD)

PNT	SIGNAL NAME	COLOR	LV	TYPE	F
1	CPHASE-R	2		L	
2	CPHASE-S	0		L	
3	CPHASE-T	9		L	

ELM 5
GROUND CONNECTION (WIRE FIELD)

PNT	SIGNAL NAME	COLOR	LV	TYPE	F
1	GND	0		L	

GRP 39 1.820.774.00
CAPSTAN MOTOR DRIVE AMPLIFIER

ELM 1
FROM GRP20, ELM03 (BASIS B. TD) P01

PNT	SIGNAL NAME	COLOR	LV	TYPE	F
1	+ 0.0				
2	+ 0.0				
3	+ 5.6				
4	+ 5.6				
5	+15.0				
6	-15.0				
7	AN-CSPDC				
8	TD-TCM1				
9	+ 0.0				
10	TD-TCM2				
11	T-SPDSL1				
12	T-SPDSL2				
13	TC-CPREF				
14	TC-CAPDC				
15	TD-C76K				
16	+ 0.0				

ELM 2
TO GRP38, ELM01 (CAPSTAN MOTOR) P02

PNT	SIGNAL NAME	COLOR	LV	TYPE	F
1	CPHASE-R			M	
2	CPHASE-T			M	
3	CPHASE-S			M	
4	TC-HALL1			M	
5	-15.0			M	
6	+15.0			M	
7	TC-HALL2			M	
8	TD-TCM1			M	
9	+ 5V			M	
10	TC-HALL3			M	
11	TD-TCM2			M	
12	+ 0.0			M	

WILLI STUDER AG * L O C A T I O N P I N L I S T * 89/07/20 * 8:15 * P A G E 61
* TAPE TRANSPORT & AUDIO MCH * * 89/04/19 - 00

ASY 1 TAPE DECK <-- <-- <-- CONTINUATION

GRP 39 1.820.774.00
<-- <-- <-- CONTINUATION

ELM 3
FROM GRP20, ELM71 (BASIS B. TD) P03

PNT	SIGNAL NAME	COLOR	LV	TYPE	F
1	OSTABIN			M	
2					
3					
4					
5					
6	+STABIN3			M	

GRP 40 1.080.230.00
BRAKE ASSEMBLY, LEFT

ELM 1
BRAKE SOLENOID

PNT	SIGNAL NAME	COLOR	LV	TYPE	F
1	+24.0	7		M	
2	K-BRAKEL	1		M	
3					

GRP 41 1.080.240.00
BRAKE ASSEMBLY, RIGHT

ELM 1
BRAKE SOLENOID

PNT	SIGNAL NAME	COLOR	LV	TYPE	F
1	+24.0	7		M	
2	K-BRAKER	4		M	
3					

WILLI STUDER AG * L O C A T I O N P I N L I S T * 89/07/20 * 8:15 * P A G E 62
* TAPE TRANSPORT & AUDIO MCH * * 89/04/19 - 00

ASY 1 TAPE DECK <-- <-- <-- CONTINUATION

GRP 42 1.820.772.00
TAPE TENSION SENSOR, LEFT

ELM 1
FROM GRP20, ELM12 (BASIS B. TD) P01

PNT	SIGNAL NAME	COLOR	LV	TYPE	F
1	+ 0.0				
2	+ 0.0				
3	+ 5.6				
4	+ 5.6				
5	+15.0				
6	-15.0				
7					
8					
9	AN-TTL				
10					

GRP 43 1.820.772.00
TAPE TENSION SENSOR, RIGHT

ELM 1
FROM GRP20, ELM13 (BASIS B. TD) P01

PNT	SIGNAL NAME	COLOR	LV	TYPE	F
1	+ 0.0				
2	+ 0.0				
3	+ 5.6				
4	+ 5.6				
5	+15.0				
6	-15.0				
7					
8					
9	AN-TTR				
10					

GRP 44 1.820.793.00
OPTO + EXTENDED SENSORS

ELM 1
FROM GRP20, ELM06 P01

PNT	SIGNAL NAME	COLOR	LV	TYPE	F
1	+ 0.0				
2	+ 0.0				
3	+ 5.6				
4	+ 5.6				
5	+15.0				
6	-15.0				
7	TD-YTRSP				
8	TD-SHLD				
9	TD-TRSP				
10	TD-TRSPR				

```
*    WILLI STUDER AG    *    L O C A T I O N     P I N     L I S T            * 89/07/20  *   8:15  *  P A G E  63   *
*                            * TAPE TRANSPORT & AUDIO MCH *                    * 89/04/19 - 00                        *
ASY  1                       TAPE DECK                                                    <--  <--  <--  CONTINUATION

GRP 45        1.820.770.00
    MOVE SENSOR
=======================================

ELM  1
    FROM GRP20, ELM11                                              P01
---------------------------------------
PNT SIGNAL NAME  COLOR LV TYPE                                      F
---------------------------------------
 1  + 0.0
 2  + 0.0
 3  + 5.6
 4  + 5.6
 5  +15.0
 6  -15.0
 7  AN-RES3
 8  TD-MOVE2
 9  TD-MOVE1
10
---------------------------------------

GRP 46        1.820.773.00
    TAPE LIFTER CONTROL, LEFT
=======================================

ELM  1
    FROM GRP20, ELM07                                              P01
---------------------------------------
PNT SIGNAL NAME  COLOR LV TYPE                                      F
---------------------------------------
 1  + 0.0
 2  + 0.0
 3  + 5.6
 4  + 5.6
 5  +26.0
 6  -26.0
 7
 8
 9
10
11  TD-RALP1
12  TD-RALC2
13  TD-RALP2
14  TD-RALC1
15  TD-RALEN
16
---------------------------------------

GRP 47        1.820.773.00
    TAPE LIFTER CONTROL, RIGHT
=======================================

ELM  1
    FROM GRP20, ELM08 (BASIS B. TD)                                P01
---------------------------------------
PNT SIGNAL NAME  COLOR LV TYPE                                      F
---------------------------------------
 1  + 0.0
 2  + 0.0
 3  + 5.6
 4  + 5.6
 5  +26.0
 6  -26.0
 7
 8
 9
10
11  TD-RARP1
12  TD-RARC2
13  TD-RARP2
14  TD-RARC1
15  TD-RAREN
16
---------------------------------------
```

```
*    WILLI STUDER AG    *    L O C A T I O N     P I N     L I S T            * 89/07/20  *   8:15  *  P A G E  64   *
*                            * TAPE TRANSPORT & AUDIO MCH *                    * 89/04/19 - 00                        *
ASY  1                       TAPE DECK                                                    <--  <--  <--  CONTINUATION

GRP 48        1.820.240.00
    PUSHBUTTON ASSEMBLY
=======================================

ELM  1
    FROM GRP50, ELM03 (DISPLAY DRIVER)
---------------------------------------
PNT SIGNAL NAME  COLOR LV TYPE                                      F
---------------------------------------
 1  + 0.0
 2  + 0.0
 3  + 5.6
 4  + 5.6
 5  +24.0L
 6  BM-0.2
 7  BM-0.3
 8  BM-0.4
 9  BM-0.5
10  BM-0.6
11  BM-0.7
12  TM-ENO
13  TM-RL7
14  TM-RL6
15  TM-RL5
16  TM-RL4
17  TM-RL3
18  TM-RL2
19  TM-RL1
20  TM-CUE1
21
22  TM-CUE2
23
24  ANM-SH3
25  ANM-SH2
26  ANM-SH1
---------------------------------------

ELM  2
    CONNECTOR EDIT ASSEMBLY
---------------------------------------
PNT SIGNAL NAME  COLOR LV TYPE                                      F
---------------------------------------
 1  + 0.0
 2  + 0.0
 3  + 5.0
 4  TM-ENO
 5  TM-CUE1
 6  TM-RL1
 7  TM-CUE2
 8  ANM-SH1
 9  ANM-SH3
10  ANM-SH2
---------------------------------------

GRP 48        1.820.240.00
                        <--  <--  <--  CONTINUATION
=======================================

ELM  3
    WIRE FIELD
---------------------------------------
PNT SIGNAL NAME  COLOR LV TYPE                                      F
---------------------------------------
 1  +24.0L
 2  +24.0L
 3  BM-0.7
 4  BM-0.6
 5  BM-0.5
 6  BM-0.4
 7  BM-0.3
 8  BM-0.2
 9
10
---------------------------------------

GRP 49        1.820.250.00
    EDIT ASSEMBLY
=======================================

ELM  1
    FROM GRP48, ELM02 (PUSHBUTTON BOARD)
---------------------------------------
PNT SIGNAL NAME  COLOR LV TYPE                                      F
---------------------------------------
 1  + 0.0
 2  + 0.0
 3  + 5.0
 4  TM-ENO
 5  TM-CUE1
 6  TM-RL1
 7  TM-CUE2
 8  ANM-SH1
 9  ANM-SH3
10  ANM-SH2
---------------------------------------

ELM  2
    WIRE FIELD
---------------------------------------
PNT SIGNAL NAME  COLOR LV TYPE                                      F
---------------------------------------
 1  + 5.0
 2  TM-ENO
 3
 4  TM-RL1
 5  + 0.0
---------------------------------------
```

WILLI STUDER AG * L O C A T I O N P I N L I S T * 89/07/20 * 8:15 * P A G E 65
* TAPE TRANSPORT & AUDIO MCH * * 89/04/19 - 00
ASY 1 TAPE DECK <-- <-- <-- CONTINUATION

GRP 50 1.820.768.00
TAPE DECK DISPLAY DRIVER

ELM 1
FROM GRP20, ELM15 (BASIS B. TD) P01

PNT	SIGNAL NAME	COLOR	LV	TYPE	F
1	+ 0.0				
2	+ 0.0				
3	+ 5.6				
4	+ 5.6				
5	+24.0				
6	+24.0				
7	TM-DSL4				
8	TM-ISL4				
9	TM-DRES				
10	TM-IRES				
11	TM-DRW				
12	TM-IRW				
13	TM-DENB				
14	TM-IENB				
15	TM-DADR2				
16	TM-IADR2				
17	TM-DADR1				
18	TM-IADR1				
19	TM-DADR0				
20	TM-IADR0				
21	TM-SHIR				
22	0.0 VCU				
23	TM-KBIR				
24	0.0 VCU				
25	TM-DATA7				
26	0.0 VCU				
27	TM-DATA6				
28	0.0 VCU				
29	TM-DATA5				
30	0.0 VCU				
31	TM-DATA4				
32	0.0 VCU				
33	TM-DATA3				
34	0.0 VCU				
35	TM-DATA2				
36	0.0 VCU				
37	TM-DATA1				
38	0.0 VCU				
39	TM-DATA0				
40	0.0 VCU				

GRP 50 1.820.768.00
<-- <-- <-- CONTINUATION

ELM 2
CONNECTOR PUSHBUTTON ASSEMBLY P03

PNT	SIGNAL NAME	COLOR	LV	TYPE	F
1	+ 0.0				
2	+ 0.0				
3	+ 5.6				
4	+ 5.6				
5					
6	TM-EN4				
7	TM-EN3				
8	TM-EN2				
9	TM-EN1				
10	TM-RL6				
11	TM-RL7				
12	TM-RL0				
13	TM-RL1				
14	TM-RL2				
15	TM-RL3				
16	TM-RL4				
17	TM-RL5				
18	TM-B				
19	TM-DP				
20	TM-A				
21	TM-C				
22	TM-D				
23	TM-F				
24	TM-E				
25	TM-G				
26	TM-D9				
27	TM-D8				
28	TM-D7				
29	TM-D6				
30	TM-D5				
31	TM-D4				
32	TM-D3				
33	TM-D2				
34	TM-D1				
35	TM-D0				
36	TM-L2				
37	TM-L1				
38	TM-L3				
39	TM-L4				
40	TM-L5				

GRP 50 1.820.768.00
<-- <-- <-- CONTINUATION

ELM 3
CONNECTOR COMMAND UNIT P02

PNT	SIGNAL NAME	COLOR	LV	TYPE	F
1	+ 0.0				
2	+ 0.0				
3	+ 5.6				
4	+ 5.6				
5	+24.0L				
6	BM-0.2				
7	BM-0.3				
8	BM-0.4				
9	BM-0.5				
10	BM-0.6				
11	BM-0.7				
12	TM-EN0				
13	TM-RL7				
14	TM-RL6				
15	TM-RL5				
16	TM-RL4				
17	TM-RL3				
18	TM-RL2				
19	TM-RL1				
20	TM-CUE1				
21					
22	TM-CUE2				
23					
24	ANM-SH3				
25	ANM-SH2				
26	ANM-SH1				

./.

WILLI STUDER AG * L O C A T I O N P I N L I S T * 89/07/20 * 8:15 * P A G E 66
* TAPE TRANSPORT & AUDIO MCH * * 89/04/19 - 00
ASY 1 TAPE DECK <-- <-- <-- CONTINUATION

GRP 50 1.820.768.00
<-- <-- <-- CONTINUATION

ELM 4
CONNECTOR LCD DISPLAY UNIT P04

PNT	SIGNAL NAME	COLOR	LV	TYPE	F
1	+ 0.0				
2	+ 5.0				
3	TL-CS				
4	TL-ENB				
5	TL-WR				
6	TL-A0				
7	TL-D0				
8	TL-D1				
9	TL-D2				
10	TL-D3				
11	TL-D4				
12	TL-D5				
13	TL-D6				
14	TL-D7				
15	TL-RESET				
16	+ 0.0				

GRP 51 1.820.767.00
COMMAND UNIT

ELM 1
FROM GRP50,ELM02 (DISPLAY DRIVER)

PNT	SIGNAL NAME	COLOR	LV	TYPE	F
1	+ 0.0				
2	+ 0.0				
3	+ 5.6				
4	+ 5.6				
5					
6	TM-EN4				
7	TM-EN3				
8	TM-EN2				
9	TM-EN1				
10	TM-RL6				
11	TM-RL7				
12	TM-RL0				
13	TM-RL1				
14	TM-RL2				
15	TM-RL3				
16	TM-RL4				
17	TM-RL5				
18	TM-B				
19	TM-DP				
20	TM-A				
21	TM-C				
22	TM-D				
23	TM-F				
24	TM-E				
25	TM-G				
26	TM-D9				
27	TM-D8				
28	TM-D7				
29	TM-D6				
30	TM-D5				
31	TM-D4				
32	TM-D3				
33	TM-D2				
34	TM-D1				
35	TM-D0				
36	TM-L2				
37	TM-L1				
38	TM-L3				
39	TM-L4				
40	TM-L5				

GRP 52 1.820.233.00
LCD DISPLAY UNIT

ELM 1
FROM GRP50, ELM04 (DISPLAY DRIVER)

PNT	SIGNAL NAME	COLOR	LV	TYPE	F
1	+ 0.0				
2	+ 5.0				
3	TL-CS				
4	TL-ENB				
5	TL-WR				
6	TL-A0				
7	TL-D0				
8	TL-D1				
9	TL-D2				
10	TL-D3				
11	TL-D4				
12	TL-D5				
13	TL-D6				
14	TL-D7				
15	TL-RESET				
16	+ 0.0				

```
*****************************************************************************************************************************
*    WILLI STUDER AG   *    L O C A T I O N     P I N     L I S T            * 89/07/20 *   8:15 *  P A G E  67   *
*****************************************************************************************************************************
*                              * TAPE TRANSPORT & AUDIO MCH *                 * 89/04/19 - 00                          *
*****************************************************************************************************************************
ASY  1                          TAPE DECK                                                    <--  <--  <--  CONTINUATION

GRP 53          1.820.718.82
    COMMUNICATIONS CONTROLLER, FRONT
=======================================

ELM  1
    CONNECTOR DATA BACK UP, FRONT P. J01
---------------------------------------
PNT SIGNAL NAME  COLOR LV TYPE          F
---------------------------------------
 1  + 0.0        1        B
 2  ATRANS       4        B
 3  ARECEIVB     8        B
 4
 5
 6
 7  ATRANSB      2        B
 8  ARECEIV      3        B
 9
---------------------------------------

GRP 59          1.820.866.00
    FUSE/SUPPLY FAILURE DETECTOR
=======================================

ELM  1
    FROM GRP20, ELM14 (BASIS B. TD)  P01
---------------------------------------
PNT SIGNAL NAME  COLOR LV TYPE          F
---------------------------------------
 1  +STABIN3
 2  +STABIN3
 3
 4  +24.0
 5  +STABIN2
 6  T-SUPVON
 7  +STABIN1
 8  +STABIN1
 9  + 5.6
10  + 5.6
11  + 0.0
12  + 0.0
13  -15.0
14  +15.0
15  +26.0
16  -26.0
---------------------------------------

GRP 60          1.820.831.00
    PINCH ROLLER GATE
=======================================

ELM  1
    FROM GR. 20 ELM 08               P01
---------------------------------------
PNT SIGNAL NAME  COLOR LV TYPE          F
---------------------------------------
 1  + 0.0
 2  + 0.0
 3  + 5.6
 4  + 5.6
 5  +26.0
 6  -26.0
 7
 8
 9
10
11  TD-RARP1
12  TD-RARC2
13  TD-RARP2
14  TD-RARC1
15  TD-RAREN
16
---------------------------------------

ELM  2
    FROM GR. 20 ELM 11               P02
---------------------------------------
PNT SIGNAL NAME  COLOR LV TYPE          F
---------------------------------------
 1  + 0.0
 2  + 0.0
 3  + 5.6
 4  + 5.6
 5  +15.0
 6  -15.0
 7  AN-RES3
 8  TD-MOVE2
 9  TD-MOVE1
10
---------------------------------------
```

```
*****************************************************************************************************************************
*    WILLI STUDER AG   *    L O C A T I O N     P I N     L I S T            * 89/07/20 *   8:15 *  P A G E  68   *
*****************************************************************************************************************************
*                              * TAPE TRANSPORT & AUDIO MCH *                 * 89/04/19 - 00                          *
*****************************************************************************************************************************
ASY  1                          TAPE DECK                                                    <--  <--  <--  CONTINUATION

GRP 60          1.820.831.00
                <--  <--  <--  CONTINUATION
=======================================

ELM  3
    FROM GR. 20 ELM 10               P03
---------------------------------------
PNT SIGNAL NAME  COLOR LV TYPE          F
---------------------------------------
 1  + 0.0
 2  + 0.0
 3  + 5.6
 4  + 5.6
 5  +15.0
 6  -15.0
 7  AN-RES2
 8  TD-TMR2
 9  TD-TMR1
10
---------------------------------------

ELM  4
    FROM GR. 20 ELM 09               P04
---------------------------------------
PNT SIGNAL NAME  COLOR LV TYPE          F
---------------------------------------
 1  + 0.0
 2  + 0.0
 3  + 5.6
 4  + 5.6
 5  +15.0
 6  -15.0
 7  AN-RES1
 8  TD-TML2
 9  TD-TML1
10
---------------------------------------
                                    ./.

GRP 60          1.820.831.00
                <--  <--  <--  CONTINUATION
=======================================

ELM  5
    TO TAPE LIFT MOTOR, RIGHT        P05
---------------------------------------
PNT SIGNAL NAME  COLOR LV TYPE          F
---------------------------------------
 1  + 0.0
 2  + 0.0
 3  + 5.6
 4  + 5.6
 5  +26.0
 6  -26.0
 7
 8
 9
10
11  TD-RARP1
12  TD-RARC2
13  TD-RARP2
14  TD-RARC1
15  TD-RAREN
16
---------------------------------------

ELM  6
    TO MOVE SENSOR                   P06
---------------------------------------
PNT SIGNAL NAME  COLOR LV TYPE          F
---------------------------------------
 1  + 0.0
 2  + 0.0
 3  + 5.6
 4  + 5.6
 5  +15.0
 6  -15.0
 7  AN-RES3
 8  TD-MOVE2
 9  TD-MOVE1
10
---------------------------------------

GRP 60          1.820.831.00
                <--  <--  <--  CONTINUATION
=======================================

ELM  7
    TO TACHO SENSOR SP. MOTOR RIGHT  P07
---------------------------------------
PNT SIGNAL NAME  COLOR LV TYPE          F
---------------------------------------
 1  + 0.0
 2  + 0.0
 3  + 5.6
 4  + 5.6
 5  +15.0
 6  -15.0
 7  AN-RES2
 8  TD-TMR2
 9  TD-TMR1
10
---------------------------------------

ELM  8
    TO TACHO SENSOR SP. MOTOR LEFT   P08
---------------------------------------
PNT SIGNAL NAME  COLOR LV TYPE          F
---------------------------------------
 1  + 0.0
 2  + 0.0
 3  + 5.6
 4  + 5.6
 5  +15.0
 6  -15.0
 7  AN-RES1
 8  TD-TML2
 9  TD-TML1
10
---------------------------------------
```

```
*****************************************************************************************************************************
*    WILLI STUDER AG   *    L O C A T I O N     P I N     L I S T            *  89/07/20  *   8:15  *  P A G E  69    *
*****************************************************************************************************************************
*                              * TAPE TRANSPORT & AUDIO MCH *                  *  89/04/19 - 00                          *
*****************************************************************************************************************************
ASY  2                        HEAD BLOCK, PREAMPLIFIER, LINE
```

GRP 1 1.050.152.00
HEAD BLOCK ASSEMBLY (24 CH)

ELM 1
ERASE HEAD, CH 01 TO 08 P01

PNT	SIGNAL NAME	COLOR LV	TYPE	F
1	ERAHH-08			
2	ERAHO-08			
3	ERAHH-07			
4	ERAHH-06			
5	ERAHO-06			
6	ERAHH-05			
7	ERAHH-04			
8	ERAHO-04			
9	ERAHH-03			
10	ERAHH-02			
11	ERAHO-02			
12	ERAHH-01			
13				
14	ERAHL-08			
15	ERAHO-07			
16	ERAHL-07			
17	ERAHL-06			
18	ERAHO-05			
19	ERAHL-05			
20	ERAHL-04			
21	ERAHO-03			
22	ERAHL-03			
23	ERAHL-02			
24	ERAHO-01			
25	ERAHL-01			

GRP 1 1.050.152.00
<-- <-- <-- CONTINUATION

ELM 2
ERASE HEAD, CH 09 TO 16 P02

PNT	SIGNAL NAME	COLOR LV	TYPE	F
1	ERAHH-16			
2	ERAHO-16			
3	ERAHH-15			
4	ERAHH-14			
5	ERAHO-14			
6	ERAHH-13			
7	ERAHH-12			
8	ERAHO-12			
9	ERAHH-11			
10	ERAHH-10			
11	ERAHO-10			
12	ERAHH-09			
13				
14	ERAHL-16			
15	ERAHO-15			
16	ERAHL-15			
17	ERAHL-14			
18	ERAHO-13			
19	ERAHL-13			
20	ERAHL-12			
21	ERAHO-11			
22	ERAHL-11			
23	ERAHL-10			
24	ERAHO-09			
25	ERAHL-09			

GRP 1 1.050.152.00
<-- <-- <-- CONTINUATION

ELM 3
ERASE HEAD, CH 17 TO 24 P03

PNT	SIGNAL NAME	COLOR LV	TYPE	F
1	ERAHH-24			
2	ERAHO-24			
3	ERAHH-23			
4	ERAHH-22			
5	ERAHO-22			
6	ERAHH-21			
7	ERAHH-20			
8	ERAHO-20			
9	ERAHH-19			
10	ERAHH-18			
11	ERAHO-18			
12	ERAHH-17			
13				
14	ERAHL-24			
15	ERAHO-23			
16	ERAHL-23			
17	ERAHL-22			
18	ERAHO-21			
19	ERAHL-21			
20	ERAHL-20			
21	ERAHO-19			
22	ERAHL-19			
23	ERAHL-18			
24	ERAHO-17			
25	ERAHL-17			

```
*****************************************************************************************************************************
*    WILLI STUDER AG   *    L O C A T I O N     P I N     L I S T            *  89/07/20  *   8:15  *  P A G E  70    *
*****************************************************************************************************************************
*                              * TAPE TRANSPORT & AUDIO MCH *                  *  89/04/19 - 00                          *
*****************************************************************************************************************************
ASY  2                        HEAD BLOCK, PREAMPLIFIER, LINE                                    <-- <-- <-- CONTINUATION
```

GRP 1 1.050.152.00
<-- <-- <-- CONTINUATION

ELM 4
RECORD HEAD, CH 01 TO 08 P04

PNT	SIGNAL NAME	COLOR LV	TYPE	F
1				
2				
3				
4	RECHH-08	1	A	
5	RECHH-07	1	A	
6	RECHH-06	1	A	
7	RECHH-05	1	A	
8	RECHH-04	1	A	
9	RECHH-03	1	A	
10	RECHH-02	1	A	
11	RECHH-01	1	A	
12				
13				
14				
15				
16				
17	RECHL-08	0	A	
18	RECHL-07	0	A	
19	RECHL-06	0	A	
20	RECHL-05	0	A	
21	RECHL-04	0	A	
22	RECHL-03	0	A	
23	RECHL-02	0	A	
24	RECHL-01	0	A	
25				

GRP 1 1.050.152.00
<-- <-- <-- CONTINUATION

ELM 5
RECORD HEAD, CH 09 TO 16 P05

PNT	SIGNAL NAME	COLOR LV	TYPE	F
1				
2				
3				
4	RECHH-16	1	A	
5	RECHH-15	1	A	
6	RECHH-14	1	A	
7	RECHH-13	1	A	
8	RECHH-12	1	A	
9	RECHH-11	1	A	
10	RECHH-10	1	A	
11	RECHH-09	1	A	
12				
13				
14				
15				
16				
17	RECHL-16	0	A	
18	RECHL-15	0	A	
19	RECHL-14	0	A	
20	RECHL-13	0	A	
21	RECHL-12	0	A	
22	RECHL-11	0	A	
23	RECHL-10	0	A	
24	RECHL-09	0	A	
25				

GRP 1 1.050.152.00
<-- <-- <-- CONTINUATION

ELM 6
RECORD HEAD, CH 17 TO 24 P06

PNT	SIGNAL NAME	COLOR LV	TYPE	F
1				
2				
3				
4	RECHH-24	1	A	
5	RECHH-23	1	A	
6	RECHH-22	1	A	
7	RECHH-21	1	A	
8	RECHH-20	1	A	
9	RECHH-19	1	A	
10	RECHH-18	1	A	
11	RECHH-17	1	A	
12				
13				
14				
15				
16				
17	RECHL-24	0	A	
18	RECHL-23	0	A	
19	RECHL-22	0	A	
20	RECHL-21	0	A	
21	RECHL-20	0	A	
22	RECHL-19	0	A	
23	RECHL-18	0	A	
24	RECHL-17	0	A	
25				

```
*    WILLI STUDER AG   *    L O C A T I O N     P I N     L I S T            * 89/07/20 *   8:15 *   P A G E  71   *
*                                 * TAPE TRANSPORT & AUDIO MCH *                * 89/04/19 - 00                      *
ASY  2                          HEAD BLOCK, PREAMPLIFIER, LINE                                  <--  <--  <--  CONTINUATION

GRP  1          1.050.152.00
                <--  <--  <--  CONTINUATION
=========================================

ELM  7
     REPRODUCE HEAD, CH 01 TO 08                                P07
-----------------------------------------------------------------
PNT SIGNAL NAME  COLOR LV TYPE                                   F
-----------------------------------------------------------------
 1  AN-TLKUC
 2  + 5.6
 3  +15.0
 4  REPHH-08      1         A
 5  REPHH-07      1         A
 6  REPHH-06      1         A
 7  REPHH-05      1         A
 8  REPHH-04      1         A
 9  REPHH-03      1         A
10  REPHH-02      1         A
11  REPHH-01      1         A
12  Y-CRTALK
13  AN-TLK01
14  AN-TLK08
15  -15.0
16  + 0.0
17  REPHL-08      0         A
18  REPHL-07      0         A
19  REPHL-06      0         A
20  REPHL-05      0         A
21  REPHL-04      0         A
22  REPHL-03      0         A
23  REPHL-02      0         A
24  REPHL-01      0         A
25  AN-TLKLC
-----------------------------------------------------------------

GRP  1          1.050.152.00
                <--  <--  <--  CONTINUATION
=========================================

ELM  8
     REPRODUCE HEAD, CH 09 TO 16                                P08
-----------------------------------------------------------------
PNT SIGNAL NAME  COLOR LV TYPE                                   F
-----------------------------------------------------------------
 1  AN-TLKUC
 2  + 5.6
 3  +15.0
 4  REPHH-16      1         A
 5  REPHH-15      1         A
 6  REPHH-14      1         A
 7  REPHH-13      1         A
 8  REPHH-12      1         A
 9  REPHH-11      1         A
10  REPHH-10      1         A
11  REPHH-09      1         A
12  Y-CRTALK
13  AN-TLK09
14  AN-TLK16
15  -15.0
16  + 0.0
17  REPHL-16      0         A
18  REPHL-15      0         A
19  REPHL-14      0         A
20  REPHL-13      0         A
21  REPHL-12      0         A
22  REPHL-11      0         A
23  REPHL-10      0         A
24  REPHL-09      0         A
25  AN-TLKLC
-----------------------------------------------------------------

GRP  1          1.050.152.00
                <--  <--  <--  CONTINUATION
=========================================

ELM  9
     REPRODUCE HEAD, CH 17 TO 24                                P09
-----------------------------------------------------------------
PNT SIGNAL NAME  COLOR LV TYPE                                   F
-----------------------------------------------------------------
 1  AN-TLKUC
 2  + 5.6
 3  +15.0
 4  REPHH-24      1         A
 5  REPHH-23      1         A
 6  REPHH-22      1         A
 7  REPHH-21      1         A
 8  REPHH-20      1         A
 9  REPHH-19      1         A
10  REPHH-18      1         A
11  REPHH-17      1         A
12  Y-CRTALK
13  AN-TLK17
14  AN-TLK24
15  -15.0
16  + 0.0
17  REPHL-24      0         A
18  REPHL-23      0         A
19  REPHL-22      0         A
20  REPHL-21      0         A
21  REPHL-20      0         A
22  REPHL-19      0         A
23  REPHL-18      0         A
24  REPHL-17      0         A
25  AN-TLKLC
-----------------------------------------------------------------
```

```
*    WILLI STUDER AG   *    L O C A T I O N     P I N     L I S T            * 89/07/20 *   8:15 *   P A G E  72   *
*                                 * TAPE TRANSPORT & AUDIO MCH *                * 89/04/19 - 00                      *
ASY  2                          HEAD BLOCK, PREAMPLIFIER, LINE                                  <--  <--  <--  CONTINUATION

GRP  1          1.050.152.00
                <--  <--  <--  CONTINUATION
=========================================

ELM 10          1.820.795.00
     HEAD BLOCK IDENTIFIER                                      P10
-----------------------------------------------------------------
PNT SIGNAL NAME  COLOR LV TYPE                                   F
-----------------------------------------------------------------
 1  + 0.0
 2  + 5.6
 3  +15.0
 4  T-SADA
 5  T-SADC
 6  T-WRTSL
 7  T-DT-RP2
 8  T-DT-MP
 9
10
11
12
13  + 0.0
14  + 0.0
15  + 5.6
16  -15.0
17  T-SADB
18  T-READSL
19  T-DT-RP1
20  T-DT-SJM
21  T-DT-RES
22
23  + 0.0
24  + 0.0
25  +24.0
-----------------------------------------------------------------

GRP  2          1.820.808.00
     PREAMPLIFIER, CH 01 TO 08
=========================================

ELM  1
     INPUT                                                      J01
-----------------------------------------------------------------
PNT SIGNAL NAME  COLOR LV TYPE                                   F
-----------------------------------------------------------------
 1  AN-TLKUC
 2  + 5.6
 3  +15.0
 4  REPHH-08
 5  REPHH-07
 6  REPHH-06
 7  REPHH-05
 8  REPHH-04
 9  REPHH-03
10  REPHH-02
11  REPHH-01
12  Y-CRTALK
13  AN-TLK01
14  AN-TLK08
15  -15.0
16  + 0.0
17  REPHL-08
18  REPHL-07
19  REPHL-06
20  REPHL-05
21  REPHL-04
22  REPHL-03
23  REPHL-02
24  REPHL-01
25  AN-TLKLC
-----------------------------------------------------------------

GRP  2          1.820.808.00
                <--  <--  <--  CONTINUATION
=========================================

ELM  2
     OUTPUT                                                     P01
-----------------------------------------------------------------
PNT SIGNAL NAME  COLOR LV TYPE                                   F
-----------------------------------------------------------------
 1  GND
 2  + 5.6
 3  +15.0
 4  REPRE-08
 5  REPRE-07
 6  REPRE-06
 7  REPRE-05
 8  REPRE-04
 9  REPRE-03
10  REPRE-02
11  REPRE-01
12  Y-CRTALK
13  RESERVE
14  GND
15  -15.0
16  + 0.0
17  REPRO-08
18  REPRO-07
19  REPRO-06
20  REPRO-05
21  REPRO-04
22  REPRO-03
23  REPRO-02
24  REPRO-01
25  RESERVE
-----------------------------------------------------------------
```

```
*****************************************************************************************************************************
*    WILLI STUDER AG   *    L O C A T I O N     P I N     L I S T            *  89/07/20  *   8:15  *  P A G E  73   *
*****************************************************************************************************************************
*                              * TAPE TRANSPORT & AUDIO MCH *                 *  89/04/19 - 00                            *
*****************************************************************************************************************************
ASY  2                         HEAD BLOCK, PREAMPLIFIER, LINE                                    <--  <--  <--  CONTINUATION
```

GRP 3 1.820.808.00
PREAMPLIFIER, CH 09 TO 16

ELM 1
INPUT J01

PNT	SIGNAL NAME	COLOR	LV	TYPE	F
1	AN-TLKUC				
2	+ 5.6				
3	+15.0				
4	REPHH-16				
5	REPHH-15				
6	REPHH-14				
7	REPHH-13				
8	REPHH-12				
9	REPHH-11				
10	REPHH-10				
11	REPHH-09				
12	Y-CRTALK				
13	AN-TLK09				
14	AN-TLK16				
15	-15.0				
16	+ 0.0				
17	REPHL-16				
18	REPHL-15				
19	REPHL-14				
20	REPHL-13				
21	REPHL-12				
22	REPHL-11				
23	REPHL-10				
24	REPHL-09				
25	AN-TLKLC				

GRP 3 1.820.808.00
<-- <-- <-- CONTINUATION

ELM 2
OUTPUT P01

PNT	SIGNAL NAME	COLOR	LV	TYPE	F
1	GND				
2	+ 5.6				
3	+15.0				
4	REPRE-16				
5	REPRE-15				
6	REPRE-14				
7	REPRE-13				
8	REPRE-12				
9	REPRE-11				
10	REPRE-10				
11	REPRE-09				
12	Y-CRTALK				
13	RESERVE				
14	GND				
15	-15.0				
16	+ 0.0				
17	REPRO-16				
18	REPRO-15				
19	REPRO-14				
20	REPRO-13				
21	REPRO-12				
22	REPRO-11				
23	REPRO-10				
24	REPRO-09				
25	RESERVE				

GRP 4 1.820.808.00
PREAMPLIFIER, CH 17 TO 24

ELM 1
INPUT J01

PNT	SIGNAL NAME	COLOR	LV	TYPE	F
1	AN-TLKUC				
2	+ 5.6				
3	+15.0				
4	REPHH-24				
5	REPHH-23				
6	REPHH-22				
7	REPHH-21				
8	REPHH-20				
9	REPHH-19				
10	REPHH-18				
11	REPHH-17				
12	Y-CRTALK				
13	AN-TLK17				
14	AN-TLK24				
15	-15.0				
16	+ 0.0				
17	REPHL-24				
18	REPHL-23				
19	REPHL-22				
20	REPHL-21				
21	REPHL-20				
22	REPHL-19				
23	REPHL-18				
24	REPHL-17				
25	AN-TLKLC				

```
*****************************************************************************************************************************
*    WILLI STUDER AG   *    L O C A T I O N     P I N     L I S T            *  89/07/20  *   8:15  *  P A G E  74   *
*****************************************************************************************************************************
*                              * TAPE TRANSPORT & AUDIO MCH *                 *  89/04/19 - 00                            *
*****************************************************************************************************************************
ASY  2                         HEAD BLOCK, PREAMPLIFIER, LINE                                    <--  <--  <--  CONTINUATION
```

GRP 4 1.820.808.00
<-- <-- <-- CONTINUATION

ELM 2
OUTPUT P01

PNT	SIGNAL NAME	COLOR	LV	TYPE	F
1	GND				
2	+ 5.6				
3	+15.0				
4	REPRE-24				
5	REPRE-23				
6	REPRE-22				
7	REPRE-21				
8	REPRE-20				
9	REPRE-19				
10	REPRE-18				
11	REPRE-17				
12	Y-CRTALK				
13	RESERVE				
14	GND				
15	-15.0				
16	+ 0.0				
17	REPRO-24				
18	REPRO-23				
19	REPRO-22				
20	REPRO-21				
21	REPRO-20				
22	REPRO-19				
23	REPRO-18				
24	REPRO-17				
25	RESERVE				

GRP 5
GROUND CONNECTION

ELM 1

PNT	SIGNAL NAME	COLOR	LV	TYPE	F
1	GND	0		L	
2	GND	0		L	
3	GND	0		L	
4	GND				

```
*****************************************************************************************************************************
*   WILLI STUDER AG   *   L O C A T I O N   P I N   L I S T                 * 89/07/20  *  8:15  *  P A G E  75   *
*****************************************************************************************************************************
*                              * TAPE TRANSPORT & AUDIO MCH *                 * 89/04/19 - 00                             *
*****************************************************************************************************************************
ASY  3                        AUDIO ELECTRONICS, CH 01 TO 08

GRP  1        1.820.703.00
    BASISBOARD, CH 01 TO 04
=======================================

ELM  1        1.820.715.00
    LINE AMPLIFIER, CH 1                 J01
---------------------------------------------
PNT SIGNAL NAME  COLOR LV TYPE          F
---------------------------------------------
 1  MONIT-01
 2  + 0.0
 3  LOUFA-01
 4  LOUFB-01
 5  + 0.0
 6  INPDI-01
 7  INPAD-01
 8  RECIN-01
 9  + 0.0
10  TAPAD-01
11  TAPMS-01
12  TAPDI-01
13  + 0.0
14  LINFA-01
15  LINFB-01
16  CA-EQL01
17  CA-SYN01
18  CA-LS001
19  KEY
20  TA-ACT01
21  + 0.0
22  +15.0
23  -15.0
24  + 5.6
25  TA-C307K
26  CA-SAF01
27  CA-ADR-R
28  CA-ADR-S
29  CA-ADR-T
30  CA-ADR-U
31  CA-DATA0
32  CA-DATA1
33  CA-DATA2
34  CA-DATA3
35  CA-DATA4
36  CA-DATA5
37  CA-DATA6
38  CA-DATA7
39  CA-CHS01
---------------------------------------------
                                        ./.

GRP  1        1.820.703.00
              <--  <--  <--  CONTINUATION
=======================================

ELM  2        1.820.815.00
    CONTROLLER INTERNAL NRS CH 1         J02
---------------------------------------------
PNT SIGNAL NAME  COLOR LV TYPE          F
---------------------------------------------
 1A DLBIN-01
 1B + 0.0
 2A + 0.0
 2B DLBGN-01
 3A + 0.0
 3B + 0.0
 4A DLBOA-01
 4B + 0.0
 5A + 0.0
 5B DLBOB-01
 6A + 0.0
 6B + 0.0
 7A CD-ACT01
 7B CD-REP01
 8A CD-REC01
 8B CD-CAL01
 9A + 0.0
 9B + 0.0
10A MONIT-01
10B CA-TC-01
11A INPDI-01
11B INPAD-01
12A RECIN-01
12B
13A + 0.0
13B + 0.0
14A TAPAD-01
14B TAPDI-01
15A +15.0
15B +15.0
16A + 5.6
16B + 5.6
17A + 0.0
17B + 0.0
18A -15.0
18B -15.0
19A TONGEN
19B SGNGND
20A REFLEV
20B + 0.0
21A TA-C307K
21B CA-SAF01
22A TA-CMP01
22B CA-SAF-A
23A + 0.0
23B CA-LSW01
24A CA-LS001

GRP  1        1.820.703.00
              <--  <--  <--  CONTINUATION
=======================================

ELM  2        1.820.815.00
              <--  <--  <--  CONTINUATION
---------------------------------------------
PNT SIGNAL NAME  COLOR LV TYPE          F
---------------------------------------------
24B
25A CA-ADR-R
25B CA-ADR-S
26A CA-ADR-T
26B CA-ADR-U
27A CA-DATA0
27B CA-DATA1
28A CA-DATA2
28B CA-DATA3
29A CA-DATA4
29B CA-DATA5
30A CA-DATA6
30B CA-DATA7
31A + 0.0
31B + 0.0
32A CA-CHS01
32B + 0.0
---------------------------------------------
                                        ./.
```

```
*****************************************************************************************************************************
*   WILLI STUDER AG   *   L O C A T I O N   P I N   L I S T                 * 89/07/20  *  8:15  *  P A G E  76   *
*****************************************************************************************************************************
*                              * TAPE TRANSPORT & AUDIO MCH *                 * 89/04/19 - 00                             *
*****************************************************************************************************************************
ASY  3                        AUDIO ELECTRONICS, CH 01 TO 08                                <--  <--  <--  CONTINUATION

GRP  1        1.820.703.00
              <--  <--  <--  CONTINUATION
=======================================

ELM  3        1.820.710.00
    REPRODUCE AMPLIFIER, CH 1            J03
---------------------------------------------
PNT SIGNAL NAME  COLOR LV TYPE          F
---------------------------------------------
 1  TAPLI-01
 2  EQUAL-01
 3  SYPRE-01
 4  K-REC-01
 5  + 0.0
 6  REPRE-01
 7  REPRO-01
 8  + 0.0
 9  CA-TC-01
10  TAPDI-01
11  + 0.0
12  SYNHL-01
13  SYNHH-01
14  + 0.0
15  CA-EQL01
16  CA-SYN01
17  CA-LSW01
18  + 0.0
19  KEY
20  TA-ACT01
21  + 0.0
22  +15.0
23  -15.0
24  + 5.6
25  TA-C307K
26  CA-SAF01
27  CA-ADR-R
28  CA-ADR-S
29  CA-ADR-T
30  CA-ADR-U
31  CA-DATA0
32  CA-DATA1
33  CA-DATA2
34  CA-DATA3
35  CA-DATA4
36  CA-DATA5
37  CA-DATA6
38  CA-DATA7
39  CA-CHS01
---------------------------------------------

GRP  1        1.820.703.00
              <--  <--  <--  CONTINUATION
=======================================

ELM  4        1.820.811.00
    RECORD AMPLIFIER, CH 1               J04
---------------------------------------------
PNT SIGNAL NAME  COLOR LV TYPE          F
---------------------------------------------
 1  RECIN-01
 2  EQUAL-01
 3  BIAFB-01
 4  K-REC-01
 5  + 0.0
 6  BIASA-01
 7  BIASB-01
 8  BIASC-01
 9  RECHL-01
10  RECHH-01
11  + 0.0
12  SYNHL-01
13  SYNHH-01
14  + 0.0
15  AFCSW-01
16  + 0.0
17  CA-BAD01
18  CA-RSW01
19  KEY
20  TA-ACT01
21  + 0.0
22  +15.0
23  -15.0
24  + 5.6
25  TA-C307K
26  CA-SAF01
27  CA-ADR-R
28  CA-ADR-S
29  CA-ADR-T
30  CA-ADR-U
31  CA-DATA0
32  CA-DATA1
33  CA-DATA2
34  CA-DATA3
35  CA-DATA4
36  CA-DATA5
37  CA-DATA6
38  CA-DATA7
39  CA-CHS01
---------------------------------------------

GRP  1        1.820.703.00
              <--  <--  <--  CONTINUATION
=======================================

ELM  5        1.820.813.00
    HF-DRIVER, CH 1                      J05
---------------------------------------------
PNT SIGNAL NAME  COLOR LV TYPE          F
---------------------------------------------
 1  BIAFB-01
 2  K-REC-01
 3  + 0.0
 4  + 0.0
 5  BIASA-01
 6  BIASB-01
 7  BIASC-01
 8
 9  ERACS-01
10  AFCSW-01
11  + 0.0
12  ERAHL-01
13  ERAHM-01
14  ERAHH-01
15  ERAHO-01
16  + 0.0
17  CA-BAD01
18  CA-RSW01
19  KEY
20  TA-ACT01
21  + 0.0
22  +15.0
23  -15.0
24  + 5.6
25  TA-C307K
26  CA-SAF01
27  CA-ADR-R
28  CA-ADR-S
29  CA-ADR-T
30  CA-ADR-U
31  CA-DATA0
32  CA-DATA1
33  CA-DATA2
34  CA-DATA3
35  CA-DATA4
36  CA-DATA5
37  CA-DATA6
38  CA-DATA7
39  CA-CHS01
---------------------------------------------
```

```
*****************************************************************************************************************
*    WILLI STUDER AG   *    L O C A T I O N     P I N     L I S T            *  89/07/20  *   8:15  *  P A G E  77   *
*****************************************************************************************************************
*                           * TAPE TRANSPORT & AUDIO MCH *                    *  89/04/19 - 00                      *
*****************************************************************************************************************
ASY  3                      AUDIO ELECTRONICS, CH 01 TO 08                                    <--  <--  <--  CONTINUATION

GRP  1        1.820.703.00
             <--  <--  <--  CONTINUATION
=========================================

ELM  6        1.820.715.00
     LINE AMPLIFIER, CH 2                                              J06
-----------------------------------------------------------------------------
PNT SIGNAL NAME  COLOR LV TYPE                                          F
-----------------------------------------------------------------------------
 1  MONIT-02
 2  + 0.0
 3  LOUFA-02
 4  LOUFB-02
 5  + 0.0
 6  INPDI-02
 7  INPAD-02
 8  RECIN-02
 9  + 0.0  /
10  TAPAD-02
11  TAPMS-02
12  TAPDI-02
13  + 0.0
14  LINFA-02
15  LINFB-02
16  CA-EQL02
17  CA-SYN02
18  CA-LSO02
19  KEY
20  TA-ACT02
21  + 0.0
22  +15.0
23  -15.0
24  + 5.6
25  TA-C307K
26  CA-SAF02
27  CA-ADR-R
28  CA-ADR-S
29  CA-ADR-T
30  CA-ADR-U
31  CA-DATA0
32  CA-DATA1
33  CA-DATA2
34  CA-DATA3
35  CA-DATA4
36  CA-DATA5
37  CA-DATA6
38  CA-DATA7
39  CA-CHS02
-----------------------------------------
                                        ./.

GRP  1        1.820.703.00
             <--  <--  <--  CONTINUATION
=========================================

ELM  7        1.820.815.00
     CONTROLLER INTERNAL NRS CH 2                                      J07
-----------------------------------------------------------------------------
PNT SIGNAL NAME  COLOR LV TYPE                                          F
-----------------------------------------------------------------------------
 1A DLBIN-02
 1B + 0.0
 2A + 0.0
 2B DLBGN-02
 3A + 0.0
 3B + 0.0
 4A DLBOA-02
 4B + 0.0
 5A + 0.0
 5B DLBOB-02
 6A + 0.0
 6B + 0.0
 7A CD-ACT02
 7B CD-REP02
 8A CD-REC02
 8B CD-CAL02
 9A + 0.0
 9B + 0.0
10A MONIT-02
10B CA-TC-02
11A INPDI-02
11B INPAD-02
12A RECIN-02
12B
13A + 0.0
13B + 0.0
14A TAPAD-02
14B TAPDI-02
15A +15.0
15B +15.0
16A + 5.6
16B + 5.6
17A + 0.0
17B + 0.0
18A -15.0
18B -15.0
19A TONGEN
19B SGNGND
20A REFLEV
20B + 0.0
21A TA-C307K
21B CA-SAF02
22A TA-CMP02
22B CA-SAF-A
23A + 0.0
23B CA-LSW02
24A CA-LSO02

GRP  1        1.820.703.00
             <--  <--  <--  CONTINUATION
=========================================

ELM  7        1.820.815.00
             <--  <--  <--  CONTINUATION
-----------------------------------------------------------------------------
PNT SIGNAL NAME  COLOR LV TYPE                                          F
-----------------------------------------------------------------------------
24B
25A CA-ADR-R
25B CA-ADR-S
26A CA-ADR-T
26B CA-ADR-U
27A CA-DATA0
27B CA-DATA1
28A CA-DATA2
28B CA-DATA3
29A CA-DATA4
29B CA-DATA5
30A CA-DATA6
30B CA-DATA7
31A + 0.0
31B + 0.0
32A CA-CHS02
32B + 0.0
-----------------------------------------
                                        ./.
```

```
*****************************************************************************************************************
*    WILLI STUDER AG   *    L O C A T I O N     P I N     L I S T            *  89/07/20  *   8:15  *  P A G E  78   *
*****************************************************************************************************************
*                           * TAPE TRANSPORT & AUDIO MCH *                    *  89/04/19 - 00                      *
*****************************************************************************************************************
ASY  3                      AUDIO ELECTRONICS, CH 01 TO 08                                    <--  <--  <--  CONTINUATION

GRP  1        1.820.703.00
             <--  <--  <--  CONTINUATION
=========================================

ELM  8        1.820.710.00
     REPRODUCE AMPLIFIER, CH 2                                         J08
-----------------------------------------------------------------------------
PNT SIGNAL NAME  COLOR LV TYPE                                          F
-----------------------------------------------------------------------------
 1  TAPLI-02
 2  EQUAL-02
 3  SYPRE-02
 4  K-REC-02
 5  + 0.0
 6  REPRE-02
 7  REPRO-02
 8  + 0.0
 9  CA-TC-02
10  TAPDI-02
11  + 0.0
12  SYNHL-02
13  SYNHH-02
14  + 0.0
15  CA-EQL02
16  CA-SYN02
17  CA-LSW02
18  + 0.0
19  KEY
20  TA-ACT02
21  + 0.0
22  +15.0
23  -15.0
24  + 5.6
25  TA-C307K
26  CA-SAF02
27  CA-ADR-R
28  CA-ADR-S
29  CA-ADR-T
30  CA-ADR-U
31  CA-DATA0
32  CA-DATA1
33  CA-DATA2
34  CA-DATA3
35  CA-DATA4
36  CA-DATA5
37  CA-DATA6
38  CA-DATA7
39  CA-CHS02
-----------------------------------------

GRP  1        1.820.703.00
             <--  <--  <--  CONTINUATION
=========================================

ELM  9        1.820.811.00
     RECORD AMPLIFIER, CH 2                                            J09
-----------------------------------------------------------------------------
PNT SIGNAL NAME  COLOR LV TYPE                                          F
-----------------------------------------------------------------------------
 1  RECIN-02
 2  EQUAL-02
 3  BIAFB-02
 4  K-REC-02
 5  + 0.0
 6  BIASA-02
 7  BIASB-02
 8  BIASC-02
 9  RECHL-02
10  RECHH-02
11  + 0.0
12  SYNHL-02
13  SYNHH-02
14  + 0.0
15  AFCSW-02
16  + 0.0
17  CA-BAD02
18  CA-RSW02
19  KEY
20  TA-ACT02
21  + 0.0
22  +15.0
23  -15.0
24  + 5.6
25  TA-C307K
26  CA-SAF02
27  CA-ADR-R
28  CA-ADR-S
29  CA-ADR-T
30  CA-ADR-U
31  CA-DATA0
32  CA-DATA1
33  CA-DATA2
34  CA-DATA3
35  CA-DATA4
36  CA-DATA5
37  CA-DATA6
38  CA-DATA7
39  CA-CHS02
-----------------------------------------

GRP  1        1.820.703.00
             <--  <--  <--  CONTINUATION
=========================================

ELM 10        1.820.813.00
     HF-DRIVER, CH 2                                                   J10
-----------------------------------------------------------------------------
PNT SIGNAL NAME  COLOR LV TYPE                                          F
-----------------------------------------------------------------------------
 1  BIAFB-02
 2  K-REC-02
 3  + 0.0
 4  + 0.0
 5  BIASA-02
 6  BIASB-02
 7  BIASC-02
 8
 9  ERACS-02
10  AFCSW-02
11  + 0.0
12  ERAHL-02
13  ERAHM-02
14  ERAHH-02
15  ERAHO-02
16  + 0.0
17  CA-BAD02
18  CA-RSW02
19  KEY
20  TA-ACT02
21  + 0.0
22  +15.0
23  -15.0
24  + 5.6
25  TA-C307K
26  CA-SAF02
27  CA-ADR-R
28  CA-ADR-S
29  CA-ADR-T
30  CA-ADR-U
31  CA-DATA0
32  CA-DATA1
33  CA-DATA2
34  CA-DATA3
35  CA-DATA4
36  CA-DATA5
37  CA-DATA6
38  CA-DATA7
39  CA-CHS02
-----------------------------------------
```

```
*****************************************************************************************************************************
*   WILLI STUDER AG   *   L O C A T I O N     P I N     L I S T           *  89/07/20  *   8:15  *  P A G E  79   *
*****************************************************************************************************************************
*                              * TAPE TRANSPORT & AUDIO MCH *                *  89/04/19 - 00                            *
*****************************************************************************************************************************
ASY  3                          AUDIO ELECTRONICS, CH 01 TO 08                                    <--  <--  <--  CONTINUATION

GRP  1          1.820.703.00
              <--  <--  <--  CONTINUATION
=======================================

ELM 11          1.820.715.00
    LINE AMPLIFIER, CH 3                    J11
---------------------------------------------
PNT SIGNAL NAME  COLOR LV TYPE            F
---------------------------------------------
 1  MONIT-03
 2  + 0.0
 3  LOUFA-03
 4  LOUFB-03
 5  + 0.0
 6  INPDI-03
 7  INPAD-03
 8  RECIN-03
 9  + 0.0
10  TAPAD-03
11  TAPMS-03
12  TAPDI-03
13  + 0.0
14  LINFA-03
15  LINFB-03
16  CA-EQL03
17  CA-SYN03
18  CA-LSO03
19  KEY
20  TA-ACT03
21  + 0.0
22  +15.0
23  -15.0
24  + 5.6
25  TA-C307K
26  CA-SAF03
27  CA-ADR-R
28  CA-ADR-S
29  CA-ADR-T
30  CA-ADR-U
31  CA-DATA0
32  CA-DATA1
33  CA-DATA2
34  CA-DATA3
35  CA-DATA4
36  CA-DATA5
37  CA-DATA6
38  CA-DATA7
39  CA-CHS03
---------------------------------------------
                                         ./.

GRP  1          1.820.703.00
              <--  <--  <--  CONTINUATION
=======================================

ELM 12          1.820.815.00
    CONTROLLER INTERNAL NRS CH 3            J12
---------------------------------------------
PNT SIGNAL NAME  COLOR LV TYPE            F
---------------------------------------------
 1A DLBIN-03
 1B + 0.0
 2A + 0.0
 2B DLBGN-03
 3A + 0.0
 3B + 0.0
 4A DLBOA-03
 4B + 0.0
 5A + 0.0
 5B DLBOB-03
 6A + 0.0
 6B + 0.0
 7A CD-ACT03
 7B CD-REP03
 8A CD-REC03
 8B CD-CAL03
 9A + 0.0
 9B + 0.0
10A MONIT-03
10B CA-TC-03
11A INPDI-03
11B INPAD-03
12A RECIN-03
12B
13A + 0.0
13B + 0.0
14A TAPAD-03
14B TAPDI-03
15A +15.0
15B +15.0
16A + 5.6
16B + 5.6
17A + 0.0
17B + 0.0
18A -15.0
18B -15.0
19A TONGEN
19B SGNGND
20A REFLEV
20B + 0.0
21A TA-C307K
21B CA-SAF03
22A TA-CMP03
22B CA-SAF-A
23A + 0.0
23B CA-LSW03
24A CA-LSO03

GRP  1          1.820.703.00
              <--  <--  <--  CONTINUATION
=======================================

ELM 12          1.820.815.00
              <--  <--  <--  CONTINUATION
---------------------------------------------
PNT SIGNAL NAME  COLOR LV TYPE            F
---------------------------------------------
24B
25A CA-ADR-R
25B CA-ADR-S
26A CA-ADR-T
26B CA-ADR-U
27A CA-DATA0
27B CA-DATA1
28A CA-DATA2
28B CA-DATA3
29A CA-DATA4
29B CA-DATA5
30A CA-DATA6
30B CA-DATA7
31A + 0.0
31B + 0.0
32A CA-CHS03
32B + 0.0
---------------------------------------------
                                         ./.
```

```
*****************************************************************************************************************************
*   WILLI STUDER AG   *   L O C A T I O N     P I N     L I S T           *  89/07/20  *   8:15  *  P A G E  80   *
*****************************************************************************************************************************
*                              * TAPE TRANSPORT & AUDIO MCH *                *  89/04/19 - 00                            *
*****************************************************************************************************************************
ASY  3                          AUDIO ELECTRONICS, CH 01 TO 08                                    <--  <--  <--  CONTINUATION

GRP  1          1.820.703.00
              <--  <--  <--  CONTINUATION
=======================================

ELM 13          1.820.710.00
    REPRODUCE AMPLIFIER, CH 3               J13
---------------------------------------------
PNT SIGNAL NAME  COLOR LV TYPE            F
---------------------------------------------
 1  TAPLI-03
 2  EQUAL-03
 3  SYPRE-03
 4  K-REC-03
 5  + 0.0
 6  REPRE-03
 7  REPRO-03
 8  + 0.0
 9  CA-TC-03
10  TAPDI-03
11  + 0.0
12  SYNHL-03
13  SYNHH-03
14  + 0.0
15  CA-EQL03
16  CA-SYN03
17  CA-LSW03
18  + 0.0
19  KEY
20  TA-ACT03
21  + 0.0
22  +15.0
23  -15.0
24  + 5.6
25  TA-C307K
26  CA-SAF03
27  CA-ADR-R
28  CA-ADR-S
29  CA-ADR-T
30  CA-ADR-U
31  CA-DATA0
32  CA-DATA1
33  CA-DATA2
34  CA-DATA3
35  CA-DATA4
36  CA-DATA5
37  CA-DATA6
38  CA-DATA7
39  CA-CHS03
---------------------------------------------

GRP  1          1.820.703.00
              <--  <--  <--  CONTINUATION
=======================================

ELM 14          1.820.811.00
    RECORD AMPLIFIER, CH 3                  J14
---------------------------------------------
PNT SIGNAL NAME  COLOR LV TYPE            F
---------------------------------------------
 1  RECIN-03
 2  EQUAL-03
 3  BIAFB-03
 4  K-REC-03
 5  + 0.0
 6  BIASA-03
 7  BIASB-03
 8  BIASC-03
 9  RECHL-03
10  RECHH-03
11  + 0.0
12  SYNHL-03
13  SYNHH-03
14  + 0.0
15  AFCSW-03
16  + 0.0
17  CA-BAD03
18  CA-RSW03
19  KEY
20  TA-ACT03
21  + 0.0
22  +15.0
23  -15.0
24  + 5.6
25  TA-C307K
26  CA-SAF03
27  CA-ADR-R
28  CA-ADR-S
29  CA-ADR-T
30  CA-ADR-U
31  CA-DATA0
32  CA-DATA1
33  CA-DATA2
34  CA-DATA3
35  CA-DATA4
36  CA-DATA5
37  CA-DATA6
38  CA-DATA7
39  CA-CHS03
---------------------------------------------

GRP  1          1.820.703.00
              <--  <--  <--  CONTINUATION
=======================================

ELM 15          1.820.813.00
    HF-DRIVER, CH 3                         J15
---------------------------------------------
PNT SIGNAL NAME  COLOR LV TYPE            F
---------------------------------------------
 1  BIAFB-03
 2  K-REC-03
 3  + 0.0
 4  + 0.0
 5  BIASA-03
 6  BIASB-03
 7  BIASC-03
 8
 9  ERACS-03
10  AFCSW-03
11  + 0.0
12  ERAHL-03
13  ERAHM-03
14  ERAHH-03
15  ERAHO-03
16  + 0.0
17  CA-BAD03
18  CA-RSW03
19  KEY
20  TA-ACT03
21  + 0.0
22  +15.0
23  -15.0
24  + 5.6
25  TA-C307K
26  CA-SAF03
27  CA-ADR-R
28  CA-ADR-S
29  CA-ADR-T
30  CA-ADR-U
31  CA-DATA0
32  CA-DATA1
33  CA-DATA2
34  CA-DATA3
35  CA-DATA4
36  CA-DATA5
37  CA-DATA6
38  CA-DATA7
39  CA-CHS03
---------------------------------------------
```

```
*****************************************************************************************************************************
*    WILLI STUDER AG    *    L O C A T I O N     P I N     L I S T                *  89/07/20  *   8:15  *  P A G E  81   *
*****************************************************************************************************************************
*                              * TAPE TRANSPORT & AUDIO MCH *                     *  89/04/19 - 00                          *
*****************************************************************************************************************************
ASY  3                          AUDIO ELECTRONICS, CH 01 TO 08                                    <--  <--  <--  CONTINUATION

GRP  1          1.820.703.00
                <--  <--  <--  CONTINUATION
=======================================

ELM 16          1.820.715.00
    LINE AMPLIFIER, CH 4                  J16
---------------------------------------
PNT SIGNAL NAME  COLOR LV TYPE          F
---------------------------------------
 1  MONIT-04
 2  + 0.0
 3  LOUFA-04
 4  LOUFB-04
 5  + 0.0
 6  INPDI-04
 7  INPAD-04
 8  RECIN-04
 9  + 0.0
10  TAPAD-04
11  TAPMS-04
12  TAPDI-04
13  + 0.0
14  LINFA-04
15  LINFB-04
16  CA-EQL04
17  CA-SYN04
18  CA-LSO04
19  KEY
20  TA-ACT04
21  + 0.0
22  +15.0
23  -15.0
24  + 5.6
25  TA-C307K
26  CA-SAF04
27  CA-ADR-R
28  CA-ADR-S
29  CA-ADR-T
30  CA-ADR-U
31  CA-DATA0
32  CA-DATA1
33  CA-DATA2
34  CA-DATA3
35  CA-DATA4
36  CA-DATA5
37  CA-DATA6
38  CA-DATA7
39  CA-CHS04
---------------------------------------
                                  ./.

GRP  1          1.820.703.00
                <--  <--  <--  CONTINUATION
=======================================

ELM 17          1.820.815.00
    CONTROLLER INTERNAL NRS CH 4          J17
---------------------------------------
PNT SIGNAL NAME  COLOR LV TYPE          F
---------------------------------------
 1A DLBIN-04
 1B + 0.0
 2A + 0.0
 2B DLBGN-04
 3A + 0.0
 3B + 0.0
 4A DLBOA-04
 4B + 0.0
 5A + 0.0
 5B DLBOB-04
 6A + 0.0
 6B + 0.0
 7A CD-ACT04
 7B CD-REP04
 8A CD-REC04
 8B CD-CAL04
 9A + 0.0
 9B + 0.0
10A MONIT-04
10B CA-TC-04
11A INPDI-04
11B INPAD-04
12A RECIN-04
12B
13A + 0.0
13B + 0.0
14A TAPAD-04
14B TAPDI-04
15A +15.0
15B +15.0
16A + 5.6
16B + 5.6
17A + 0.0
17B + 0.0
18A -15.0
18B -15.0
19A TONGEN
19B SGNGND
20A REFLEV
20B + 0.0
21A TA-C307K
21B CA-SAF04
22A TA-CMP04
22B CA-SAF-A
23A + 0.0
23B CA-LSW04
24A CA-LSO04

GRP  1          1.820.703.00
                <--  <--  <--  CONTINUATION
=======================================

ELM 17          1.820.815.00
                <--  <--  <--  CONTINUATION
---------------------------------------
PNT SIGNAL NAME  COLOR LV TYPE          F
---------------------------------------
24B
25A CA-ADR-R
25B CA-ADR-S
26A CA-ADR-T
26B CA-ADR-U
27A CA-DATA0
27B CA-DATA1
28A CA-DATA2
28B CA-DATA3
29A CA-DATA4
29B CA-DATA5
30A CA-DATA6
30B CA-DATA7
31A + 0.0
31B + 0.0
32A CA-CHS04
32B + 0.0
---------------------------------------
                                  ./.
```

```
*****************************************************************************************************************************
*    WILLI STUDER AG    *    L O C A T I O N     P I N     L I S T                *  89/07/20  *   8:15  *  P A G E  82   *
*****************************************************************************************************************************
*                              * TAPE TRANSPORT & AUDIO MCH *                     *  89/04/19 - 00                          *
*****************************************************************************************************************************
ASY  3                          AUDIO ELECTRONICS, CH 01 TO 08                                    <--  <--  <--  CONTINUATION

GRP  1          1.820.703.00
                <--  <--  <--  CONTINUATION
=======================================

ELM 18          1.820.710.00
    REPRODUCE AMPLIFIER, CH 4             J18
---------------------------------------
PNT SIGNAL NAME  COLOR LV TYPE          F
---------------------------------------
 1  TAPLI-04
 2  EQUAL-04
 3  SYPRE-04
 4  K-REC-04
 5  + 0.0
 6  REPRE-04
 7  REPRO-04
 8  + 0.0
 9  CA-TC-04
10  TAPDI-04
11  + 0.0
12  SYNHL-04
13  SYNHH-04
14  + 0.0
15  CA-EQL04
16  CA-SYN04
17  CA-LSW04
18  + 0.0
19  KEY
20  TA-ACT04
21  + 0.0
22  +15.0
23  -15.0
24  + 5.6
25  TA-C307K
26  CA-SAF04
27  CA-ADR-R
28  CA-ADR-S
29  CA-ADR-T
30  CA-ADR-U
31  CA-DATA0
32  CA-DATA1
33  CA-DATA2
34  CA-DATA3
35  CA-DATA4
36  CA-DATA5
37  CA-DATA6
38  CA-DATA7
39  CA-CHS04
---------------------------------------

GRP  1          1.820.703.00
                <--  <--  <--  CONTINUATION
=======================================

ELM 19          1.820.811.00
    RECORD AMPLIFIER, CH 4                J19
---------------------------------------
PNT SIGNAL NAME  COLOR LV TYPE          F
---------------------------------------
 1  RECIN-04
 2  EQUAL-04
 3  BIAFB-04
 4  K-REC-04
 5  + 0.0
 6  BIASA-04
 7  BIASB-04
 8  BIASC-04
 9  RECHL-04
10  RECHH-04
11  + 0.0
12  SYNHL-04
13  SYNHH-04
14  + 0.0
15  AFCSW-04
16  + 0.0
17  CA-BAD04
18  CA-RSW04
19  KEY
20  TA-ACT04
21  + 0.0
22  +15.0
23  -15.0
24  + 5.6
25  TA-C307K
26  CA-SAF04
27  CA-ADR-R
28  CA-ADR-S
29  CA-ADR-T
30  CA-ADR-U
31  CA-DATA0
32  CA-DATA1
33  CA-DATA2
34  CA-DATA3
35  CA-DATA4
36  CA-DATA5
37  CA-DATA6
38  CA-DATA7
39  CA-CHS04
---------------------------------------

GRP  1          1.820.703.00
                <--  <--  <--  CONTINUATION
=======================================

ELM 20          1.820.813.00
    HF-DRIVER, CH 4                       J20
---------------------------------------
PNT SIGNAL NAME  COLOR LV TYPE          F
---------------------------------------
 1  BIAFB-04
 2  K-REC-04
 3  + 0.0
 4  + 0.0
 5  BIASA-04
 6  BIASB-04
 7  BIASC-04
 8
 9  ERACS-04
10  AFCSW-04
11  + 0.0
12  ERAHL-04
13  ERAHM-04
14  ERAHH-04
15  ERAHO-04
16  + 0.0
17  CA-BAD04
18  CA-RSW04
19  KEY
20  TA-ACT04
21  + 0.0
22  +15.0
23  -15.0
24  + 5.6
25  TA-C307K
26  CA-SAF04
27  CA-ADR-R
28  CA-ADR-S
29  CA-ADR-T
30  CA-ADR-U
31  CA-DATA0
32  CA-DATA1
33  CA-DATA2
34  CA-DATA3
35  CA-DATA4
36  CA-DATA5
37  CA-DATA6
38  CA-DATA7
39  CA-CHS04
---------------------------------------
```

```
*    WILLI STUDER AG   *    L O C A T I O N     P I N     L I S T          * 89/07/20 *   8:15 *   P A G E  83   *
*                           * TAPE TRANSPORT & AUDIO MCH *                  * 89/04/19 - 00                      *
ASY  3                     AUDIO ELECTRONICS, CH 01 TO 08                                  <--  <--  <--  CONTINUATION

GRP  1        1.820.703.00
            <--  <--  <--  CONTINUATION
=======================================

ELM 21        1.820.717.00
    BUS CONVERTER                                  J21
---------------------------------------------------------
PNT SIGNAL NAME  COLOR LV TYPE                      F
---------------------------------------------------------
 1A TA-CLPAB
 1B TA-CLMAB
 2A T-AOP-AB
 2B T-AON-AB
 3A S-A1P-A
 3B S-A1N-AB
 4A T-RWP-AB
 4B T-RWN-AB
 5A T-SL-AB
 5B
 6A T-DT0-AB
 6B T-DT1-AB
 7A T-DT2-AB
 7B T-DT3-AB
 8A T-DT4-AB
 8B T-DT5-AB
 9A T-DT6-AB
 9B T-DT7-AB
10A TA-CMP01
10B TA-CMP02
11A TA-CMP03
11B TA-CMP04
12A TA-ACT01
12B TA-ACT02
13A TA-ACT03
13B TA-ACT04
14A
14B
15A +15.0
15B +15.0
16A + 5.6
16B + 5.6
17A + 0.0
17B + 0.0
18A -15.0
18B -15.0
19A TA-C307K
19B
20A CA-SAF-A
20B
21A CA-ADR-R
21B CA-ADR-S
22A CA-ADR-T
22B CA-ADR-U
23A CA-DATA0
23B CA-DATA1
24A CA-DATA2

GRP  1        1.820.703.00
            <--  <--  <--  CONTINUATION
=======================================

ELM 21        1.820.717.00
            <--  <--  <--  CONTINUATION
---------------------------------------------------------
PNT SIGNAL NAME  COLOR LV TYPE                      F
---------------------------------------------------------
24B CA-DATA3
25A CA-DATA4
25B CA-DATA5
26A CA-DATA6
26B CA-DATA7
27A + 0.0
27B + 0.0
28A CA-CHS01
28B CA-CHS02
29A CA-CHS03
29B CA-CHS04
30A + 0.0
30B + 0.0
31A
31B
32A
32B
---------------------------------------------------------

ELM 31
    LINE INPUT/OUTPUT, CH 1                        J22
---------------------------------------------------------
PNT SIGNAL NAME  COLOR LV TYPE                      F
---------------------------------------------------------
 1  LOUFA-01
 2  LOUFB-01
 3  KEY
 4  + 0.0
 5  LINFA-01
 6  LINFB-01
 7  + 0.0
---------------------------------------------------------
                                                  ./.

GRP  1        1.820.703.00
            <--  <--  <--  CONTINUATION
=======================================

ELM 32
    NOISE REDUCTION, CH 1                          J23
---------------------------------------------------------
PNT SIGNAL NAME  COLOR LV TYPE                      F
---------------------------------------------------------
 1  CD-CAL01
 2  CD-REC01
 3  CD-REP01
 4  CD-ACT01
 5  KEY
 6  + 0.0
 7  DLB0B-01
 8  + 0.0
 9  DLB0A-01
10  + 0.0
11  DLBGN-01
12  + 0.0
13  DLBIN-01
---------------------------------------------------------

ELM 33
    REPRODUCE PREAMPLIFIER, CH 1                   J24
---------------------------------------------------------
PNT SIGNAL NAME  COLOR LV TYPE                      F
---------------------------------------------------------
 1  REPRE-01
 2  REPRO-01
 3  KEY
 4  + 0.0
---------------------------------------------------------

ELM 34
    RECORD HEAD, CH 1                              J25
---------------------------------------------------------
PNT SIGNAL NAME  COLOR LV TYPE                      F
---------------------------------------------------------
 1  RECHL-01
 2  RECHH-01
 3  KEY
 4  + 0.0
---------------------------------------------------------

ELM 35
    ERASE HEAD, CH 1                               J26
---------------------------------------------------------
PNT SIGNAL NAME  COLOR LV TYPE                      F
---------------------------------------------------------
 1  ERAHL-01
 2  ERAHH-01
 3  KEY
 4  ERAHO-01
---------------------------------------------------------
```

```
*    WILLI STUDER AG   *    L O C A T I O N     P I N     L I S T          * 89/07/20 *   8:15 *   P A G E  84   *
*                           * TAPE TRANSPORT & AUDIO MCH *                  * 89/04/19 - 00                      *
ASY  3                     AUDIO ELECTRONICS, CH 01 TO 08                                  <--  <--  <--  CONTINUATION

GRP  1        1.820.703.00
            <--  <--  <--  CONTINUATION
=======================================

ELM 36
    LINE INPUT/OUTPUT, CH 2                        J27
---------------------------------------------------------
PNT SIGNAL NAME  COLOR LV TYPE                      F
---------------------------------------------------------
 1  LOUFA-02
 2  LOUFB-02
 3  KEY
 4  + 0.0
 5  LINFA-02
 6  LINFB-02
 7  + 0.0
---------------------------------------------------------

ELM 37
    NOISE REDUCTION, CH 2                          J28
---------------------------------------------------------
PNT SIGNAL NAME  COLOR LV TYPE                      F
---------------------------------------------------------
 1  CD-CAL02
 2  CD-REC02
 3  CD-REP02
 4  CD-ACT02
 5  KEY
 6  + 0.0
 7  DLB0B-02
 8  + 0.0
 9  DLB0A-02
10  + 0.0
11  DLBGN-02
12  + 0.0
13  DLBIN-02
---------------------------------------------------------

ELM 38
    REPRODUCE PREAMPLIFIER, CH 2                   J29
---------------------------------------------------------
PNT SIGNAL NAME  COLOR LV TYPE                      F
---------------------------------------------------------
 1  REPRE-02
 2  REPRO-02
 3  KEY
 4  + 0.0
---------------------------------------------------------
                                                  ./.

GRP  1        1.820.703.00
            <--  <--  <--  CONTINUATION
=======================================

ELM 39
    RECORD HEAD, CH 2                              J30
---------------------------------------------------------
PNT SIGNAL NAME  COLOR LV TYPE                      F
---------------------------------------------------------
 1  RECHL-02
 2  RECHH-02
 3  KEY
 4  + 0.0
---------------------------------------------------------

ELM 40
    ERASE HEAD, CH 2                               J31
---------------------------------------------------------
PNT SIGNAL NAME  COLOR LV TYPE                      F
---------------------------------------------------------
 1  ERAHL-02
 2  ERAHH-02
 3  KEY
 4  ERAHO-02
---------------------------------------------------------

ELM 41
    LINE INPUT/OUTPUT, CH 3                        J32
---------------------------------------------------------
PNT SIGNAL NAME  COLOR LV TYPE                      F
---------------------------------------------------------
 1  LOUFA-03
 2  LOUFB-03
 3  KEY
 4  + 0.0
 5  LINFA-03
 6  LINFB-03
 7  + 0.0
---------------------------------------------------------
                                                  ./.

GRP  1        1.820.703.00
            <--  <--  <--  CONTINUATION
=======================================

ELM 42
    NOISE REDUCTION, CH 3                          J33
---------------------------------------------------------
PNT SIGNAL NAME  COLOR LV TYPE                      F
---------------------------------------------------------
 1  CD-CAL03
 2  CD-REC03
 3  CD-REP03
 4  CD-ACT03
 5  KEY
 6  + 0.0
 7  DLB0B-03
 8  + 0.0
 9  DLB0A-03
10  + 0.0
11  DLBGN-03
12  + 0.0
13  DLBIN-03
---------------------------------------------------------

ELM 43
    REPRODUCE PREAMPLIFIER, CH 3                   J34
---------------------------------------------------------
PNT SIGNAL NAME  COLOR LV TYPE                      F
---------------------------------------------------------
 1  REPRE-03
 2  REPRO-03
 3  KEY
 4  + 0.0
---------------------------------------------------------

ELM 44
    RECORD HEAD, CH 3                              J35
---------------------------------------------------------
PNT SIGNAL NAME  COLOR LV TYPE                      F
---------------------------------------------------------
 1  RECHL-03
 2  RECHH-03
 3  KEY
 4  + 0.0
---------------------------------------------------------

ELM 45
    ERASE HEAD, CH 3                               J36
---------------------------------------------------------
PNT SIGNAL NAME  COLOR LV TYPE                      F
---------------------------------------------------------
 1  ERAHL-03
 2  ERAHH-03
 3  KEY
 4  ERAHO-03
---------------------------------------------------------
```

```
*****************************************************************************************************************************
*    WILLI STUDER AG   *    L O C A T I O N     P I N     L I S T            *  89/07/20  *   8:15  *  P A G E  85    *
*****************************************************************************************************************************
*                             * TAPE TRANSPORT & AUDIO MCH *                  *  89/04/19 - 00                            *
*****************************************************************************************************************************
ASY  3                        AUDIO ELECTRONICS, CH 01 TO 08                                    <--  <--  <--  CONTINUATION

GRP  1          1.820.703.00
                <--  <--  <--  CONTINUATION
=======================================

ELM 46
    LINE INPUT/OUTPUT, CH 4                                  J37
---------------------------------------
PNT SIGNAL NAME  COLOR LV TYPE            F
---------------------------------------
 1  LOUFA-04
 2  LOUFB-04
 3  KEY
 4  + 0.0
 5  LINFA-04
 6  LINFB-04
 7  + 0.0
---------------------------------------

ELM 47
    NOISE REDUCTION, CH 4                                    J38
---------------------------------------
PNT SIGNAL NAME  COLOR LV TYPE            F
---------------------------------------
 1  CD-CAL04
 2  CD-REC04
 3  CD-REP04
 4  CD-ACT04
 5  KEY
 6  + 0.0
 7  DLBOB-04
 8  + 0.0
 9  DLBOA-04
10  + 0.0
11  DLBGN-04
12  + 0.0
13  DLBIN-04
---------------------------------------

ELM 48
    REPRODUCE PREAMPLIFIER, CH 4                             J39
---------------------------------------
PNT SIGNAL NAME  COLOR LV TYPE            F
---------------------------------------
 1  REPRE-04
 2  REPRO-04
 3  KEY
 4  + 0.0
---------------------------------------

GRP  1          1.820.703.00
                <--  <--  <--  CONTINUATION
=======================================

ELM 49
    RECORD HEAD, CH 4                                        J40
---------------------------------------
PNT SIGNAL NAME  COLOR LV TYPE            F
---------------------------------------
 1  RECHL-04
 2  RECHH-04
 3  KEY
 4  + 0.0
---------------------------------------

ELM 50
    ERASE HEAD, CH 4                                         J41
---------------------------------------
PNT SIGNAL NAME  COLOR LV TYPE            F
---------------------------------------
 1  ERAHL-04
 2  ERAHH-04
 3  KEY
 4  ERAHO-04
---------------------------------------

ELM 60
    JUMPER SWITCH                                            JS01
---------------------------------------
PNT SIGNAL NAME  COLOR LV TYPE            F
---------------------------------------
 1  T-A1P-AB
 2  S-A1P-A
 3  T-A1N-AB
 4  S-A1N-A
 5  T-A1P-AB
---------------------------------------
                                                             ./.

GRP  1          1.820.703.00
                <--  <--  <--  CONTINUATION
=======================================

ELM 70
                                                             P01
---------------------------------------
PNT SIGNAL NAME  COLOR LV TYPE            F
---------------------------------------
 1  + 0.0
 2  + 0.0
 3  + 5.6
 4  + 5.6
 5  +15.0
 6  -15.0
 7  TONGEN
 8  SGNGND
 9  REFLEV
10  + 0.0
11  TA-CLPAB
12  TA-CLMAB
13  + 0.0
14  T-AOP-AB
15  T-AON-AB
16  + 0.0
17  T-A1P-AB
18  T-A1N-AB
19  + 0.0
20  T-RWP-AB
21  T-RWN-AB
22  + 0.0
23  T-SL-AB
24  + 0.0
25  T-DTO-AB
26  + 0.0
27  T-DT1-AB
28  + 0.0
29  T-DT2-AB
30  + 0.0
31  T-DT3-AB
32  + 0.0
33  T-DT4-AB
34  + 0.0
35  T-DT5-AB
36  + 0.0
37  T-DT6-AB
38  + 0.0
39  T-DT7-AB
40  + 0.0
---------------------------------------

*****************************************************************************************************************************
*    WILLI STUDER AG   *    L O C A T I O N     P I N     L I S T            *  89/07/20  *   8:15  *  P A G E  86    *
*****************************************************************************************************************************
*                             * TAPE TRANSPORT & AUDIO MCH *                  *  89/04/19 - 00                            *
*****************************************************************************************************************************
ASY  3                        AUDIO ELECTRONICS, CH 01 TO 08                                    <--  <--  <--  CONTINUATION

GRP  2          1.820.703.00
    BASISBOARD, CH 05 TO 08
=======================================

ELM  1          1.820.715.00
    LINE AMPLIFIER, CH 5                                     J01
---------------------------------------
PNT SIGNAL NAME  COLOR LV TYPE            F
---------------------------------------
 1  MONIT-05
 2  + 0.0
 3  LOUFA-05
 4  LOUFB-05
 5  + 0.0
 6  INPDI-05
 7  INPAD-05
 8  RECIN-05
 9  + 0.0
10  TAPAD-05
11  TAPMS-05
12  TAPDI-05
13  + 0.0
14  LINFA-05
15  LINFB-05
16  CA-EQL05
17  CA-SYN05
18  CA-LSO05
19  KEY
20  TA-ACT05
21  + 0.0
22  +15.0
23  -15.0
24  + 5.6
25  TA-C307K
26  CA-SAF05
27  CA-ADR-R
28  CA-ADR-S
29  CA-ADR-T
30  CA-ADR-U
31  CA-DATA0
32  CA-DATA1
33  CA-DATA2
34  CA-DATA3
35  CA-DATA4
36  CA-DATA5
37  CA-DATA6
38  CA-DATA7
39  CA-CHS05
---------------------------------------
                                                             ./.

GRP  2          1.820.703.00
                <--  <--  <--  CONTINUATION
=======================================

ELM  2          1.820.815.00
    CONTROLLER INTERNAL NRS CH 5                             J02
---------------------------------------
PNT SIGNAL NAME  COLOR LV TYPE            F
---------------------------------------
 1A DLBIN-05
 1B + 0.0
 2A + 0.0
 2B DLBGN-05
 3A + 0.0
 3B + 0.0
 4A DLBOA-05
 4B + 0.0
 5A + 0.0
 5B DLBOB-05
 6A + 0.0
 6B + 0.0
 7A CD-ACT05
 7B CD-REP05
 8A CD-REC05
 8B CD-CAL05
 9A + 0.0
 9B + 0.0
10A MONIT-05
10B CA-TC-05
11A INPDI-05
11B INPAD-05
12A RECIN-05
12B
13A + 0.0
13B + 0.0
14A TAPAD-05
14B TAPDI-05
15A +15.0
15B +15.0
16A + 5.6
16B + 5.6
17A + 0.0
17B + 0.0
18A -15.0
18B -15.0
19A TONGEN
19B SGNGND
20A REFLEV
20B + 0.0
21A TA-C307K
21B CA-SAF05
22A TA-CMP05
22B CA-SAF-B
23A + 0.0
23B CA-LSW05
24A CA-LSO05

GRP  2          1.820.703.00
                <--  <--  <--  CONTINUATION
=======================================

ELM  2          1.820.815.00
                <--  <--  <--  CONTINUATION
---------------------------------------
PNT SIGNAL NAME  COLOR LV TYPE            F
---------------------------------------
24B
25A CA-ADR-R
25B CA-ADR-S
26A CA-ADR-T
26B CA-ADR-U
27A CA-DATA0
27B CA-DATA1
28A CA-DATA2
28B CA-DATA3
29A CA-DATA4
29B CA-DATA5
30A CA-DATA6
30B CA-DATA7
31A + 0.0
31B + 0.0
32A CA-CHS05
32B + 0.0
---------------------------------------
                                                             ./.
```

```
*****************************************************************************************************************************
*    WILLI STUDER AG    *    L O C A T I O N     P I N     L I S T            * 89/07/20 *   8:15 *  P A G E  87   *
*****************************************************************************************************************************
*                              * TAPE TRANSPORT & AUDIO MCH *                  * 89/04/19 - 00                          *
*****************************************************************************************************************************
ASY  3                         AUDIO ELECTRONICS, CH 01 TO 08                                    <--  <--  <--  CONTINUATION

GRP  2          1.820.703.00
                <--  <--  <--  CONTINUATION
=========================================

ELM  3          1.820.710.00
     REPRODUCE AMPLIFIER, CH 5                                                J03
-----------------------------------------------------------------------------
PNT SIGNAL NAME  COLOR LV TYPE                                                F
-----------------------------------------------------------------------------
 1  TAPLI-05
 2  EQUAL-05
 3  SYPRE-05
 4  K-REC-05
 5  + 0.0
 6  REPRE-05
 7  REPRO-05
 8  + 0.0
 9  CA-TC-05
10  TAPDI-05
11  + 0.0
12  SYNHL-05
13  SYNHH-05
14  + 0.0
15  CA-EQL05
16  CA-SYN05
17  CA-LSW05
18  + 0.0
19  KEY
20  TA-ACT05
21  + 0.0
22  +15.0
23  -15.0
24  + 5.6
25  TA-C307K
26  CA-SAF05
27  CA-ADR-R
28  CA-ADR-S
29  CA-ADR-T
30  CA-ADR-U
31  CA-DATA0
32  CA-DATA1
33  CA-DATA2
34  CA-DATA3
35  CA-DATA4
36  CA-DATA5
37  CA-DATA6
38  CA-DATA7
39  CA-CHS05
-----------------------------------------------------------------------------

GRP  2          1.820.703.00
                <--  <--  <--  CONTINUATION
=========================================

ELM  4          1.820.811.00
     RECORD AMPLIFIER, CH 5                                                   J04
-----------------------------------------------------------------------------
PNT SIGNAL NAME  COLOR LV TYPE                                                F
-----------------------------------------------------------------------------
 1  RECIN-05
 2  EQUAL-05
 3  BIAFB-05
 4  K-REC-05
 5  + 0.0
 6  BIASA-05
 7  BIASB-05
 8  BIASC-05
 9  RECHL-05
10  RECHH-05
11  + 0.0
12  SYNHL-05
13  SYNHH-05
14  + 0.0
15  AFCSW-05
16  + 0.0
17  CA-BAD05
18  CA-RSW05
19  KEY
20  TA-ACT05
21  + 0.0
22  +15.0
23  -15.0
24  + 5.6
25  TA-C307K
26  CA-SAF05
27  CA-ADR-R
28  CA-ADR-S
29  CA-ADR-T
30  CA-ADR-U
31  CA-DATA0
32  CA-DATA1
33  CA-DATA2
34  CA-DATA3
35  CA-DATA4
36  CA-DATA5
37  CA-DATA6
38  CA-DATA7
39  CA-CHS05
-----------------------------------------------------------------------------

GRP  2          1.820.703.00
                <--  <--  <--  CONTINUATION
=========================================

ELM  5          1.820.813.00
     HF-DRIVER, CH 5                                                          J05
-----------------------------------------------------------------------------
PNT SIGNAL NAME  COLOR LV TYPE                                                F
-----------------------------------------------------------------------------
 1  BIAFB-05
 2  K-REC-05
 3  + 0.0
 4  + 0.0
 5  BIASA-05
 6  BIASB-05
 7  BIASC-05
 8
 9  ERACS-05
10  AFCSW-05
11  + 0.0
12  ERAHL-05
13  ERAHM-05
14  ERAHH-05
15  ERAHO-05
16  + 0.0
17  CA-BAD05
18  CA-RSW05
19  KEY
20  TA-ACT05
21  + 0.0
22  +15.0
23  -15.0
24  + 5.6
25  TA-C307K
26  CA-SAF05
27  CA-ADR-R
28  CA-ADR-S
29  CA-ADR-T
30  CA-ADR-U
31  CA-DATA0
32  CA-DATA1
33  CA-DATA2
34  CA-DATA3
35  CA-DATA4
36  CA-DATA5
37  CA-DATA6
38  CA-DATA7
39  CA-CHS05
-----------------------------------------------------------------------------
```

```
*****************************************************************************************************************************
*    WILLI STUDER AG    *    L O C A T I O N     P I N     L I S T            * 89/07/20 *   8:15 *  P A G E  88   *
*****************************************************************************************************************************
*                              * TAPE TRANSPORT & AUDIO MCH *                  * 89/04/19 - 00                          *
*****************************************************************************************************************************
ASY  3                         AUDIO ELECTRONICS, CH 01 TO 08                                    <--  <--  <--  CONTINUATION

GRP  2          1.820.703.00
                <--  <--  <--  CONTINUATION
=========================================

ELM  6          1.820.715.00
     LINE AMPLIFIER, CH 6                                                     J06
-----------------------------------------------------------------------------
PNT SIGNAL NAME  COLOR LV TYPE                                                F
-----------------------------------------------------------------------------
 1  MONIT-06
 2  + 0.0
 3  LOUFA-06
 4  LOUFB-06
 5  + 0.0
 6  INPDI-06
 7  INPAD-06
 8  RECIN-06
 9  + 0.0
10  TAPAD-06
11  TAPMS-06
12  TAPDI-06
13  + 0.0
14  LINFA-06
15  LINFB-06
16  CA-EQL06
17  CA-SYN06
18  CA-LSO06
19  KEY
20  TA-ACT06
21  + 0.0
22  +15.0
23  -15.0
24  + 5.6
25  TA-C307K
26  CA-SAF06
27  CA-ADR-R
28  CA-ADR-S
29  CA-ADR-T
30  CA-ADR-U
31  CA-DATA0
32  CA-DATA1
33  CA-DATA2
34  CA-DATA3
35  CA-DATA4
36  CA-DATA5
37  CA-DATA6
38  CA-DATA7
39  CA-CHS06
-----------------------------------------------------------------------------
                                                                          ./.

GRP  2          1.820.703.00
                <--  <--  <--  CONTINUATION
=========================================

ELM  7          1.820.815.00
     CONTROLLER INTERNAL NRS CH 6                                             J07
-----------------------------------------------------------------------------
PNT SIGNAL NAME  COLOR LV TYPE                                                F
-----------------------------------------------------------------------------
 1A DLBIN-06
 1B + 0.0
 2A + 0.0
 2B DLBGN-06
 3A + 0.0
 3B + 0.0
 4A DLBOA-06
 4B + 0.0
 5A + 0.0
 5B DLBOB-06
 6A + 0.0
 6B + 0.0
 7A CD-ACT06
 7B CD-REP06
 8A CD-REC06
 8B CD-CAL06
 9A + 0.0
 9B + 0.0
10A MONIT-06
10B CA-TC-06
11A INPDI-06
11B INPAD-06
12A RECIN-06
12B
13A + 0.0
13B + 0.0
14A TAPAD-06
14B TAPDI-06
15A +15.0
15B +15.0
16A + 5.6
16B + 5.6
17A + 0.0
17B + 0.0
18A -15.0
18B -15.0
19A TONGEN
19B SGNGND
20A REFLEV
20B + 0.0
21A TA-C307K
21B CA-SAF06
22A TA-CMP06
22B CA-SAF-B
23A + 0.0
23B CA-LSW06
24A CA-LSO06

GRP  2          1.820.703.00
                <--  <--  <--  CONTINUATION
=========================================

ELM  7          1.820.815.00
                <--  <--  <--  CONTINUATION
-----------------------------------------------------------------------------
PNT SIGNAL NAME  COLOR LV TYPE                                                F
-----------------------------------------------------------------------------
24B
25A CA-ADR-R
25B CA-ADR-S
26A CA-ADR-T
26B CA-ADR-U
27A CA-DATA0
27B CA-DATA1
28A CA-DATA2
28B CA-DATA3
29A CA-DATA4
29B CA-DATA5
30A CA-DATA6
30B CA-DATA7
31A + 0.0
31B + 0.0
32A CA-CHS06
32B + 0.0
-----------------------------------------------------------------------------
                                                                          ./.
```

```
*****************************************************************************************************************************
*   WILLI STUDER AG   *   L O C A T I O N   P I N   L I S T                 * 89/07/20  *  8:15  *  P A G E  89   *
*****************************************************************************************************************************
*                          * TAPE TRANSPORT & AUDIO MCH *                    * 89/04/19 - 00                          *
*****************************************************************************************************************************
ASY  3                        AUDIO ELECTRONICS, CH 01 TO 08                                  <--  <--  <--  CONTINUATION

GRP  2        1.820.703.00
              <--  <--  <--  CONTINUATION
==========================

ELM  8        1.820.710.00
    REPRODUCE AMPLIFIER, CH 6          J08
-------------------------------------------
PNT SIGNAL NAME  COLOR LV TYPE          F
-------------------------------------------
 1  TAPLI-06
 2  EQUAL-06
 3  SYPRE-06
 4  K-REC-06
 5  + 0.0
 6  REPRE-06
 7  REPRO-06
 8  + 0.0
 9  CA-TC-06
10  TAPDI-06
11  + 0.0
12  SYNHL-06
13  SYNHH-06
14  + 0.0
15  CA-EQL06
16  CA-SYN06
17  CA-LSW06
18  + 0.0
19  KEY
20  TA-ACT06
21  + 0.0
22  +15.0
23  -15.0
24  + 5.6
25  TA-C307K
26  CA-SAF06
27  CA-ADR-R
28  CA-ADR-S
29  CA-ADR-T
30  CA-ADR-U
31  CA-DATA0
32  CA-DATA1
33  CA-DATA2
34  CA-DATA3
35  CA-DATA4
36  CA-DATA5
37  CA-DATA6
38  CA-DATA7
39  CA-CHS06
-------------------------------------------

GRP  2        1.820.703.00
              <--  <--  <--  CONTINUATION
==========================

ELM  9        1.820.811.00
    RECORD AMPLIFIER, CH 6             J09
-------------------------------------------
PNT SIGNAL NAME  COLOR LV TYPE          F
-------------------------------------------
 1  RECIN-06
 2  EQUAL-06
 3  BIAFB-06
 4  K-REC-06
 5  + 0.0
 6  BIASA-06
 7  BIASB-06
 8  BIASC-06
 9  RECHL-06
10  RECHH-06
11  + 0.0
12  SYNHL-06
13  SYNHH-06
14  + 0.0
15  AFCSW-06
16  + 0.0
17  CA-BAD06
18  CA-RSW06
19  KEY
20  TA-ACT06
21  + 0.0
22  +15.0
23  -15.0
24  + 5.6
25  TA-C307K
26  CA-SAF06
27  CA-ADR-R
28  CA-ADR-S
29  CA-ADR-T
30  CA-ADR-U
31  CA-DATA0
32  CA-DATA1
33  CA-DATA2
34  CA-DATA3
35  CA-DATA4
36  CA-DATA5
37  CA-DATA6
38  CA-DATA7
39  CA-CHS06
-------------------------------------------

GRP  2        1.820.703.00
              <--  <--  <--  CONTINUATION
==========================

ELM 10        1.820.813.00
    HF-DRIVER, CH 6                    J10
-------------------------------------------
PNT SIGNAL NAME  COLOR LV TYPE          F
-------------------------------------------
 1  BIAFB-06
 2  K-REC-06
 3  + 0.0
 4  + 0.0
 5  BIASA-06
 6  BIASB-06
 7  BIASC-06
 8
 9  ERACS-06
10  AFCSW-06
11  + 0.0
12  ERAHL-06
13  ERAHM-06
14  ERAHH-06
15  ERAHO-06
16  + 0.0
17  CA-BAD06
18  CA-RSW06
19  KEY
20  TA-ACT06
21  + 0.0
22  +15.0
23  -15.0
24  + 5.6
25  TA-C307K
26  CA-SAF06
27  CA-ADR-R
28  CA-ADR-S
29  CA-ADR-T
30  CA-ADR-U
31  CA-DATA0
32  CA-DATA1
33  CA-DATA2
34  CA-DATA3
35  CA-DATA4
36  CA-DATA5
37  CA-DATA6
38  CA-DATA7
39  CA-CHS06
-------------------------------------------
```

```
*****************************************************************************************************************************
*   WILLI STUDER AG   *   L O C A T I O N   P I N   L I S T                 * 89/07/20  *  8:15  *  P A G E  90   *
*****************************************************************************************************************************
*                          * TAPE TRANSPORT & AUDIO MCH *                    * 89/04/19 - 00                          *
*****************************************************************************************************************************
ASY  3                        AUDIO ELECTRONICS, CH 01 TO 08                                  <--  <--  <--  CONTINUATION

GRP  2        1.820.703.00
              <--  <--  <--  CONTINUATION
==========================

ELM 11        1.820.715.00
    LINE AMPLIFIER, CH 7               J11
-------------------------------------------
PNT SIGNAL NAME  COLOR LV TYPE          F
-------------------------------------------
 1  MONIT-07
 2  + 0.0
 3  LOUFA-07
 4  LOUFB-07
 5  + 0.0
 6  INPDI-07
 7  INPAD-07
 8  RECIN-07
 9  + 0.0
10  TAPAD-07
11  TAPMS-07
12  TAPDI-07
13  + 0.0
14  LINFA-07
15  LINFB-07
16  CA-EQL07
17  CA-SYN07
18  CA-LSG07
19  KEY
20  TA-ACT07
21  + 0.0
22  +15.0
23  -15.0
24  + 5.6
25  TA-C307K
26  CA-SAF07
27  CA-ADR-R
28  CA-ADR-S
29  CA-ADR-T
30  CA-ADR-U
31  CA-DATA0
32  CA-DATA1
33  CA-DATA2
34  CA-DATA3
35  CA-DATA4
36  CA-DATA5
37  CA-DATA6
38  CA-DATA7
39  CA-CHS07
-------------------------------------------
                                      ./.

GRP  2        1.820.703.00
              <--  <--  <--  CONTINUATION
==========================

ELM 12        1.820.815.00
    CONTROLLER INTERNAL NRS CH 7       J12
-------------------------------------------
PNT SIGNAL NAME  CCLOR LV TYPE          F
-------------------------------------------
 1A DLBIN-07
 1B + 0.0
 2A + 0.0
 2B DLBGN-07
 3A + 0.0
 3B + 0.0
 4A DLBOA-07
 4B + 0.0
 5A + 0.0
 5B DLBGB-07
 6A + 0.0
 6B + 0.0
 7A CD-ACT07
 7B CD-REP07
 8A CD-REC07
 8B CD-CAL07
 9A + 0.0
 9B + 0.0
10A MONIT-07
10B CA-TC-07
11A INPDI-07
11B INPAD-07
12A RECIN-07
12B
13A + 0.0
13B + 0.0
14A TAPAD-07
14B TAPDI-07
15A +15.0
15B +15.0
16A + 5.6
16B + 5.6
17A + 0.0
17B + 0.0
18A -15.0
18B -15.0
19A TONGEN
19B SGNGND
20A REFLEV
20B + 0.0
21A TA-C307K
21B CA-SAF07
22A TA-CMP07
22B CA-SAF-B
23A + 0.0
23B CA-LSW07
24A CA-LSG07

GRP  2        1.820.703.00
              <--  <--  <--  CONTINUATION
==========================

ELM 12        1.820.815.00
              <--  <--  <--  CONTINUATION
-------------------------------------------
PNT SIGNAL NAME  COLOR LV TYPE          F
-------------------------------------------
24B
25A CA-ADR-R
25B CA-ADR-S
26A CA-ADR-T
26B CA-ADR-U
27A CA-DATA0
27B CA-DATA1
28A CA-DATA2
28B CA-DATA3
29A CA-DATA4
29B CA-DATA5
30A CA-DATA6
30B CA-DATA7
31A + 0.0
31B + 0.0
32A CA-CHS07
32B + 0.0
-------------------------------------------
                                      ./.
```

```
*    WILLI STUDER AG    *    L O C A T I O N     P I N     L I S T            * 89/07/20  *   8:15 *   P A G E  91   *
*                                * TAPE TRANSPORT & AUDIO MCH *                * 89/04/19 - 00                        *
ASY  3                        AUDIO ELECTRONICS, CH 01 TO 08                                    <--  <--  <--  CONTINUATION

GRP  2          1.820.703.00
                <--  <--  <--  CONTINUATION
=======================================

ELM 13          1.820.710.00
    REPRODUCE AMPLIFIER, CH 7                                  J13
---------------------------------------------------------------------
PNT SIGNAL NAME  COLOR LV TYPE                                   F
---------------------------------------------------------------------
 1  TAPLI-07
 2  EQUAL-07
 3  SYPRE-07
 4  K-REC-07
 5  + 0.0
 6  REPRE-07
 7  REPRO-07
 8  + 0.0
 9  CA-TC-07
10  TAPDI-07
11  + 0.0
12  SYNHL-07
13  SYNHH-07
14  + 0.0
15  CA-EQL07
16  CA-SYN07
17  CA-LSW07
18  + 0.0
19  KEY
20  TA-ACT07
21  + 0.0
22  +15.0
23  -15.0
24  + 5.6
25  TA-C307K
26  CA-SAF07
27  CA-ADR-R
28  CA-ADR-S
29  CA-ADR-T
30  CA-ADR-U
31  CA-DATA0
32  CA-DATA1
33  CA-DATA2
34  CA-DATA3
35  CA-DATA4
36  CA-DATA5
37  CA-DATA6
38  CA-DATA7
39  CA-CHS07
---------------------------------------------------------------------

GRP  2          1.820.703.00
                <--  <--  <--  CONTINUATION
=======================================

ELM 14          1.820.811.00
    RECORD AMPLIFIER, CH 7                                     J14
---------------------------------------------------------------------
PNT SIGNAL NAME  COLOR LV TYPE                                   F
---------------------------------------------------------------------
 1  RECIN-07
 2  EQUAL-07
 3  BIAFB-07
 4  K-REC-07
 5  + 0.0
 6  BIASA-07
 7  BIASB-07
 8  BIASC-07
 9  RECHL-07
10  RECHH-07
11  + 0.0
12  SYNHL-07
13  SYNHH-07
14  + 0.0
15  AFCSW-07
16  + 0.0
17  CA-BAD07
18  CA-RSW07
19  KEY
20  TA-ACT07
21  + 0.0
22  +15.0
23  -15.0
24  + 5.6
25  TA-C307K
26  CA-SAF07
27  CA-ADR-R
28  CA-ADR-S
29  CA-ADR-T
30  CA-ADR-U
31  CA-DATA0
32  CA-DATA1
33  CA-DATA2
34  CA-DATA3
35  CA-DATA4
36  CA-DATA5
37  CA-DATA6
38  CA-DATA7
39  CA-CHS07
---------------------------------------------------------------------

GRP  2          1.820.703.00
                <--  <--  <--  CONTINUATION
=======================================

ELM 15          1.820.813.00
    HF-DRIVER, CH 7                                            J15
---------------------------------------------------------------------
PNT SIGNAL NAME  COLOR LV TYPE                                   F
---------------------------------------------------------------------
 1  BIAFB-07
 2  K-REC-07
 3  + 0.0
 4  + 0.0
 5  BIASA-07
 6  BIASB-07
 7  BIASC-07
 8
 9  ERACS-07
10  AFCSW-07
11  + 0.0
12  ERAHL-07
13  ERAHM-07
14  ERAHH-07
15  ERAHO-07
16  + 0.0
17  CA-BAD07
18  CA-RSW07
19  KEY
20  TA-ACT07
21  + 0.0
22  +15.0
23  -15.0
24  + 5.6
25  TA-C307K
26  CA-SAF07
27  CA-ADR-R
28  CA-ADR-S
29  CA-ADR-T
30  CA-ADR-U
31  CA-DATA0
32  CA-DATA1
33  CA-DATA2
34  CA-DATA3
35  CA-DATA4
36  CA-DATA5
37  CA-DATA6
38  CA-DATA7
39  CA-CHS07
---------------------------------------------------------------------
```

```
*    WILLI STUDER AG    *    L O C A T I O N     P I N     L I S T            * 89/07/20  *   8:15 *   P A G E  92   *
*                                * TAPE TRANSPORT & AUDIO MCH *                * 89/04/19 - 00                        *
ASY  3                        AUDIO ELECTRONICS, CH 01 TO 08                                    <--  <--  <--  CONTINUATION

GRP  2          1.820.703.00
                <--  <--  <--  CONTINUATION
=======================================

ELM 16          1.820.715.00
    LINE AMPLIFIER, CH 8                                       J16
---------------------------------------------------------------------
PNT SIGNAL NAME  COLOR LV TYPE                                   F
---------------------------------------------------------------------
 1  MONIT-08
 2  + 0.0
 3  LOUFA-08
 4  LOUFB-08
 5  + 0.0
 6  INPDI-08
 7  INPAD-08
 8  RECIN-08
 9  + 0.0
10  TAPAD-08
11  TAPMS-08
12  TAPDI-08
13  + 0.0
14  LINFA-08
15  LINFB-08
16  CA-EQL08
17  CA-SYN08
18  CA-LSO08
19  KEY
20  TA-ACT08
21  + 0.0
22  +15.0
23  -15.0
24  + 5.6
25  TA-C307K
26  CA-SAF08
27  CA-ADR-R
28  CA-ADR-S
29  CA-ADR-T
30  CA-ADR-U
31  CA-DATA0
32  CA-DATA1
33  CA-DATA2
34  CA-DATA3
35  CA-DATA4
36  CA-DATA5
37  CA-DATA6
38  CA-DATA7
39  CA-CHS08
---------------------------------------------------------------------
                                                               ./.

GRP  2          1.820.703.00
                <--  <--  <--  CONTINUATION
=======================================

ELM 17          1.820.815.00
    CONTROLLER INTERNAL NRS CH 8                               J17
---------------------------------------------------------------------
PNT SIGNAL NAME  COLOR LV TYPE                                   F
---------------------------------------------------------------------
 1A DLBIN-08
 1B + 0.0
 2A + 0.0
 2B DLBGN-08
 3A + 0.0
 3B + 0.0
 4A DLBOA-08
 4B + 0.0
 5A + 0.0
 5B DLBOB-08
 6A + 0.0
 6B + 0.0
 7A CD-ACT08
 7B CD-REP08
 8A CD-REC08
 8B CD-CAL08
 9A + 0.0
 9B + 0.0
10A MONIT-08
10B CA-TC-08
11A INPDI-08
11B INPAD-08
12A RECIN-08
12B
13A + 0.0
13B + 0.0
14A TAPAD-08
14B TAPDI-08
15A +15.0
15B +15.0
16A + 5.6
16B + 5.6
17A + 0.0
17B + 0.0
18A -15.0
18B -15.0
19A TONGEN
19B SGNGND
20A REFLEV
20B + 0.0
21A TA-C307K
21B CA-SAF08
22A TA-CMP08
22B CA-SAF-B
23A + 0.0
23B CA-LSW08
24A CA-LSO08

GRP  2          1.820.703.00
                <--  <--  <--  CONTINUATION
=======================================

ELM 17          1.820.815.00
                <--  <--  <--  CONTINUATION
---------------------------------------------------------------------
PNT SIGNAL NAME  COLOR LV TYPE                                   F
---------------------------------------------------------------------
24B
25A CA-ADR-R
25B CA-ADR-S
26A CA-ADR-T
26B CA-ADR-U
27A CA-DATA0
27B CA-DATA1
28A CA-DATA2
28B CA-DATA3
29A CA-DATA4
29B CA-DATA5
30A CA-DATA6
30B CA-DATA7
31A + 0.0
31B + 0.0
32A CA-CHS08
32B + 0.0
---------------------------------------------------------------------
                                                               ./.
```

```
*****************************************************************************************************************************
*    WILLI STUDER AG    *    L O C A T I O N     P I N     L I S T          * 89/07/20  *   8:15  *   P A G E  93    *
*****************************************************************************************************************************
*                              * TAPE TRANSPORT & AUDIO MCH *                * 89/04/19 - 00                              *
*****************************************************************************************************************************
ASY  3                          AUDIO ELECTRONICS, CH 01 TO 08                                  <--  <--  <--  CONTINUATION

GRP  2          1.820.703.00
                <--  <--  <--  CONTINUATION
=======================================

ELM 18          1.820.710.00
    REPRODUCE AMPLIFIER, CH 8                 J18
---------------------------------------------------
PNT SIGNAL NAME  COLOR LV TYPE                 F
---------------------------------------------------
 1  TAPLI-08
 2  EQUAL-08
 3  SYPRE-08
 4  K-REC-08
 5  + 0.0
 6  REPRE-08
 7  REPRO-08
 8  + 0.0
 9  CA-TC-08
10  TAPDI-08
11  + 0.0
12  SYNHL-08
13  SYNHH-08
14  + 0.0
15  CA-EQL08
16  CA-SYN08
17  CA-LSW08
18  + 0.0
19  KEY
20  TA-ACT08
21  + 0.0
22  +15.0
23  -15.0
24  + 5.6
25  TA-C307K
26  CA-SAF08
27  CA-ADR-R
28  CA-ADR-S
29  CA-ADR-T
30  CA-ADR-U
31  CA-DATA0
32  CA-DATA1
33  CA-DATA2
34  CA-DATA3
35  CA-DATA4
36  CA-DATA5
37  CA-DATA6
38  CA-DATA7
39  CA-CHS08
---------------------------------------------------
                                              ./.

GRP  2          1.820.703.00
                <--  <--  <--  CONTINUATION
=======================================

ELM 19          1.820.811.00
    RECORD AMPLIFIER, CH 8                    J19
---------------------------------------------------
PNT SIGNAL NAME  COLOR LV TYPE                 F
---------------------------------------------------
 1  RECIN-08
 2  EQUAL-08
 3  BIAFB-08
 4  K-REC-08
 5  + 0.0
 6  BIASA-08
 7  BIASB-08
 8  BIASC-08
 9  RECHL-08
10  RECHH-08
11  + 0.0
12  SYNHL-08
13  SYNHH-08
14  + 0.0
15  AFCSW-08
16  + 0.0
17  CA-BAD08
18  CA-RSW08
19  KEY
20  TA-ACT08
21  + 0.0
22  +15.0
23  -15.0
24  + 5.6
25  TA-C307K
26  CA-SAF08
27  CA-ADR-R
28  CA-ADR-S
29  CA-ADR-T
30  CA-ADR-U
31  CA-DATA0
32  CA-DATA1
33  CA-DATA2
34  CA-DATA3
35  CA-DATA4
36  CA-DATA5
37  CA-DATA6
38  CA-DATA7
39  CA-CHS08
---------------------------------------------------
                                              ./.

GRP  2          1.820.703.00
                <--  <--  <--  CONTINUATION
=======================================

ELM 20          1.820.813.00
    HF-DRIVER, CH 8                           J20
---------------------------------------------------
PNT SIGNAL NAME  COLOR LV TYPE                 F
---------------------------------------------------
 1  BIAFB-08
 2  K-REC-08
 3  + 0.0
 4  + 0.0
 5  BIASA-08
 6  BIASB-08
 7  BIASC-08
 8
 9  ERACS-08
10  AFCSW-08
11  + 0.0
12  ERAHL-08
13  ERAHM-08
14  ERAHH-08
15  ERAHO-08
16  + 0.0
17  CA-BAD08
18  CA-RSW08
19  KEY
20  TA-ACT08
21  + 0.0
22  +15.0
23  -15.0
24  + 5.6
25  TA-C307K
26  CA-SAF08
27  CA-ADR-R
28  CA-ADR-S
29  CA-ADR-T
30  CA-ADR-U
31  CA-DATA0
32  CA-DATA1
33  CA-DATA2
34  CA-DATA3
35  CA-DATA4
36  CA-DATA5
37  CA-DATA6
38  CA-DATA7
39  CA-CHS08
---------------------------------------------------
                                              ./.
```

```
*****************************************************************************************************************************
*    WILLI STUDER AG    *    L O C A T I O N     P I N     L I S T          * 89/07/20  *   8:15  *   P A G E  94    *
*****************************************************************************************************************************
*                              * TAPE TRANSPORT & AUDIO MCH *                * 89/04/19 - 00                              *
*****************************************************************************************************************************
ASY  3                          AUDIO ELECTRONICS, CH 01 TO 08                                  <--  <--  <--  CONTINUATION

GRP  2          1.820.703.00
                <--  <--  <--  CONTINUATION
=======================================

ELM 21          1.820.717.00
    BUS CONVERTER                             J21
---------------------------------------------------
PNT SIGNAL NAME  COLOR LV TYPE                 F
---------------------------------------------------
 1A TA-CLPAB
 1B TA-CLMAB
 2A T-AOP-AB
 2B T-AON-AB
 3A S-A1P-B
 3B S-A1N-AB
 4A T-RWP-AB
 4B T-RWN-AB
 5A T-SL-AB
 5B
 6A T-DT0-AB
 6B T-DT1-AB
 7A T-DT2-AB
 7B T-DT3-AB
 8A T-DT4-AB
 8B T-DT5-AB
 9A T-DT6-AB
 9B T-DT7-AB
10A TA-CMP05
10B TA-CMP06
11A TA-CMP07
11B TA-CMP08
12A TA-ACT05
12B TA-ACT06
13A TA-ACT07
13B TA-ACT08
14A
14B
15A +15.0
15B +15.0
16A + 5.6
16B + 5.6
17A + 0.0
17B + 0.0
18A -15.0
18B -15.0
19A TA-C307K
19B
20A CA-SAF-B
20B
21A CA-ADR-R
21B CA-ADR-S
22A CA-ADR-T
22B CA-ADR-U
23A CA-DATA0
23B CA-DATA1
24A CA-DATA2

GRP  2          1.820.703.00
                <--  <--  <--  CONTINUATION
=======================================

ELM 21          1.820.717.00
                <--  <--  <--  CONTINUATION
---------------------------------------------------
PNT SIGNAL NAME  COLOR LV TYPE                 F
---------------------------------------------------
24B CA-DATA3
25A CA-DATA4
25B CA-DATA5
26A CA-DATA6
26B CA-DATA7
27A + 0.0
27B + 0.0
28A CA-CHS05
28B CA-CHS06
29A CA-CHS07
29B CA-CHS08
30A + 0.0
30B + 0.0
31A
31B
32A
32B
---------------------------------------------------

ELM 31
    LINE INPUT/OUTPUT, CH 5                   J22
---------------------------------------------------
PNT SIGNAL NAME  COLOR LV TYPE                 F
---------------------------------------------------
 1  LOUFA-05
 2  LOUFB-05
 3  KEY
 4  + 0.0
 5  LINFA-05
 6  LINFB-05
 7  + 0.0
---------------------------------------------------
                                              ./.

GRP  2          1.820.703.00
                <--  <--  <--  CONTINUATION
=======================================

ELM 32
    NOISE REDUCTION, CH 5                     J23
---------------------------------------------------
PNT SIGNAL NAME  COLOR LV TYPE                 F
---------------------------------------------------
 1  CD-CAL05
 2  CD-REC05
 3  CD-REP05
 4  CD-ACT05
 5  KEY
 6  + 0.0
 7  DLBOB-05
 8  + 0.0
 9  DLBOA-05
10  + 0.0
11  DLBGN-05
12  + 0.0
13  DLBIN-05
---------------------------------------------------

ELM 33
    REPRODUCE PREAMPLIFIER, CH 5              J24
---------------------------------------------------
PNT SIGNAL NAME  COLOR LV TYPE                 F
---------------------------------------------------
 1  REPRE-05
 2  REPRO-05
 3  KEY
 4  + 0.0
---------------------------------------------------

ELM 34
    RECORD HEAD, CH 5                         J25
---------------------------------------------------
PNT SIGNAL NAME  COLOR LV TYPE                 F
---------------------------------------------------
 1  RECHL-05
 2  RECHH-05
 3  KEY
 4  + 0.0
---------------------------------------------------

ELM 35
    ERASE HEAD, CH 5                          J26
---------------------------------------------------
PNT SIGNAL NAME  COLOR LV TYPE                 F
---------------------------------------------------
 1  ERAHL-05
 2  ERAHH-05
 3  KEY
 4  ERAHO-05
---------------------------------------------------
```

```
*****************************************************************************************************************************
*    WILLI STUDER AG   *    L O C A T I O N     P I N     L I S T            *  89/07/20  *   8:15  *  P A G E  95   *
*****************************************************************************************************************************
*                              * TAPE TRANSPORT & AUDIO MCH *                 *  89/04/19 - 00                          *
*****************************************************************************************************************************
ASY  3                         AUDIO ELECTRONICS, CH 01 TO 08                                  <--  <--  <--  CONTINUATION

GRP  2          1.820.703.00
              <--  <--  <--  CONTINUATION
=======================================

ELM 36
    LINE INPUT/OUTPUT, CH 6                                  J27
---------------------------------------
PNT SIGNAL NAME  COLOR LV TYPE                                F
---------------------------------------
 1  LOUFA-06
 2  LOUFB-06
 3  KEY
 4  + 0.0
 5  LINFA-06
 6  LINFB-06
 7  + 0.0
---------------------------------------

ELM 37
    NOISE REDUCTION, CH 6                                    J28
---------------------------------------
PNT SIGNAL NAME  COLOR LV TYPE                                F
---------------------------------------
 1  CD-CAL06
 2  CD-REC06
 3  CD-REP06
 4  CD-ACT06
 5  KEY
 6  + 0.0
 7  DLBOB-06
 8  + 0.0
 9  DLBOA-06
10  + 0.0
11  DLBGN-06
12  + 0.0
13  DLBIN-06
---------------------------------------

ELM 38
    REPRODUCE PREAMPLIFIER, CH 6                             J29
---------------------------------------
PNT SIGNAL NAME  COLOR LV TYPE                                F
---------------------------------------
 1  REPRE-06
 2  REPRO-06
 3  KEY
 4  + 0.0
---------------------------------------
                                                            ./.

GRP  2          1.820.703.00
              <--  <--  <--  CONTINUATION
=======================================

ELM 39
    RECORD HEAD, CH 6                                        J30
---------------------------------------
PNT SIGNAL NAME  COLOR LV TYPE                                F
---------------------------------------
 1  RECHL-06
 2  RECHH-06
 3  KEY
 4  + 0.0
---------------------------------------

ELM 40
    ERASE HEAD, CH 6                                         J31
---------------------------------------
PNT SIGNAL NAME  COLOR LV TYPE                                F
---------------------------------------
 1  ERAHL-06
 2  ERAHH-06
 3  KEY
 4  ERAHO-06
---------------------------------------

ELM 41
    LINE INPUT/OUTPUT, CH 7                                  J32
---------------------------------------
PNT SIGNAL NAME  COLOR LV TYPE                                F
---------------------------------------
 1  LOUFA-07
 2  LOUFB-07
 3  KEY
 4  + 0.0
 5  LINFA-07
 6  LINFB-07
 7  + 0.0
---------------------------------------
                                                            ./.

GRP  2          1.820.703.00
              <--  <--  <--  CONTINUATION
=======================================

ELM 42
    NOISE REDUCTION, CH 7                                    J33
---------------------------------------
PNT SIGNAL NAME  COLOR LV TYPE                                F
---------------------------------------
 1  CD-CAL07
 2  CD-REC07
 3  CD-REP07
 4  CD-ACT07
 5  KEY
 6  + 0.0
 7  DLBOB-07
 8  + 0.0
 9  DLBOA-07
10  + 0.0
11  DLBGN-07
12  + 0.0
13  DLBIN-07
---------------------------------------

ELM 43
    REPRODUCE PREAMPLIFIER, CH 7                             J34
---------------------------------------
PNT SIGNAL NAME  COLOR LV TYPE                                F
---------------------------------------
 1  REPRE-07
 2  REPRO-07
 3  KEY
 4  + 0.0
---------------------------------------

ELM 44
    RECORD HEAD, CH 7                                        J35
---------------------------------------
PNT SIGNAL NAME  COLOR LV TYPE                                F
---------------------------------------
 1  RECHL-07
 2  RECHH-07
 3  KEY
 4  + 0.0
---------------------------------------

ELM 45
    ERASE HEAD, CH 7                                         J36
---------------------------------------
PNT SIGNAL NAME  COLOR LV TYPE                                F
---------------------------------------
 1  ERAHL-07
 2  ERAHH-07
 3  KEY
 4  ERAHO-07
---------------------------------------
```

```
*****************************************************************************************************************************
*    WILLI STUDER AG   *    L O C A T I O N     P I N     L I S T            *  89/07/20  *   8:15  *  P A G E  96   *
*****************************************************************************************************************************
*                              * TAPE TRANSPORT & AUDIO MCH *                 *  89/04/19 - 00                          *
*****************************************************************************************************************************
ASY  3                         AUDIO ELECTRONICS, CH 01 TO 08                                  <--  <--  <--  CONTINUATION

GRP  2          1.820.703.00
              <--  <--  <--  CONTINUATION
=======================================

ELM 46
    LINE INPUT/OUTPUT, CH 8                                  J37
---------------------------------------
PNT SIGNAL NAME  COLOR LV TYPE                                F
---------------------------------------
 1  LOUFA-08
 2  LOUFB-08
 3  KEY
 4  + 0.0
 5  LINFA-08
 6  LINFB-08
 7  + 0.0
---------------------------------------

ELM 47
    NOISE REDUCTION, CH 8                                    J38
---------------------------------------
PNT SIGNAL NAME  COLOR LV TYPE                                F
---------------------------------------
 1  CD-CAL08
 2  CD-REC08
 3  CD-REP08
 4  CD-ACT08
 5  KEY
 6  + 0.0
 7  DLBOB-08
 8  + 0.0
 9  DLBOA-08
10  + 0.0
11  DLBGN-08
12  + 0.0
13  DLBIN-08
---------------------------------------

ELM 48
    REPRODUCE PREAMPLIFIER, CH 8                             J39
---------------------------------------
PNT SIGNAL NAME  COLOR LV TYPE                                F
---------------------------------------
 1  REPRE-08
 2  REPRO-08
 3  KEY
 4  + 0.0
---------------------------------------
                                                            ./.

GRP  2          1.820.703.00
              <--  <--  <--  CONTINUATION
=======================================

ELM 49
    RECORD HEAD, CH 8                                        J40
---------------------------------------
PNT SIGNAL NAME  COLOR LV TYPE                                F
---------------------------------------
 1  RECHL-08
 2  RECHH-08
 3  KEY
 4  + 0.0
---------------------------------------

ELM 50
    ERASE HEAD, CH 8                                         J41
---------------------------------------
PNT SIGNAL NAME  COLOR LV TYPE                                F
---------------------------------------
 1  ERAHL-08
 2  ERAHH-08
 3  KEY
 4  ERAHO-08
---------------------------------------

ELM 60
    JUMPER SWITCH                                            JS01
---------------------------------------
PNT SIGNAL NAME  COLOR LV TYPE                                F
---------------------------------------
 1  T-A1P-AB
 2  S-A1P-B
 3  T-A1N-AB
 4  S-A1N-B
 5  T-A1P-AB
---------------------------------------
                                                            ./.

GRP  2          1.820.703.00
              <--  <--  <--  CONTINUATION
=======================================

ELM 70
                                                             P01
---------------------------------------
PNT SIGNAL NAME  COLOR LV TYPE                                F
---------------------------------------
 1  + 0.0
 2  + 0.0
 3  + 5.6
 4  + 5.6
 5  +15.0
 6  -15.0
 7  TONGEN
 8  SGNGND
 9  REFLEV
10  + 0.0
11  TA-CLPAB
12  TA-CLMAB
13  + 0.0
14  T-AOP-AB
15  T-AON-AB
16  + 0.0
17  T-A1P-AB
18  T-A1N-AB
19  + 0.0
20  T-RWP-AB
21  T-RWN-AB
22  + 0.0
23  T-SL-AB
24  + 0.0
25  T-DT0-AB
26  + 0.0
27  T-DT1-AB
28  + 0.0
29  T-DT2-AB
30  + 0.0
31  T-DT3-AB
32  + 0.0
33  T-DT4-AB
34  + 0.0
35  T-DT5-AB
36  + 0.0
37  T-DT6-AB
38  + 0.0
39  T-DT7-AB
40  + 0.0
---------------------------------------
```

```
*****************************************************************************************************************************
*    WILLI STUDER AG   *    L O C A T I O N     P I N     L I S T              * 89/07/20 *   8:15 *   P A G E  97   *
*****************************************************************************************************************************
*                              * TAPE TRANSPORT & AUDIO MCH *                  * 89/04/19 - 00                           *
*****************************************************************************************************************************
ASY  3                        AUDIO ELECTRONICS, CH 01 TO 08                                    <--  <--  <--  CONTINUATION

GRP  3        1.820.778.00
    DISTRIBUTION BOARD          AUDIO RACK
=======================================

ELM  1
    SUPPLY PREAMPLIFIER CH 1 TO  8   J01
---------------------------------------
PNT SIGNAL NAME  COLOR LV TYPE          F
---------------------------------------
 1  + 5.6
 2  GND
 3  + 0.0
 4  +15.0
 5  -15.0
 6  KEY
---------------------------------------

ELM  2
    SUPPLY ASY03, GRP01              J02
---------------------------------------
PNT SIGNAL NAME  COLOR LV TYPE          F
---------------------------------------
 1  + 5.6                 BX
 2  GND                   BX
 3  + 0.0                 BX
 4  + 0.0                 BX
 5  +15.0                 BX
 6  +15.0                 BX
 7  -15.0                 BX
 8  -15.0                 BX
 9  RESERVE               BX
10  +24.0NRS              BX
---------------------------------------

ELM  3
    SUPPLY ASY03, GRP02              J03
---------------------------------------
PNT SIGNAL NAME  COLOR LV TYPE          F
---------------------------------------
 1  + 5.6                 BX
 2  GND                   BX
 3  + 0.0                 BX
 4  + 0.0                 BX
 5  +15.0                 BX
 6  +15.0                 BX
 7  -15.0                 BX
 8  -15.0                 BX
 9  RESERVE               BX
10  +24.0NRS              BX
---------------------------------------
                                  ./.

GRP  3        1.820.778.00
                    <--  <--  <--  CONTINUATION
=======================================

ELM  4
    SUPPLY CONNECTOR                 J04
---------------------------------------
PNT SIGNAL NAME  COLOR LV TYPE          F
---------------------------------------
 1  + 5.6                 BX
 2  GND                   BX
 3  + 0.0                 BX
 4  + 0.0                 BX
 5  +15.0                 BX
 6                        BX
 7  -15.0                 BX
 8                        BX
 9  RESERVE               BX
10  +24.0NRS              BX
---------------------------------------

ELM  5
    SUPPLY ASY03, GRP04 (NRS OPTION) J05
---------------------------------------
PNT SIGNAL NAME  COLOR LV TYPE          F
---------------------------------------
 1  + 5.6                 BX
 2  GND                   BX
 3  + 0.0                 BX
 4  + 0.0                 BX
 5  +15.0                 BX
 6  +15.0                 BX
 7  -15.0                 BX
 8  -15.0                 BX
 9  RESERVE               BX
10  +24.0NRS              BX
---------------------------------------

GRP  4        1.820.809.00
    BASISBOARD, NRS OPTION   CH 01 TO 08
=======================================

ELM  1
    NOISE REDUCTION UNIT CH 1        J11
---------------------------------------
PNT SIGNAL NAME  COLOR LV TYPE          F
---------------------------------------
 1
 1A
 2
 2B
 3  CD-CAL01
 3C
 4  DLBOA-01
 4D
 5  KEY
 5E KEY
 6
 6F
 7
 7H
 8
 8J
 9
 9K
10  DLBIN-01
10L
11  + 0.0
11M
12
12N
13
13P
14
14R
15  +24.0NRS
15S
16  + 0.0
16T CD-ACT01
---------------------------------------

ELM  2
    NOISE REDUCTION UNIT CH 2        J21
---------------------------------------
PNT SIGNAL NAME  COLOR LV TYPE          F
---------------------------------------
---------------------------------------

ELM  3
    NOISE REDUCTION UNIT CH 3        J31
---------------------------------------
PNT SIGNAL NAME  COLOR LV TYPE          F
---------------------------------------
```

```
*****************************************************************************************************************************
*    WILLI STUDER AG   *    L O C A T I O N     P I N     L I S T              * 89/07/20 *   8:15 *   P A G E  98   *
*****************************************************************************************************************************
*                              * TAPE TRANSPORT & AUDIO MCH *                  * 89/04/19 - 00                           *
*****************************************************************************************************************************
ASY  3                        AUDIO ELECTRONICS, CH 01 TO 08                                    <--  <--  <--  CONTINUATION

GRP  4        1.820.809.00
                    <--  <--  <--  CONTINUATION
=======================================

ELM  4
    NOISE REDUCTION UNIT CH 4        J41
---------------------------------------
PNT SIGNAL NAME  COLOR LV TYPE          F
---------------------------------------
---------------------------------------

ELM  5
    NOISE REDUCTION UNIT CH 5        J51
---------------------------------------
PNT SIGNAL NAME  COLOR LV TYPE          F
---------------------------------------
---------------------------------------

ELM  6
    NOISE REDUCTION UNIT CH 6        J61
---------------------------------------
PNT SIGNAL NAME  COLOR LV TYPE          F
---------------------------------------
---------------------------------------

ELM  7
    NOISE REDUCTION UNIT CH 7        J71
---------------------------------------
PNT SIGNAL NAME  COLOR LV TYPE          F
---------------------------------------
---------------------------------------

ELM  8
    NOISE REDUCTION UNIT CH 8        J81
---------------------------------------
PNT SIGNAL NAME  COLOR LV TYPE          F
---------------------------------------
---------------------------------------

ELM 10
    TO GRP03, ELM05                  P10
---------------------------------------
PNT SIGNAL NAME  COLOR LV TYPE          F
---------------------------------------
 1  + 5.6         3       AX
 2  GND                   AX
 3  + 0.0         0       AX
 4  + 0.0                 AX
 5  +15.0                 AX
 6  +15.0                 AX
 7  -15.0                 AX
 8  -15.0                 AX
 9  RESERVE               AX
10  +24.0NRS      7       AX
---------------------------------------

GRP  4        1.820.809.00
                    <--  <--  <--  CONTINUATION
=======================================

ELM 11
    TO GRP01, ELM32 (AUDIO BASIS B.) P11
---------------------------------------
PNT SIGNAL NAME  COLOR LV TYPE          F
---------------------------------------
 1  CD-CAL01      1       D
 2  CD-REC01      8       D
 3  CD-REP01      5       D
 4  CD-ACT01      9       D
 5  KEY
 6  + 0.0         0       D
 7
 8  + 0.0         S       D
 9  DLBOA-01      9       D
10  + 0.0         0       D
11
12  + 0.0         S       D
13  DLBIN-01      9       D
---------------------------------------

ELM 21
    TO GRP01, ELM37 (AUDIO BASIS B.) P21
---------------------------------------
PNT SIGNAL NAME  COLOR LV TYPE          F
---------------------------------------
 1  CD-CAL02      1       D
 2  CD-REC02      8       D
 3  CD-REP02      5       D
 4  CD-ACT02      9       D
 5  KEY
 6  + 0.0         0       D
 7
 8  + 0.0         S       D
 9  DLBOA-02      9       D
10  + 0.0         0       D
11
12  + 0.0         S       D
13  DLBIN-02      9       D
---------------------------------------
                                  ./.

GRP  4        1.820.809.00
                    <--  <--  <--  CONTINUATION
=======================================

ELM 31
    TO GRP01, ELM42 (AUDIO BASIS B.) P31
---------------------------------------
PNT SIGNAL NAME  COLOR LV TYPE          F
---------------------------------------
 1  CD-CAL03      1       D
 2  CD-REC03      8       D
 3  CD-REP03      5       D
 4  CD-ACT03      9       D
 5  KEY
 6  + 0.0         0       D
 7
 8  + 0.0         S       D
 9  DLBOA-03      9       D
10  + 0.0         0       D
11
12  + 0.0         S       D
13  DLBIN-03      9       D
---------------------------------------

ELM 41
    TO GRP01, ELM47 (AUDIO BASIS B.) P41
---------------------------------------
PNT SIGNAL NAME  COLOR LV TYPE          F
---------------------------------------
 1  CD-CAL04      1       D
 2  CD-REC04      8       D
 3  CD-REP04      5       D
 4  CD-ACT04      9       D
 5  KEY
 6  + 0.0         0       D
 7
 8  + 0.0         S       D
 9  DLBOA-04      9       D
10  + 0.0         0       D
11
12  + 0.0         S       D
13  DLBIN-04      9       D
---------------------------------------
                                  ./.
```

```
*    WILLI STUDER AG   *   L O C A T I O N    P I N    L I S T          * 89/07/20 *   8:15 *   P A G E  99   *
*                           * TAPE TRANSPORT & AUDIO MCH *                * 89/04/19 - 00                        *
ASY  3                    AUDIO ELECTRONICS, CH 01 TO 08                                    <--  <--  <--  CONTINUATION

GRP  4        1.820.809.00
              <--  <--  <--  CONTINUATION
=======================================

ELM 51
    TO GRP02, ELM32 (AUDIO BASIS B.) P51
---------------------------------------
PNT SIGNAL NAME  COLOR LV TYPE        F
---------------------------------------
 1  CD-CAL05     1       D
 2  CD-REC05     8       D
 3  CD-REP05     5       D
 4  CD-ACT05     9       D
 5  KEY
 6  + 0.0        0       D
 7
 8  + 0.0        S       D
 9  DLBOA-05     9       D
10  + 0.0        0       D
11
12  + 0.0        S       D
13  DLBIN-05     9       D
---------------------------------------

ELM 61
    TO GRP02, ELM37 (AUDIO BASIS B.) P61
---------------------------------------
PNT SIGNAL NAME  COLOR LV TYPE        F
---------------------------------------
 1  CD-CAL06     1       D
 2  CD-REC06     8       D
 3  CD-REP06     5       D
 4  CD-ACT06     9       D
 5  KEY
 6  + 0.0        0       D
 7
 8  + 0.0        S       D
 9  DLBOA-06     9       D
10  + 0.0        0       D
11
12  + 0.0        S       D
13  DLBIN-06     9       D
---------------------------------------
                                  ./.

GRP  4        1.820.809.00
              <--  <--  <--  CONTINUATION
=======================================

ELM 71
    TO GRP02, ELM42 (AUDIO BASIS B.) P71
---------------------------------------
PNT SIGNAL NAME  COLOR LV TYPE        F
---------------------------------------
 1  CD-CAL07     1       D
 2  CD-REC07     8       D
 3  CD-REP07     5       D
 4  CD-ACT07     9       D
 5  KEY
 6  + 0.0        0       D
 7
 8  + 0.0        S       D
 9  DLBOA-07     9       D
10  + 0.0        0       D
11
12  + 0.0        S       D
13  DLBIN-07     9       D
---------------------------------------

ELM 81
    TO GRP02, ELM47 (AUDIO BASIS B.) P81
---------------------------------------
PNT SIGNAL NAME  COLOR LV TYPE        F
---------------------------------------
 1  CD-CAL08     1       D
 2  CD-REC08     8       D
 3  CD-REP08     5       D
 4  CD-ACT08     9       D
 5  KEY
 6  + 0.0        0       D
 7
 8  + 0.0        S       D
 9  DLBOA-08     9       D
10  + 0.0        0       D
11
12  + 0.0        S       D
13  DLBIN-08     9       D
---------------------------------------

GRP 11        1.820.863.00
    LINE INPUTS, CH 01 TO 08
=======================================

ELM  1
    LINE INPUT, CH 1                XLR J01
---------------------------------------
PNT SIGNAL NAME  COLOR LV TYPE        F
---------------------------------------
 1  + 0.0
 2  LINSA-01
 3  LINSB-01
---------------------------------------

ELM  2
    LINE INPUT, CH 2                XLR J02
---------------------------------------
PNT SIGNAL NAME  COLOR LV TYPE        F
---------------------------------------
 1  + 0.0
 2  LINSA-02
 3  LINSB-02
---------------------------------------

ELM  3
    LINE INPUT, CH 3                XLR J03
---------------------------------------
PNT SIGNAL NAME  COLOR LV TYPE        F
---------------------------------------
 1  + 0.0
 2  LINSA-03
 3  LINSB-03
---------------------------------------

ELM  4
    LINE INPUT, CH 4                XLR J04
---------------------------------------
PNT SIGNAL NAME  COLOR LV TYPE        F
---------------------------------------
 1  + 0.0
 2  LINSA-04
 3  LINSB-04
---------------------------------------

ELM  5
    LINE INPUT, CH 5                XLR J05
---------------------------------------
PNT SIGNAL NAME  COLOR LV TYPE        F
---------------------------------------
 1  + 0.0
 2  LINSA-05
 3  LINSB-05
---------------------------------------
```

```
*    WILLI STUDER AG   *   L O C A T I O N    P I N    L I S T          * 89/07/20 *   8:15 *   P A G E 100   *
*                           * TAPE TRANSPORT & AUDIO MCH *                * 89/04/19 - 00                        *
ASY  3                    AUDIO ELECTRONICS, CH 01 TO 08                                    <--  <--  <--  CONTINUATION

GRP 11        1.820.863.00
              <--  <--  <--  CONTINUATION
=======================================

ELM  6
    LINE INPUT, CH 6                XLR J06
---------------------------------------
PNT SIGNAL NAME  COLOR LV TYPE        F
---------------------------------------
 1  + 0.0
 2  LINSA-06
 3  LINSB-06
---------------------------------------

ELM  7
    LINE INPUT, CH 7                XLR J07
---------------------------------------
PNT SIGNAL NAME  COLOR LV TYPE        F
---------------------------------------
 1  + 0.0
 2  LINSA-07
 3  LINSB-07
---------------------------------------

ELM  8
    LINE INPUT, CH 8                XLR J08
---------------------------------------
PNT SIGNAL NAME  COLOR LV TYPE        F
---------------------------------------
 1  + 0.0
 2  LINSA-08
 3  LINSB-08
---------------------------------------
                                  ./.

GRP 11        1.820.863.00
              <--  <--  <--  CONTINUATION
=======================================

ELM  9
    LINE INPUTS, CH 1 TO  8          P01
---------------------------------------
PNT SIGNAL NAME  COLOR LV TYPE        F
---------------------------------------
 1  LINFA-08
 2  + 0.0
 3  LINFA-07
 4  LINFA-06
 5  + 0.0
 6  LINFA-05
 7  LINFA-04
 8  + 0.0
 9  LINFA-03
10  LINFA-02
11  + 0.0
12  LINFA-01
13  + 0.0
14  LINFB-08
15  + 0.0
16  LINFB-07
17  LINFB-06
18  + 0.0
19  LINFB-05
20  LINFB-04
21  + 0.0
22  LINFB-03
23  LINFB-02
24  + 0.0
25  LINFB-01
---------------------------------------

GRP 14        1.820.864.00
    LINE OUTPUTS, CH 01 TO 08
=======================================

ELM  1
    LINE OUTPUT, CH 1               XLR P01
---------------------------------------
PNT SIGNAL NAME  COLOR LV TYPE        F
---------------------------------------
 1  + 0.0
 2  LOUSA-01
 3  LOUSB-01
---------------------------------------

ELM  2
    LINE OUTPUT, CH 2               XLR P02
---------------------------------------
PNT SIGNAL NAME  COLOR LV TYPE        F
---------------------------------------
 1  + 0.0
 2  LOUSA-02
 3  LOUSB-02
---------------------------------------

ELM  3
    LINE OUTPUT, CH 3               XLR P03
---------------------------------------
PNT SIGNAL NAME  COLOR LV TYPE        F
---------------------------------------
 1  + 0.0
 2  LOUSA-03
 3  LOUSB-03
---------------------------------------

ELM  4
    LINE OUTPUT, CH 4               XLR P04
---------------------------------------
PNT SIGNAL NAME  COLOR LV TYPE        F
---------------------------------------
 1  + 0.0
 2  LOUSA-04
 3  LOUSB-04
---------------------------------------

ELM  5
    LINE OUTPUT, CH 5               XLR P05
---------------------------------------
PNT SIGNAL NAME  COLOR LV TYPE        F
---------------------------------------
 1  + 0.0
 2  LOUSA-05
 3  LOUSB-05
---------------------------------------
```

```
*****************************************************************************************************************************
*    WILLI STUDER AG    *    L O C A T I O N     P I N     L I S T            *  89/07/20  *   8:15  *  P A G E 101    *
*****************************************************************************************************************************
*                            * TAPE TRANSPORT & AUDIO MCH *                   *  89/04/19 - 00                            *
*****************************************************************************************************************************
ASY  3                        AUDIO ELECTRONICS, CH 01 TO 08                                          <--  <--  <--  CONTINUATION

GRP 14          1.820.864.00
              <--  <--  <--  CONTINUATION
=======================================

ELM  6
    LINE OUTPUT, CH 6                    XLR P06
---------------------------------------------------
PNT SIGNAL NAME  COLOR LV TYPE                F
---------------------------------------------------
 1  + 0.0
 2  LOUSA-06
 3  LOUSB-06
---------------------------------------------------

ELM  7
    LINE OUTPUT, CH 7                    XLR P07
---------------------------------------------------
PNT SIGNAL NAME  COLOR LV TYPE                F
---------------------------------------------------
 1  + 0.0
 2  LOUSA-07
 3  LOUSB-07
---------------------------------------------------

ELM  8
    LINE OUTPUT, CH 8                    XLR P08
---------------------------------------------------
PNT SIGNAL NAME  COLOR LV TYPE                F
---------------------------------------------------
 1  + 0.0
 2  LOUSA-08
 3  LOUSB-08
---------------------------------------------------
                                              ./.

GRP 14          1.820.864.00
              <--  <--  <--  CONTINUATION
=======================================

ELM  9
    LINE OUTPUTS, CH 1 TO  8             P09
---------------------------------------------------
PNT SIGNAL NAME  COLOR LV TYPE                F
---------------------------------------------------
 1  LOUFA-08
 2  + 0.0
 3  LOUFA-07
 4  LOUFA-06
 5  + 0.0
 6  LOUFA-05
 7  LOUFA-04
 8  + 0.0
 9  LOUFA-03
10  LOUFA-02
11  + 0.0
12  LOUFA-01
13  + 0.0
14  LOUFB-08
15  + 0.0
16  LOUFB-07
17  LOUFB-06
18  + 0.0
19  LOUFB-05
20  LOUFB-04
21  + 0.0
22  LOUFB-03
23  LOUFB-02
24  + 0.0
25  LOUFB-01
---------------------------------------------------
```

```
*****************************************************************************************************************************
*    WILLI STUDER AG    *    L O C A T I O N     P I N     L I S T            *  89/07/20  *   8:15  *  P A G E 102    *
*****************************************************************************************************************************
*                            * TAPE TRANSPORT & AUDIO MCH *                   *  89/04/19 - 00                            *
*****************************************************************************************************************************
ASY  4                        AUDIO ELECTRONICS, CH 09 TO 16

GRP  1          1.820.703.00
    BASISBOARD, CH 09 TO 12
=======================================

ELM  1          1.820.715.00
    LINE AMPLIFIER, CH 9                 J01
---------------------------------------------------
PNT SIGNAL NAME  COLOR LV TYPE                F
---------------------------------------------------
 1  MONIT-09
 2  + 0.0
 3  LOUFA-09
 4  LOUFB-09
 5  + 0.0
 6  INPDI-09
 7  INPAD-09
 8  RECIN-09
 9  + 0.0
10  TAPAD-09
11  TAPMS-09
12  TAPDI-09
13  + 0.0
14  LINFA-09
15  LINFB-09
16  CA-EQL09
17  CA-SYN09
18  CA-LSD09
19  KEY
20  TA-ACT09
21  + 0.0
22  +15.0
23  -15.0
24  + 5.6
25  TA-C307K
26  CA-SAF09
27  CA-ADR-R
28  CA-ADR-S
29  CA-ADR-T
30  CA-ADR-U
31  CA-DATA0
32  CA-DATA1
33  CA-DATA2
34  CA-DATA3
35  CA-DATA4
36  CA-DATA5
37  CA-DATA6
38  CA-DATA7
39  CA-CHS09
---------------------------------------------------
                                              ./.

GRP  1          1.820.703.00
              <--  <--  <--  CONTINUATION
=======================================

ELM  2          1.820.815.00
    CONTROLLER INTERNAL NRS CH 9         J02
---------------------------------------------------
PNT SIGNAL NAME  COLOR LV TYPE                F
---------------------------------------------------
 1A DLBIN-09
 1B + 0.0
 2A + 0.0
 2B DLBGN-09
 3A + 0.0
 3B + 0.0
 4A DLBOA-09
 4B + 0.0
 5A + 0.0
 5B DLBOB-09
 6A + 0.0
 6B + 0.0
 7A CD-ACT09
 7B CD-REP09
 8A CD-REC09
 8B CD-CAL09
 9A + 0.0
 9B + 0.0
10A MONIT-09
10B CA-TC-09
11A INPDI-09
11B INPAD-09
12A RECIN-09
12B
13A + 0.0
13B + 0.0
14A TAPAD-09
14B TAPDI-09
15A +15.0
15B +15.0
16A + 5.6
16B + 5.6
17A + 0.0
17B + 0.0
18A -15.0
18B -15.0
19A TONGEN
19B SGNGND
20A REFLEV
20B + 0.0
21A TA-C307K
21B CA-SAF09
22A TA-CMP09
22B CA-SAF-C
23A + 0.0
23B CA-LSW09
24A CA-LSD09

GRP  1          1.820.703.00
              <--  <--  <--  CONTINUATION
=======================================

ELM  2          1.820.815.00
              <--  <--  <--  CONTINUATION
---------------------------------------------------
PNT SIGNAL NAME  COLOR LV TYPE                F
---------------------------------------------------
24B
25A CA-ADR-R
25B CA-ADR-S
26A CA-ADR-T
26B CA-ADR-U
27A CA-DATA0
27B CA-DATA1
28A CA-DATA2
28B CA-DATA3
29A CA-DATA4
29B CA-DATA5
30A CA-DATA6
30B CA-DATA7
31A + 0.0
31B + 0.0
32A CA-CHS09
32B + 0.0
---------------------------------------------------
                                              ./.
```

```
*****************************************************************************************************************************************
*   WILLI STUDER AG   *   L O C A T I O N     P I N     L I S T                 * 89/07/20 *   8:15 *   P A G E 103   *
*****************************************************************************************************************************************
*                             * TAPE TRANSPORT & AUDIO MCH *                    * 89/04/19 - 00                                      *
*****************************************************************************************************************************************
ASY  4                        AUDIO ELECTRONICS, CH 09 TO 16                                          <--  <--  <--  CONTINUATION

GRP  1         1.820.703.00
             <--  <--  <--  CONTINUATION
=======================================

ELM  3         1.820.710.00
     REPRODUCE AMPLIFIER, CH 9                  J03
---------------------------------------
PNT SIGNAL NAME  COLOR LV TYPE          F
---------------------------------------
 1  TAPLI-09
 2  EQUAL-09
 3  SYPRE-09
 4  K-REC-09
 5  + 0.0
 6  REPRE-09
 7  REPRO-09
 8  + 0.0
 9  CA-TC-09
10  TAPDI-09
11  + 0.0
12  SYNHL-09
13  SYNHH-09
14  + 0.0
15  CA-EQL09
16  CA-SYN09
17  CA-LSW09
18  + 0.0
19  KEY
20  TA-ACT09
21  + 0.0
22  +15.0
23  -15.0
24  + 5.6
25  TA-C307K
26  CA-SAF09
27  CA-ADR-R
28  CA-ADR-S
29  CA-ADR-T
30  CA-ADR-U
31  CA-DATA0
32  CA-DATA1
33  CA-DATA2
34  CA-DATA3
35  CA-DATA4
36  CA-DATA5
37  CA-DATA6
38  CA-DATA7
39  CA-CHS09
---------------------------------------

GRP  1         1.820.703.00
             <--  <--  <--  CONTINUATION
=======================================

ELM  4         1.820.811.00
     RECORD AMPLIFIER, CH 9                 J04
---------------------------------------
PNT SIGNAL NAME  COLOR LV TYPE          F
---------------------------------------
 1  RECIN-09
 2  EQUAL-09
 3  BIAFB-09
 4  K-REC-09
 5  + 0.0
 6  BIASA-09
 7  BIASB-09
 8  BIASC-09
 9  RECHL-09
10  RECHH-09
11  + 0.0
12  SYNHL-09
13  SYNHH-09
14  + 0.0
15  AFCSW-09
16  + 0.0
17  CA-BAD09
18  CA-RSW09
19  KEY
20  TA-ACT09
21  + 0.0
22  +15.0
23  -15.0
24  + 5.6
25  TA-C307K
26  CA-SAF09
27  CA-ADR-R
28  CA-ADR-S
29  CA-ADR-T
30  CA-ADR-U
31  CA-DATA0
32  CA-DATA1
33  CA-DATA2
34  CA-DATA3
35  CA-DATA4
36  CA-DATA5
37  CA-DATA6
38  CA-DATA7
39  CA-CHS09
---------------------------------------

GRP  1         1.820.703.00
             <--  <--  <--  CONTINUATION
=======================================

ELM  5         1.820.813.00
     HF-DRIVER, CH 9                    J05
---------------------------------------
PNT SIGNAL NAME  COLOR LV TYPE          F
---------------------------------------
 1  BIAFB-09
 2  K-REC-09
 3  + 0.0
 4  + 0.0
 5  BIASA-09
 6  BIASB-09
 7  BIASC-09
 8
 9  ERACS-09
10  AFCSW-09
11  + 0.0
12  ERAHL-09
13  ERAHM-09
14  ERAHH-09
15  ERAHO-09
16  + 0.0
17  CA-BAD09
18  CA-RSW09
19  KEY
20  TA-ACT09
21  + 0.0
22  +15.0
23  -15.0
24  + 5.6
25  TA-C307K
26  CA-SAF09
27  CA-ADR-R
28  CA-ADR-S
29  CA-ADR-T
30  CA-ADR-U
31  CA-DATA0
32  CA-DATA1
33  CA-DATA2
34  CA-DATA3
35  CA-DATA4
36  CA-DATA5
37  CA-DATA6
38  CA-DATA7
39  CA-CHS09
---------------------------------------
```

```
*****************************************************************************************************************************************
*   WILLI STUDER AG   *   L O C A T I O N     P I N     L I S T                 * 89/07/20 *   8:15 *   P A G E 104   *
*****************************************************************************************************************************************
*                             * TAPE TRANSPORT & AUDIO MCH *                    * 89/04/19 - 00                                      *
*****************************************************************************************************************************************
ASY  4                        AUDIO ELECTRONICS, CH 09 TO 16                                          <--  <--  <--  CONTINUATION

GRP  1         1.820.703.00
             <--  <--  <--  CONTINUATION
=======================================

ELM  6         1.820.715.00
     LINE AMPLIFIER, CH10               J06
---------------------------------------
PNT SIGNAL NAME  COLOR LV TYPE          F
---------------------------------------
 1  MONIT-10
 2  + 0.0
 3  LOUFA-10
 4  LOUFB-10
 5  + 0.0
 6  INPDI-10
 7  INPAD-10
 8  RECIN-10
 9  + 0.0
10  TAPAD-10
11  TAPMS-10
12  TAPDI-10
13  + 0.0
14  LINFA-10
15  LINFB-10
16  CA-EQL10
17  CA-SYN10
18  CA-LSO10
19  KEY
20  TA-ACT10
21  + 0.0
22  +15.0
23  -15.0
24  + 5.6
25  TA-C307K
26  CA-SAF10
27  CA-ADR-R
28  CA-ADR-S
29  CA-ADR-T
30  CA-ADR-U
31  CA-DATA0
32  CA-DATA1
33  CA-DATA2
34  CA-DATA3
35  CA-DATA4
36  CA-DATA5
37  CA-DATA6
38  CA-DATA7
39  CA-CHS10
---------------------------------------
                                        ./.

GRP  1         1.820.703.00
             <--  <--  <--  CONTINUATION
=======================================

ELM  7         1.820.815.00
     CONTROLLER INTERNAL NRS CH10       J07
---------------------------------------
PNT SIGNAL NAME  COLOR LV TYPE          F
---------------------------------------
 1A DLBIN-10
 1B + 0.0
 2A + 0.0
 2B DLBGN-10
 3A + 0.0
 3B + 0.0
 4A DLBOA-10
 4B + 0.0
 5A + 0.0
 5B DLBOB-10
 6A + 0.0
 6B + 0.0
 7A CD-ACT10
 7B CD-REP10
 8A CD-REC10
 8B CD-CAL10
 9A + 0.0
 9B + 0.0
10A MONIT-10
10B CA-TC-10
11A INPDI-10
11B INPAD-10
12A RECIN-10
12B
13A + 0.0
13B + 0.0
14A TAPAD-10
14B TAPDI-10
15A +15.0
15B +15.0
16A + 5.6
16B + 5.6
17A + 0.0
17B + 0.0
18A -15.0
18B -15.0
19A TONGEN
19B SGNGND
20A REFLEV
20B + 0.0
21A TA-C307K
21B CA-SAF10
22A TA-CMP10
22B CA-SAF-C
23A + 0.0
23B CA-LSW10
24A CA-LSO10

GRP  1         1.820.703.00
             <--  <--  <--  CONTINUATION
=======================================

ELM  7         1.820.815.00
             <--  <--  <--  CONTINUATION
---------------------------------------
PNT SIGNAL NAME  COLOR LV TYPE          F
---------------------------------------
24B
25A CA-ADR-R
25B CA-ADR-S
26A CA-ADR-T
26B CA-ADR-U
27A CA-DATA0
27B CA-DATA1
28A CA-DATA2
28B CA-DATA3
29A CA-DATA4
29B CA-DATA5
30A CA-DATA6
30B CA-DATA7
31A + 0.0
31B + 0.0
32A CA-CHS10
32B + 0.0
---------------------------------------
                                        ./.
```

```
*****************************************************************************************************************************
*   WILLI STUDER AG   *   L O C A T I O N   P I N   L I S T                 * 89/07/20 *  8:15 *  P A G E 105   *
*****************************************************************************************************************************
*                          * TAPE TRANSPORT & AUDIO MCH *                    * 89/04/19 - C0                              *
*****************************************************************************************************************************
ASY  4                        AUDIO ELECTRONICS, CH 09 TO 16                                  <--  <--  <--  CONTINUATION

GRP  1        1.820.703.00                GRP  1        1.820.703.00                GRP  1        1.820.703.00
            <--  <--  <--  CONTINUATION              <--  <--  <--  CONTINUATION              <--  <--  <--  CONTINUATION
=====================================   =====================================   =====================================

ELM  8        1.820.710.00                ELM  9        1.820.811.00                ELM 10        1.820.813.00
    REPRODUCE AMPLIFIER, CH10     J08       RECORD AMPLIFIER, CH10        J09         HF-DRIVER, CH10               J10
-------------------------------------   -------------------------------------   -------------------------------------
PNT SIGNAL NAME  COLOR LV TYPE      F   PNT SIGNAL NAME  COLOR LV TYPE      F   PNT SIGNAL NAME  COLOR LV TYPE      F
-------------------------------------   -------------------------------------   -------------------------------------
 1  TAPLI-10                             1  RECIN-10                             1  BIAFB-10
 2  EQUAL-10                             2  EQUAL-10                             2  K-REC-10
 3  SYPRE-10                             3  BIAFB-10                             3  + 0.0
 4  K-REC-10                             4  K-REC-10                             4  + 0.0
 5  + 0.0                                5  + 0.0                                5  BIASA-10
 6  REPRE-10                             6  BIASA-10                             6  BIASB-10
 7  REPRO-10                             7  BIASB-10                             7  BIASC-10
 8  + 0.0                                8  BIASC-10                             8
 9  CA-TC-10                             9  RECHL-10                             9  ERACS-10
10  TAPDI-10                            10  RECHH-10                            10  AFCSW-10
11  + 0.0                               11  + 0.0                               11  + 0.0
12  SYNHL-10                            12  SYNHL-10                            12  ERAHL-10
13  SYNHH-10                            13  SYNHH-10                            13  ERAHM-10
14  + 0.0                               14  + 0.0                               14  ERAHH-10
15  CA-EQL10                            15  AFCSW-10                            15  ERAHO-10
16  CA-SYN10                            16  + 0.0                               16  + 0.0
17  CA-LSW10                            17  CA-BAD10                            17  CA-BAD10
18  + 0.0                               18  CA-RSW10                            18  CA-RSW10
19  KEY                                 19  KEY                                 19  KEY
20  TA-ACT10                            20  TA-ACT10                            20  TA-ACT10
21  + 0.0                               21  + 0.0                               21  + 0.0
22  +15.0                               22  +15.0                               22  +15.0
23  -15.0                               23  -15.0                               23  -15.0
24  + 5.6                               24  + 5.6                               24  + 5.6
25  TA-C307K                            25  TA-C307K                            25  TA-C307K
26  CA-SAF10                            26  CA-SAF10                            26  CA-SAF10
27  CA-ADR-R                            27  CA-ADR-R                            27  CA-ADR-R
28  CA-ADR-S                            28  CA-ADR-S                            28  CA-ADR-S
29  CA-ADR-T                            29  CA-ADR-T                            29  CA-ADR-T
30  CA-ADR-U                            30  CA-ADR-U                            30  CA-ADR-U
31  CA-DATA0                            31  CA-DATA0                            31  CA-DATA0
32  CA-DATA1                            32  CA-DATA1                            32  CA-DATA1
33  CA-DATA2                            33  CA-DATA2                            33  CA-DATA2
34  CA-DATA3                            34  CA-DATA3                            34  CA-DATA3
35  CA-DATA4                            35  CA-DATA4                            35  CA-DATA4
36  CA-DATA5                            36  CA-DATA5                            36  CA-DATA5
37  CA-DATA6                            37  CA-DATA6                            37  CA-DATA6
38  CA-DATA7                            38  CA-DATA7                            38  CA-DATA7
39  CA-CHS10                            39  CA-CHS10                            39  CA-CHS10
-------------------------------------   -------------------------------------   -------------------------------------
```

```
*****************************************************************************************************************************
*   WILLI STUDER AG   *   L O C A T I O N   P I N   L I S T                 * 89/07/20 *  8:15 *  P A G E 106   *
*****************************************************************************************************************************
*                          * TAPE TRANSPORT & AUDIO MCH *                    * 89/04/19 - 00                              *
*****************************************************************************************************************************
ASY  4                        AUDIO ELECTRONICS, CH 09 TO 16                                  <--  <--  <--  CONTINUATION

GRP  1        1.820.703.00                GRP  1        1.820.703.00                GRP  1        1.820.703.00
            <--  <--  <--  CONTINUATION              <--  <--  <--  CONTINUATION              <--  <--  <--  CONTINUATION
=====================================   =====================================   =====================================

ELM 11        1.820.715.00                ELM 12        1.820.815.00                ELM 12        1.820.815.00
    LINE AMPLIFIER, CH11          J11       CONTROLLER INTERNAL NRS CH11  J12                     <--  <--  <--  CONTINUATION
-------------------------------------   -------------------------------------   -------------------------------------
PNT SIGNAL NAME  COLOR LV TYPE      F   PNT SIGNAL NAME  COLOR LV TYPE      F   PNT SIGNAL NAME  COLOR LV TYPE      F
-------------------------------------   -------------------------------------   -------------------------------------
 1  MONIT-11                            1A DLBIN-11                             24B
 2  + 0.0                               1B + 0.0                                25A CA-ADR-R
 3  LOUFA-11                            2A + 0.0                                25B CA-ADR-S
 4  LOUFB-11                            2B DLBGN-11                             26A CA-ADR-T
 5  + 0.0                               3A + 0.0                                26B CA-ADR-U
 6  INPDI-11                            3B + 0.0                                27A CA-DATA0
 7  INPAD-11                            4A DLBOA-11                             27B CA-DATA1
 8  RECIN-11                            4B + 0.0                                28A CA-DATA2
 9  + 0.0                               5A + 0.0                                28B CA-DATA3
10  TAPAD-11                            5B DLBOB-11                             29A CA-DATA4
11  TAPMS-11                            6A + 0.0                                29B CA-DATA5
12  TAPDI-11                            6B + 0.0                                30A CA-DATA6
13  + 0.0                               7A CD-ACT11                             30B CA-DATA7
14  LINFA-11                            7B CD-REP11                             31A + 0.0
15  LINFB-11                            8A CD-REC11                             31B + 0.0
16  CA-EQL11                            8B CD-CAL11                             32A CA-CHS11
17  CA-SYN11                            9A + 0.0                                32B + 0.0
18  CA-LSO11                            9B + 0.0                             -------------------------------------
19  KEY                                10A MONIT-11                                                        ./.
20  TA-ACT11                           10B CA-TC-11
21  + 0.0                              11A INPDI-11
22  +15.0                              11B INPAD-11
23  -15.0                              12A RECIN-11
24  + 5.6                              12B
25  TA-C307K                           13A + 0.0
26  CA-SAF11                           13B + 0.0
27  CA-ADR-R                           14A TAPAD-11
28  CA-ADR-S                           14B TAPDI-11
29  CA-ADR-T                           15A +15.0
30  CA-ADR-U                           15B +15.0
31  CA-DATA0                           16A + 5.6
32  CA-DATA1                           16B + 5.6
33  CA-DATA2                           17A + 0.0
34  CA-DATA3                           17B + 0.0
35  CA-DATA4                           18A -15.0
36  CA-DATA5                           18B -15.0
37  CA-DATA6                           19A TONGEN
38  CA-DATA7                           19B SGNGND
39  CA-CHS11                           20A REFLEV
-------------------------------------  20B + 0.0
                              ./.      21A TA-C307K
                                       21B CA-SAF11
                                       22A TA-CMP11
                                       22B CA-SAF-C
                                       23A + 0.0
                                       23B CA-LSW11
                                       24A CA-LSO11
```

WILLI STUDER AG * L O C A T I O N P I N L I S T * 89/07/20 * 8:15 * P A G E 107
* TAPE TRANSPORT & AUDIO MCH * * 89/04/19 - 00
ASY 4 AUDIO ELECTRONICS, CH 09 TO 16

GRP 1 1.820.703.00 <-- <-- <-- CONTINUATION

ELM 13 1.820.710.00 J13
REPRODUCE AMPLIFIER, CH11

PNT	SIGNAL NAME	COLOR	LV	TYPE	F
1	TAPLI-11				
2	EQUAL-11				
3	SYPRE-11				
4	K-REC-11				
5	+ 0.0				
6	REPRE-11				
7	REPRO-11				
8	+ 0.0				
9	CA-TC-11				
10	TAPDI-11				
11	+ 0.0				
12	SYNHL-11				
13	SYNHH-11				
14	+ 0.0				
15	CA-EQL11				
16	CA-SYN11				
17	CA-LSW11				
18	+ 0.0				
19	KEY				
20	TA-ACT11				
21	+ 0.0				
22	+15.0				
23	-15.0				
24	+ 5.6				
25	TA-C307K				
26	CA-SAF11				
27	CA-ADR-R				
28	CA-ADR-S				
29	CA-ADR-T				
30	CA-ADR-U				
31	CA-DATA0				
32	CA-DATA1				
33	CA-DATA2				
34	CA-DATA3				
35	CA-DATA4				
36	CA-DATA5				
37	CA-DATA6				
38	CA-DATA7				
39	CA-CHS11				

GRP 1 1.820.703.00 <-- <-- <-- CONTINUATION

ELM 14 1.820.811.00 J14
RECORD AMPLIFIER, CH11

PNT	SIGNAL NAME	COLOR	LV	TYPE	F
1	RECIN-11				
2	EQUAL-11				
3	BIAFB-11				
4	K-REC-11				
5	+ 0.0				
6	BIASA-11				
7	BIASB-11				
8	BIASC-11				
9	RECHL-11				
10	RECHH-11				
11	+ 0.0				
12	SYNHL-11				
13	SYNHH-11				
14	+ 0.0				
15	AFCSW-11				
16	+ 0.0				
17	CA-BAD11				
18	CA-RSW11				
19	KEY				
20	TA-ACT11				
21	+ 0.0				
22	+15.0				
23	-15.0				
24	+ 5.6				
25	TA-C307K				
26	CA-SAF11				
27	CA-ADR-R				
28	CA-ADR-S				
29	CA-ADR-T				
30	CA-ADR-U				
31	CA-DATA0				
32	CA-DATA1				
33	CA-DATA2				
34	CA-DATA3				
35	CA-DATA4				
36	CA-DATA5				
37	CA-DATA6				
38	CA-DATA7				
39	CA-CHS11				

GRP 1 1.820.703.00 <-- <-- <-- CONTINUATION

ELM 15 1.820.813.00 J15
HF-DRIVER, CH11

PNT	SIGNAL NAME	COLOR	LV	TYPE	F
1	BIAFB-11				
2	K-REC-11				
3	+ 0.0				
4	+ 0.0				
5	BIASA-11				
6	BIASB-11				
7	BIASC-11				
8					
9	ERACS-11				
10	AFCSW-11				
11	+ 0.0				
12	ERAHL-11				
13	ERAHM-11				
14	ERAHH-11				
15	ERAHO-11				
16	+ 0.0				
17	CA-BAD11				
18	CA-RSW11				
19	KEY				
20	TA-ACT11				
21	+ 0.0				
22	+15.0				
23	-15.0				
24	+ 5.6				
25	TA-C307K				
26	CA-SAF11				
27	CA-ADR-R				
28	CA-ADR-S				
29	CA-ADR-T				
30	CA-ADR-U				
31	CA-DATA0				
32	CA-DATA1				
33	CA-DATA2				
34	CA-DATA3				
35	CA-DATA4				
36	CA-DATA5				
37	CA-DATA6				
38	CA-DATA7				
39	CA-CHS11				

WILLI STUDER AG * L O C A T I O N P I N L I S T * 89/07/20 * 8:15 * P A G E 108
* TAPE TRANSPORT & AUDIO MCH * * 89/04/19 - 00
ASY 4 AUDIO ELECTRONICS, CH 09 TO 16

GRP 1 1.820.703.00 <-- <-- <-- CONTINUATION

ELM 16 1.820.715.00 J16
LINE AMPLIFIER, CH12

PNT	SIGNAL NAME	COLOR	LV	TYPE	F
1	MONIT-12				
2	+ 0.0				
3	LOUFA-12				
4	LOUFB-12				
5	+ 0.0				
6	INPDI-12				
7	INPAD-12				
8	RECIN-12				
9	+ 0.0				
10	TAPAD-12				
11	TAPMS-12				
12	TAPDI-12				
13	+ 0.0				
14	LINFA-12				
15	LINFB-12				
16	CA-EQL12				
17	CA-SYN12				
18	CA-LSO12				
19	KEY				
20	TA-ACT12				
21	+ 0.0				
22	+15.0				
23	-15.0				
24	+ 5.6				
25	TA-C307K				
26	CA-SAF12				
27	CA-ADR-R				
28	CA-ADR-S				
29	CA-ADR-T				
30	CA-ADR-U				
31	CA-DATA0				
32	CA-DATA1				
33	CA-DATA2				
34	CA-DATA3				
35	CA-DATA4				
36	CA-DATA5				
37	CA-DATA6				
38	CA-DATA7				
39	CA-CHS12				

./.

GRP 1 1.820.703.00 <-- <-- <-- CONTINUATION

ELM 17 1.820.815.00 J17
CONTROLLER INTERNAL NRS CH12

PNT	SIGNAL NAME	COLOR	LV	TYPE	F
1A	DLBIN-12				
1B	+ 0.0				
2A	+ 0.0				
2B	DLBGN-12				
3A	+ 0.0				
3B	+ 0.0				
4A	DLBOA-12				
4B	+ 0.0				
5A	+ 0.0				
5B	DLBGB-12				
6A	+ 0.0				
6B	+ 0.0				
7A	CD-ACT12				
7B	CD-REP12				
8A	CD-REC12				
8B	CD-CAL12				
9A	+ 0.0				
9B	+ 0.0				
10A	MONIT-12				
10B	CA-TC-12				
11A	INPDI-12				
11B	INPAD-12				
12A	RECIN-12				
12B					
13A	+ 0.0				
13B	+ 0.0				
14A	TAPAD-12				
14B	TAPDI-12				
15A	+15.0				
15B	+15.0				
16A	+ 5.6				
16B	+ 5.6				
17A	+ 0.0				
17B	+ 0.0				
18A	-15.0				
18B	-15.0				
19A	TONGEN				
19B	SGNGND				
20A	REFLEV				
20B	+ 0.0				
21A	TA-C307K				
21B	CA-SAF12				
22A	TA-CMP12				
22B	CA-SAF-C				
23A	+ 0.0				
23B	CA-LSW12				
24A	CA-LSO12				

GRP 1 1.820.703.00 <-- <-- <-- CONTINUATION

ELM 17 1.820.815.00 <-- <-- <-- CONTINUATION

PNT	SIGNAL NAME	COLOR	LV	TYPE	F
24B					
25A	CA-ADR-R				
25B	CA-ADR-S				
26A	CA-ADR-T				
26B	CA-ADR-U				
27A	CA-DATA0				
27B	CA-DATA1				
28A	CA-DATA2				
28B	CA-DATA3				
29A	CA-DATA4				
29B	CA-DATA5				
30A	CA-DATA6				
30B	CA-DATA7				
31A	+ 0.0				
31B	+ 0.0				
32A	CA-CHS12				
32B	+ 0.0				

./.

```
*****************************************************************************************************************************
*    WILLI STUDER AG   *    L O C A T I O N     P I N     L I S T          * 89/07/20 *   8:15 *   P A G E 109   *
*****************************************************************************************************************************
*                              * TAPE TRANSPORT & AUDIO MCH *                * 89/04/19 - 00                              *
*****************************************************************************************************************************
ASY  4                         AUDIO ELECTRONICS, CH 09 TO 16                                  <--  <--  <--  CONTINUATION

GRP  1         1.820.703.00
             <--  <--  <--  CONTINUATION
=====================================

ELM 18         1.820.710.00
    REPRODUCE AMPLIFIER, CH12                    J18
-------------------------------------
PNT SIGNAL NAME  COLOR LV TYPE          F
-------------------------------------
 1  TAPLI-12
 2  EQUAL-12
 3  SYPRE-12
 4  K-REC-12
 5  + 0.0
 6  REPRE-12
 7  REPRO-12
 8  + 0.0
 9  CA-TC-12
10  TAPDI-12
11  + 0.0
12  SYNHL-12
13  SYNHH-12
14  + 0.0
15  CA-EQL12
16  CA-SYN12
17  CA-LSW12
18  + 0.0
19  KEY
20  TA-ACT12
21  + 0.0
22  +15.0
23  -15.0
24  + 5.6
25  TA-C307K
26  CA-SAF12
27  CA-ADR-R
28  CA-ADR-S
29  CA-ADR-T
30  CA-ADR-U
31  CA-DATA0
32  CA-DATA1
33  CA-DATA2
34  CA-DATA3
35  CA-DATA4
36  CA-DATA5
37  CA-DATA6
38  CA-DATA7
39  CA-CHS12
-------------------------------------

GRP  1         1.820.703.00
             <--  <--  <--  CONTINUATION
=====================================

ELM 19         1.820.811.00
    RECORD AMPLIFIER, CH12                   J19
-------------------------------------
PNT SIGNAL NAME  COLOR LV TYPE          F
-------------------------------------
 1  RECIN-12
 2  EQUAL-12
 3  BIAFB-12
 4  K-REC-12
 5  + 0.0
 6  BIASA-12
 7  BIASB-12
 8  BIASC-12
 9  RECHL-12
10  RECHH-12
11  + 0.0
12  SYNHL-12
13  SYNHH-12
14  + 0.0
15  AFCSW-12
16  + 0.0
17  CA-BAD12
18  CA-RSW12
19  KEY
20  TA-ACT12
21  + 0.0
22  +15.0
23  -15.0
24  + 5.6
25  TA-C307K
26  CA-SAF12
27  CA-ADR-R
28  CA-ADR-S
29  CA-ADR-T
30  CA-ADR-U
31  CA-DATA0
32  CA-DATA1
33  CA-DATA2
34  CA-DATA3
35  CA-DATA4
36  CA-DATA5
37  CA-DATA6
38  CA-DATA7
39  CA-CHS12
-------------------------------------

GRP  1         1.820.703.00
             <--  <--  <--  CONTINUATION
=====================================

ELM 20         1.820.813.00
    HF-DRIVER, CH12                          J20
-------------------------------------
PNT SIGNAL NAME  COLOR LV TYPE          F
-------------------------------------
 1  BIAFB-12
 2  K-REC-12
 3  + 0.0
 4  + 0.0
 5  BIASA-12
 6  BIASB-12
 7  BIASC-12
 8
 9  ERACS-12
10  AFCSW-12
11  + 0.0
12  ERAHL-12
13  ERAHM-12
14  ERAHH-12
15  ERAHO-12
16  + 0.0
17  CA-BAD12
18  CA-RSW12
19  KEY
20  TA-ACT12
21  + 0.0
22  +15.0
23  -15.0
24  + 5.6
25  TA-C307K
26  CA-SAF12
27  CA-ADR-R
28  CA-ADR-S
29  CA-ADR-T
30  CA-ADR-U
31  CA-DATA0
32  CA-DATA1
33  CA-DATA2
34  CA-DATA3
35  CA-DATA4
36  CA-DATA5
37  CA-DATA6
38  CA-DATA7
39  CA-CHS12
-------------------------------------
```

```
*****************************************************************************************************************************
*    WILLI STUDER AG   *    L O C A T I O N     P I N     L I S T          * 89/07/20 *   8:15 *   P A G E 110   *
*****************************************************************************************************************************
*                              * TAPE TRANSPORT & AUDIO MCH *                * 89/04/19 - 00                              *
*****************************************************************************************************************************
ASY  4                         AUDIO ELECTRONICS, CH 09 TO 16                                  <--  <--  <--  CONTINUATION

GRP  1         1.820.703.00
             <--  <--  <--  CONTINUATION
=====================================

ELM 21         1.820.717.00
    BUS CONVERTER                            J21
-------------------------------------
PNT SIGNAL NAME  COLOR LV TYPE          F
-------------------------------------
 1A TA-CLPCD
 1B TA-CLMCD
 2A T-A0P-CD
 2B T-A0N-CD
 3A S-A1P-C
 3B S-A1N-CD
 4A T-RWP-CD
 4B T-RWN-CD
 5A T-SL-CD
 5B
 6A T-DT0-CD
 6B T-DT1-CD
 7A T-DT2-CD
 7B T-DT3-CD
 8A T-DT4-CD
 8B T-DT5-CD
 9A T-DT6-CD
 9B T-DT7-CD
10A TA-CMP09
10B TA-CMP10
11A TA-CMP11
11B TA-CMP12
12A TA-ACT09
12B TA-ACT10
13A TA-ACT11
13B TA-ACT12
14A
14B
15A +15.0
15B +15.0
16A + 5.6
16B + 5.6
17A + 0.0
17B + 0.0
18A -15.0
18B -15.0
19A TA-C307K
19B
20A CA-SAF-C
20B
21A CA-ADR-R
21B CA-ADR-S
22A CA-ADR-T
22B CA-ADR-U
23A CA-DATA0
23B CA-DATA1
24A CA-DATA2

GRP  1         1.820.703.00
             <--  <--  <--  CONTINUATION
=====================================

ELM 21         1.820.717.00
             <--  <--  <--  CONTINUATION
-------------------------------------
PNT SIGNAL NAME  COLOR LV TYPE          F
-------------------------------------
24B CA-DATA3
25A CA-DATA4
25B CA-DATA5
26A CA-DATA6
26B CA-DATA7
27A + 0.0
27B + 0.0
28A CA-CHS09
28B CA-CHS10
29A CA-CHS11
29B CA-CHS12
30A + 0.0
30B + 0.0
31A
31B
32A
32B
-------------------------------------

ELM 31
    LINE INPUT/OUTPUT, CH 9                  J22
-------------------------------------
PNT SIGNAL NAME  COLOR LV TYPE          F
-------------------------------------
 1  LOUFA-09
 2  LOUFB-09
 3  KEY
 4  + 0.0
 5  LINFA-09
 6  LINFB-09
 7  + 0.0
-------------------------------------
                                              ./.

GRP  1         1.820.703.00
             <--  <--  <--  CONTINUATION
=====================================

ELM 32
    NOISE REDUCTION, CH 9                    J23
-------------------------------------
PNT SIGNAL NAME  COLOR LV TYPE          F
-------------------------------------
 1  CD-CAL09
 2  CD-REC09
 3  CD-REP09
 4  CD-ACT09
 5  KEY
 6  + 0.0
 7  DLBQB-09
 8  + 0.0
 9  DLBQA-09
10  + 0.0
11  DLBGN-09
12  + 0.0
13  DLBIN-09
-------------------------------------

ELM 33
    REPRODUCE PREAMPLIFIER, CH 9             J24
-------------------------------------
PNT SIGNAL NAME  COLOR LV TYPE          F
-------------------------------------
 1  REPRE-09
 2  REPRO-09
 3  KEY
 4  + 0.0
-------------------------------------

ELM 34
    RECORD HEAD, CH 9                        J25
-------------------------------------
PNT SIGNAL NAME  COLOR LV TYPE          F
-------------------------------------
 1  RECHL-09
 2  RECHH-09
 3  KEY
 4  + 0.0
-------------------------------------

ELM 35
    ERASE HEAD, CH 9                         J26
-------------------------------------
PNT SIGNAL NAME  COLOR LV TYPE          F
-------------------------------------
 1  ERAHL-09
 2  ERAHH-09
 3  KEY
 4  ERAHO-09
-------------------------------------
```

```
*****************************************************************************************************************************
*    WILLI STUDER AG   *    L O C A T I O N     P I N     L I S T            * 89/07/20  *   8:15  *  P A G E 111   *
*****************************************************************************************************************************
*                              * TAPE TRANSPORT & AUDIO MCH *                 * 89/04/19 - 00                             *
*****************************************************************************************************************************
ASY  4                         AUDIO ELECTRONICS, CH 09 TO 16                                  <--  <--  <--  CONTINUATION

GRP  1          1.820.703.00
              <--  <--  <--  CONTINUATION
=======================================

ELM 36
    LINE INPUT/OUTPUT, CH10                 J27
---------------------------------------------------
PNT SIGNAL NAME  COLOR LV TYPE               F
---------------------------------------------------
 1  LOUFA-10
 2  LOUFB-10
 3  KEY
 4  + 0.0
 5  LINFA-10
 6  LINFB-10
 7  + 0.0
---------------------------------------------------

ELM 37
    NOISE REDUCTION, CH10                   J28
---------------------------------------------------
PNT SIGNAL NAME  COLOR LV TYPE               F
---------------------------------------------------
 1  CD-CAL10
 2  CD-REC10
 3  CD-REP10
 4  CD-ACT10
 5  KEY
 6  + 0.0
 7  DLBOB-10
 8  + 0.0
 9  DLBOA-10
10  + 0.0
11  DLBGN-10
12  + 0.0
13  DLBIN-10
---------------------------------------------------

ELM 38
    REPRODUCE PREAMPLIFIER, CH10            J29
---------------------------------------------------
PNT SIGNAL NAME  COLOR LV TYPE               F
---------------------------------------------------
 1  REPRE-10
 2  REPRO-10
 3  KEY
 4  + 0.0
---------------------------------------------------
                                                                                                              ./.

GRP  1          1.820.703.00
              <--  <--  <--  CONTINUATION
=======================================

ELM 39
    RECORD HEAD, CH10                       J30
---------------------------------------------------
PNT SIGNAL NAME  COLOR LV TYPE               F
---------------------------------------------------
 1  RECHL-10
 2  RECHH-10
 3  KEY
 4  + 0.0
---------------------------------------------------

ELM 40
    ERASE HEAD, CH10                        J31
---------------------------------------------------
PNT SIGNAL NAME  COLOR LV TYPE               F
---------------------------------------------------
 1  ERAHL-10
 2  ERAHH-10
 3  KEY
 4  ERAHO-10
---------------------------------------------------

ELM 41
    LINE INPUT/OUTPUT, CH11                 J32
---------------------------------------------------
PNT SIGNAL NAME  COLOR LV TYPE               F
---------------------------------------------------
 1  LOUFA-11
 2  LOUFB-11
 3  KEY
 4  + 0.0
 5  LINFA-11
 6  LINFB-11
 7  + 0.0
---------------------------------------------------
                                                                                                              ./.

GRP  1          1.820.703.00
              <--  <--  <--  CONTINUATION
=======================================

ELM 42
    NOISE REDUCTION, CH11                   J33
---------------------------------------------------
PNT SIGNAL NAME  COLOR LV TYPE               F
---------------------------------------------------
 1  CD-CAL11
 2  CD-REC11
 3  CD-REP11
 4  CD-ACT11
 5  KEY
 6  + 0.0
 7  DLBOB-11
 8  + 0.0
 9  DLBOA-11
10  + 0.0
11  DLBGN-11
12  + 0.0
13  DLBIN-11
---------------------------------------------------

ELM 43
    REPRODUCE PREAMPLIFIER, CH11            J34
---------------------------------------------------
PNT SIGNAL NAME  COLOR LV TYPE               F
---------------------------------------------------
 1  REPRE-11
 2  REPRO-11
 3  KEY
 4  + 0.0
---------------------------------------------------

ELM 44
    RECORD HEAD, CH11                       J35
---------------------------------------------------
PNT SIGNAL NAME  COLOR LV TYPE               F
---------------------------------------------------
 1  RECHL-11
 2  RECHH-11
 3  KEY
 4  + 0.0
---------------------------------------------------

ELM 45
    ERASE HEAD, CH11                        J36
---------------------------------------------------
PNT SIGNAL NAME  COLOR LV TYPE               F
---------------------------------------------------
 1  ERAHL-11
 2  ERAHH-11
 3  KEY
 4  ERAHO-11
---------------------------------------------------
```

```
*****************************************************************************************************************************
*    WILLI STUDER AG   *    L O C A T I O N     P I N     L I S T            * 89/07/20  *   8:15  *  P A G E 112   *
*****************************************************************************************************************************
*                              * TAPE TRANSPORT & AUDIO MCH *                 * 89/04/19 - 00                             *
*****************************************************************************************************************************
ASY  4                         AUDIO ELECTRONICS, CH 09 TO 16                                  <--  <--  <--  CONTINUATION

GRP  1          1.820.703.00
              <--  <--  <--  CONTINUATION
=======================================

ELM 46
    LINE INPUT/OUTPUT, CH12                 J37
---------------------------------------------------
PNT SIGNAL NAME  COLOR LV TYPE               F
---------------------------------------------------
 1  LOUFA-12
 2  LOUFB-12
 3  KEY
 4  + 0.0
 5  LINFA-12
 6  LINFB-12
 7  + 0.0
---------------------------------------------------

ELM 47
    NOISE REDUCTION, CH12                   J38
---------------------------------------------------
PNT SIGNAL NAME  COLOR LV TYPE               F
---------------------------------------------------
 1  CD-CAL12
 2  CD-REC12
 3  CD-REP12
 4  CD-ACT12
 5  KEY
 6  + 0.0
 7  DLBOB-12
 8  + 0.0
 9  DLBOA-12
10  + 0.0
11  DLBGN-12
12  + 0.0
13  DLBIN-12
---------------------------------------------------

ELM 48
    REPRODUCE PREAMPLIFIER, CH12            J39
---------------------------------------------------
PNT SIGNAL NAME  COLOR LV TYPE               F
---------------------------------------------------
 1  REPRE-12
 2  REPRO-12
 3  KEY
 4  + 0.0
---------------------------------------------------
                                                                                                              ./.

GRP  1          1.820.703.00
              <--  <--  <--  CONTINUATION
=======================================

ELM 49
    RECORD HEAD, CH12                       J40
---------------------------------------------------
PNT SIGNAL NAME  COLOR LV TYPE               F
---------------------------------------------------
 1  RECHL-12
 2  RECHH-12
 3  KEY
 4  + 0.0
---------------------------------------------------

ELM 50
    ERASE HEAD, CH12                        J41
---------------------------------------------------
PNT SIGNAL NAME  COLOR LV TYPE               F
---------------------------------------------------
 1  ERAHL-12
 2  ERAHH-12
 3  KEY
 4  ERAHO-12
---------------------------------------------------

ELM 60
    JUMPER SWITCH                           JS01
---------------------------------------------------
PNT SIGNAL NAME  COLOR LV TYPE               F
---------------------------------------------------
 1  T-A1P-CD
 2  S-A1P-C
 3  T-A1N-CD
 4  S-A1N-C
 5  T-A1P-CD
---------------------------------------------------
                                                                                                              ./.

GRP  1          1.820.703.00
              <--  <--  <--  CONTINUATION
=======================================

ELM 70
                                            P01
---------------------------------------------------
PNT SIGNAL NAME  COLOR LV TYPE               F
---------------------------------------------------
 1  + 0.0
 2  + 0.0
 3  + 5.6
 4  + 5.6
 5  +15.0
 6  -15.0
 7  TONGEN
 8  SGNGND
 9  REFLEV
10  + 0.0
11  TA-CLPCD
12  TA-CLMCD
13  + 0.0
14  T-AOP-CD
15  T-AON-CD
16  + 0.0
17  T-A1P-CD
18  T-A1N-CD
19  + 0.0
20  T-RWP-CD
21  T-RWN-CD
22  + 0.0
23  T-SL-CD
24  + 0.0
25  T-DT0-CD
26  + 0.0
27  T-DT1-CD
28  + 0.0
29  T-DT2-CD
30  + 0.0
31  T-DT3-CD
32  + 0.0
33  T-DT4-CD
34  + 0.0
35  T-DT5-CD
36  + 0.0
37  T-DT6-CD
38  + 0.0
39  T-DT7-CD
40  + 0.0
---------------------------------------------------
```

```
*****************************************************************************************************************************
*    WILLI STUDER AG   *    L O C A T I O N     P I N     L I S T            *  89/07/20  *   8:15  *   P A G E 113    *
*****************************************************************************************************************************
*                              * TAPE TRANSPORT & AUDIO MCH *                  *  89/04/19 - 00                            *
*****************************************************************************************************************************
ASY  4                         AUDIO ELECTRONICS, CH 09 TO 16                                  <--  <--  <--  CONTINUATION

GRP  2        1.820.703.00
    BASISBOARD, CH 13 TO 16
=====================================

ELM  1        1.820.715.00
    LINE AMPLIFIER, CH13                  J01
-------------------------------------------
PNT SIGNAL NAME  COLOR LV TYPE          F
-------------------------------------------
 1  MONIT-13
 2  + 0.0
 3  LOUFA-13
 4  LOUFB-13
 5  + 0.0
 6  INPDI-13
 7  INPAD-13
 8  RECIN-13
 9  + 0.0
10  TAPAD-13
11  TAPMS-13
12  TAPDI-13
13  + 0.0
14  LINFA-13
15  LINFB-13
16  CA-EQL13
17  CA-SYN13
18  CA-LSO13
19  KEY
20  TA-ACT13
21  + 0.0
22  +15.0
23  -15.0
24  + 5.6
25  TA-C307K
26  CA-SAF13
27  CA-ADR-R
28  CA-ADR-S
29  CA-ADR-T
30  CA-ADR-U
31  CA-DATA0
32  CA-DATA1
33  CA-DATA2
34  CA-DATA3
35  CA-DATA4
36  CA-DATA5
37  CA-DATA6
38  CA-DATA7
39  CA-CHS13
-------------------------------------------
                                        ./.

GRP  2        1.820.703.00
                        <--  <--  <--  CONTINUATION
=====================================

ELM  2        1.820.815.00
    CONTROLLER INTERNAL NRS CH13          J02
-------------------------------------------
PNT SIGNAL NAME  COLOR LV TYPE          F
-------------------------------------------
 1A DLBIN-13
 1B + 0.0
 2A + 0.0
 2B DLBGN-13
 3A + 0.0
 3B + 0.0
 4A DLBOA-13
 4B + 0.0
 5A + 0.0
 5B DLBOB-13
 6A + 0.0
 6B + 0.0
 7A CD-ACT13
 7B CD-REP13
 8A CD-REC13
 8B CD-CAL13
 9A + 0.0
 9B + 0.0
10A MONIT-13
10B CA-TC-13
11A INPDI-13
11B INPAD-13
12A RECIN-13
12B
13A + 0.0
13B + 0.0
14A TAPAD-13
14B TAPDI-13
15A +15.0
15B +15.0
16A + 5.6
16B + 5.6
17A + 0.0
17B + 0.0
18A -15.0
18B -15.0
19A TONGEN
19B SGNGND
20A REFLEV
20B + 0.0
21A TA-C307K
21B CA-SAF13
22A TA-CMP13
22B CA-SAF-D
23A + 0.0
23B CA-LSW13
24A CA-LSO13

GRP  2        1.820.703.00
                        <--  <--  <--  CONTINUATION
=====================================

ELM  2        1.820.815.00
                        <--  <--  <--  CONTINUATION
-------------------------------------------
PNT SIGNAL NAME  COLOR LV TYPE          F
-------------------------------------------
24B
25A CA-ADR-R
25B CA-ADR-S
26A CA-ADR-T
26B CA-ADR-U
27A CA-DATA0
27B CA-DATA1
28A CA-DATA2
28B CA-DATA3
29A CA-DATA4
29B CA-DATA5
30A CA-DATA6
30B CA-DATA7
31A + 0.0
31B + 0.0
32A CA-CHS13
32B + 0.0
-------------------------------------------
                                        ./.
```

```
*****************************************************************************************************************************
*    WILLI STUDER AG   *    L O C A T I O N     P I N     L I S T            *  89/07/20  *   8:15  *   P A G E 114    *
*****************************************************************************************************************************
*                              * TAPE TRANSPORT & AUDIO MCH *                  *  89/04/19 - CO                            *
*****************************************************************************************************************************
ASY  4                         AUDIO ELECTRONICS, CH 09 TO 16                                  <--  <--  <--  CONTINUATION

GRP  2        1.820.703.00
              <--  <--  <--  CONTINUATION
=====================================

ELM  3        1.820.710.00
    REPRODUCE AMPLIFIER, CH13             J03
-------------------------------------------
PNT SIGNAL NAME  COLOR LV TYPE          F
-------------------------------------------
 1  TAPLI-13
 2  EQUAL-13
 3  SYPRE-13
 4  K-REC-13
 5  + 0.0
 6  REPRE-13
 7  REPRO-13
 8  + 0.0
 9  CA-TC-13
10  TAPDI-13
11  + 0.0
12  SYNHL-13
13  SYNHH-13
14  + 0.0
15  CA-EQL13
16  CA-SYN13
17  CA-LSW13
18  + 0.0
19  KEY
20  TA-ACT13
21  + 0.0
22  +15.0
23  -15.0
24  + 5.6
25  TA-C307K
26  CA-SAF13
27  CA-ADR-R
28  CA-ADR-S
29  CA-ADR-T
30  CA-ADR-U
31  CA-DATA0
32  CA-DATA1
33  CA-DATA2
34  CA-DATA3
35  CA-DATA4
36  CA-DATA5
37  CA-DATA6
38  CA-DATA7
39  CA-CHS13
-------------------------------------------

GRP  2        1.820.703.00
                        <--  <--  <--  CONTINUATION
=====================================

ELM  4        1.820.811.00
    RECORD AMPLIFIER, CH13                J04
-------------------------------------------
PNT SIGNAL NAME  COLOR LV TYPE          F
-------------------------------------------
 1  RECIN-13
 2  EQUAL-13
 3  BIAFB-13
 4  K-REC-13
 5  + 0.0
 6  BIASA-13
 7  BIASB-13
 8  BIASC-13
 9  RECHL-13
10  RECHH-13
11  + 0.0
12  SYNHL-13
13  SYNHH-13
14  + 0.0
15  AFCSW-13
16  + 0.0
17  CA-BAD13
18  CA-RSW13
19  KEY
20  TA-ACT13
21  + 0.0
22  +15.0
23  -15.0
24  + 5.6
25  TA-C307K
26  CA-SAF13
27  CA-ADR-R
28  CA-ADR-S
29  CA-ADR-T
30  CA-ADR-U
31  CA-DATA0
32  CA-DATA1
33  CA-DATA2
34  CA-DATA3
35  CA-DATA4
36  CA-DATA5
37  CA-DATA6
38  CA-DATA7
39  CA-CHS13
-------------------------------------------

GRP  2        1.820.703.00
                        <--  <--  <--  CONTINUATION
=====================================

ELM  5        1.820.813.00
    HF-DRIVER, CH13                       J05
-------------------------------------------
PNT SIGNAL NAME  COLOR LV TYPE          F
-------------------------------------------
 1  BIAFB-13
 2  K-REC-13
 3  + 0.0
 4  + 0.0
 5  BIASA-13
 6  BIASB-13
 7  BIASC-13
 8
 9  ERACS-13
10  AFCSW-13
11  + 0.0
12  ERAHL-13
13  ERAHM-13
14  ERAHH-13
15  ERAHO-13
16  + 0.0
17  CA-BAD13
18  CA-RSW13
19  KEY
20  TA-ACT13
21  + 0.0
22  +15.0
23  -15.0
24  + 5.6
25  TA-C307K
26  CA-SAF13
27  CA-ADR-R
28  CA-ADR-S
29  CA-ADR-T
30  CA-ADR-U
31  CA-DATA0
32  CA-DATA1
33  CA-DATA2
34  CA-DATA3
35  CA-DATA4
36  CA-DATA5
37  CA-DATA6
38  CA-DATA7
39  CA-CHS13
-------------------------------------------
```

```
*****************************************************************************************************************************
*    WILLI STUDER AG   *    L O C A T I O N     P I N     L I S T            *  89/07/20  *   8:15  *   P A G E 115   *
*****************************************************************************************************************************
*                              * TAPE TRANSPORT & AUDIO MCH *                  *  89/04/19 - 00                            *
*****************************************************************************************************************************
ASY  4                         AUDIO ELECTRONICS, CH 09 TO 16                                    <--  <--  <--  CONTINUATION

GRP  2         1.820.703.00                  GRP  2         1.820.703.00                  GRP  2         1.820.703.00
              <--  <--  <--  CONTINUATION                   <--  <--  <--  CONTINUATION                  <--  <--  <--  CONTINUATION
=======================================    =======================================    =======================================

ELM  6         1.820.715.00                ELM  7         1.820.815.00                ELM  7         1.820.815.00
     LINE AMPLIFIER, CH14          J06          CONTROLLER INTERNAL NRS CH14    J07                                  <--  <--  <--  CONTINUATION
---------------------------------------    ---------------------------------------    ---------------------------------------
PNT SIGNAL NAME  COLOR LV TYPE       F     PNT SIGNAL NAME  COLOR LV TYPE       F     PNT SIGNAL NAME  COLOR LV TYPE       F
---------------------------------------    ---------------------------------------    ---------------------------------------
 1  MONIT-14                               1A DLBIN-14                               24B
 2  + 0.0                                  1B + 0.0                                  25A CA-ADR-R
 3  LOUFA-14                               2A + 0.0                                  25B CA-ADR-S
 4  LOUFB-14                               2B DLBGN-14                               26A CA-ADR-T
 5  + 0.0                                  3A + 0.0                                  26B CA-ADR-U
 6  INPDI-14                               3B + 0.0                                  27A CA-DATA0
 7  INPAD-14                               4A DLBOA-14                               27B CA-DATA1
 8  RECIN-14                               4B + 0.0                                  28A CA-DATA2
 9  + 0.0                                  5A + 0.0                                  28B CA-DATA3
10  TAPAD-14                               5B DLBOB-14                               29A CA-DATA4
11  TAPMS-14                               6A + 0.0                                  29B CA-DATA5
12  TAPDI-14                               6B + 0.0                                  30A CA-DATA6
13  + 0.0                                  7A CD-ACT14                               30B CA-DATA7
14  LINFA-14                               7B CD-REP14                               31A + 0.0
15  LINFB-14                               8A CD-REC14                               31B + 0.0
16  CA-EQL14                               8B CD-CAL14                               32A CA-CHS14
17  CA-SYN14                               9A + 0.0                                  32B + 0.0
18  CA-LSO14                               9B + 0.0                                 ---------------------------------------
19  KEY                                   10A MONIT-14                                                                  ./.
20  TA-ACT14                              10B CA-TC-14
21  + 0.0                                 11A INPDI-14
22  +15.0                                 11B INPAD-14
23  -15.0                                 12A RECIN-14
24  + 5.6                                 12B
25  TA-C307K                              13A + 0.0
26  CA-SAF14                              13B + 0.0
27  CA-ADR-R                              14A TAPAD-14
28  CA-ADR-S                              14B TAPDI-14
29  CA-ADR-T                              15A +15.0
30  CA-ADR-U                              15B +15.0
31  CA-DATA0                              16A + 5.6
32  CA-DATA1                              16B + 5.6
33  CA-DATA2                              17A + 0.0
34  CA-DATA3                              17B + 0.0
35  CA-DATA4                              18A -15.0
36  CA-DATA5                              18B -15.0
37  CA-DATA6                              19A TONGEN
38  CA-DATA7                              19B SGNGND
39  CA-CHS14                              20A REFLEV
---------------------------------------   20B + 0.0
                                  ./.     21A TA-C307K
                                          21B CA-SAF14
                                          22A TA-CMP14
                                          22B CA-SAF-D
                                          23A + 0.0
                                          23B CA-LSW14
                                          24A CA-LSO14
```

```
*****************************************************************************************************************************
*    WILLI STUDER AG   *    L O C A T I O N     P I N     L I S T            *  89/07/20  *   8:15  *   P A G E 116   *
*****************************************************************************************************************************
*                              * TAPE TRANSPORT & AUDIO MCH *                  *  89/04/19 - 00                            *
*****************************************************************************************************************************
ASY  4                         AUDIO ELECTRONICS, CH 09 TO 16                                    <--  <--  <--  CONTINUATION

GRP  2         1.820.703.00                  GRP  2         1.820.703.00                  GRP  2         1.820.703.00
              <--  <--  <--  CONTINUATION                   <--  <--  <--  CONTINUATION                  <--  <--  <--  CONTINUATION
=======================================    =======================================    =======================================

ELM  8         1.820.710.00                ELM  9         1.820.811.00                ELM 10         1.820.813.00
     REPRODUCE AMPLIFIER, CH14     J08          RECORD AMPLIFIER, CH14          J09          HF-DRIVER, CH14               J10
---------------------------------------    ---------------------------------------    ---------------------------------------
PNT SIGNAL NAME  COLOR LV TYPE       F     PNT SIGNAL NAME  COLOR LV TYPE       F     PNT SIGNAL NAME  COLOR LV TYPE       F
---------------------------------------    ---------------------------------------    ---------------------------------------
 1  TAPLI-14                               1  RECIN-14                                1  BIAFB-14
 2  EQUAL-14                               2  EQUAL-14                                2  K-REC-14
 3  SYPRE-14                               3  BIAFB-14                                3  + 0.0
 4  K-REC-14                               4  K-REC-14                                4  + 0.0
 5  + 0.0                                  5  + 0.0                                   5  BIASA-14
 6  REPRE-14                               6  BIASA-14                                6  BIASB-14
 7  REPRO-14                               7  BIASB-14                                7  BIASC-14
 8  + 0.0                                  8  BIASC-14                                8
 9  CA-TC-14                               9  RECHL-14                                9  ERACS-14
10  TAPDI-14                              10  RECHH-14                               10  AFCSW-14
11  + 0.0                                 11  + 0.0                                  11  + 0.0
12  SYNHL-14                              12  SYNHL-14                               12  ERAHL-14
13  SYNHH-14                              13  SYNHH-14                               13  ERAHM-14
14  + 0.0                                 14  + 0.0                                  14  ERAHH-14
15  CA-EQL14                              15  AFCSW-14                               15  ERAHO-14
16  CA-SYN14                              16  + 0.0                                  16  + 0.0
17  CA-LSW14                              17  CA-BAD14                               17  CA-BAD14
18  + 0.0                                 18  CA-RSW14                               18  CA-RSW14
19  KEY                                   19  KEY                                    19  KEY
20  TA-ACT14                              20  TA-ACT14                               20  TA-ACT14
21  + 0.0                                 21  + 0.0                                  21  + 0.0
22  +15.0                                 22  +15.0                                  22  +15.0
23  -15.0                                 23  -15.0                                  23  -15.0
24  + 5.6                                 24  + 5.6                                  24  + 5.6
25  TA-C307K                              25  TA-C307K                               25  TA-C307K
26  CA-SAF14                              26  CA-SAF14                               26  CA-SAF14
27  CA-ADR-R                              27  CA-ADR-R                               27  CA-ADR-R
28  CA-ADR-S                              28  CA-ADR-S                               28  CA-ADR-S
29  CA-ADR-T                              29  CA-ADR-T                               29  CA-ADR-T
30  CA-ADR-U                              30  CA-ADR-U                               30  CA-ADR-U
31  CA-DATA0                              31  CA-DATA0                               31  CA-DATA0
32  CA-DATA1                              32  CA-DATA1                               32  CA-DATA1
33  CA-DATA2                              33  CA-DATA2                               33  CA-DATA2
34  CA-DATA3                              34  CA-DATA3                               34  CA-DATA3
35  CA-DATA4                              35  CA-DATA4                               35  CA-DATA4
36  CA-DATA5                              36  CA-DATA5                               36  CA-DATA5
37  CA-DATA6                              37  CA-DATA6                               37  CA-DATA6
38  CA-DATA7                              38  CA-DATA7                               38  CA-DATA7
39  CA-CHS14                              39  CA-CHS14                               39  CA-CHS14
---------------------------------------    ---------------------------------------    ---------------------------------------
```

```
*    WILLI STUDER AG   *    L O C A T I O N     P I N     L I S T            * 89/07/20  *   8:15  *  P A G E 117   *
*                           * TAPE TRANSPORT & AUDIO MCH *                    * 89/04/19 - CO                        *
ASY  4                      AUDIO ELECTRONICS, CH 09 TO 16                                    <--  <--  <--  CONTINUATION

GRP  2         1.820.703.00
              <--  <--  <--  CONTINUATION
=======================================

ELM 11         1.820.715.00
    LINE AMPLIFIER, CH15                  J11
---------------------------------------------
PNT SIGNAL NAME  COLOR LV TYPE             F
---------------------------------------------
 1  MONIT-15
 2  + 0.0
 3  LOUFA-15
 4  LOUFB-15
 5  + 0.0
 6  INPDI-15
 7  INPAD-15
 8  RECIN-15
 9  + 0.0
10  TAPAD-15
11  TAPMS-15
12  TAPDI-15
13  + 0.0
14  LINFA-15
15  LINFB-15
16  CA-EQL15
17  CA-SYN15
18  CA-LSO15
19  KEY
20  TA-ACT15
21  + 0.0
22  +15.0
23  -15.0
24  + 5.6
25  TA-C307K
26  CA-SAF15
27  CA-ADR-R
28  CA-ADR-S
29  CA-ADR-T
30  CA-ADR-U
31  CA-DATA0
32  CA-DATA1
33  CA-DATA2
34  CA-DATA3
35  CA-DATA4
36  CA-DATA5
37  CA-DATA6
38  CA-DATA7
39  CA-CHS15
---------------------------------------------
                                          ./.

GRP  2         1.820.703.00
              <--  <--  <--  CONTINUATION
=======================================

ELM 12         1.820.815.00
    CONTROLLER INTERNAL NRS CH15          J12
---------------------------------------------
PNT SIGNAL NAME  COLOR LV TYPE             F
---------------------------------------------
 1A DLBIN-15
 1B + 0.0
 2A + 0.0
 2B DLBGN-15
 3A + 0.0
 3B + 0.0
 4A DLBOA-15
 4B + 0.0
 5A + 0.0
 5B DLBOB-15
 6A + 0.0
 6B + 0.0
 7A CD-ACT15
 7B CD-REP15
 8A CD-REC15
 8B CD-CAL15
 9A + 0.0
 9B + 0.0
10A MONIT-15
10B CA-TC-15
11A INPDI-15
11B INPAD-15
12A RECIN-15
12B
13A + 0.0
13B + 0.0
14A TAPAD-15
14B TAPDI-15
15A +15.0
15B +15.0
16A + 5.6
16B + 5.6
17A + 0.0
17B + 0.0
18A -15.0
18B -15.0
19A TONGEN
19B SGNGND
20A REFLEV
20B + 0.0
21A TA-C307K
21B CA-SAF15
22A TA-CMP15
22B CA-SAF-D
23A + 0.0
23B CA-LSW15
24A CA-LSO15

GRP  2         1.820.703.00
              <--  <--  <--  CONTINUATION
=======================================

ELM 12         1.820.815.00
              <--  <--  <--  CONTINUATION
---------------------------------------------
PNT SIGNAL NAME  COLOR LV TYPE             F
---------------------------------------------
24B
25A CA-ADR-R
25B CA-ADR-S
26A CA-ADR-T
26B CA-ADR-U
27A CA-DATA0
27B CA-DATA1
28A CA-DATA2
28B CA-DATA3
29A CA-DATA4
29B CA-DATA5
30A CA-DATA6
30B CA-DATA7
31A + 0.0
31B + 0.0
32A CA-CHS15
32B + 0.0
---------------------------------------------
                                          ./.
```

```
*    WILLI STUDER AG   *    L O C A T I O N     P I N     L I S T            * 89/07/20  *   8:15  *  P A G E 118   *
*                           * TAPE TRANSPORT & AUDIO MCH *                    * 89/04/19 - 00                        *
ASY  4                      AUDIO ELECTRONICS, CH 09 TO 16                                    <--  <--  <--  CONTINUATION

GRP  2         1.820.703.00
              <--  <--  <--  CONTINUATION
=======================================

ELM 13         1.820.710.00
    REPRODUCE AMPLIFIER, CH15             J13
---------------------------------------------
PNT SIGNAL NAME  COLOR LV TYPE             F
---------------------------------------------
 1  TAPLI-15
 2  EQUAL-15
 3  SYPRE-15
 4  K-REC-15
 5  + 0.0
 6  REPRE-15
 7  REPRO-15
 8  + 0.0
 9  CA-TC-15
10  TAPDI-15
11  + 0.0
12  SYNHL-15
13  SYNHH-15
14  + 0.0
15  CA-EQL15
16  CA-SYN15
17  CA-LSW15
18  + 0.0
19  KEY
20  TA-ACT15
21  + 0.0
22  +15.0
23  -15.0
24  + 5.6
25  TA-C307K
26  CA-SAF15
27  CA-ADR-R
28  CA-ADR-S
29  CA-ADR-T
30  CA-ADR-U
31  CA-DATA0
32  CA-DATA1
33  CA-DATA2
34  CA-DATA3
35  CA-DATA4
36  CA-DATA5
37  CA-DATA6
38  CA-DATA7
39  CA-CHS15
---------------------------------------------

GRP  2         1.820.703.00
              <--  <--  <--  CONTINUATION
=======================================

ELM 14         1.820.811.00
    RECORD AMPLIFIER, CH15                J14
---------------------------------------------
PNT SIGNAL NAME  COLOR LV TYPE             F
---------------------------------------------
 1  RECIN-15
 2  EQUAL-15
 3  BIAFB-15
 4  K-REC-15
 5  + 0.0
 6  BIASA-15
 7  BIASB-15
 8  BIASC-15
 9  RECHL-15
10  RECHH-15
11  + 0.0
12  SYNHL-15
13  SYNHH-15
14  + 0.0
15  AFCSW-15
16  + 0.0
17  CA-BAD15
18  CA-RSW15
19  KEY
20  TA-ACT15
21  + 0.0
22  +15.0
23  -15.0
24  + 5.6
25  TA-C307K
26  CA-SAF15
27  CA-ADR-R
28  CA-ADR-S
29  CA-ADR-T
30  CA-ADR-U
31  CA-DATA0
32  CA-DATA1
33  CA-DATA2
34  CA-DATA3
35  CA-DATA4
36  CA-DATA5
37  CA-DATA6
38  CA-DATA7
39  CA-CHS15
---------------------------------------------

GRP  2         1.820.703.00
              <--  <--  <--  CONTINUATION
=======================================

ELM 15         1.820.813.00
    HF-DRIVER, CH15                       J15
---------------------------------------------
PNT SIGNAL NAME  COLOR LV TYPE             F
---------------------------------------------
 1  BIAFB-15
 2  K-REC-15
 3  + 0.0
 4  + 0.0
 5  BIASA-15
 6  BIASB-15
 7  BIASC-15
 8
 9  ERACS-15
10  AFCSW-15
11  + 0.0
12  ERAHL-15
13  ERAHM-15
14  ERAHH-15
15  ERAHO-15
16  + 0.0
17  CA-BAD15
18  CA-RSW15
19  KEY
20  TA-ACT15
21  + 0.0
22  +15.0
23  -15.0
24  + 5.6
25  TA-C307K
26  CA-SAF15
27  CA-ADR-R
28  CA-ADR-S
29  CA-ADR-T
30  CA-ADR-U
31  CA-DATA0
32  CA-DATA1
33  CA-DATA2
34  CA-DATA3
35  CA-DATA4
36  CA-DATA5
37  CA-DATA6
38  CA-DATA7
39  CA-CHS15
---------------------------------------------
```

```
*****************************************************************************************************************************
*   WILLI STUDER AG   *   L O C A T I O N   P I N   L I S T          * 89/07/20 *  8:15 *  P A G E 119  *
*****************************************************************************************************************************
*                         * TAPE TRANSPORT & AUDIO MCH *                * 89/04/19 - 00                                    *
*****************************************************************************************************************************
ASY  4                    AUDIO ELECTRONICS, CH 09 TO 16                                  <--  <--  <--  CONTINUATION

GRP  2        1.820.703.00
            <--  <--  <--  CONTINUATION
=======================================

ELM 16        1.820.715.00
    LINE AMPLIFIER, CH16                    J16
---------------------------------------
PNT SIGNAL NAME  COLOR LV TYPE          F
---------------------------------------
 1  MONIT-16
 2  + 0.0
 3  LOUFA-16
 4  LOUFB-16
 5  + 0.0
 6  INPDI-16
 7  INPAD-16
 8  RECIN-16
 9  + 0.0
10  TAPAD-16
11  TAPMS-16
12  TAPDI-16
13  + 0.0
14  LINFA-16
15  LINFB-16
16  CA-EQL16
17  CA-SYN16
18  CA-LSO16
19  KEY
20  TA-ACT16
21  + 0.0
22  +15.0
23  -15.0
24  + 5.6
25  TA-C307K
26  CA-SAF16
27  CA-ADR-R
28  CA-ADR-S
29  CA-ADR-T
30  CA-ADR-U
31  CA-DATA0
32  CA-DATA1
33  CA-DATA2
34  CA-DATA3
35  CA-DATA4
36  CA-DATA5
37  CA-DATA6
38  CA-DATA7
39  CA-CHS16
---------------------------------------
                                  ./.

GRP  2        1.820.703.00
            <--  <--  <--  CONTINUATION
=======================================

ELM 17        1.820.815.00
    CONTROLLER INTERNAL NRS CH16            J17
---------------------------------------
PNT SIGNAL NAME  COLOR LV TYPE          F
---------------------------------------
 1A DLBIN-16
 1B + 0.0
 2A + 0.0
 2B DLBGN-16
 3A + 0.0
 3B + 0.0
 4A DLBOA-16
 4B + 0.0
 5A + 0.0
 5B DLBOB-16
 6A + 0.0
 6B + 0.0
 7A CD-ACT16
 7B CD-REP16
 8A CD-REC16
 8B CD-CAL16
 9A + 0.0
 9B + 0.0
10A MONIT-16
10B CA-TC-16
11A INPDI-16
11B INPAD-16
12A RECIN-16
12B
13A + 0.0
13B + 0.0
14A TAPAD-16
14B TAPDI-16
15A +15.0
15B +15.0
16A + 5.6
16B + 5.6
17A + 0.0
17B + 0.0
18A -15.0
18B -15.0
19A TONGEN
19B SGNGND
20A REFLEV
20B + 0.0
21A TA-C307K
21B CA-SAF16
22A TA-CMP16
22B CA-SAF-D
23A + 0.0
23B CA-LSW16
24A CA-LSO16

GRP  2        1.820.703.00
            <--  <--  <--  CONTINUATION
=======================================

ELM 17        1.820.815.00
            <--  <--  <--  CONTINUATION
---------------------------------------
PNT SIGNAL NAME  COLOR LV TYPE          F
---------------------------------------
24B
25A CA-ADR-R
25B CA-ADR-S
26A CA-ADR-T
26B CA-ADR-U
27A CA-DATA0
27B CA-DATA1
28A CA-DATA2
28B CA-DATA3
29A CA-DATA4
29B CA-DATA5
30A CA-DATA6
30B CA-DATA7
31A + 0.0
31B + 0.0
32A CA-CHS16
32B + 0.0
---------------------------------------
                                  ./.
```

```
*****************************************************************************************************************************
*   WILLI STUDER AG   *   L O C A T I O N   P I N   L I S T          * 89/07/20 *  8:15 *  P A G E 120  *
*****************************************************************************************************************************
*                         * TAPE TRANSPORT & AUDIO MCH *                * 89/04/19 - 00                                    *
*****************************************************************************************************************************
ASY  4                    AUDIO ELECTRONICS, CH 09 TO 16                                  <--  <--  <--  CONTINUATION

GRP  2        1.820.703.00
            <--  <--  <--  CONTINUATION
=======================================

ELM 18        1.820.710.00
    REPRODUCE AMPLIFIER, CH16               J18
---------------------------------------
PNT SIGNAL NAME  COLOR LV TYPE          F
---------------------------------------
 1  TAPLI-16
 2  EQUAL-16
 3  SYPRE-16
 4  K-REC-16
 5  + 0.0
 6  REPRE-16
 7  REPRO-16
 8  + 0.0
 9  CA-TC-16
10  TAPDI-16
11  + 0.0
12  SYNHL-16
13  SYNHH-16
14  + 0.0
15  CA-EQL16
16  CA-SYN16
17  CA-LSW16
18  + 0.0
19  KEY
20  TA-ACT16
21  + 0.0
22  +15.0
23  -15.0
24  + 5.6
25  TA-C307K
26  CA-SAF16
27  CA-ADR-R
28  CA-ADR-S
29  CA-ADR-T
30  CA-ADR-U
31  CA-DATA0
32  CA-DATA1
33  CA-DATA2
34  CA-DATA3
35  CA-DATA4
36  CA-DATA5
37  CA-DATA6
38  CA-DATA7
39  CA-CHS16
---------------------------------------

GRP  2        1.820.703.00
            <--  <--  <--  CONTINUATION
=======================================

ELM 19        1.820.811.00
    RECORD AMPLIFIER, CH16                  J19
---------------------------------------
PNT SIGNAL NAME  COLOR LV TYPE          F
---------------------------------------
 1  RECIN-16
 2  EQUAL-16
 3  BIAFB-16
 4  K-REC-16
 5  + 0.0
 6  BIASA-16
 7  BIASB-16
 8  BIASC-16
 9  RECHL-16
10  RECHH-16
11  + 0.0
12  SYNHL-16
13  SYNHH-16
14  + 0.0
15  AFCSW-16
16  + 0.0
17  CA-BAD16
18  CA-RSW16
19  KEY
20  TA-ACT16
21  + 0.0
22  +15.0
23  -15.0
24  + 5.6
25  TA-C307K
26  CA-SAF16
27  CA-ADR-R
28  CA-ADR-S
29  CA-ADR-T
30  CA-ADR-U
31  CA-DATA0
32  CA-DATA1
33  CA-DATA2
34  CA-DATA3
35  CA-DATA4
36  CA-DATA5
37  CA-DATA6
38  CA-DATA7
39  CA-CHS16
---------------------------------------

GRP  2        1.820.703.00
            <--  <--  <--  CONTINUATION
=======================================

ELM 20        1.820.813.00
    HF-DRIVER, CH16                         J20
---------------------------------------
PNT SIGNAL NAME  COLOR LV TYPE          F
---------------------------------------
 1  BIAFB-16
 2  K-REC-16
 3  + 0.0
 4  + 0.0
 5  BIASA-16
 6  BIASB-16
 7  BIASC-16
 8
 9  ERACS-16
10  AFCSW-16
11  + 0.0
12  ERAHL-16
13  ERAHM-16
14  ERAHH-16
15  ERAHO-16
16  + 0.0
17  CA-BAD16
18  CA-RSW16
19  KEY
20  TA-ACT16
21  + 0.0
22  +15.0
23  -15.0
24  + 5.6
25  TA-C307K
26  CA-SAF16
27  CA-ADR-R
28  CA-ADR-S
29  CA-ADR-T
30  CA-ADR-U
31  CA-DATA0
32  CA-DATA1
33  CA-DATA2
34  CA-DATA3
35  CA-DATA4
36  CA-DATA5
37  CA-DATA6
38  CA-DATA7
39  CA-CHS16
---------------------------------------
```

```
*****************************************************************************************************************************
*    WILLI STUDER AG   *    L O C A T I O N     P I N     L I S T          *  89/07/20  *   8:15  *   P A G E 121    *
*****************************************************************************************************************************
*                          * TAPE TRANSPORT & AUDIO MCH *                   *  89/04/19 - 00                            *
*****************************************************************************************************************************
ASY  4                     AUDIO ELECTRONICS, CH 09 TO 16                                  <--  <--  <--  CONTINUATION

GRP  2        1.820.703.00
            <--  <--  <--  CONTINUATION
=====================================

ELM 21        1.820.717.00
    BUS CONVERTER                                  J21
-------------------------------------
PNT SIGNAL NAME  COLOR LV TYPE          F
-------------------------------------
 1A TA-CLPCD
 1B TA-CLMCD
 2A T-AOP-CD
 2B T-AON-CD
 3A S-A1P-D
 3B S-A1N-CD
 4A T-RWP-CD
 4B T-RWN-CD
 5A T-SL-CD
 5B
 6A T-DT0-CD
 6B T-DT1-CD
 7A T-DT2-CD
 7B T-DT3-CD
 8A T-DT4-CD
 8B T-DT5-CD
 9A T-DT6-CD
 9B T-DT7-CD
10A TA-CMP13
10B TA-CMP14
11A TA-CMP15
11B TA-CMP16
12A TA-ACT13
12B TA-ACT14
13A TA-ACT15
13B TA-ACT16
14A
14B
15A +15.0
15B +15.0
16A + 5.6
16B + 5.6
17A + 0.0
17B + 0.0
18A -15.0
18B -15.0
19A TA-C307K
19B
20A CA-SAF-D
20B
21A CA-ADR-R
21B CA-ADR-S
22A CA-ADR-T
22B CA-ADR-U
23A CA-DATA0
23B CA-DATA1
24A CA-DATA2

GRP  2        1.820.703.00
            <--  <--  <--  CONTINUATION
=====================================

ELM 21        1.820.717.00
            <--  <--  <--  CONTINUATION
-------------------------------------
PNT SIGNAL NAME  COLOR LV TYPE          F
-------------------------------------
24B CA-DATA3
25A CA-DATA4
25B CA-DATA5
26A CA-DATA6
26B CA-DATA7
27A + 0.0
27B + 0.0
28A CA-CHS13
28B CA-CHS14
29A CA-CHS15
29B CA-CHS16
30A + 0.0
30B + 0.0
31A
31B
32A
32B
-------------------------------------

ELM 31
    LINE INPUT/OUTPUT, CH13                    J22
-------------------------------------
PNT SIGNAL NAME  COLOR LV TYPE          F
-------------------------------------
 1  LOUFA-13
 2  LOUFB-13
 3  KEY
 4  + 0.0
 5  LINFA-13
 6  LINFB-13
 7  + 0.0
-------------------------------------
                                                                                  ./.

GRP  2        1.820.703.00
            <--  <--  <--  CONTINUATION
=====================================

ELM 32
    NOISE REDUCTION, CH13                      J23
-------------------------------------
PNT SIGNAL NAME  COLOR LV TYPE          F
-------------------------------------
 1  CD-CAL13
 2  CD-REC13
 3  CD-REP13
 4  CD-ACT13
 5  KEY
 6  + 0.0
 7  DLB0B-13
 8  + 0.0
 9  DLB0A-13
10  + 0.0
11  DLBGN-13
12  + 0.0
13  DLBIN-13
-------------------------------------

ELM 33
    REPRODUCE PREAMPLIFIER, CH13               J24
-------------------------------------
PNT SIGNAL NAME  COLOR LV TYPE          F
-------------------------------------
 1  REPRE-13
 2  REPRO-13
 3  KEY
 4  + 0.0
-------------------------------------

ELM 34
    RECORD HEAD, CH13                          J25
-------------------------------------
PNT SIGNAL NAME  COLOR LV TYPE          F
-------------------------------------
 1  RECHL-13
 2  RECHH-13
 3  KEY
 4  + 0.0
-------------------------------------

ELM 35
    ERASE HEAD, CH13                           J26
-------------------------------------
PNT SIGNAL NAME  COLOR LV TYPE          F
-------------------------------------
 1  ERAHL-13
 2  ERAHH-13
 3  KEY
 4  ERAHO-13
-------------------------------------

*****************************************************************************************************************************
*    WILLI STUDER AG   *    L O C A T I O N     P I N     L I S T          *  89/07/20  *   8:15  *   P A G E 122    *
*****************************************************************************************************************************
*                          * TAPE TRANSPORT & AUDIO MCH *                   *  89/04/19 - 00                            *
*****************************************************************************************************************************
ASY  4                     AUDIO ELECTRONICS, CH 09 TO 16                                  <--  <--  <--  CONTINUATION

GRP  2        1.820.703.00
            <--  <--  <--  CONTINUATION
=====================================

ELM 36
    LINE INPUT/OUTPUT, CH14                    J27
-------------------------------------
PNT SIGNAL NAME  COLOR LV TYPE          F
-------------------------------------
 1  LOUFA-14
 2  LOUFB-14
 3  KEY
 4  + 0.0
 5  LINFA-14
 6  LINFB-14
 7  + 0.0
-------------------------------------

ELM 37
    NOISE REDUCTION, CH14                      J28
-------------------------------------
PNT SIGNAL NAME  COLOR LV TYPE          F
-------------------------------------
 1  CD-CAL14
 2  CD-REC14
 3  CD-REP14
 4  CD-ACT14
 5  KEY
 6  + 0.0
 7  DLB0B-14
 8  + 0.0
 9  DLB0A-14
10  + 0.0
11  DLBGN-14
12  + 0.0
13  DLBIN-14
-------------------------------------

ELM 38
    REPRODUCE PREAMPLIFIER, CH14               J29
-------------------------------------
PNT SIGNAL NAME  COLOR LV TYPE          F
-------------------------------------
 1  REPRE-14
 2  REPRO-14
 3  KEY
 4  + 0.0
-------------------------------------
                                                                                  ./.

GRP  2        1.820.703.00
            <--  <--  <--  CONTINUATION
=====================================

ELM 39
    RECORD HEAD, CH14                          J30
-------------------------------------
PNT SIGNAL NAME  COLOR LV TYPE          F
-------------------------------------
 1  RECHL-14
 2  RECHH-14
 3  KEY
 4  + 0.0
-------------------------------------

ELM 40
    ERASE HEAD, CH14                           J31
-------------------------------------
PNT SIGNAL NAME  COLOR LV TYPE          F
-------------------------------------
 1  ERAHL-14
 2  ERAHH-14
 3  KEY
 4  ERAHO-14
-------------------------------------

ELM 41
    LINE INPUT/OUTPUT, CH15                    J32
-------------------------------------
PNT SIGNAL NAME  COLOR LV TYPE          F
-------------------------------------
 1  LOUFA-15
 2  LOUFB-15
 3  KEY
 4  + 0.0
 5  LINFA-15
 6  LINFB-15
 7  + 0.0
-------------------------------------
                                                                                  ./.

GRP  2        1.820.703.00
            <--  <--  <--  CONTINUATION
=====================================

ELM 42
    NOISE REDUCTION, CH15                      J33
-------------------------------------
PNT SIGNAL NAME  COLOR LV TYPE          F
-------------------------------------
 1  CD-CAL15
 2  CD-REC15
 3  CD-REP15
 4  CD-ACT15
 5  KEY
 6  + 0.0
 7  DLB0B-15
 8  + 0.0
 9  DLB0A-15
10  + 0.0
11  DLBGN-15
12  + 0.0
13  DLBIN-15
-------------------------------------

ELM 43
    REPRODUCE PREAMPLIFIER, CH15               J34
-------------------------------------
PNT SIGNAL NAME  COLOR LV TYPE          F
-------------------------------------
 1  REPRE-15
 2  REPRO-15
 3  KEY
 4  + 0.0
-------------------------------------

ELM 44
    RECORD HEAD, CH15                          J35
-------------------------------------
PNT SIGNAL NAME  COLOR LV TYPE          F
-------------------------------------
 1  RECHL-15
 2  RECHH-15
 3  KEY
 4  + 0.0
-------------------------------------

ELM 45
    ERASE HEAD, CH15                           J36
-------------------------------------
PNT SIGNAL NAME  COLOR LV TYPE          F
-------------------------------------
 1  ERAHL-15
 2  ERAHH-15
 3  KEY
 4  ERAHO-15
-------------------------------------
```

```
*****************************************************************************************************************************
*   WILLI STUDER AG   *   L O C A T I O N   P I N   L I S T          * 89/07/20 *  8:15 *  P A G E 123  *
*****************************************************************************************************************************
*                          * TAPE TRANSPORT & AUDIO MCH *                * 89/04/19 - 00                                    *
*****************************************************************************************************************************
ASY  4                        AUDIO ELECTRONICS, CH 09 TO 16                                  <--  <--  <--  CONTINUATION
```

GRP 2 1.820.703.00 <-- <-- <-- CONTINUATION

ELM 46
LINE INPUT/OUTPUT, CH16 J37

PNT	SIGNAL NAME	COLOR	LV	TYPE	F
1	LOUFA-16				
2	LOUFB-16				
3	KEY				
4	+ 0.0				
5	LINFA-16				
6	LINFB-16				
7	+ 0.0				

ELM 47
NOISE REDUCTION, CH16 J38

PNT	SIGNAL NAME	COLOR	LV	TYPE	F
1	CD-CAL16				
2	CD-REC16				
3	CD-REP16				
4	CD-ACT16				
5	KEY				
6	+ 0.0				
7	DLBOB-16				
8	+ 0.0				
9	DLBOA-16				
10	+ 0.0				
11	DLBGN-16				
12	+ 0.0				
13	DLBIN-16				

ELM 48
REPRODUCE PREAMPLIFIER, CH16 J39

PNT	SIGNAL NAME	COLOR	LV	TYPE	F
1	REPRF-16				
2	REPRO-16				
3	KEY				
4	+ 0.0				

./.

GRP 2 1.820.703.00 <-- <-- <-- CONTINUATION

ELM 49
RECORD HEAD, CH16 J40

PNT	SIGNAL NAME	COLOR	LV	TYPE	F
1	RECHL-16				
2	RECHH-16				
3	KEY				
4	+ 0.0				

ELM 50
ERASE HEAD, CH16 J41

PNT	SIGNAL NAME	COLOR	LV	TYPE	F
1	ERAHL-16				
2	ERAHH-16				
3	KEY				
4	ERAHO-16				

ELM 60
JUMPER SWITCH JS01

PNT	SIGNAL NAME	COLOR	LV	TYPE	F
1	T-A1P-CD				
2	S-A1P-D				
3	T-A1N-CD				
4	S-A1N-D				
5	T-A1P-CD				

./.

GRP 2 1.820.703.00 <-- <-- <-- CONTINUATION

ELM 70
P01

PNT	SIGNAL NAME	COLOR	LV	TYPE	F
1	+ 0.0				
2	+ 0.0				
3	+ 5.6				
4	+ 5.6				
5	+15.0				
6	-15.0				
7	TONGEN				
8	SGNGND				
9	REFLEV				
10	+ 0.0				
11	TA-CLPCD				
12	TA-CLMCD				
13	+ 0.0				
14	T-A0P-CD				
15	T-A0N-CD				
16	+ 0.0				
17	T-A1P-CD				
18	T-A1N-CD				
19	+ 0.0				
20	T-RWP-CD				
21	T-RWN-CD				
22	+ 0.0				
23	T-SL-CD				
24	+ 0.0				
25	T-DT0-CD				
26	+ 0.0				
27	T-DT1-CD				
28	+ 0.0				
29	T-DT2-CD				
30	+ 0.0				
31	T-DT3-CD				
32	+ 0.0				
33	T-DT4-CD				
34	+ 0.0				
35	T-DT5-CD				
36	+ 0.0				
37	T-DT6-CD				
38	+ 0.0				
39	T-DT7-CD				
40	+ 0.0				

```
*****************************************************************************************************************************
*   WILLI STUDER AG   *   L O C A T I O N   P I N   L I S T          * 89/07/20 *  8:15 *  P A G E 124  *
*****************************************************************************************************************************
*                          * TAPE TRANSPORT & AUDIO MCH *                * 89/04/19 - 00                                    *
*****************************************************************************************************************************
ASY  4                        AUDIO ELECTRONICS, CH 09 TO 16                                  <--  <--  <--  CONTINUATION
```

GRP 3 1.820.778.00
DISTRIBUTION BOARD AUDIO RACK

ELM 1
SUPPLY PREAMPLIFIER CH17 TO 24 J01

PNT	SIGNAL NAME	COLOR	LV	TYPE	F
1	+ 5.6				
2	GND				
3	+ 0.0				
4	+15.0				
5	-15.0				
6	KEY				

ELM 2
SUPPLY ASY04, GRP01 J02

PNT	SIGNAL NAME	COLOR	LV	TYPE	F
1	+ 5.6			BX	
2				BX	
3	+ 0.0			BX	
4	+ 0.0			BX	
5	+15.0			BX	
6	+15.0			BX	
7	-15.0			BX	
8	-15.0			BX	
9	RESERVE			BX	
10	+24.0NRS			BX	

ELM 3
SUPPLY ASY04, GRP02 J03

PNT	SIGNAL NAME	COLOR	LV	TYPE	F
1	+ 5.6			BX	
2				BX	
3	+ 0.0			BX	
4	+ 0.0			BX	
5	+15.0			BX	
6	+15.0			BX	
7	-15.0			BX	
8	-15.0			BX	
9	RESERVE			BX	
10	+24.0NRS			BX	

./.

GRP 3 1.820.778.00 <-- <-- <-- CONTINUATION

ELM 4
SUPPLY CONNECTOR J04

PNT	SIGNAL NAME	COLOR	LV	TYPE	F
1	+ 5.6			BX	
2				BX	
3	+ 0.0			BX	
4	+ 0.0			BX	
5	+15.0			BX	
6				BX	
7	-15.0			BX	
8				BX	
9	RESERVE			BX	
10	+24.0NRS			BX	

ELM 5
SUPPLY ASY04, GRP04 (NRS OPTION) J05

PNT	SIGNAL NAME	COLOR	LV	TYPE	F
1	+ 5.6			BX	
2				BX	
3	+ 0.0			BX	
4	+ 0.0			BX	
5	+15.0			BX	
6	+15.0			BX	
7	-15.0			BX	
8	-15.0			BX	
9	RESERVE			BX	
10	+24.0NRS			BX	

GRP 4 1.820.809.00
BASISBOARD, NRS OPTION CH 09 TO 16

ELM 1
NOISE REDUCTION UNIT CH 9 J01

PNT	SIGNAL NAME	COLOR	LV	TYPE	F
1					
1A					
2					
2B					
3	CD-CAL09				
3C					
4	DLBOA-09				
4D					
5	KEY				
5E	KEY				
6					
6F					
7					
7H					
8					
8J					
9					
9K					
10	DLBIN-09				
10L					
11					
11M					
12	CD-ACT09				
12N					
13					
13P					
14					
14R					
15	+24.0NRS				
15S					
16	+ 0.0				
16T	+ 0.0				

ELM 2
NOISE REDUCTION UNIT CH10 J02

PNT	SIGNAL NAME	COLOR	LV	TYPE	F

ELM 3
NOISE REDUCTION UNIT CH11 J03

PNT	SIGNAL NAME	COLOR	LV	TYPE	F

WILLI STUDER AG * L O C A T I O N P I N L I S T * 89/07/20 * 8:15 * P A G E 125 *
* TAPE TRANSPORT & AUDIO MCH * * 89/04/19 - 00 *
ASY 4 AUDIO ELECTRONICS, CH 09 TO 16 <-- <-- <-- CONTINUATION

GRP 4 1.820.809.00 <-- <-- <-- CONTINUATION

ELM 4
NOISE REDUCTION UNIT CH12 J04

PNT	SIGNAL NAME	COLOR LV TYPE	F

ELM 5
NOISE REDUCTION UNIT CH13 J05

PNT	SIGNAL NAME	COLOR LV TYPE	F

ELM 6
NOISE REDUCTION UNIT CH14 J06

PNT	SIGNAL NAME	COLOR LV TYPE	F

ELM 7
NOISE REDUCTION UNIT CH15 J07

PNT	SIGNAL NAME	COLOR LV TYPE	F

ELM 8
NOISE REDUCTION UNIT CH16 J08

PNT	SIGNAL NAME	COLOR LV TYPE	F

./.

GRP 4 1.820.809.00 <-- <-- <-- CONTINUATION

ELM 11
TO GRP01, ELM32 (AUDIO BASIS B.) P01

PNT	SIGNAL NAME	COLOR LV TYPE	F
1	CD-CAL09	D	
2	CD-REC09	D	
3	CD-REP09	D	
4	CD-ACT09	D	
5	KEY		
6	+ 0.0	D	
7	DLBOB-09	D	
8	+ 0.0	D	
9	DLBOA-09	D	
10	+ 0.0	D	
11	DLBGN-09	D	
12	+ 0.0	D	
13	DLBIN-09	D	

ELM 12
TO GRP01, ELM37 (AUDIO BASIS B.) P02

PNT	SIGNAL NAME	COLOR LV TYPE	F
1	CD-CAL10	D	
2	CD-REC10	D	
3	CD-REP10	D	
4	CD-ACT10	D	
5	KEY		
6	+ 0.0	D	
7	DLBOB-10	D	
8	+ 0.0	D	
9	DLBOA-10	D	
10	+ 0.0	D	
11	DLBGN-10	D	
12	+ 0.0	D	
13	DLBIN-10	D	

GRP 4 1.820.809.00 <-- <-- <-- CONTINUATION

ELM 13
TO GRP01, ELM42 (AUDIO BASIS B.) P03

PNT	SIGNAL NAME	COLOR LV TYPE	F
1	CD-CAL11	D	
2	CD-REC11	D	
3	CD-REP11	D	
4	CD-ACT11	D	
5	KEY		
6	+ 0.0	D	
7	DLBOB-11	D	
8	+ 0.0	D	
9	DLBOA-11	D	
10	+ 0.0	D	
11	DLBGN-11	D	
12	+ 0.0	D	
13	DLBIN-11	D	

ELM 14
TO GRP01, ELM47 (AUDIO BASIS B.) P04

PNT	SIGNAL NAME	COLOR LV TYPE	F
1	CD-CAL12	D	
2	CD-REC12	D	
3	CD-REP12	D	
4	CD-ACT12	D	
5	KEY		
6	+ 0.0	D	
7	DLBOB-12	D	
8	+ 0.0	D	
9	DLBOA-12	D	
10	+ 0.0	D	
11	DLBGN-12	D	
12	+ 0.0	D	
13	DLBIN-12	D	

WILLI STUDER AG * L O C A T I O N P I N L I S T * 89/07/20 * 8:15 * P A G E 126 *
* TAPE TRANSPORT & AUDIO MCH * * 89/04/19 - 00 *
ASY 4 AUDIO ELECTRONICS, CH 09 TO 16 <-- <-- <-- CONTINUATION

GRP 4 1.820.809.00 <-- <-- <-- CONTINUATION

ELM 15
TO GRP02, ELM32 (AUDIO BASIS B.) P05

PNT	SIGNAL NAME	COLOR LV TYPE	F
1	CD-CAL13	D	
2	CD-REC13	D	
3	CD-REP13	D	
4	CD-ACT13	D	
5	KEY		
6	+ 0.0	D	
7	DLBOB-13	D	
8	+ 0.0	D	
9	DLBOA-13	D	
10	+ 0.0	D	
11	DLBGN-13	D	
12	+ 0.0	D	
13	DLBIN-13	D	

ELM 16
TO GRP02, ELM37 (AUDIO BASIS B.) P06

PNT	SIGNAL NAME	COLOR LV TYPE	F
1	CD-CAL14	D	
2	CD-REC14	D	
3	CD-REP14	D	
4	CD-ACT14	D	
5	KEY		
6	+ 0.0	D	
7	DLBOB-14	D	
8	+ 0.0	D	
9	DLBOA-14	D	
10	+ 0.0	D	
11	DLBGN-14	D	
12	+ 0.0	D	
13	DLBIN-14	D	

GRP 4 1.820.809.00 <-- <-- <-- CONTINUATION

ELM 17
TO GRP02, ELM42 (AUDIO BASIS B.) P07

PNT	SIGNAL NAME	COLOR LV TYPE	F
1	CD-CAL15	D	
2	CD-REC15	D	
3	CD-REP15	D	
4	CD-ACT15	D	
5	KEY		
6	+ 0.0	D	
7	DLBOB-15	D	
8	+ 0.0	D	
9	DLBOA-15	D	
10	+ 0.0	D	
11	DLBGN-15	D	
12	+ 0.0	D	
13	DLBIN-15	D	

ELM 18
TO GRP02, ELM47 (AUDIO BASIS B.) P08

PNT	SIGNAL NAME	COLOR LV TYPE	F
1	CD-CAL16	D	
2	CD-REC16	D	
3	CD-REP16	D	
4	CD-ACT16	D	
5	KEY		
6	+ 0.0	D	
7	DLBOB-16	D	
8	+ 0.0	D	
9	DLBOA-16	D	
10	+ 0.0	D	
11	DLBGN-16	D	
12	+ 0.0	D	
13	DLBIN-16	D	

GRP 4 1.820.809.00 <-- <-- <-- CONTINUATION

ELM 19
FROM GRP03, ELM05 (DISTR. B) P09

PNT	SIGNAL NAME	COLOR LV TYPE	F
1	+ 5.6	AX	
2		AX	
3	+ 0.0	AX	
4	+ 0.0	AX	
5	+15.0	AX	
6	+15.0	AX	
7	-15.0	AX	
8	-15.0	AX	
9	RESERVE	AX	
10	+24.0NRS	AX	

```
*    WILLI STUDER AG    *    L O C A T I O N    P I N    L I S T          * 89/07/20 *   8:15  *  P A G E 127   *
*                                * TAPE TRANSPORT & AUDIO MCH *                                * 89/04/19 - 00                *
ASY  4                          AUDIO ELECTRONICS, CH 09 TO 16                                                <--  <--  <--  CONTINUATION

GRP 11         1.820.863.00
    LINE INPUTS, CH 09 TO 16
=======================================

ELM  1
    LINE INPUT, CH 9                    XLR J01
---------------------------------------
PNT SIGNAL NAME   COLOR LV TYPE           F
---------------------------------------
 1  + 0.0
 2  LINSA-09
 3  LINSB-09
---------------------------------------

ELM  2
    LINE INPUT, CH10                    XLR J02
---------------------------------------
PNT SIGNAL NAME   COLOR LV TYPE           F
---------------------------------------
 1  + 0.0
 2  LINSA-10
 3  LINSB-10
---------------------------------------

ELM  3
    LINE INPUT, CH11                    XLR J03
---------------------------------------
PNT SIGNAL NAME   COLOR LV TYPE           F
---------------------------------------
 1  + 0.0
 2  LINSA-11
 3  LINSB-11
---------------------------------------

ELM  4
    LINE INPUT, CH12                    XLR J04
---------------------------------------
PNT SIGNAL NAME   COLOR LV TYPE           F
---------------------------------------
 1  + 0.0
 2  LINSA-12
 3  LINSB-12
---------------------------------------

ELM  5
    LINE INPUT, CH13                    XLR J05
---------------------------------------
PNT SIGNAL NAME   COLOR LV TYPE           F
---------------------------------------
 1  + 0.0
 2  LINSA-13
 3  LINSB-13
---------------------------------------

GRP 11         1.820.863.00
                          <--  <--  <--  CONTINUATION
=======================================

ELM  6
    LINE INPUT, CH14                    XLR J06
---------------------------------------
PNT SIGNAL NAME   COLOR LV TYPE           F
---------------------------------------
 1  + 0.0
 2  LINSA-14
 3  LINSB-14
---------------------------------------

ELM  7
    LINE INPUT, CH15                    XLR J07
---------------------------------------
PNT SIGNAL NAME   COLOR LV TYPE           F
---------------------------------------
 1  + 0.0
 2  LINSA-15
 3  LINSB-15
---------------------------------------

ELM  8
    LINE INPUT, CH16                    XLR J08
---------------------------------------
PNT SIGNAL NAME   COLOR LV TYPE           F
---------------------------------------
 1  + 0.0
 2  LINSA-16
 3  LINSB-16
---------------------------------------
                                        ./.

GRP 11         1.820.863.00
                          <--  <--  <--  CONTINUATION
=======================================

ELM  9
    LINE INPUTS, CH 9 TO 16             P01
---------------------------------------
PNT SIGNAL NAME   COLOR LV TYPE           F
---------------------------------------
 1  LINFA-16
 2  + 0.0
 3  LINFA-15
 4  LINFA-14
 5  + 0.0
 6  LINFA-13
 7  LINFA-12
 8  + 0.0
 9  LINFA-11
10  LINFA-10
11  + 0.0
12  LINFA-09
13  + 0.0
14  LINFB-16
15  + 0.0
16  LINFB-15
17  LINFB-14
18  + 0.0
19  LINFB-13
20  LINFB-12
21  + 0.0
22  LINFB-11
23  LINFB-10
24  + 0.0
25  LINFB-09
---------------------------------------
```

```
*    WILLI STUDER AG    *    L O C A T I O N    P I N    L I S T          * 89/07/20 *   8:15  *  P A G E 128   *
*                                * TAPE TRANSPORT & AUDIO MCH *                                * 89/04/19 - 00                *
ASY  4                          AUDIO ELECTRONICS, CH 09 TO 16                                                <--  <--  <--  CONTINUATION

GRP 14         1.820.864.00
    LINE OUTPUTS, CH 09 TO 16
=======================================

ELM  1
    LINE OUTPUT, CH 9                   XLR P01
---------------------------------------
PNT SIGNAL NAME   COLOR LV TYPE           F
---------------------------------------
 1  + 0.0
 2  LOUSA-09
 3  LOUSB-09
---------------------------------------

ELM  2
    LINE OUTPUT, CH10                   XLR P02
---------------------------------------
PNT SIGNAL NAME   COLOR LV TYPE           F
---------------------------------------
 1  + 0.0
 2  LOUSA-10
 3  LOUSB-10
---------------------------------------

ELM  3
    LINE OUTPUT, CH11                   XLR P03
---------------------------------------
PNT SIGNAL NAME   COLOR LV TYPE           F
---------------------------------------
 1  + 0.0
 2  LOUSA-11
 3  LOUSB-11
---------------------------------------

ELM  4
    LINE OUTPUT, CH12                   XLR P04
---------------------------------------
PNT SIGNAL NAME   COLOR LV TYPE           F
---------------------------------------
 1  + 0.0
 2  LOUSA-12
 3  LOUSB-12
---------------------------------------

ELM  5
    LINE OUTPUT, CH13                   XLR P05
---------------------------------------
PNT SIGNAL NAME   COLOR LV TYPE           F
---------------------------------------
 1  + 0.0
 2  LOUSA-13
 3  LOUSB-13
---------------------------------------

GRP 14         1.820.864.00
                          <--  <--  <--  CONTINUATION
=======================================

ELM  6
    LINE OUTPUT, CH14                   XLR P06
---------------------------------------
PNT SIGNAL NAME   COLOR LV TYPE           F
---------------------------------------
 1  + 0.0
 2  LOUSA-14
 3  LOUSB-14
---------------------------------------

ELM  7
    LINE OUTPUT, CH15                   XLR P07
---------------------------------------
PNT SIGNAL NAME   COLOR LV TYPE           F
---------------------------------------
 1  + 0.0
 2  LOUSA-15
 3  LOUSB-15
---------------------------------------

ELM  8
    LINE OUTPUT, CH16                   XLR P08
---------------------------------------
PNT SIGNAL NAME   COLOR LV TYPE           F
---------------------------------------
 1  + 0.0
 2  LOUSA-16
 3  LOUSB-16
---------------------------------------
                                        ./.

GRP 14         1.820.864.00
                          <--  <--  <--  CONTINUATION
=======================================

ELM  9
    LINE OUTPUTS, CH 9 TO 16            P09
---------------------------------------
PNT SIGNAL NAME   COLOR LV TYPE           F
---------------------------------------
 1  LOUFA-16
 2  + 0.0
 3  LOUFA-15
 4  LOUFA-14
 5  + 0.0
 6  LOUFA-13
 7  LOUFA-12
 8  + 0.0
 9  LOUFA-11
10  LOUFA-10
11  + 0.0
12  LOUFA-09
13  + 0.0
14  LOUFB-16
15  + 0.0
16  LOUFB-15
17  LOUFB-14
18  + 0.0
19  LOUFB-13
20  LOUFB-12
21  + 0.0
22  LOUFB-11
23  LOUFB-10
24  + 0.0
25  LOUFB-09
---------------------------------------
```

```
*****************************************************************************************************************************
*    WILLI STUDER AG    *    L O C A T I O N     P I N     L I S T                *  89/07/20  *   8:15  *   P A G E 129   *
*****************************************************************************************************************************
*                                * TAPE TRANSPORT & AUDIO MCH *                    *  89/04/19 - 00                          *
*****************************************************************************************************************************
ASY  5                          AUDIO ELECTRONICS, CH 17 TO 24

GRP  1         1.820.703.00                  GRP  1         1.820.703.00                  GRP  1         1.820.703.00
     BASISBOARD, CH 17 TO 20                             <--  <--  <--  CONTINUATION                <--  <--  <--  CONTINUATION
=======================================    =======================================    =======================================

ELM  1         1.820.715.00                ELM  2         1.820.815.00                ELM  2         1.820.815.00
     LINE AMPLIFIER, CH17          J01          CONTROLLER INTERNAL NRS CH17     J02          <--  <--  <--  CONTINUATION
---------------------------------------    ---------------------------------------    ---------------------------------------
PNT SIGNAL NAME  COLOR LV TYPE        F    PNT SIGNAL NAME  COLOR LV TYPE        F    PNT SIGNAL NAME  COLOR LV TYPE        F
---------------------------------------    ---------------------------------------    ---------------------------------------
 1  MONIT-17                               1A DLBIN-17                               24B
 2  + 0.0                                  1B + 0.0                                  25A CA-ADR-R
 3  LOUFA-17                               2A + 0.0                                  25B CA-ADR-S
 4  LOUFB-17                               2B DLBGN-17                               26A CA-ADR-T
 5  + 0.0                                  3A + 0.0                                  26B CA-ADR-U
 6  INPDI-17                               3B + 0.0                                  27A CA-DATA0
 7  INPAD-17                               4A DLBOA-17                               27B CA-DATA1
 8  RECIN-17                               4B + 0.0                                  28A CA-DATA2
 9  + 0.0                                  5A + 0.0                                  28B CA-DATA3
10  TAPAD-17                               5B DLBOB-17                               29A CA-DATA4
11  TAPMS-17                               6A + 0.0                                  29B CA-DATA5
12  TAPDI-17                               6B + 0.0                                  30A CA-DATA6
13  + 0.0                                  7A CD-ACT17                               30B CA-DATA7
14  LINFA-17                               7B CD-REP17                               31A + 0.0
15  LINFB-17                               8A CD-REC17                               31B + 0.0
16  CA-EQL17                               8B CD-CAL17                               32A CA-CHS17
17  CA-SYN17                               9A + 0.0                                  32B + 0.0
18  CA-LSO17                               9B + 0.0                                  ---------------------------------------
19  KEY                                   10A MONIT-17                                                                  ./.
20  TA-ACT17                              10B CA-TC-17
21  + 0.0                                 11A INPDI-17
22  +15.0                                 11B INPAD-17
23  -15.0                                 12A RECIN-17
24  + 5.6                                 12B
25  TA-C307K                              13A + 0.0
26  CA-SAF17                              13B + 0.0
27  CA-ADR-R                              14A TAPAD-17
28  CA-ADR-S                              14B TAPDI-17
29  CA-ADR-T                              15A +15.0
30  CA-ADR-U                              15B +15.0
31  CA-DATA0                              16A + 5.6
32  CA-DATA1                              16B + 5.6
33  CA-DATA2                              17A + 0.0
34  CA-DATA3                              17B + 0.0
35  CA-DATA4                              18A -15.0
36  CA-DATA5                              18B -15.0
37  CA-DATA6                              19A TONGEN
38  CA-DATA7                              19B SGNGND
39  CA-CHS17                              20A REFLEV
---------------------------------------   20B + 0.0
                                  ./.     21A TA-C307K
                                          21B CA-SAF17
                                          22A TA-CMP17
                                          22B CA-SAF-E
                                          23A + 0.0
                                          23B CA-LSW17
                                          24A CA-LSO17
```

```
*****************************************************************************************************************************
*    WILLI STUDER AG    *    L O C A T I O N     P I N     L I S T                *  89/07/20  *   8:15  *   P A G E 130   *
*****************************************************************************************************************************
*                                * TAPE TRANSPORT & AUDIO MCH *                    *  89/04/19 - 00                          *
*****************************************************************************************************************************
ASY  5                          AUDIO ELECTRONICS, CH 17 TO 24                                          <--  <--  <--  CONTINUATION

GRP  1         1.820.703.00                  GRP  1         1.820.703.00                  GRP  1         1.820.703.00
          <--  <--  <--  CONTINUATION                <--  <--  <--  CONTINUATION                <--  <--  <--  CONTINUATION
=======================================    =======================================    =======================================

ELM  3         1.820.710.00                ELM  4         1.820.811.00                ELM  5         1.820.813.00
     REPRODUCE AMPLIFIER, CH17     J03          RECORD AMPLIFIER, CH17           J04          HF-DRIVER, CH17               J05
---------------------------------------    ---------------------------------------    ---------------------------------------
PNT SIGNAL NAME  COLOR LV TYPE        F    PNT SIGNAL NAME  COLOR LV TYPE        F    PNT SIGNAL NAME  COLOR LV TYPE        F
---------------------------------------    ---------------------------------------    ---------------------------------------
 1  TAPLI-17                               1  RECIN-17                                1  BIAFB-17
 2  EQUAL-17                               2  EQUAL-17                                2  K-REC-17
 3  SYPRE-17                               3  BIAFB-17                                3  + 0.0
 4  K-REC-17                               4  K-REC-17                                4  + 0.0
 5  + 0.0                                  5  + 0.0                                   5  BIASA-17
 6  REPRE-17                               6  BIASA-17                                6  BIASB-17
 7  REPRO-17                               7  BIASB-17                                7  BIASC-17
 8  + 0.0                                  8  BIASC-17                                8
 9  CA-TC-17                               9  RECHL-17                                9  ERACS-17
10  TAPDI-17                              10  RECHH-17                               10  AFCSW-17
11  + 0.0                                 11  + 0.0                                  11  + 0.0
12  SYNHL-17                              12  SYNHL-17                               12  ERAHL-17
13  SYNHH-17                              13  SYNHH-17                               13  ERAHM-17
14  + 0.0                                 14  + 0.0                                  14  ERAHH-17
15  CA-EQL17                              15  AFCSW-17                               15  ERAHO-17
16  CA-SYN17                              16  + 0.0                                  16  + 0.0
17  CA-LSW17                              17  CA-BAD17                               17  CA-BAD17
18  + 0.0                                 18  CA-RSW17                               18  CA-RSW17
19  KEY                                   19  KEY                                    19  KEY
20  TA-ACT17                              20  TA-ACT17                               20  TA-ACT17
21  + 0.0                                 21  + 0.0                                  21  + 0.0
22  +15.0                                 22  +15.0                                  22  +15.0
23  -15.0                                 23  -15.0                                  23  -15.0
24  + 5.6                                 24  + 5.6                                  24  + 5.6
25  TA-C307K                              25  TA-C307K                               25  TA-C307K
26  CA-SAF17                              26  CA-SAF17                               26  CA-SAF17
27  CA-ADR-R                              27  CA-ADR-R                               27  CA-ADR-R
28  CA-ADR-S                              28  CA-ADR-S                               28  CA-ADR-S
29  CA-ADR-T                              29  CA-ADR-T                               29  CA-ADR-T
30  CA-ADR-U                              30  CA-ADR-U                               30  CA-ADR-U
31  CA-DATA0                              31  CA-DATA0                               31  CA-DATA0
32  CA-DATA1                              32  CA-DATA1                               32  CA-DATA1
33  CA-DATA2                              33  CA-DATA2                               33  CA-DATA2
34  CA-DATA3                              34  CA-DATA3                               34  CA-DATA3
35  CA-DATA4                              35  CA-DATA4                               35  CA-DATA4
36  CA-DATA5                              36  CA-DATA5                               36  CA-DATA5
37  CA-DATA6                              37  CA-DATA6                               37  CA-DATA6
38  CA-DATA7                              38  CA-DATA7                               38  CA-DATA7
39  CA-CHS17                              39  CA-CHS17                               39  CA-CHS17
---------------------------------------    ---------------------------------------    ---------------------------------------
```

```
*****************************************************************************************************************************
*    WILLI STUDER AG   *    L O C A T I O N     P I N     L I S T            * 89/07/20 *   8:15  *   P A G E 131   *
*****************************************************************************************************************************
*                              * TAPE TRANSPORT & AUDIO MCH *                 * 89/04/19 - 00                             *
*****************************************************************************************************************************
ASY  5                         AUDIO ELECTRONICS, CH 17 TO 24                                    <--  <--  <--  CONTINUATION

GRP  1         1.820.703.00                GRP  1         1.820.703.00                GRP  1         1.820.703.00
             <--  <--  <--  CONTINUATION                <--  <--  <--  CONTINUATION              <--  <--  <--  CONTINUATION
=====================================    =====================================    =====================================

ELM  6         1.820.715.00              ELM  7         1.820.815.00              ELM  7         1.820.815.00
    LINE AMPLIFIER, CH18          J06        CONTROLLER INTERNAL NRS CH18   J07        CONTROLLER INTERNAL NRS CH18   J07
-------------------------------------    -------------------------------------    -------------------------------------
PNT SIGNAL NAME  COLOR LV TYPE      F    PNT SIGNAL NAME  COLOR LV TYPE      F    PNT SIGNAL NAME  COLOR LV TYPE      F
-------------------------------------    -------------------------------------    -------------------------------------
 1  MONIT-18                             1A DLBIN-18                             24B
 2  + 0.0                                1B + 0.0                                25A CA-ADR-R
 3  LOUFA-18                             2A + 0.0                                25B CA-ADR-S
 4  LOUFB-18                             2B DLBGN-18                             26A CA-ADR-T
 5  + 0.0                                3A + 0.0                                26B CA-ADR-U
 6  INPDI-18                             3B + 0.0                                27A CA-DATA0
 7  INPAD-18                             4A DLBOA-18                             27B CA-DATA1
 8  RECIN-18                             4B + 0.0                                28A CA-DATA2
 9  + 0.0                                5A + 0.0                                28B CA-DATA3
10  TAPAD-18                             5B DLBOB-18                             29A CA-DATA4
11  TAPMS-18                             6A + 0.0                                29B CA-DATA5
12  TAPDI-18                             6B + 0.0                                30A CA-DATA6
13  + 0.0                                7A CD-ACT18                             30B CA-DATA7
14  LINFA-18                             7B CD-REP18                             31A + 0.0
15  LINFB-18                             8A CD-REC18                             31B + 0.0
16  CA-EQL18                             8B CD-CAL18                             32A CA-CHS18
17  CA-SYN18                             9A + 0.0                                32B + 0.0
18  CA-LSO18                             9B + 0.0                                -------------------------------------
19  KEY                                 10A MONIT-18                                                              ./.
20  TA-ACT18                            10B CA-TC-18
21  + 0.0                               11A INPDI-18
22  +15.0                               11B INPAD-18
23  -15.0                               12A RECIN-18
24  + 5.6                               12B
25  TA-C307K                            13A + 0.0
26  CA-SAF18                            13B + 0.0
27  CA-ADR-R                            14A TAPAD-18
28  CA-ADR-S                            14B TAPDI-18
29  CA-ADR-T                            15A +15.0
30  CA-ADR-U                            15B +15.0
31  CA-DATA0                            16A + 5.6
32  CA-DATA1                            16B + 5.6
33  CA-DATA2                            17A + 0.0
34  CA-DATA3                            17B + 0.0
35  CA-DATA4                            18A -15.0
36  CA-DATA5                            18B -15.0
37  CA-DATA6                            19A TONGEN
38  CA-DATA7                            19B SGNGND
39  CA-CHS18                            20A REFLEV
-------------------------------------    20B + 0.0
                                        21A TA-C307K
                                        21B CA-SAF18
                                        22A TA-CMP18
                                        22B CA-SAF-E
                                        23A + 0.0
                                        23B CA-LSW18
                                        24A CA-LSO18
```

```
*****************************************************************************************************************************
*    WILLI STUDER AG   *    L O C A T I O N     P I N     L I S T            * 89/07/20 *   8:15  *   P A G E 132   *
*****************************************************************************************************************************
*                              * TAPE TRANSPORT & AUDIO MCH *                 * 89/04/19 - 00                             *
*****************************************************************************************************************************
ASY  5                         AUDIO ELECTRONICS, CH 17 TO 24                                    <--  <--  <--  CONTINUATION

GRP  1         1.820.703.00                GRP  1         1.820.703.00                GRP  1         1.820.703.00
             <--  <--  <--  CONTINUATION                <--  <--  <--  CONTINUATION              <--  <--  <--  CONTINUATION
=====================================    =====================================    =====================================

ELM  8         1.820.710.00              ELM  9         1.820.811.00              ELM 10         1.820.813.00
    REPRODUCE AMPLIFIER, CH18     J08        RECORD AMPLIFIER, CH18         J09        HF-DRIVER, CH18                J10
-------------------------------------    -------------------------------------    -------------------------------------
PNT SIGNAL NAME  COLOR LV TYPE      F    PNT SIGNAL NAME  COLOR LV TYPE      F    PNT SIGNAL NAME  COLOR LV TYPE      F
-------------------------------------    -------------------------------------    -------------------------------------
 1  TAPLI-18                             1  RECIN-18                              1  BIAFB-18
 2  EQUAL-18                             2  EQUAL-18                              2  K-REC-18
 3  SYPRE-18                             3  BIAFB-18                              3  + 0.0
 4  K-REC-18                             4  K-REC-18                              4  + 0.0
 5  + 0.0                                5  + 0.0                                 5  BIASA-18
 6  REPRE-18                             6  BIASA-18                              6  BIASB-18
 7  REPRO-18                             7  BIASB-18                              7  BIASC-18
 8  + 0.0                                8  BIASC-18                              8
 9  CA-TC-18                             9  RECHL-18                              9  ERACS-18
10  TAPDI-18                            10  RECHH-18                             10  AFCSW-18
11  + 0.0                               11  + 0.0                                11  + 0.0
12  SYNHL-18                            12  SYNHL-18                             12  ERAHL-18
13  SYNHH-18                            13  SYNHH-18                             13  ERAHM-18
14  + 0.0                               14  + 0.0                                14  ERAHH-18
15  CA-EQL18                            15  AFCSW-18                             15  ERAHO-18
16  CA-SYN18                            16  + 0.0                                16  + 0.0
17  CA-LSW18                            17  CA-BAD18                             17  CA-BAD18
18  + 0.0                               18  CA-RSW18                             18  CA-RSW18
19  KEY                                 19  KEY                                  19  KEY
20  TA-ACT18                            20  TA-ACT18                             20  TA-ACT18
21  + 0.0                               21  + 0.0                                21  + 0.0
22  +15.0                               22  +15.0                                22  +15.0
23  -15.0                               23  -15.0                                23  -15.0
24  + 5.6                               24  + 5.6                                24  + 5.6
25  TA-C307K                            25  TA-C307K                             25  TA-C307K
26  CA-SAF18                            26  CA-SAF18                             26  CA-SAF18
27  CA-ADR-R                            27  CA-ADR-R                             27  CA-ADR-R
28  CA-ADR-S                            28  CA-ADR-S                             28  CA-ADR-S
29  CA-ADR-T                            29  CA-ADR-T                             29  CA-ADR-T
30  CA-ADR-U                            30  CA-ADR-U                             30  CA-ADR-U
31  CA-DATA0                            31  CA-DATA0                             31  CA-DATA0
32  CA-DATA1                            32  CA-DATA1                             32  CA-DATA1
33  CA-DATA2                            33  CA-DATA2                             33  CA-DATA2
34  CA-DATA3                            34  CA-DATA3                             34  CA-DATA3
35  CA-DATA4                            35  CA-DATA4                             35  CA-DATA4
36  CA-DATA5                            36  CA-DATA5                             36  CA-DATA5
37  CA-DATA6                            37  CA-DATA6                             37  CA-DATA6
38  CA-DATA7                            38  CA-DATA7                             38  CA-DATA7
39  CA-CHS18                            39  CA-CHS18                             39  CA-CHS18
-------------------------------------    -------------------------------------    -------------------------------------
```

```
*    WILLI STUDER AG   *    L O C A T I O N     P I N     L I S T          *  89/07/20  *   8:15  *   P A G E 133   *
*                                 * TAPE TRANSPORT & AUDIO MCH *                                 *  89/04/19 - 00                 *
ASY  5                        AUDIO ELECTRONICS, CH 17 TO 24                                                <--  <--  <--  CONTINUATION

GRP  1         1.820.703.00
              <--  <--  <--  CONTINUATION
=====================================

ELM 11         1.820.715.00
    LINE AMPLIFIER, CH19                    J11
-------------------------------------------
PNT SIGNAL NAME  COLOR LV TYPE           F
-------------------------------------------
 1  MONIT-19
 2  + 0.0
 3  LOUFA-19
 4  LOUFB-19
 5  + 0.0
 6  INPDI-19
 7  INPAD-19
 8  RECIN-19
 9  + 0.0
10  TAPAD-19
11  TAPMS-19
12  TAPDI-19
13  + 0.0
14  LINFA-19
15  LINFB-19
16  CA-EQL19
17  CA-SYN19
18  CA-LSO19
19  KEY
20  TA-ACT19
21  + 0.0
22  +15.0
23  -15.0
24  + 5.6
25  TA-C307K
26  CA-SAF19
27  CA-ADR-R
28  CA-ADR-S
29  CA-ADR-T
30  CA-ADR-U
31  CA-DATA0
32  CA-DATA1
33  CA-DATA2
34  CA-DATA3
35  CA-DATA4
36  CA-DATA5
37  CA-DATA6
38  CA-DATA7
39  CA-CHS19
-------------------------------------------
                                        ./.

GRP  1         1.820.703.00
              <--  <--  <--  CONTINUATION
=====================================

ELM 12         1.820.815.00
    CONTROLLER INTERNAL NRS CH19            J12
-------------------------------------------
PNT SIGNAL NAME  COLOR LV TYPE           F
-------------------------------------------
 1A DLBIN-19
 1B + 0.0
 2A + 0.0
 2B DLBGN-19
 3A + 0.0
 3B + 0.0
 4A DLBOA-19
 4B + 0.0
 5A + 0.0
 5B DLBOB-19
 6A + 0.0
 6B + 0.0
 7A CD-ACT19
 7B CD-REP19
 8A CD-REC19
 8B CD-CAL19
 9A + 0.0
 9B + 0.0
10A MONIT-19
10B CA-TC-19
11A INPDI-19
11B INPAD-19
12A RECIN-19
12B
13A + 0.0
13B + 0.0
14A TAPAD-19
14B TAPDI-19
15A +15.0
15B +15.0
16A + 5.6
16B + 5.6
17A + 0.0
17B + 0.0
18A -15.0
18B -15.0
19A TONGEN
19B SGNGND
20A REFLEV
20B + 0.0
21A TA-C307K
21B CA-SAF19
22A TA-CMP19
22B CA-SAF-E
23A + 0.0
23B CA-LSW19
24A CA-LSO19

GRP  1         1.820.703.00
              <--  <--  <--  CONTINUATION
=====================================

ELM 12         1.820.815.00
              <--  <--  <--  CONTINUATION
-------------------------------------------
PNT SIGNAL NAME  COLOR LV TYPE           F
-------------------------------------------
24B
25A CA-ADR-R
25B CA-ADR-S
26A CA-ADR-T
26B CA-ADR-U
27A CA-DATA0
27B CA-DATA1
28A CA-DATA2
28B CA-DATA3
29A CA-DATA4
29B CA-DATA5
30A CA-DATA6
30B CA-DATA7
31A + 0.0
31B + 0.0
32A CA-CHS19
32B + 0.0
-------------------------------------------
                                        ./.
```

```
*    WILLI STUDER AG   *    L O C A T I O N     P I N     L I S T          *  89/07/20  *   8:15  *   P A G E 134   *
*                                 * TAPE TRANSPORT & AUDIO MCH *                                 *  89/04/19 - 00                 *
ASY  5                        AUDIO ELECTRONICS, CH 17 TO 24                                                <--  <--  <--  CONTINUATION

GRP  1         1.820.703.00
              <--  <--  <--  CONTINUATION
=====================================

ELM 13         1.820.710.00
    REPRODUCE AMPLIFIER, CH19               J13
-------------------------------------------
PNT SIGNAL NAME  COLOR LV TYPE           F
-------------------------------------------
 1  TAPLI-19
 2  EQUAL-19
 3  SYPRE-19
 4  K-REC-19
 5  + 0.0
 6  REPRE-19
 7  REPRO-19
 8  + 0.0
 9  CA-TC-19
10  TAPDI-19
11  + 0.0
12  SYNHL-19
13  SYNHH-19
14  + 0.0
15  CA-EQL19
16  CA-SYN19
17  CA-LSW19
18  + 0.0
19  KEY
20  TA-ACT19
21  + 0.0
22  +15.0
23  -15.0
24  + 5.6
25  TA-C307K
26  CA-SAF19
27  CA-ADR-R
28  CA-ADR-S
29  CA-ADR-T
30  CA-ADR-U
31  CA-DATA0
32  CA-DATA1
33  CA-DATA2
34  CA-DATA3
35  CA-DATA4
36  CA-DATA5
37  CA-DATA6
38  CA-DATA7
39  CA-CHS19
-------------------------------------------

GRP  1         1.820.703.00
              <--  <--  <--  CONTINUATION
=====================================

ELM 14         1.820.811.00
    RECORD AMPLIFIER, CH19                  J14
-------------------------------------------
PNT SIGNAL NAME  COLOR LV TYPE           F
-------------------------------------------
 1  RECIN-19
 2  EQUAL-19
 3  BIAFB-19
 4  K-REC-19
 5  + 0.0
 6  BIASA-19
 7  BIASB-19
 8  BIASC-19
 9  RECHL-19
10  RECHH-19
11  + 0.0
12  SYNHL-19
13  SYNHH-19
14  + 0.0
15  AFCSW-19
16  + 0.0
17  CA-BAD19
18  CA-RSW19
19  KEY
20  TA-ACT19
21  + 0.0
22  +15.0
23  -15.0
24  + 5.6
25  TA-C307K
26  CA-SAF19
27  CA-ADR-R
28  CA-ADR-S
29  CA-ADR-T
30  CA-ADR-U
31  CA-DATA0
32  CA-DATA1
33  CA-DATA2
34  CA-DATA3
35  CA-DATA4
36  CA-DATA5
37  CA-DATA6
38  CA-DATA7
39  CA-CHS19
-------------------------------------------

GRP  1         1.820.703.00
              <--  <--  <--  CONTINUATION
=====================================

ELM 15         1.820.813.00
    HF-DRIVER, CH19                         J15
-------------------------------------------
PNT SIGNAL NAME  COLOR LV TYPE           F
-------------------------------------------
 1  BIAFB-19
 2  K-REC-19
 3  + 0.0
 4  + 0.0
 5  BIASA-19
 6  BIASB-19
 7  BIASC-19
 8
 9  ERACS-19
10  AFCSW-19
11  + 0.0
12  ERAHL-19
13  ERAHM-19
14  ERAHH-19
15  ERAHO-19
16  + 0.0
17  CA-BAD19
18  CA-RSW19
19  KEY
20  TA-ACT19
21  + 0.0
22  +15.0
23  -15.0
24  + 5.6
25  TA-C307K
26  CA-SAF19
27  CA-ADR-R
28  CA-ADR-S
29  CA-ADR-T
30  CA-ADR-U
31  CA-DATA0
32  CA-DATA1
33  CA-DATA2
34  CA-DATA3
35  CA-DATA4
36  CA-DATA5
37  CA-DATA6
38  CA-DATA7
39  CA-CHS19
-------------------------------------------
```

```
*****************************************************************************************************************************
*   WILLI STUDER AG   *   L O C A T I O N     P I N     L I S T             * 89/07/20  *   8:15  *  P A G E 135   *
*****************************************************************************************************************************
*                              * TAPE TRANSPORT & AUDIO MCH *                * 89/04/19 - 00                              *
*****************************************************************************************************************************
ASY  5                          AUDIO ELECTRONICS, CH 17 TO 24                                    <--  <--  <--  CONTINUATION

GRP  1          1.820.703.00
                <--  <--  <--  CONTINUATION
=======================================

ELM 16          1.820.715.00
    LINE AMPLIFIER, CH20                  J16
---------------------------------------------
PNT SIGNAL NAME  COLOR LV TYPE             F
---------------------------------------------
 1  MONIT-20
 2  + 0.0
 3  LOUFA-20
 4  LOUFB-20
 5  + 0.0
 6  INPDI-20
 7  INPAD-20
 8  RECIN-20
 9  + 0.0
10  TAPAD-20
11  TAPMS-20
12  TAPDI-20
13  + 0.0
14  LINFA-20
15  LINFB-20
16  CA-EQL20
17  CA-SYN20
18  CA-LSO20
19  KEY
20  TA-ACT20
21  + 0.0
22  +15.0
23  -15.0
24  + 5.6
25  TA-C307K
26  CA-SAF20
27  CA-ADR-R
28  CA-ADR-S
29  CA-ADR-T
30  CA-ADR-U
31  CA-DATA0
32  CA-DATA1
33  CA-DATA2
34  CA-DATA3
35  CA-DATA4
36  CA-DATA5
37  CA-DATA6
38  CA-DATA7
39  CA-CHS20
---------------------------------------------
                                        ./.

GRP  1          1.820.703.00
                <--  <--  <--  CONTINUATION
=======================================

ELM 17          1.820.815.00
    CONTROLLER INTERNAL NRS CH20          J17
---------------------------------------------
PNT SIGNAL NAME  COLOR LV TYPE             F
---------------------------------------------
 1A DLBIN-20
 1B + 0.0
 2A + 0.0
 2B DLBGN-20
 3A + 0.0
 3B + 0.0
 4A DLBOA-20
 4B + 0.0
 5A + 0.0
 5B DLBOB-20
 6A + 0.0
 6B + 0.0
 7A CD-ACT20
 7B CD-REP20
 8A CD-REC20
 8B CD-CAL20
 9A + 0.0
 9B + 0.0
10A MONIT-20
10B CA-TC-20
11A INPDI-20
11B INPAD-20
12A RECIN-20
12B
13A + 0.0
13B + 0.0
14A TAPAD-20
14B TAPDI-20
15A +15.0
15B +15.0
16A + 5.6
16B + 5.6
17A + 0.0
17B + 0.0
18A -15.0
18B -15.0
19A TONGEN
19B SGNGND
20A REFLEV
20B + 0.0
21A TA-C307K
21B CA-SAF20
22A TA-CMP20
22B CA-SAF-E
23A + 0.0
23B CA-LSW20
24A CA-LSO20

GRP  1          1.820.703.00
                <--  <--  <--  CONTINUATION
=======================================

ELM 17          1.820.815.00
                <--  <--  <--  CONTINUATION
---------------------------------------------
PNT SIGNAL NAME  COLOR LV TYPE             F
---------------------------------------------
24B
25A CA-ADR-R
25B CA-ADR-S
26A CA-ADR-T
26B CA-ADR-U
27A CA-DATA0
27B CA-DATA1
28A CA-DATA2
28B CA-DATA3
29A CA-DATA4
29B CA-DATA5
30A CA-DATA6
30B CA-DATA7
31A + 0.0
31B + 0.0
32A CA-CHS20
32B + 0.0
---------------------------------------------
                                        ./.
```

```
*****************************************************************************************************************************
*   WILLI STUDER AG   *   L O C A T I O N     P I N     L I S T             * 89/07/20  *   8:15  *  P A G E 136   *
*****************************************************************************************************************************
*                              * TAPE TRANSPORT & AUDIO MCH *                * 89/04/19 - 00                              *
*****************************************************************************************************************************
ASY  5                          AUDIO ELECTRONICS, CH 17 TO 24                                    <--  <--  <--  CONTINUATION

GRP  1          1.820.703.00
                <--  <--  <--  CONTINUATION
=======================================

ELM 18          1.820.710.00
    REPRODUCE AMPLIFIER, CH20             J18
---------------------------------------------
PNT SIGNAL NAME  COLOR LV TYPE             F
---------------------------------------------
 1  TAPLI-20
 2  EQUAL-20
 3  SYPRE-20
 4  K-REC-20
 5  + 0.0
 6  REPRE-20
 7  REPRO-20
 8  + 0.0
 9  CA-TC-20
10  TAPDI-20
11  + 0.0
12  SYNHL-20
13  SYNHH-20
14  + 0.0
15  CA-EQL20
16  CA-SYN20
17  CA-LSW20
18  + 0.0
19  KEY
20  TA-ACT20
21  + 0.0
22  +15.0
23  -15.0
24  + 5.6
25  TA-C307K
26  CA-SAF20
27  CA-ADR-R
28  CA-ADR-S
29  CA-ADR-T
30  CA-ADR-U
31  CA-DATA0
32  CA-DATA1
33  CA-DATA2
34  CA-DATA3
35  CA-DATA4
36  CA-DATA5
37  CA-DATA6
38  CA-DATA7
39  CA-CHS20
---------------------------------------------

GRP  1          1.820.703.00
                <--  <--  <--  CONTINUATION
=======================================

ELM 19          1.820.811.00
    RECORD AMPLIFIER, CH20                J19
---------------------------------------------
PNT SIGNAL NAME  COLOR LV TYPE             F
---------------------------------------------
 1  RECIN-20
 2  EQUAL-20
 3  BIAFB-20
 4  K-REC-20
 5  + 0.0
 6  BIASA-20
 7  BIASB-20
 8  BIASC-20
 9  RECHL-20
10  RECHH-20
11  + 0.0
12  SYNHL-20
13  SYNHH-20
14  + 0.0
15  AFCSW-20
16  + 0.0
17  CA-BAD20
18  CA-RSW20
19  KEY
20  TA-ACT20
21  + 0.0
22  +15.0
23  -15.0
24  + 5.6
25  TA-C307K
26  CA-SAF20
27  CA-ADR-R
28  CA-ADR-S
29  CA-ADR-T
30  CA-ADR-U
31  CA-DATA0
32  CA-DATA1
33  CA-DATA2
34  CA-DATA3
35  CA-DATA4
36  CA-DATA5
37  CA-DATA6
38  CA-DATA7
39  CA-CHS20
---------------------------------------------

GRP  1          1.820.703.00
                <--  <--  <--  CONTINUATION
=======================================

ELM 20          1.820.813.00
    HF-DRIVER, CH20                       J20
---------------------------------------------
PNT SIGNAL NAME  COLOR LV TYPE             F
---------------------------------------------
 1  BIAFB-20
 2  K-REC-20
 3  + 0.0
 4  + 0.0
 5  BIASA-20
 6  BIASB-20
 7  BIASC-20
 8
 9  ERACS-20
10  AFCSW-20
11  + 0.0
12  ERAHL-20
13  ERAHM-20
14  ERAHH-20
15  ERAHO-20
16  + 0.0
17  CA-BAD20
18  CA-RSW20
19  KEY
20  TA-ACT20
21  + 0.0
22  +15.0
23  -15.0
24  + 5.6
25  TA-C307K
26  CA-SAF20
27  CA-ADR-R
28  CA-ADR-S
29  CA-ADR-T
30  CA-ADR-U
31  CA-DATA0
32  CA-DATA1
33  CA-DATA2
34  CA-DATA3
35  CA-DATA4
36  CA-DATA5
37  CA-DATA6
38  CA-DATA7
39  CA-CHS20
---------------------------------------------
```

```
*    WILLI STUDER AG    *    L O C A T I O N    P I N    L I S T          * 89/07/20  *   8:15  *   P A G E 137   *
*                            * TAPE TRANSPORT & AUDIO MCH *                 * 89/04/19 - 00                          *
ASY  5                       AUDIO ELECTRONICS, CH 17 TO 24                                    <--  <--  <--  CONTINUATION

GRP  1        1.820.703.00
              <--  <--  <--  CONTINUATION
=====================================

ELM 21        1.820.717.00
    BUS CONVERTER                          J21
-------------------------------------------
PNT SIGNAL NAME  COLOR LV TYPE          F
-------------------------------------------
 1A TA-CLPEF
 1B TA-CLMEF
 2A T-AOP-EF
 2B T-AON-EF
 3A S-A1P-E
 3B S-A1N-EF
 4A T-RWP-EF
 4B T-RWN-EF
 5A T-SL-EF
 5B
 6A T-DT0-EF
 6B T-DT1-EF
 7A T-DT2-EF
 7B T-DT3-EF
 8A T-DT4-EF
 8B T-DT5-EF
 9A T-DT6-EF
 9B T-DT7-EF
10A TA-CMP17
10B TA-CMP18
11A TA-CMP19
11B TA-CMP20
12A TA-ACT17
12B TA-ACT18
13A TA-ACT19
13B TA-ACT20
14A
14B
15A +15.0
15B +15.0
16A + 5.6
16B + 5.6
17A + 0.0
17B + 0.0
18A -15.0
18B -15.0
19A TA-C307K
19B
20A CA-SAF-E
20B
21A CA-ADR-R
21B CA-ADR-S
22A CA-ADR-T
22B CA-ADR-U
23A CA-DATA0
23B CA-DATA1
24A CA-DATA2

GRP  1        1.820.703.00
              <--  <--  <--  CONTINUATION
=====================================

ELM 21        1.820.717.00
              <--  <--  <--  CONTINUATION
-------------------------------------------
PNT SIGNAL NAME  COLOR LV TYPE          F
-------------------------------------------
24B CA-DATA3
25A CA-DATA4
25B CA-DATA5
26A CA-DATA6
26B CA-DATA7
27A + 0.0
27B + 0.0
28A CA-CHS17
28B CA-CHS18
29A CA-CHS19
29B CA-CHS20
30A + 0.0
30B + 0.0
31A
31B
32A
32B
-------------------------------------------

ELM 31
    LINE INPUT/OUTPUT, CH17            J22
-------------------------------------------
PNT SIGNAL NAME  COLOR LV TYPE          F
-------------------------------------------
 1  LOUFA-17
 2  LOUFB-17
 3  KEY
 4  + 0.0
 5  LINFA-17
 6  LINFB-17
 7  + 0.0
-------------------------------------------
                                        ./.

GRP  1        1.820.703.00
              <--  <--  <--  CONTINUATION
=====================================

ELM 32
    NOISE REDUCTION, CH17              J23
-------------------------------------------
PNT SIGNAL NAME  COLOR LV TYPE          F
-------------------------------------------
 1  CD-CAL17
 2  CD-REC17
 3  CD-REP17
 4  CD-ACT17
 5  KEY
 6  + 0.0
 7  DLBOB-17
 8  + 0.0
 9  DLBOA-17
10  + 0.0
11  DLBGN-17
12  + 0.0
13  DLBIN-17
-------------------------------------------

ELM 33
    REPRODUCE PREAMPLIFIER, CH17       J24
-------------------------------------------
PNT SIGNAL NAME  COLOR LV TYPE          F
-------------------------------------------
 1  REPRE-17
 2  REPRO-17
 3  KEY
 4  + 0.0
-------------------------------------------

ELM 34
    RECORD HEAD, CH17                  J25
-------------------------------------------
PNT SIGNAL NAME  COLOR LV TYPE          F
-------------------------------------------
 1  RECHL-17
 2  RECHH-17
 3  KEY
 4  + 0.0
-------------------------------------------

ELM 35
    ERASE HEAD, CH17                   J26
-------------------------------------------
PNT SIGNAL NAME  COLOR LV TYPE          F
-------------------------------------------
 1  ERAHL-17
 2  ERAHH-17
 3  KEY
 4  ERAHO-17
-------------------------------------------
```

```
*    WILLI STUDER AG    *    L O C A T I O N    P I N    L I S T          * 89/07/20  *   8:15  *   P A G E 138   *
*                            * TAPE TRANSPORT & AUDIO MCH *                 * 89/04/19 - 00                          *
ASY  5                       AUDIO ELECTRONICS, CH 17 TO 24                                    <--  <--  <--  CONTINUATION

GRP  1        1.820.703.00
              <--  <--  <--  CONTINUATION
=====================================

ELM 36
    LINE INPUT/OUTPUT, CH18            J27
-------------------------------------------
PNT SIGNAL NAME  COLOR LV TYPE          F
-------------------------------------------
 1  LOUFA-18
 2  LOUFB-18
 3  KEY
 4  + 0.0
 5  LINFA-18
 6  LINFB-18
 7  + 0.0
-------------------------------------------

ELM 37
    NOISE REDUCTION, CH18              J28
-------------------------------------------
PNT SIGNAL NAME  COLOR LV TYPE          F
-------------------------------------------
 1  CD-CAL18
 2  CD-REC18
 3  CD-REP18
 4  CD-ACT18
 5  KEY
 6  + 0.0
 7  DLBOB-18
 8  + 0.0
 9  DLBOA-18
10  + 0.0
11  DLBGN-18
12  + 0.0
13  DLBIN-18
-------------------------------------------

ELM 38
    REPRODUCE PREAMPLIFIER, CH18       J29
-------------------------------------------
PNT SIGNAL NAME  COLOR LV TYPE          F
-------------------------------------------
 1  REPRE-18
 2  REPRO-18
 3  KEY
 4  + 0.0
-------------------------------------------
                                        ./.

GRP  1        1.820.703.00
              <--  <--  <--  CONTINUATION
=====================================

ELM 39
    RECORD HEAD, CH18                  J30
-------------------------------------------
PNT SIGNAL NAME  CCLOR LV TYPE          F
-------------------------------------------
 1  RECHL-18
 2  RECHH-18
 3  KEY
 4  + 0.0
-------------------------------------------

ELM 40
    ERASE HEAD, CH18                   J31
-------------------------------------------
PNT SIGNAL NAME  COLOR LV TYPE          F
-------------------------------------------
 1  ERAHL-18
 2  ERAHH-18
 3  KEY
 4  ERAHO-18
-------------------------------------------

ELM 41
    LINE INPUT/OUTPUT, CH19            J32
-------------------------------------------
PNT SIGNAL NAME  COLOR LV TYPE          F
-------------------------------------------
 1  LOUFA-19
 2  LOUFB-19
 3  KEY
 4  + 0.0
 5  LINFA-19
 6  LINFB-19
 7  + 0.0
-------------------------------------------
                                        ./.

GRP  1        1.820.703.00
              <--  <--  <--  CONTINUATION
=====================================

ELM 42
    NOISE REDUCTION, CH19              J33
-------------------------------------------
PNT SIGNAL NAME  COLOR LV TYPE          F
-------------------------------------------
 1  CD-CAL19
 2  CD-REC19
 3  CD-REP19
 4  CD-ACT19
 5  KEY
 6  + 0.0
 7  DLBOB-19
 8  + 0.0
 9  DLBOA-19
10  + 0.0
11  DLBGN-19
12  + 0.0
13  DLBIN-19
-------------------------------------------

ELM 43
    REPRODUCE PREAMPLIFIER, CH19       J34
-------------------------------------------
PNT SIGNAL NAME  COLOR LV TYPE          F
-------------------------------------------
 1  REPRE-19
 2  REPRO-19
 3  KEY
 4  + 0.0
-------------------------------------------

ELM 44
    RECORD HEAD, CH19                  J35
-------------------------------------------
PNT SIGNAL NAME  COLOR LV TYPE          F
-------------------------------------------
 1  RECHL-19
 2  RECHH-19
 3  KEY
 4  + 0.0
-------------------------------------------

ELM 45
    ERASE HEAD, CH19                   J36
-------------------------------------------
PNT SIGNAL NAME  COLOR LV TYPE          F
-------------------------------------------
 1  ERAHL-19
 2  ERAHH-19
 3  KEY
 4  ERAHO-19
-------------------------------------------
```

```
*****************************************************************************************************************************
*   WILLI STUDER AG   *   L O C A T I O N   P I N   L I S T          * 89/07/20 *  8:15 *  P A G E 139  *
*****************************************************************************************************************************
*                         * TAPE TRANSPORT & AUDIO MCH *               * 89/04/19 - 00                                    *
*****************************************************************************************************************************
ASY  5                    AUDIO ELECTRONICS, CH 17 TO 24                                  <--  <--  <--  CONTINUATION

GRP  1        1.820.703.00
           <--  <--  <--  CONTINUATION
=======================================

ELM 46
    LINE INPUT/OUTPUT, CH20                    J37
---------------------------------------
PNT SIGNAL NAME  COLOR LV TYPE              F
---------------------------------------
 1  LOUFA-20
 2  LOUFB-20
 3  KEY
 4  + 0.0
 5  LINFA-20
 6  LINFB-20
 7  + 0.0
---------------------------------------

ELM 47
    NOISE REDUCTION, CH20                      J38
---------------------------------------
PNT SIGNAL NAME  COLOR LV TYPE              F
---------------------------------------
 1  CD-CAL20
 2  CD-REC20
 3  CD-REP20
 4  CD-ACT20
 5  KEY
 6  + 0.0
 7  DL80B-20
 8  + 0.0
 9  DL80A-20
10  + 0.0
11  DL8GN-20
12  + 0.0
13  DL8IN-20
---------------------------------------

ELM 48
    REPRODUCE PREAMPLIFIER, CH20               J39
---------------------------------------
PNT SIGNAL NAME  COLOR LV TYPE              F
---------------------------------------
 1  REPRE-20
 2  REPRO-20
 3  KEY
 4  + 0.0
---------------------------------------
                                              ./.

GRP  1        1.820.703.00
           <--  <--  <--  CONTINUATION
=======================================

ELM 49
    RECORD HEAD, CH20                          J40
---------------------------------------
PNT SIGNAL NAME  COLOR LV TYPE              F
---------------------------------------
 1  RECHL-20
 2  RECHH-20
 3  KEY
 4  + 0.0
---------------------------------------

ELM 50
    ERASE HEAD, CH20                           J41
---------------------------------------
PNT SIGNAL NAME  COLOR LV TYPE              F
---------------------------------------
 1  ERAHL-20
 2  ERAHH-20
 3  KEY
 4  ERAHO-20
---------------------------------------

ELM 60
    JUMPER SWITCH                              JS01
---------------------------------------
PNT SIGNAL NAME  COLOR LV TYPE              F
---------------------------------------
 1  T-A1P-EF
 2  S-A1P-E
 3  T-A1N-EF
 4  S-A1N-E
 5  T-A1P-EF
---------------------------------------
                                              ./.

GRP  1        1.820.703.00
           <--  <--  <--  CONTINUATION
=======================================

ELM 70
                                                P01
---------------------------------------
PNT SIGNAL NAME  COLOR LV TYPE              F
---------------------------------------
 1  + 0.0
 2  + 0.0
 3  + 5.6
 4  + 5.6
 5  +15.0
 6  -15.0
 7  TONGEN
 8  SGNGND
 9  REFLEV
10  + 0.0
11  TA-CLPEF
12  TA-CLMEF
13  + 0.0
14  T-AOP-EF
15  T-AON-EF
16  + 0.0
17  T-A1P-EF
18  T-A1N-EF
19  + 0.0
20  T-RWP-EF
21  T-RWN-EF
22  + 0.0
23  T-SL-EF
24  + 0.0
25  T-DT0-EF
26  + 0.0
27  T-DT1-EF
28  + 0.0
29  T-DT2-EF
30  + 0.0
31  T-DT3-EF
32  + 0.0
33  T-DT4-EF
34  + 0.0
35  T-DT5-EF
36  + 0.0
37  T-DT6-EF
38  + 0.0
39  T-DT7-EF
40  + 0.0
---------------------------------------
```

```
*****************************************************************************************************************************
*   WILLI STUDER AG   *   L O C A T I O N   P I N   L I S T          * 89/07/20 *  8:15 *  P A G E 140  *
*****************************************************************************************************************************
*                         * TAPE TRANSPORT & AUDIO MCH *               * 89/04/19 - 00                                    *
*****************************************************************************************************************************
ASY  5                    AUDIO ELECTRONICS, CH 17 TO 24                                  <--  <--  <--  CONTINUATION

GRP  2        1.820.703.00
    BASISBOARD, CH 21 TO 24
=======================================

ELM  1        1.820.715.00
    LINE AMPLIFIER, CH21                       J01
---------------------------------------
PNT SIGNAL NAME  COLOR LV TYPE              F
---------------------------------------
 1  MONIT-21
 2  + 0.0
 3  LOUFA-21
 4  LOUFB-21
 5  + 0.0
 6  INPDI-21
 7  INPAD-21
 8  RECIN-21
 9  + 0.0
10  TAPAD-21
11  TAPMS-21
12  TAPDI-21
13  + 0.0
14  LINFA-21
15  LINFB-21
16  CA-EQL21
17  CA-SYN21
18  CA-LSO21
19  KEY
20  TA-ACT21
21  + 0.0
22  +15.0
23  -15.0
24  + 5.6
25  TA-C307K
26  CA-SAF21
27  CA-ADR-R
28  CA-ADR-S
29  CA-ADR-T
30  CA-ADR-U
31  CA-DATA0
32  CA-DATA1
33  CA-DATA2
34  CA-DATA3
35  CA-DATA4
36  CA-DATA5
37  CA-DATA6
38  CA-DATA7
39  CA-CHS21
---------------------------------------
                                              ./.

GRP  2        1.820.703.00
           <--  <--  <--  CONTINUATION
=======================================

ELM  2        1.820.815.00
    CONTROLLER INTERNAL NRS CH21               J02
---------------------------------------
PNT SIGNAL NAME  COLOR LV TYPE              F
---------------------------------------
 1A DLBIN-21
 1B + 0.0
 2A + 0.0
 2B DL8GN-21
 3A + 0.0
 3B + 0.0
 4A DL80A-21
 4B + 0.0
 5A + 0.0
 5B DL80B-21
 6A + 0.0
 6B + 0.0
 7A CD-ACT21
 7B CD-REP21
 8A CD-REC21
 8B CD-CAL21
 9A + 0.0
 9B + 0.0
10A MONIT-21
10B CA-TC-21
11A INPDI-21
11B INPAD-21
12A RECIN-21
12B
13A + 0.0
13B + 0.0
14A TAPAD-21
14B TAPDI-21
15A +15.0
15B +15.0
16A + 5.6
16B + 5.6
17A + 0.0
17B + 0.0
18A -15.0
18B -15.0
19A TONGEN
19B SGNGND
20A REFLEV
20B + 0.0
21A TA-C307K
21B CA-SAF21
22A TA-CMP21
22B CA-SAF-F
23A + 0.0
23B CA-LSW21
24A CA-LSO21

GRP  2        1.820.703.00
           <--  <--  <--  CONTINUATION
=======================================

ELM  2        1.820.815.00
           <--  <--  <--  CONTINUATION
---------------------------------------
PNT SIGNAL NAME  COLOR LV TYPE              F
---------------------------------------
24B
25A CA-ADR-R
25B CA-ADR-S
26A CA-ADR-T
26B CA-ADR-U
27A CA-DATA0
27B CA-DATA1
28A CA-DATA2
28B CA-DATA3
29A CA-DATA4
29B CA-DATA5
30A CA-DATA6
30B CA-DATA7
31A + 0.0
31B + 0.0
32A CA-CHS21
32B + 0.0
---------------------------------------
                                              ./.
```

WILLI STUDER AG * L O C A T I O N P I N L I S T * 89/07/20 * 8:15 * P A G E 141

* TAPE TRANSPORT & AUDIO MCH * * 89/04/19 - 00

ASY 5 AUDIO ELECTRONICS, CH 17 TO 24

GRP 2 1.820.703.00 <-- <-- <-- CONTINUATION

ELM 3 1.820.710.00
REPRODUCE AMPLIFIER, CH21 J03

PNT	SIGNAL NAME	COLOR	LV	TYPE	F
1	TAPLI-21				
2	EQUAL-21				
3	SYPRE-21				
4	K-REC-21				
5	+ 0.0				
6	REPRE-21				
7	REPRO-21				
8	+ 0.0				
9	CA-TC-21				
10	TAPDI-21				
11	+ 0.0				
12	SYNHL-21				
13	SYNHH-21				
14	+ 0.0				
15	CA-EQL21				
16	CA-SYN21				
17	CA-LSW21				
18	+ 0.0				
19	KEY				
20	TA-ACT21				
21	+ 0.0				
22	+15.0				
23	-15.0				
24	+ 5.6				
25	TA-C307K				
26	CA-SAF21				
27	CA-ADR-R				
28	CA-ADR-S				
29	CA-ADR-T				
30	CA-ADR-U				
31	CA-DATA0				
32	CA-DATA1				
33	CA-DATA2				
34	CA-DATA3				
35	CA-DATA4				
36	CA-DATA5				
37	CA-DATA6				
38	CA-DATA7				
39	CA-CHS21				

GRP 2 1.820.703.00 <-- <-- <-- CONTINUATION

ELM 4 1.820.811.00
RECORD AMPLIFIER, CH21 J04

PNT	SIGNAL NAME	COLOR	LV	TYPE	F
1	RECIN-21				
2	EQUAL-21				
3	BIAFB-21				
4	K-REC-21				
5	+ 0.0				
6	BIASA-21				
7	BIASB-21				
8	BIASC-21				
9	RECHL-21				
10	RECHH-21				
11	+ 0.0				
12	SYNHL-21				
13	SYNHH-21				
14	+ 0.0				
15	AFCSW-21				
16	+ 0.0				
17	CA-BAD21				
18	CA-RSW21				
19	KEY				
20	TA-ACT21				
21	+ 0.0				
22	+15.0				
23	-15.0				
24	+ 5.6				
25	TA-C307K				
26	CA-SAF21				
27	CA-ADR-R				
28	CA-ADR-S				
29	CA-ADR-T				
30	CA-ADR-U				
31	CA-DATA0				
32	CA-DATA1				
33	CA-DATA2				
34	CA-DATA3				
35	CA-DATA4				
36	CA-DATA5				
37	CA-DATA6				
38	CA-DATA7				
39	CA-CHS21				

GRP 2 1.820.703.00 <-- <-- <-- CONTINUATION

ELM 5 1.820.813.00
HF-DRIVER, CH21 J05

PNT	SIGNAL NAME	COLOR	LV	TYPE	F
1	BIAFB-21				
2	K-REC-21				
3	+ 0.0				
4	+ 0.0				
5	BIASA-21				
6	BIASB-21				
7	BIASC-21				
8					
9	ERACS-21				
10	AFCSW-21				
11	+ 0.0				
12	ERAHL-21				
13	ERAHM-21				
14	ERAHH-21				
15	ERAHO-21				
16	+ 0.0				
17	CA-BAD21				
18	CA-RSW21				
19	KEY				
20	TA-ACT21				
21	+ 0.0				
22	+15.0				
23	-15.0				
24	+ 5.6				
25	TA-C307K				
26	CA-SAF21				
27	CA-ADR-R				
28	CA-ADR-S				
29	CA-ADR-T				
30	CA-ADR-U				
31	CA-DATA0				
32	CA-DATA1				
33	CA-DATA2				
34	CA-DATA3				
35	CA-DATA4				
36	CA-DATA5				
37	CA-DATA6				
38	CA-DATA7				
39	CA-CHS21				

WILLI STUDER AG * L O C A T I O N P I N L I S T * 89/07/20 * 8:15 * P A G E 142

* TAPE TRANSPORT & AUDIO MCH * * 89/04/19 - 00

ASY 5 AUDIO ELECTRONICS, CH 17 TO 24

GRP 2 1.820.703.00 <-- <-- <-- CONTINUATION

ELM 6 1.820.715.00
LINE AMPLIFIER, CH22 J06

PNT	SIGNAL NAME	COLOR	LV	TYPE	F
1	MONIT-22				
2	+ 0.0				
3	LOUFA-22				
4	LOUFB-22				
5	+ 0.0				
6	INPDI-22				
7	INPAD-22				
8	RECIN-22				
9	+ 0.0				
10	TAPAD-22				
11	TAPMS-22				
12	TAPDI-22				
13	+ 0.0				
14	LINFA-22				
15	LINFB-22				
16	CA-EQL22				
17	CA-SYN22				
18	CA-LSO22				
19	KEY				
20	TA-ACT22				
21	+ 0.0				
22	+15.0				
23	-15.0				
24	+ 5.6				
25	TA-C307K				
26	CA-SAF22				
27	CA-ADR-R				
28	CA-ADR-S				
29	CA-ADR-T				
30	CA-ADR-U				
31	CA-DATA0				
32	CA-DATA1				
33	CA-DATA2				
34	CA-DATA3				
35	CA-DATA4				
36	CA-DATA5				
37	CA-DATA6				
38	CA-DATA7				
39	CA-CHS22				

./.

GRP 2 1.820.703.00 <-- <-- <-- CONTINUATION

ELM 7 1.820.815.00
CONTROLLER INTERNAL NRS CH22 J07

PNT	SIGNAL NAME	COLOR	LV	TYPE	F
1A	DLBIN-22				
1B	+ 0.0				
2A	+ 0.0				
2B	DLBGN-22				
3A	+ 0.0				
3B	+ 0.0				
4A	DLBOA-22				
4B	+ 0.0				
5A	+ 0.0				
5B	DLBOB-22				
6A	+ 0.0				
6B	+ 0.0				
7A	CD-ACT22				
7B	CD-REP22				
8A	CD-REC22				
8B	CD-CAL22				
9A	+ 0.0				
9B	+ 0.0				
10A	MONIT-22				
10B	CA-TC-22				
11A	INPDI-22				
11B	INPAD-22				
12A	RECIN-22				
12B					
13A	+ 0.0				
13B	+ 0.0				
14A	TAPAD-22				
14B	TAPDI-22				
15A	+15.0				
15B	+15.0				
16A	+ 5.6				
16B	+ 5.6				
17A	+ 0.0				
17B	+ 0.0				
18A	-15.0				
18B	-15.0				
19A	TONGEN				
19B	SGNGND				
20A	REFLEV				
20B	+ 0.0				
21A	TA-C307K				
21B	CA-SAF22				
22A	TA-CMP22				
22B	CA-SAF-F				
23A	+ 0.0				
23B	CA-LSW22				
24A	CA-LSO22				

GRP 2 1.820.703.00 <-- <-- <-- CONTINUATION

ELM 7 1.820.815.00 <-- <-- <-- CONTINUATION

PNT	SIGNAL NAME	COLOR	LV	TYPE	F
24B					
25A	CA-ADR-R				
25B	CA-ADR-S				
26A	CA-ADR-T				
26B	CA-ADR-U				
27A	CA-DATA0				
27B	CA-DATA1				
28A	CA-DATA2				
28B	CA-DATA3				
29A	CA-DATA4				
29B	CA-DATA5				
30A	CA-DATA6				
30B	CA-DATA7				
31A	+ 0.0				
31B	+ 0.0				
32A	CA-CHS22				
32B	+ 0.0				

./.

```
*****************************************************************************************************************************
*   WILLI STUDER AG   *   L O C A T I O N   P I N   L I S T          * 89/07/20 *  8:15 *  P A G E 143  *
*****************************************************************************************************************************
*                          * TAPE TRANSPORT & AUDIO MCH *             * 89/04/19 - 00                                      *
*****************************************************************************************************************************
ASY  5                      AUDIO ELECTRONICS, CH 17 TO 24                                    <--  <--  <--  CONTINUATION

GRP  2        1.820.703.00
            <--  <--  <--  CONTINUATION
=======================================

ELM  8        1.820.710.00
   REPRODUCE AMPLIFIER, CH22          J08
---------------------------------------
PNT SIGNAL NAME  COLOR LV TYPE         F
---------------------------------------
 1  TAPLI-22
 2  EQUAL-22
 3  SYPRE-22
 4  K-REC-22
 5  + 0.0
 6  REPRE-22
 7  REPRO-22
 8  + 0.0
 9  CA-TC-22
10  TAPDI-22
11  + 0.0
12  SYNHL-22
13  SYNHH-22
14  + 0.0
15  CA-EQL22
16  CA-SYN22
17  CA-LSW22
18  + 0.0
19  KEY
20  TA-ACT22
21  + 0.0
22  +15.0
23  -15.0
24  + 5.6
25  TA-C307K
26  CA-SAF22
27  CA-ADR-R
28  CA-ADR-S
29  CA-ADR-T
30  CA-ADR-U
31  CA-DATA0
32  CA-DATA1
33  CA-DATA2
34  CA-DATA3
35  CA-DATA4
36  CA-DATA5
37  CA-DATA6
38  CA-DATA7
39  CA-CHS22
---------------------------------------

GRP  2        1.820.703.00
            <--  <--  <--  CONTINUATION
=======================================

ELM  9        1.820.811.00
   RECORD AMPLIFIER, CH22             J09
---------------------------------------
PNT SIGNAL NAME  COLOR LV TYPE         F
---------------------------------------
 1  RECIN-22
 2  EQUAL-22
 3  BIAFB-22
 4  K-REC-22
 5  + 0.0
 6  BIASA-22
 7  BIASB-22
 8  BIASC-22
 9  RECHL-22
10  RECHH-22
11  + 0.0
12  SYNHL-22
13  SYNHH-22
14  + 0.0
15  AFCSW-22
16  + 0.0
17  CA-BAD22
18  CA-RSW22
19  KEY
20  TA-ACT22
21  + 0.0
22  +15.0
23  -15.0
24  + 5.6
25  TA-C307K
26  CA-SAF22
27  CA-ADR-R
28  CA-ADR-S
29  CA-ADR-T
30  CA-ADR-U
31  CA-DATA0
32  CA-DATA1
33  CA-DATA2
34  CA-DATA3
35  CA-DATA4
36  CA-DATA5
37  CA-DATA6
38  CA-DATA7
39  CA-CHS22
---------------------------------------

GRP  2        1.820.703.00
            <--  <--  <--  CONTINUATION
=======================================

ELM 10        1.820.813.00
   HF-DRIVER, CH22                    J10
---------------------------------------
PNT SIGNAL NAME  COLOR LV TYPE         F
---------------------------------------
 1  BIAFB-22
 2  K-REC-22
 3  + 0.0
 4  + 0.0
 5  BIASA-22
 6  BIASB-22
 7  BIASC-22
 8
 9  ERACS-22
10  AFCSW-22
11  + 0.0
12  ERAHL-22
13  ERAHM-22
14  ERAHH-22
15  ERAHO-22
16  + 0.0
17  CA-BAD22
18  CA-RSW22
19  KEY
20  TA-ACT22
21  + 0.0
22  +15.0
23  -15.0
24  + 5.6
25  TA-C307K
26  CA-SAF22
27  CA-ADR-R
28  CA-ADR-S
29  CA-ADR-T
30  CA-ADR-U
31  CA-DATA0
32  CA-DATA1
33  CA-DATA2
34  CA-DATA3
35  CA-DATA4
36  CA-DATA5
37  CA-DATA6
38  CA-DATA7
39  CA-CHS22
---------------------------------------
```

```
*****************************************************************************************************************************
*   WILLI STUDER AG   *   L O C A T I O N   P I N   L I S T          * 89/07/20 *  8:15 *  P A G E 144  *
*****************************************************************************************************************************
*                          * TAPE TRANSPORT & AUDIO MCH *             * 89/04/19 - 00                                      *
*****************************************************************************************************************************
ASY  5                      AUDIO ELECTRONICS, CH 17 TO 24                                    <--  <--  <--  CONTINUATION

GRP  2        1.820.703.00
            <--  <--  <--  CONTINUATION
=======================================

ELM 11        1.820.715.00
   LINE AMPLIFIER, CH23               J11
---------------------------------------
PNT SIGNAL NAME  COLOR LV TYPE         F
---------------------------------------
 1  MONIT-23
 2  + 0.0
 3  LOUFA-23
 4  LOUFB-23
 5  + 0.0
 6  INPDI-23
 7  INPAD-23
 8  RECIN-23
 9  + 0.0
10  TAPAD-23
11  TAPMS-23
12  TAPDI-23
13  + 0.0
14  LINFA-23
15  LINFB-23
16  CA-EQL23
17  CA-SYN23
18  CA-LSO23
19  KEY
20  TA-ACT23
21  + 0.0
22  +15.0
23  -15.0
24  + 5.6
25  TA-C307K
26  CA-SAF23
27  CA-ADR-R
28  CA-ADR-S
29  CA-ADR-T
30  CA-ADR-U
31  CA-DATA0
32  CA-DATA1
33  CA-DATA2
34  CA-DATA3
35  CA-DATA4
36  CA-DATA5
37  CA-DATA6
38  CA-DATA7
39  CA-CHS23
---------------------------------------
                                                                                              ./.

GRP  2        1.820.703.00
            <--  <--  <--  CONTINUATION
=======================================

ELM 12        1.820.815.00
   CONTROLLER INTERNAL NRS CH23       J12
---------------------------------------
PNT SIGNAL NAME  COLOR LV TYPE         F
---------------------------------------
 1A DLBIN-23
 1B + 0.0
 2A + 0.0
 2B DLBGN-23
 3A + 0.0
 3B + 0.0
 4A DLBOA-23
 4B + 0.0
 5A + 0.0
 5B DLBOB-23
 6A + 0.0
 6B + 0.0
 7A CD-ACT23
 7B CD-REP23
 8A CD-REC23
 8B CD-CAL23
 9A + 0.0
 9B + 0.0
10A MONIT-23
10B CA-TC-23
11A INPDI-23
11B INPAD-23
12A RECIN-23
12B
13A + 0.0
13B + 0.0
14A TAPAD-23
14B TAPDI-23
15A +15.0
15B +15.0
16A + 5.6
16B + 5.6
17A + 0.0
17B + 0.0
18A -15.0
18B -15.0
19A TONGEN
19B SGNGND
20A REFLEV
20B + 0.0
21A TA-C307K
21B CA-SAF23
22A TA-CMP23
22B CA-SAF-F
23A + 0.0
23B CA-LSW23
24A CA-LSO23

GRP  2        1.820.703.00
            <--  <--  <--  CONTINUATION
=======================================

ELM 12        1.820.815.00
            <--  <--  <--  CONTINUATION
---------------------------------------
PNT SIGNAL NAME  COLOR LV TYPE         F
---------------------------------------
24B
25A CA-ADR-R
25B CA-ADR-S
26A CA-ADR-T
26B CA-ADR-U
27A CA-DATA0
27B CA-DATA1
28A CA-DATA2
28B CA-DATA3
29A CA-DATA4
29B CA-DATA5
30A CA-DATA6
30B CA-DATA7
31A + 0.0
31B + 0.0
32A CA-CHS23
32B + 0.0
---------------------------------------
                                                                                              ./.
```

```
*****************************************************************************************************************************
*    WILLI STUDER AG   *    L O C A T I O N     P I N     L I S T          * 89/07/20  *   8:15  *   P A G E 145   *
*****************************************************************************************************************************
*                              * TAPE TRANSPORT & AUDIO MCH *                 * 89/04/19 - 00                             *
*****************************************************************************************************************************
ASY  5                         AUDIO ELECTRONICS, CH 17 TO 24                                  <--  <--  <--  CONTINUATION

GRP  2          1.820.703.00
                <--  <--  <--  CONTINUATION
=======================================

ELM 13          1.820.710.00
    REPRODUCE AMPLIFIER, CH23                J13
---------------------------------------
PNT SIGNAL NAME  COLOR LV TYPE           F
---------------------------------------
 1  TAPLI-23
 2  EQUAL-23
 3  SYPRE-23
 4  K-REC-23
 5  + 0.0
 6  REPRE-23
 7  REPRO-23
 8  + 0.0
 9  CA-TC-23
10  TAPDI-23
11  + 0.0
12  SYNHL-23
13  SYNHH-23
14  + 0.0
15  CA-EQL23
16  CA-SYN23
17  CA-LSW23
18  + 0.0
19  KEY
20  TA-ACT23
21  + 0.0
22  +15.0
23  -15.0
24  + 5.6
25  TA-C307K
26  CA-SAF23
27  CA-ADR-R
28  CA-ADR-S
29  CA-ADR-T
30  CA-ADR-U
31  CA-DATA0
32  CA-DATA1
33  CA-DATA2
34  CA-DATA3
35  CA-DATA4
36  CA-DATA5
37  CA-DATA6
38  CA-DATA7
39  CA-CHS23
---------------------------------------

GRP  2          1.820.703.00
                <--  <--  <--  CONTINUATION
=======================================

ELM 14          1.820.811.00
    RECORD AMPLIFIER, CH23               J14
---------------------------------------
PNT SIGNAL NAME  COLOR LV TYPE           F
---------------------------------------
 1  RECIN-23
 2  EQUAL-23
 3  BIAFB-23
 4  K-REC-23
 5  + 0.0
 6  BIASA-23
 7  BIASB-23
 8  BIASC-23
 9  RECHL-23
10  RECHH-23
11  + 0.0
12  SYNHL-23
13  SYNHH-23
14  + 0.0
15  AFCSW-23
16  + 0.0
17  CA-BAD23
18  CA-RSW23
19  KEY
20  TA-ACT23
21  + 0.0
22  +15.0
23  -15.0
24  + 5.6
25  TA-C307K
26  CA-SAF23
27  CA-ADR-R
28  CA-ADR-S
29  CA-ADR-T
30  CA-ADR-U
31  CA-DATA0
32  CA-DATA1
33  CA-DATA2
34  CA-DATA3
35  CA-DATA4
36  CA-DATA5
37  CA-DATA6
38  CA-DATA7
39  CA-CHS23
---------------------------------------

GRP  2          1.820.703.00
                <--  <--  <--  CONTINUATION
=======================================

ELM 15          1.820.813.00
    HF-DRIVER, CH23                      J15
---------------------------------------
PNT SIGNAL NAME  COLOR LV TYPE           F
---------------------------------------
 1  BIAFB-23
 2  K-REC-23
 3  + 0.0
 4  + 0.0
 5  BIASA-23
 6  BIASB-23
 7  BIASC-23
 8
 9  ERACS-23
10  AFCSW-23
11  + 0.0
12  ERAHL-23
13  ERAHM-23
14  ERAHH-23
15  ERAHO-23
16  + 0.0
17  CA-BAD23
18  CA-RSW23
19  KEY
20  TA-ACT23
21  + 0.0
22  +15.0
23  -15.0
24  + 5.6
25  TA-C307K
26  CA-SAF23
27  CA-ADR-R
28  CA-ADR-S
29  CA-ADR-T
30  CA-ADR-U
31  CA-DATA0
32  CA-DATA1
33  CA-DATA2
34  CA-DATA3
35  CA-DATA4
36  CA-DATA5
37  CA-DATA6
38  CA-DATA7
39  CA-CHS23
---------------------------------------
```

```
*****************************************************************************************************************************
*    WILLI STUDER AG   *    L O C A T I O N     P I N     L I S T          * 89/07/20  *   8:15  *   P A G E 146   *
*****************************************************************************************************************************
*                              * TAPE TRANSPORT & AUDIO MCH *                 * 89/04/19 - 00                             *
*****************************************************************************************************************************
ASY  5                         AUDIO ELECTRONICS, CH 17 TO 24                                  <--  <--  <--  CONTINUATION

GRP  2          1.820.703.00
                <--  <--  <--  CONTINUATION
=======================================

ELM 16          1.820.715.00
    LINE AMPLIFIER, CH24                 J16
---------------------------------------
PNT SIGNAL NAME  COLOR LV TYPE           F
---------------------------------------
 1  MONIT-24
 2  + 0.0
 3  LOUFA-24
 4  LOUFB-24
 5  + 0.0
 6  INPDI-24
 7  INPAD-24
 8  RECIN-24
 9  + 0.0
10  TAPAD-24
11  TAPMS-24
12  TAPDI-24
13  + 0.0
14  LINFA-24
15  LINFB-24
16  CA-EQL24
17  CA-SYN24
18  CA-LSO24
19  KEY
20  TA-ACT24
21  + 0.0
22  +15.0
23  -15.0
24  + 5.6
25  TA-C307K
26  CA-SAF24
27  CA-ADR-R
28  CA-ADR-S
29  CA-ADR-T
30  CA-ADR-U
31  CA-DATA0
32  CA-DATA1
33  CA-DATA2
34  CA-DATA3
35  CA-DATA4
36  CA-DATA5
37  CA-DATA6
38  CA-DATA7
39  CA-CHS24
---------------------------------------
                                      ./.

GRP  2          1.820.703.00
                <--  <--  <--  CONTINUATION
=======================================

ELM 17          1.820.815.00
    CONTROLLER INTERNAL NRS CH24         J17
---------------------------------------
PNT SIGNAL NAME  COLOR LV TYPE           F
---------------------------------------
 1A DLBIN-24
 1B + 0.0
 2A + 0.0
 2B DLBGN-24
 3A + 0.0
 3B + 0.0
 4A DLBOA-24
 4B + 0.0
 5A + 0.0
 5B DLBOB-24
 6A + 0.0
 6B + 0.0
 7A CD-ACT24
 7B CD-REP24
 8A CD-REC24
 8B CD-CAL24
 9A + 0.0
 9B + 0.0
10A MONIT-24
10B CA-TC-24
11A INPDI-24
11B INPAD-24
12A RECIN-24
12B
13A + 0.0
13B + 0.0
14A TAPAD-24
14B TAPDI-24
15A +15.0
15B +15.0
16A + 5.6
16B + 5.6
17A + 0.0
17B + 0.0
18A -15.0
18B -15.0
19A TONGEN
19B SGNGND
20A REFLEV
20B + 0.0
21A TA-C307K
21B CA-SAF24
22A TA-CMP24
22B CA-SAF-F
23A + 0.0
23B CA-LSW24
24A CA-LSO24

GRP  2          1.820.703.00
                <--  <--  <--  CONTINUATION
=======================================

ELM 17          1.820.815.00
                <--  <--  <--  CONTINUATION
---------------------------------------
PNT SIGNAL NAME  COLOR LV TYPE           F
---------------------------------------
24B
25A CA-ADR-R
25B CA-ADR-S
26A CA-ADR-T
26B CA-ADR-U
27A CA-DATA0
27B CA-DATA1
28A CA-DATA2
28B CA-DATA3
29A CA-DATA4
29B CA-DATA5
30A CA-DATA6
30B CA-DATA7
31A + 0.0
31B + 0.0
32A CA-CHS24
32B + 0.0
---------------------------------------
                                      ./.
```

```
*    WILLI STUDER AG    *    L O C A T I O N    P I N    L I S T          *  89/07/20  *   8:15  *  P A G E 147   *
*                            * TAPE TRANSPORT & AUDIO MCH *                *  89/04/19 - 00                       *
ASY  5                       AUDIO ELECTRONICS, CH 17 TO 24                                    <--  <--  <--  CONTINUATION

GRP  2          1.820.703.00
              <--  <--  <--  CONTINUATION
=====================================

ELM 18          1.820.710.00
    REPRODUCE AMPLIFIER, CH24                 J18
-------------------------------------
PNT SIGNAL NAME  COLOR LV TYPE             F
-------------------------------------
 1  TAPLI-24
 2  EQUAL-24
 3  SYPRE-24
 4  K-REC-24
 5  + 0.0
 6  REPRE-24
 7  REPRO-24
 8  + 0.0
 9  CA-TC-24
10  TAPDI-24
11  + 0.0
12  SYNHL-24
13  SYNHH-24
14  + 0.0
15  CA-EQL24
16  CA-SYN24
17  CA-LSW24
18  + 0.0
19  KEY
20  TA-ACT24
21  + 0.0
22  +15.0
23  -15.0
24  + 5.6
25  TA-C307K
26  CA-SAF24
27  CA-ADR-R
28  CA-ADR-S
29  CA-ADR-T
30  CA-ADR-U
31  CA-DATA0
32  CA-DATA1
33  CA-DATA2
34  CA-DATA3
35  CA-DATA4
36  CA-DATA5
37  CA-DATA6
38  CA-DATA7
39  CA-CHS24
-------------------------------------

GRP  2          1.820.703.00
              <--  <--  <--  CONTINUATION
=====================================

ELM 19          1.820.811.00
    RECORD AMPLIFIER, CH24                    J19
-------------------------------------
PNT SIGNAL NAME  COLOR LV TYPE             F
-------------------------------------
 1  RECIN-24
 2  EQUAL-24
 3  BIAFB-24
 4  K-REC-24
 5  + 0.0
 6  BIASA-24
 7  BIASB-24
 8  BIASC-24
 9  RECHL-24
10  RECHH-24
11  + 0.0
12  SYNHL-24
13  SYNHH-24
14  + 0.0
15  AFCSW-24
16  + 0.0
17  CA-BAD24
18  CA-RSW24
19  KEY
20  TA-ACT24
21  + 0.0
22  +15.0
23  -15.0
24  + 5.6
25  TA-C307K
26  CA-SAF24
27  CA-ADR-R
28  CA-ADR-S
29  CA-ADR-T
30  CA-ADR-U
31  CA-DATA0
32  CA-DATA1
33  CA-DATA2
34  CA-DATA3
35  CA-DATA4
36  CA-DATA5
37  CA-DATA6
38  CA-DATA7
39  CA-CHS24
-------------------------------------

GRP  2          1.820.703.00
              <--  <--  <--  CONTINUATION
=====================================

ELM 20          1.820.813.00
    HF-DRIVER, CH24                           J20
-------------------------------------
PNT SIGNAL NAME  COLOR LV TYPE             F
-------------------------------------
 1  BIAFB-24
 2  K-REC-24
 3  + 0.0
 4  + 0.0
 5  BIASA-24
 6  BIASB-24
 7  BIASC-24
 8
 9  ERACS-24
10  AFCSW-24
11  + 0.0
12  ERAHL-24
13  ERAHM-24
14  ERAHH-24
15  ERAHO-24
16  + 0.0
17  CA-BAD24
18  CA-RSW24
19  KEY
20  TA-ACT24
21  + 0.0
22  +15.0
23  -15.0
24  + 5.6
25  TA-C307K
26  CA-SAF24
27  CA-ADR-R
28  CA-ADR-S
29  CA-ADR-T
30  CA-ADR-U
31  CA-DATA0
32  CA-DATA1
33  CA-DATA2
34  CA-DATA3
35  CA-DATA4
36  CA-DATA5
37  CA-DATA6
38  CA-DATA7
39  CA-CHS24
-------------------------------------
```

```
*    WILLI STUDER AG    *    L O C A T I O N    P I N    L I S T          *  89/07/20  *   8:15  *  P A G E 148   *
*                            * TAPE TRANSPORT & AUDIO MCH *                *  89/04/19 - 00                       *
ASY  5                       AUDIO ELECTRONICS, CH 17 TO 24                                    <--  <--  <--  CONTINUATION

GRP  2          1.820.703.00
              <--  <--  <--  CONTINUATION
=====================================

ELM 21          1.820.717.00
    BUS CONVERTER                             J21
-------------------------------------
PNT SIGNAL NAME  COLOR LV TYPE             F
-------------------------------------
 1A TA-CLPEF
 1B TA-CLMEF
 2A T-A0P-EF
 2B T-A0N-EF
 3A S-A1P-F
 3B S-A1N-EF
 4A T-RWP-EF
 4B T-RWN-EF
 5A T-SL-EF
 5B
 6A T-DT0-EF
 6B T-DT1-EF
 7A T-DT2-EF
 7B T-DT3-EF
 8A T-DT4-EF
 8B T-DT5-EF
 9A T-DT6-EF
 9B T-DT7-EF
10A TA-CMP21
10B TA-CMP22
11A TA-CMP23
11B TA-CMP24
12A TA-ACT21
12B TA-ACT22
13A TA-ACT23
13B TA-ACT24
14A
14B
15A +15.0
15B +15.0
16A + 5.6
16B + 5.6
17A + 0.0
17B + 0.0
18A -15.0
18B -15.0
19A TA-C307K
19B
20A CA-SAF-F
20B
21A CA-ADR-R
21B CA-ADR-S
22A CA-ADR-T
22B CA-ADR-U
23A CA-DATA0
23B CA-DATA1
24A CA-DATA2

GRP  2          1.820.703.00
              <--  <--  <--  CONTINUATION
=====================================

ELM 21          1.820.717.00
              <--  <--  <--  CONTINUATION
-------------------------------------
PNT SIGNAL NAME  COLOR LV TYPE             F
-------------------------------------
24B CA-DATA3
25A CA-DATA4
25B CA-DATA5
26A CA-DATA6
26B CA-DATA7
27A + 0.0
27B + 0.0
28A CA-CHS21
28B CA-CHS22
29A CA-CHS23
29B CA-CHS24
30A + 0.0
30B + 0.0
31A
31B
32A
32B
-------------------------------------

ELM 31
    LINE INPUT/OUTPUT, CH21                   J22
-------------------------------------
PNT SIGNAL NAME  COLOR LV TYPE             F
-------------------------------------
 1  LOUFA-21
 2  LOUFB-21
 3  KEY
 4  + 0.0
 5  LINFA-21
 6  LINFB-21
 7  + 0.0
-------------------------------------
                                          ./.

GRP  2          1.820.703.00
              <--  <--  <--  CONTINUATION
=====================================

ELM 32
    NOISE REDUCTION, CH21                     J23
-------------------------------------
PNT SIGNAL NAME  COLOR LV TYPE             F
-------------------------------------
 1  CD-CAL21
 2  CD-REC21
 3  CD-REP21
 4  CD-ACT21
 5  KEY
 6  + 0.0
 7  DLBOB-21
 8  + 0.0
 9  DLBOA-21
10  + 0.0
11  DLBGN-21
12  + 0.0
13  DLBIN-21
-------------------------------------

ELM 33
    REPRODUCE PREAMPLIFIER, CH21              J24
-------------------------------------
PNT SIGNAL NAME  COLOR LV TYPE             F
-------------------------------------
 1  REPRE-21
 2  REPRO-21
 3  KEY
 4  + 0.0
-------------------------------------

ELM 34
    RECORD HEAD, CH21                         J25
-------------------------------------
PNT SIGNAL NAME  COLOR LV TYPE             F
-------------------------------------
 1  RECHL-21
 2  RECHH-21
 3  KEY
 4  + 0.0
-------------------------------------

ELM 35
    ERASE HEAD, CH21                          J26
-------------------------------------
PNT SIGNAL NAME  COLOR LV TYPE             F
-------------------------------------
 1  ERAHL-21
 2  ERAHH-21
 3  KEY
 4  ERAHO-21
-------------------------------------
```

```
*****************************************************************************************************************************
*    WILLI STUDER AG   *    L O C A T I O N     P I N     L I S T            * 89/07/20  *   8:15  *  P A G E 149   *
*****************************************************************************************************************************
*                                * TAPE TRANSPORT & AUDIO MCH *                * 89/04/19 - 00                             *
*****************************************************************************************************************************
ASY  5                          AUDIO ELECTRONICS, CH 17 TO 24                                    <--  <--  <--  CONTINUATION

GRP  2         1.820.703.00
             <--  <--  <--  CONTINUATION
=======================================

ELM 36
    LINE INPUT/OUTPUT, CH22                 J27
---------------------------------------------------
PNT SIGNAL NAME  COLOR LV TYPE               F
---------------------------------------------------
 1  LOUFA-22
 2  LOUFB-22
 3  KEY
 4  + 0.0
 5  LINFA-22
 6  LINFB-22
 7  + 0.0
---------------------------------------------------

ELM 37
    NOISE REDUCTION, CH22                   J28
---------------------------------------------------
PNT SIGNAL NAME  COLOR LV TYPE               F
---------------------------------------------------
 1  CD-CAL22
 2  CD-REC22
 3  CD-REP22
 4  CD-ACT22
 5  KEY
 6  + 0.0
 7  DLBOB-22
 8  + 0.0
 9  DLBOA-22
10  + 0.0
11  DLBGN-22
12  + 0.0
13  DLBIN-22
---------------------------------------------------

ELM 38
    REPRODUCE PREAMPLIFIER, CH22            J29
---------------------------------------------------
PNT SIGNAL NAME  COLOR LV TYPE               F
---------------------------------------------------
 1  REPRE-22
 2  REPRO-22
 3  KEY
 4  + 0.0
---------------------------------------------------
                                              ./.

GRP  2         1.820.703.00
             <--  <--  <--  CONTINUATION
=======================================

ELM 39
    RECORD HEAD, CH22                       J30
---------------------------------------------------
PNT SIGNAL NAME  COLOR LV TYPE               F
---------------------------------------------------
 1  RECHL-22
 2  RECHH-22
 3  KEY
 4  + 0.0
---------------------------------------------------

ELM 40
    ERASE HEAD, CH22                        J31
---------------------------------------------------
PNT SIGNAL NAME  COLOR LV TYPE               F
---------------------------------------------------
 1  ERAHL-22
 2  ERAHH-22
 3  KEY
 4  ERAHO-22
---------------------------------------------------

ELM 41
    LINE INPUT/OUTPUT, CH23                 J32
---------------------------------------------------
PNT SIGNAL NAME  COLOR LV TYPE               F
---------------------------------------------------
 1  LOUFA-23
 2  LOUFB-23
 3  KEY
 4  + 0.0
 5  LINFA-23
 6  LINFB-23
 7  + 0.0
---------------------------------------------------
                                              ./.

GRP  2         1.820.703.00
             <--  <--  <--  CONTINUATION
=======================================

ELM 42
    NOISE REDUCTION, CH23                   J33
---------------------------------------------------
PNT SIGNAL NAME  COLOR LV TYPE               F
---------------------------------------------------
 1  CD-CAL23
 2  CD-REC23
 3  CD-REP23
 4  CD-ACT23
 5  KEY
 6  + 0.0
 7  DLBOB-23
 8  + 0.0
 9  DLBOA-23
10  + 0.0
11  DLBGN-23
12  + 0.0
13  DLBIN-23
---------------------------------------------------

ELM 43
    REPRODUCE PREAMPLIFIER, CH23            J34
---------------------------------------------------
PNT SIGNAL NAME  COLOR LV TYPE               F
---------------------------------------------------
 1  REPRE-23
 2  REPRO-23
 3  KEY
 4  + 0.0
---------------------------------------------------

ELM 44
    RECORD HEAD, CH23                       J35
---------------------------------------------------
PNT SIGNAL NAME  COLOR LV TYPE               F
---------------------------------------------------
 1  RECHL-23
 2  RECHH-23
 3  KEY
 4  + 0.0
---------------------------------------------------

ELM 45
    ERASE HEAD, CH23                        J36
---------------------------------------------------
PNT SIGNAL NAME  COLOR LV TYPE               F
---------------------------------------------------
 1  ERAHL-23
 2  ERAHH-23
 3  KEY
 4  ERAHO-23
---------------------------------------------------
```

```
*****************************************************************************************************************************
*    WILLI STUDER AG   *    L O C A T I O N     P I N     L I S T            * 89/07/20  *   8:15  *  P A G E 150   *
*****************************************************************************************************************************
*                                * TAPE TRANSPORT & AUDIO MCH *                * 89/04/19 - 00                             *
*****************************************************************************************************************************
ASY  5                          AUDIO ELECTRONICS, CH 17 TO 24                                    <--  <--  <--  CONTINUATION

GRP  2         1.820.703.00
             <--  <--  <--  CONTINUATION
=======================================

ELM 46
    LINE INPUT/OUTPUT, CH24                 J37
---------------------------------------------------
PNT SIGNAL NAME  COLOR LV TYPE               F
---------------------------------------------------
 1  LOUFA-24
 2  LOUFB-24
 3  KEY
 4  + 0.0
 5  LINFA-24
 6  LINFB-24
 7  + 0.0
---------------------------------------------------

ELM 47
    NOISE REDUCTION, CH24                   J38
---------------------------------------------------
PNT SIGNAL NAME  COLOR LV TYPE               F
---------------------------------------------------
 1  CD-CAL24
 2  CD-REC24
 3  CD-REP24
 4  CD-ACT24
 5  KEY
 6  + 0.0
 7  DLBOB-24
 8  + 0.0
 9  DLBOA-24
10  + 0.0
11  DLBGN-24
12  + 0.0
13  DLBIN-24
---------------------------------------------------

ELM 48
    REPRODUCE PREAMPLIFIER, CH24            J39
---------------------------------------------------
PNT SIGNAL NAME  COLOR LV TYPE               F
---------------------------------------------------
 1  REPRE-24
 2  REPRO-24
 3  KEY
 4  + 0.0
---------------------------------------------------
                                              ./.

GRP  2         1.820.703.00
             <--  <--  <--  CONTINUATION
=======================================

ELM 49
    RECORD HEAD, CH24                       J40
---------------------------------------------------
PNT SIGNAL NAME  COLOR LV TYPE               F
---------------------------------------------------
 1  RECHL-24
 2  RECHH-24
 3  KEY
 4  + 0.0
---------------------------------------------------

ELM 50
    ERASE HEAD, CH24                        J41
---------------------------------------------------
PNT SIGNAL NAME  COLOR LV TYPE               F
---------------------------------------------------
 1  ERAHL-24
 2  ERAHH-24
 3  KEY
 4  ERAHO-24
---------------------------------------------------

ELM 60
    JUMPER SWITCH                           JS01
---------------------------------------------------
PNT SIGNAL NAME  COLOR LV TYPE               F
---------------------------------------------------
 1  T-A1P-EF
 2  S-A1P-F
 3  T-A1N-EF
 4  S-A1N-F
 5  T-A1P-EF
---------------------------------------------------
                                              ./.

GRP  2         1.820.703.00
             <--  <--  <--  CONTINUATION
=======================================

ELM 70
                                            P01
---------------------------------------------------
PNT SIGNAL NAME  COLOR LV TYPE               F
---------------------------------------------------
 1  + 0.0
 2  + 0.0
 3  + 5.6
 4  + 5.6
 5  +15.0
 6  -15.0
 7  TONGEN
 8  SGNGND
 9  REFLEV
10  + 0.0
11  TA-CLPEF
12  TA-CLMEF
13  + 0.0
14  T-AOP-EF
15  T-AON-EF
16  + 0.0
17  T-A1P-EF
18  T-A1N-EF
19  + 0.0
20  T-RWP-EF
21  T-RWN-EF
22  + 0.0
23  T-SL-EF
24  + 0.0
25  T-DT0-EF
26  + 0.0
27  T-DT1-EF
28  + 0.0
29  T-DT2-EF
30  + 0.0
31  T-DT3-EF
32  + 0.0
33  T-DT4-EF
34  + 0.0
35  T-DT5-EF
36  + 0.0
37  T-DT6-EF
38  + 0.0
39  T-DT7-EF
40  + 0.0
---------------------------------------------------
```

```
*****************************************************************************************************************************
*   WILLI STUDER AG   *   L O C A T I O N     P I N     L I S T           * 89/07/20 *   8:15 *   P A G E 151   *
*****************************************************************************************************************************
*                         * TAPE TRANSPORT & AUDIO MCH *                   * 89/04/19 - 00                                 *
*****************************************************************************************************************************
ASY  5                    AUDIO ELECTRONICS, CH 17 TO 24                                  <--  <--  <--  CONTINUATION

GRP  3        1.820.778.00
   DISTRIBUTION BOARD          AUDIO RACK
=======================================

ELM  1
   SUPPLY PREAMPLIFIER CH 9 TO 16    J01
---------------------------------------
PNT SIGNAL NAME  COLOR LV TYPE          F
---------------------------------------
 1  + 5.6
 2  GND
 3  + 0.0
 4  +15.0
 5  -15.0
 6  KEY
---------------------------------------

ELM  2
   SUPPLY ASY05, GRP01               J02
---------------------------------------
PNT SIGNAL NAME  COLOR LV TYPE          F
---------------------------------------
 1  + 5.6                  BX
 2                         BX
 3  + 0.0                  BX
 4  + 0.0                  BX
 5  +15.0                  BX
 6  +15.0                  BX
 7  -15.0                  BX
 8  -15.0                  BX
 9  RESERVE                BX
10  +24.0NRS               BX
---------------------------------------

ELM  3
   SUPPLY ASY05, GRP02               J03
---------------------------------------
PNT SIGNAL NAME  COLOR LV TYPE          F
---------------------------------------
 1  + 5.6                  BX
 2                         BX
 3  + 0.0                  BX
 4  + 0.0                  BX
 5  +15.0                  BX
 6  +15.0                  BX
 7  -15.0                  BX
 8  -15.0                  BX
 9  RESERVE                BX
10  +24.0NRS               BX
---------------------------------------
                                    ./.

GRP  3        1.820.778.00
                 <--  <--  <--  CONTINUATION
=======================================

ELM  4
   SUPPLY CONNECTOR                  J04
---------------------------------------
PNT SIGNAL NAME  COLOR LV TYPE          F
---------------------------------------
 1  + 5.6                  BX
 2                         BX
 3  + 0.0                  BX
 4  + 0.0                  BX
 5  +15.0                  BX
 6                         BX
 7  -15.0                  BX
 8                         BX
 9  RESERVE                BX
10  +24.0NRS               BX
---------------------------------------

ELM  5
   SUPPLY ASY05, GRP04 (NRS OPTION)  J05
---------------------------------------
PNT SIGNAL NAME  COLOR LV TYPE          F
---------------------------------------
 1  + 5.6                  BX
 2                         BX
 3  + 0.0                  BX
 4  + 0.0                  BX
 5  +15.0                  BX
 6  +15.0                  BX
 7  -15.0                  BX
 8  -15.0                  BX
 9  RESERVE                BX
10  +24.0NRS               BX
---------------------------------------

GRP  4        1.820.809.00
   BASISBOARD, NRS OPTION    CH 17 TO 24
=======================================

ELM  1
   NOISE REDUCTION UNIT CH17         J01
---------------------------------------
PNT SIGNAL NAME  COLOR LV TYPE          F
---------------------------------------
 1
 1A
 2
 2B
 3  CD-CAL17
 3C
 4  DLBOA-17
 4D
 5  KEY
 5E KEY
 6
 6F
 7
 7H
 8
 8J
 9
 9K
10  DLBIN-17
10L
11
11M
12  CD-ACT17
12N
13
13P
14
14R
15  +24.0NRS
15S
16  + 0.0
16T + 0.0
---------------------------------------

ELM  2
   NOISE REDUCTION UNIT CH18         J02
---------------------------------------
PNT SIGNAL NAME  COLOR LV TYPE          F
---------------------------------------
---------------------------------------

ELM  3
   NOISE REDUCTION UNIT CH19         J03
---------------------------------------
PNT SIGNAL NAME  COLOR LV TYPE          F
---------------------------------------
```

```
*****************************************************************************************************************************
*   WILLI STUDER AG   *   L O C A T I O N     P I N     L I S T           * 89/07/20 *   8:15 *   P A G E 152   *
*****************************************************************************************************************************
*                         * TAPE TRANSPORT & AUDIO MCH *                   * 89/04/19 - 00                                 *
*****************************************************************************************************************************
ASY  5                    AUDIO ELECTRONICS, CH 17 TO 24                                  <--  <--  <--  CONTINUATION

GRP  4        1.820.809.00
                 <--  <--  <--  CONTINUATION
=======================================

ELM  4
   NOISE REDUCTION UNIT CH20         J04
---------------------------------------
PNT SIGNAL NAME  COLOR LV TYPE          F
---------------------------------------
---------------------------------------

ELM  5
   NOISE REDUCTION UNIT CH21         J05
---------------------------------------
PNT SIGNAL NAME  COLOR LV TYPE          F
---------------------------------------
---------------------------------------

ELM  6
   NOISE REDUCTION UNIT CH22         J06
---------------------------------------
PNT SIGNAL NAME  COLOR LV TYPE          F
---------------------------------------
---------------------------------------

ELM  7
   NOISE REDUCTION UNIT CH23         J07
---------------------------------------
PNT SIGNAL NAME  COLOR LV TYPE          F
---------------------------------------
---------------------------------------

ELM  8
   NOISE REDUCTION UNIT CH24         J08
---------------------------------------
PNT SIGNAL NAME  COLOR LV TYPE          F
---------------------------------------
---------------------------------------
                                    ./.

GRP  4        1.820.809.00
                 <--  <--  <--  CONTINUATION
=======================================

ELM 11
   TO GRP01, ELM32 (AUDIO BASIS B.)  P01
---------------------------------------
PNT SIGNAL NAME  COLOR LV TYPE          F
---------------------------------------
 1  CD-CAL17               D
 2  CD-REC17               D
 3  CD-REP17               D
 4  CD-ACT17               D
 5  KEY
 6  + 0.0                  D
 7  DLBOB-17               D
 8  + 0.0                  D
 9  DLBOA-17               D
10  + 0.0                  D
11  DLBGN-17               D
12  + 0.0                  D
13  DLBIN-17               D
---------------------------------------

ELM 12
   TO GRP01, ELM37 (AUDIO BASIS B.)  P02
---------------------------------------
PNT SIGNAL NAME  COLOR LV TYPE          F
---------------------------------------
 1  CD-CAL18               D
 2  CD-REC18               D
 3  CD-REP18               D
 4  CD-ACT18               D
 5  KEY
 6  + 0.0                  D
 7  DLBOB-18               D
 8  + 0.0                  D
 9  DLBOA-18               D
10  + 0.0                  D
11  DLBGN-18               D
12  + 0.0                  D
13  DLBIN-18               D
---------------------------------------

GRP  4        1.820.809.00
                 <--  <--  <--  CONTINUATION
=======================================

ELM 13
   TO GRP01, ELM42 (AUDIO BASIS B.)  P03
---------------------------------------
PNT SIGNAL NAME  COLOR LV TYPE          F
---------------------------------------
 1  CD-CAL19               D
 2  CD-REC19               D
 3  CD-REP19               D
 4  CD-ACT19               D
 5  KEY
 6  + 0.0                  D
 7  DLBOB-19               D
 8  + 0.0                  D
 9  DLBOA-19               D
10  + 0.0                  D
11  DLBGN-19               D
12  + 0.0                  D
13  DLBIN-19               D
---------------------------------------

ELM 14
   TO GRP01, ELM47 (AUDIO BASIS B.)  P04
---------------------------------------
PNT SIGNAL NAME  COLOR LV TYPE          F
---------------------------------------
 1  CD-CAL20               D
 2  CD-REC20               D
 3  CD-REP20               D
 4  CD-ACT20               D
 5  KEY
 6  + 0.0                  D
 7  DLBOB-20               D
 8  + 0.0                  D
 9  DLBOA-20               D
10  + 0.0                  D
11  DLBGN-20               D
12  + 0.0                  D
13  DLBIN-20               D
---------------------------------------
```

WILLI STUDER AG * L O C A T I O N P I N L I S T * 89/07/20 * 8:15 * P A G E 153
* TAPE TRANSPORT & AUDIO MCH * * 89/04/19 - 00

ASY 5 AUDIO ELECTRONICS, CH 17 TO 24 <-- <-- <-- CONTINUATION

GRP 4 1.820.809.00 <-- <-- <-- CONTINUATION

ELM 15
TO GRP02, ELM32 (AUDIO BASIS B.) P05

PNT	SIGNAL NAME	COLOR LV TYPE	F
1	CD-CAL21	D	
2	CD-REC21	D	
3	CD-REP21	D	
4	CD-ACT21	D	
5	KEY		
6	+ 0.0	D	
7	DLB0B-21	D	
8	+ 0.0	D	
9	DLB0A-21	D	
10	+ 0.0	D	
11	DLBGN-21	D	
12	+ 0.0	D	
13	DLBIN-21	D	

ELM 16
TO GRP02, ELM37 (AUDIO BASIS B.) P06

PNT	SIGNAL NAME	COLOR LV TYPE	F
1	CD-CAL22	D	
2	CD-REC22	D	
3	CD-REP22	D	
4	CD-ACT22	D	
5	KEY		
6	+ 0.0	D	
7	DLB0B-22	D	
8	+ 0.0	D	
9	DLB0A-22	D	
10	+ 0.0	D	
11	DLBGN-22	D	
12	+ 0.0	D	
13	DLBIN-22	D	

GRP 4 1.820.809.00 <-- <-- <-- CONTINUATION

ELM 17
TO GRP02, ELM42 (AUDIO BASIS B.) P07

PNT	SIGNAL NAME	COLOR LV TYPE	F
1	CD-CAL23	D	
2	CD-REC23	D	
3	CD-REP23	D	
4	CD-ACT23	D	
5	KEY		
6	+ 0.0	D	
7	DLB0B-23	D	
8	+ 0.0	D	
9	DLB0A-23	D	
10	+ 0.0	D	
11	DLBGN-23	D	
12	+ 0.0	D	
13	DLBIN-23	D	

ELM 18
TO GRP02, ELM47 (AUDIO BASIS B.) P08

PNT	SIGNAL NAME	COLOR LV TYPE	F
1	CD-CAL24	D	
2	CD-REC24	D	
3	CD-REP24	D	
4	CD-ACT24	D	
5	KEY		
6	+ 0.0	D	
7	DLB0B-24	D	
8	+ 0.0	D	
9	DLB0A-24	D	
10	+ 0.0	D	
11	DLBGN-24	D	
12	+ 0.0	D	
13	DLBIN-24	D	

GRP 4 1.820.809.00 <-- <-- <-- CONTINUATION

ELM 19
FROM GRP03, ELM05 (DISTR. B) P09

PNT	SIGNAL NAME	COLOR LV TYPE	F
1	+ 5.6	AX	
2		AX	
3	+ 0.0	AX	
4	+ 0.0	AX	
5	+15.0	AX	
6	+15.0	AX	
7	-15.0	AX	
8	-15.0	AX	
9	RESERVE	AX	
10	+24.0NRS	AX	

WILLI STUDER AG * L O C A T I O N P I N L I S T * 89/07/20 * 8:15 * P A G E 154
* TAPE TRANSPORT & AUDIO MCH * * 89/04/19 - 00

ASY 5 AUDIO ELECTRONICS, CH 17 TO 24 <-- <-- <-- CONTINUATION

GRP 11 1.820.863.00
LINE INPUTS, CH 17 TO 24

ELM 1
LINE INPUT, CH17 XLR J01

PNT	SIGNAL NAME	COLOR LV TYPE	F
1	+ 0.0		
2	LINSA-17		
3	LINSB-17		

ELM 2
LINE INPUT, CH18 XLR J02

PNT	SIGNAL NAME	COLOR LV TYPE	F
1	+ 0.0		
2	LINSA-18		
3	LINSB-18		

ELM 3
LINE INPUT, CH19 XLR J03

PNT	SIGNAL NAME	COLOR LV TYPE	F
1	+ 0.0		
2	LINSA-19		
3	LINSB-19		

ELM 4
LINE INPUT, CH20 XLR J04

PNT	SIGNAL NAME	COLOR LV TYPE	F
1	+ 0.0		
2	LINSA-20		
3	LINSB-20		

ELM 5
LINE INPUT, CH21 XLR J05

PNT	SIGNAL NAME	COLOR LV TYPE	F
1	+ 0.0		
2	LINSA-21		
3	LINSB-21		

GRP 11 1.820.863.00 <-- <-- <-- CONTINUATION

ELM 6
LINE INPUT, CH22 XLR J06

PNT	SIGNAL NAME	COLOR LV TYPE	F
1	+ 0.0		
2	LINSA-22		
3	LINSB-22		

ELM 7
LINE INPUT, CH23 XLR J07

PNT	SIGNAL NAME	COLOR LV TYPE	F
1	+ 0.0		
2	LINSA-23		
3	LINSB-23		

ELM 8
LINE INPUT, CH24 XLR J08

PNT	SIGNAL NAME	COLOR LV TYPE	F
1	+ 0.0		
2	LINSA-24		
3	LINSB-24		

./.

GRP 11 1.820.863.00 <-- <-- <-- CONTINUATION

ELM 9
LINE INPUTS, CH19 TO 24 P01

PNT	SIGNAL NAME	COLOR LV TYPE	F
1	LINFA-24		
2	+ 0.0		
3	LINFA-23		
4	LINFA-22		
5	+ 0.0		
6	LINFA-21		
7	LINFA-20		
8	+ 0.0		
9	LINFA-19		
10	LINFA-18		
11	+ 0.0		
12	LINFA-17		
13	+ 0.0		
14	LINFB-24		
15	+ 0.0		
16	LINFB-23		
17	LINFB-22		
18	+ 0.0		
19	LINFB-21		
20	LINFB-20		
21	+ 0.0		
22	LINFB-19		
23	LINFB-18		
24	+ 0.0		
25	LINFB-17		

```
*    WILLI STUDER AG   *    L O C A T I O N     P I N     L I S T            * 89/07/20  *   8:15  *   P A G E 155   *
*                                * TAPE TRANSPORT & AUDIO MCH *                * 89/04/19 - 00                          *
ASY  5                          AUDIO ELECTRONICS, CH 17 TO 24                                    <--  <--  <--  CONTINUATION

GRP 14          1.820.864.00
    LINE OUTPUTS, CH 17 TO 24
=========================================

ELM  1
    LINE OUTPUT, CH17                    XLR P01
-----------------------------------------
PNT SIGNAL NAME   COLOR LV TYPE            F
-----------------------------------------
 1  + 0.0
 2  LOUSA-17
 3  LOUSB-17
-----------------------------------------

ELM  2
    LINE OUTPUT, CH18                    XLR P02
-----------------------------------------
PNT SIGNAL NAME   COLOR LV TYPE            F
-----------------------------------------
 1  + 0.0
 2  LOUSA-18
 3  LOUSB-18
-----------------------------------------

ELM  3
    LINE OUTPUT, CH19                    XLR P03
-----------------------------------------
PNT SIGNAL NAME   COLOR LV TYPE            F
-----------------------------------------
 1  + 0.0
 2  LOUSA-19
 3  LOUSB-19
-----------------------------------------

ELM  4
    LINE OUTPUT, CH20                    XLR P04
-----------------------------------------
PNT SIGNAL NAME   COLOR LV TYPE            F
-----------------------------------------
 1  + 0.0
 2  LOUSA-20
 3  LOUSB-20
-----------------------------------------

ELM  5
    LINE OUTPUT, CH21                    XLR P05
-----------------------------------------
PNT SIGNAL NAME   COLOR LV TYPE            F
-----------------------------------------
 1  + 0.0
 2  LOUSA-21
 3  LOUSB-21
-----------------------------------------

GRP 14          1.820.864.00
                          <--  <--  <--  CONTINUATION
=========================================

ELM  6
    LINE OUTPUT, CH22                    XLR P06
-----------------------------------------
PNT SIGNAL NAME   COLOR LV TYPE            F
-----------------------------------------
 1  + 0.0
 2  LOUSA-22
 3  LOUSB-22
-----------------------------------------

ELM  7
    LINE OUTPUT, CH23                    XLR P07
-----------------------------------------
PNT SIGNAL NAME   COLOR LV TYPE            F
-----------------------------------------
 1  + 0.0
 2  LOUSA-23
 3  LOUSB-23
-----------------------------------------

ELM  8
    LINE OUTPUT, CH24                    XLR P08
-----------------------------------------
PNT SIGNAL NAME   COLOR LV TYPE            F
-----------------------------------------
 1  + 0.0
 2  LOUSA-24
 3  LOUSB-24
-----------------------------------------
                                           ./.

GRP 14          1.820.864.00
                          <--  <--  <--  CONTINUATION
=========================================

ELM  9
    LINE OUTPUTS, CH19 TO 24             P09
-----------------------------------------
PNT SIGNAL NAME   COLOR LV TYPE            F
-----------------------------------------
 1  LOUFA-24
 2  + 0.0
 3  LOUFA-23
 4  LOUFA-22
 5  + 0.0
 6  LOUFA-21
 7  LOUFA-20
 8  + 0.0
 9  LOUFA-19
10  LOUFA-18
11  + 0.0
12  LOUFA-17
13  + 0.0
14  LOUFB-24
15  + 0.0
16  LOUFB-23
17  LOUFB-22
18  + 0.0
19  LOUFB-21
20  LOUFB-20
21  + 0.0
22  LOUFB-19
23  LOUFB-18
24  + 0.0
25  LOUFB-17
-----------------------------------------
```

```
*    WILLI STUDER AG   *    L O C A T I O N     P I N     L I S T            * 89/07/20  *   8:15  *   P A G E 156   *
*                                * TAPE TRANSPORT & AUDIO MCH *                * 89/04/19 - 00                          *
ASY  6          1.820.620.00  VU PANEL 24 CH

GRP  1          1.820.705.00
    BASIS BOARD                          VU PANEL
=========================================

ELM  1
    CONNECTOR MPU VU PANEL MCH           J01
-----------------------------------------
PNT SIGNAL NAME   COLOR LV TYPE            F
-----------------------------------------
 1
 2
 3  TP-SL3
 4  TP-SL2
 5  TP-RESMP
 6  TP-ADR3
 7  TP-C614K
 8  TP-BUSSW
 9  TP-NMI
10  TP-RX
11  TP-TX
12  TP-DRENB
13  TP-IRQ
14  TP-PWRON
15  TP-SL7
16  TP-C76K
17  TP-C9600
18  +15.0
19  KEY
20  + 5.6
21  + 0.0
22  TP-C307K
23  TP-SL4
24  TP-SL5
25  TP-SL6
26  TP-RESET
27  TP-RW
28  TP-ENB
29  TP-ADR2
30  TP-ADR1
31  TP-ADR0
32  TP-DATA7
33  TP-DATA6
34  TP-DATA5
35  TP-DATA4
36  TP-DATA3
37  TP-DATA2
38  TP-DATA1
39  TP-DATA0
-----------------------------------------

GRP  1          1.820.705.00
                          <--  <--  <--  CONTINUATION
=========================================

ELM  2
    SERVICE BOARD                        J02
-----------------------------------------
PNT SIGNAL NAME   COLOR LV TYPE            F
-----------------------------------------
 1
 2
 3  TP-SL3
 4  TP-SL2
 5  TP-RESMP
 6  TP-ADR3
 7  TP-C614K
 8  TP-BUSSW
 9  TP-NMI
10  TP-RX
11  TP-TX
12  TP-DRENB
13  TP-IRQ
14  TP-PWRON
15  TP-SL7
16  TP-C76K
17  TP-C9600
18  +15.0
19  KEY
20  + 5.6
21  + 0.0
22  TP-C307K
23  TP-SL4
24  TP-SL5
25  TP-SL6
26  TP-RESET
27  TP-RW
28  TP-ENB
29  TP-ADR2
30  TP-ADR1
31  TP-ADR0
32  TP-DATA7
33  TP-DATA6
34  TP-DATA5
35  TP-DATA4
36  TP-DATA3
37  TP-DATA2
38  TP-DATA1
39  TP-DATA0
-----------------------------------------

GRP  1          1.820.705.00
                          <--  <--  <--  CONTINUATION
=========================================

ELM  3
    CONNECTOR LCD DISPLAY                P03
-----------------------------------------
PNT SIGNAL NAME   COLOR LV TYPE            F
-----------------------------------------
 1  + 0.0
 2  + 5.6
 3  T-MOD6
 4  T-DENB
 5  T-KBWR
 6  T-MOD7
 7  T-KBD0
 8  T-KBD1
 9  T-KBD2
10  T-KBD3
11  T-KBD4
12  T-KBD5
13  T-KBD6
14  T-KBD7
15  T-DRESET
16  + 0.0
-----------------------------------------
                                           ./.
```

```
*****************************************************************************************************************************
*    WILLI STUDER AG   *    L O C A T I O N     P I N     L I S T            *  89/07/20  *   8:15  *  P A G E 157   *
*****************************************************************************************************************************
*                                 * TAPE TRANSPORT & AUDIO MCH *                *  89/04/19 - 00                          *
*****************************************************************************************************************************
ASY  6         1.820.620.00  VU PANEL 24 CH                                                    <--  <--  <--  CONTINUATION

GRP  1         1.820.705.00
              <--  <--  <--  CONTINUATION
=======================================

ELM  4
    KEYBOARD DRIVER, MASTER                                   P04
---------------------------------------------------------------
PNT SIGNAL NAME  COLOR LV TYPE                                 F
---------------------------------------------------------------
 1  + 0.0
 2  + 0.0
 3  + 5.6
 4  + 5.6
 5  T-KBA0
 6  T-KBA1
 7  T-KBA2
 8  T-MOD4
 9  T-MOD5
10
11  T-KBWR
12  T-KBSL4
13  T-KBSL5
14
15  T-KBD0
16  T-KBD1
17  T-KBD2
18  T-KBD3
19  T-KBD4
20  T-KBD5
21  T-KBD6
22  T-KBD7
23  + 5.6
24  + 5.6
25  + 0.0
26  + 0.0
---------------------------------------
                                                          ./.

GRP  1         1.820.705.00
              <--  <--  <--  CONTINUATION
=======================================

ELM  5
    CONNECTOR BARGRAPHS                                       P05
---------------------------------------------------------------
PNT SIGNAL NAME  COLOR LV TYPE                                 F
---------------------------------------------------------------
 1  + 0.0
 2  + 0.0
 3  + 5.6
 4  + 5.6
 5  + 0.0
 6  + 0.0
 7  + 5.6
 8  + 5.6
 9  T-B6D0
10  T-B6D1
11  T-B6D2
12  T-B6D3
13  T-B6D4
14  T-B6D5
15  T-B6D6
16  T-B6D7
17  T-B6WR
18  T-B6SL1
19  T-B6SL2
20  T-B6SL3
21  + 0.0
22  + 0.0
23  + 5.6
24  + 5.6
25  + 0.0
26  + 0.0
---------------------------------------
                                                          ./.

GRP  1         1.820.705.00
              <--  <--  <--  CONTINUATION
=======================================

ELM  6
    CH CONTROL KEYBOARD DRIVER                                P06
---------------------------------------------------------------
PNT SIGNAL NAME  COLOR LV TYPE                                 F
---------------------------------------------------------------
 1  + 0.0
 2  + 0.0
 3  + 5.6
 4  + 5.6
 5  T-KBA0
 6  T-KBA1
 7  T-KBA2
 8  T-MOD1
 9  T-MOD2
10  T-MOD3
11  T-KBWR
12  T-KBSL1
13  T-KBSL2
14  T-KBSL3
15  T-KBD0
16  T-KBD1
17  T-KBD2
18  T-KBD3
19  T-KBD4
20  T-KBD5
21  T-KBD6
22  T-KBD7
23  + 5.6
24  + 5.6
25  + 0.0
26  + 0.0
---------------------------------------

ELM  7
    CONNECTOR DC CONVERTER                                    P07
---------------------------------------------------------------
PNT SIGNAL NAME  COLOR LV TYPE                                 F
---------------------------------------------------------------
 1
 2
 3
 4
 5
 6
---------------------------------------
```

```
*****************************************************************************************************************************
*    WILLI STUDER AG   *    L O C A T I O N     P I N     L I S T            *  89/07/20  *   8:15  *  P A G E 158   *
*****************************************************************************************************************************
*                                 * TAPE TRANSPORT & AUDIO MCH *                *  89/04/19 - 00                          *
*****************************************************************************************************************************
ASY  6         1.820.620.00  VU PANEL 24 CH                                                    <--  <--  <--  CONTINUATION

GRP  1         1.820.705.00
              <--  <--  <--  CONTINUATION
=======================================

ELM  8
                                                          P08/P09
---------------------------------------------------------------
PNT SIGNAL NAME  COLOR LV TYPE                                 F
---------------------------------------------------------------
 1  PNLBUS1
 2  PNLBUS2
---------------------------------------

GRP  2         1.820.783.00
    MPU VU PANEL MCH
=======================================

ELM  1
                                                          P01
---------------------------------------------------------------
PNT SIGNAL NAME  COLOR LV TYPE                                 F
---------------------------------------------------------------
 1
 2
 3  TP-SL3
 4  TP-SL2
 5  TP-RESMP
 6  TP-ADR3
 7  TP-C614K
 8  TP-BUSSW
 9  TP-NMI
10  TP-RX
11  TP-TX
12  TP-DRENB
13  TP-IRQ
14  TP-PWRON
15  TP-SL7
16  TP-C76K
17  TP-C9600
18  +15.0
19  KEY
20  + 5.6
21  + 0.0
22  TP-C307K
23  TP-SL4
24  TP-SL5
25  TP-SL6
26  TP-RESET
27  TP-RW
28  TP-ENB
29  TP-ADR2
30  TP-ADR1
31  TP-ADR0
32  TP-DATA7
33  TP-DATA6
34  TP-DATA5
35  TP-DATA4
36  TP-DATA3
37  TP-DATA2
38  TP-DATA1
39  TP-DATA0
---------------------------------------

GRP  3
    SERVICE BOARD
=======================================

ELM  1
                                                          P01
---------------------------------------------------------------
PNT SIGNAL NAME  COLOR LV TYPE                                 F
---------------------------------------------------------------
 1
 2
 3  TP-SL3
 4  TP-SL2
 5  TP-RESMP
 6  TP-ADR3
 7  TP-C614K
 8  TP-BUSSW
 9  TP-NMI
10  TP-RX
11  TP-TX
12  TP-DRENB
13  TP-IRQ
14  TP-PWRON
15  TP-SL7
16  TP-C76K
17  TP-C9600
18  +15.0
19  KEY
20  + 5.6
21  + 0.0
22  TP-C307K
23  TP-SL4
24  TP-SL5
25  TP-SL6
26  TP-RESET
27  TP-RW
28  TP-ENB
29  TP-ADR2
30  TP-ADR1
31  TP-ADR0
32  TP-DATA7
33  TP-DATA6
34  TP-DATA5
35  TP-DATA4
36  TP-DATA3
37  TP-DATA2
38  TP-DATA1
39  TP-DATA0
---------------------------------------
```

```
*****************************************************************************************************************************
*    WILLI STUDER AG    *    L O C A T I O N     P I N     L I S T          *  89/07/20  *   8:15  *   P A G E 159    *
*****************************************************************************************************************************
*                                 * TAPE TRANSPORT & AUDIO MCH *                *  89/04/19 - 00                          *
*****************************************************************************************************************************
ASY  6         1.820.620.00  VU PANEL 24 CH                                                    <--  <--  <--  CONTINUATION

GRP  4         1.820.706.00
     DC CONVERTER 5.6 V
=======================================

ELM  1
     CONNECTOR POWER INPUT
---------------------------------------
PNT SIGNAL NAME   COLOR LV TYPE          F
---------------------------------------
  1  +STABIN4                Y
  2  OSTABIN                 Y
---------------------------------------

ELM  2
     DC OUTPUT
---------------------------------------
PNT SIGNAL NAME   COLOR LV TYPE          F
---------------------------------------
  1  +SENS          4         F
  2  + 5.6          3         F
  3  + 0.0          0         F
  4  OSENS          5         F
  5  + 5.6          3         F
  6  + 0.0          0         F
---------------------------------------

GRP  5         1.820.709.00
     KEYBOARD DRIVER, CH 01 TO 08
=======================================

ELM  1
     BUS                                                                        P01
---------------------------------------
PNT SIGNAL NAME   COLOR LV TYPE          F
---------------------------------------
  1  + 0.0
  2  + 0.0
  3  + 5.6
  4  + 5.6
  5  T-KBA0
  6  T-KBA1
  7  T-KBA2
  8  T-MOD1
  9  T-MOD2
 10  T-MOD3
 11  T-KBWR
 12  T-KBSL1
 13  T-KBSL2
 14  T-KBSL3
 15  T-KBD0
 16  T-KBD1
 17  T-KBD2
 18  T-KBD3
 19  T-KBD4
 20  T-KBD5
 21  T-KBD6
 22  T-KBD7
 23  + 5.6
 24  + 5.6
 25  + 0.0
 26  + 0.0
---------------------------------------
                                                                          ./.

GRP  5         1.820.709.00
                                                  <--  <--  <--  CONTINUATION
=======================================

ELM  2
     KEYBOARD                                                                   P02
---------------------------------------
PNT SIGNAL NAME   COLOR LV TYPE          F
---------------------------------------
  1  LDRW0-A
  2  LDRW1-A
  3  LDRW2-A
  4  LDRW3-A
  5  LDRW4-A
  6  LDRW5-A
  7  LDCLN7-A
  8  KCLN7-A
  9  LDCLN6-A
 10  KCLN6-A
 11  LDCLN5-A
 12  KCLN5-A
 13  LDCLN4-A
 14
 15  KCLN4-A
 16  + 0.0
 17  LDCLN3-A
 18  KCLN3-A
 19  LDCLN2-A
 20  KCLN2-A
 21  LDCLN1-A
 22  KCLN1-A
 23  LDCLN0-A
 24  KCLN0-A
 25  KRW4-A
 26  KRW3-A
 27  KRW2-A
 28  KRW1-A
 29  KRW0-A
 30  + 5.0
---------------------------------------
```

```
*****************************************************************************************************************************
*    WILLI STUDER AG    *    L O C A T I O N     P I N     L I S T          *  89/07/20  *   8:15  *   P A G E 160    *
*****************************************************************************************************************************
*                                 * TAPE TRANSPORT & AUDIO MCH *                *  89/04/19 - 00                          *
*****************************************************************************************************************************
ASY  6         1.820.620.00  VU PANEL 24 CH                                                    <--  <--  <--  CONTINUATION

GRP  6         1.820.709.00
     KEYBOARD DRIVER, CH 09 TO 16
=======================================

ELM  1
     BUS                                                                        P01
---------------------------------------
PNT SIGNAL NAME   COLOR LV TYPE          F
---------------------------------------
  1  + 0.0
  2  + 0.0
  3  + 5.6
  4  + 5.6
  5  T-KBA0
  6  T-KBA1
  7  T-KBA2
  8  T-MOD1
  9  T-MOD2
 10  T-MOD3
 11  T-KBWR
 12  T-KBSL1
 13  T-KBSL2
 14  T-KBSL3
 15  T-KBD0
 16  T-KBD1
 17  T-KBD2
 18  T-KBD3
 19  T-KBD4
 20  T-KBD5
 21  T-KBD6
 22  T-KBD7
 23  + 5.6
 24  + 5.6
 25  + 0.0
 26  + 0.0
---------------------------------------
                                                                          ./.

GRP  6         1.820.709.00
                                                  <--  <--  <--  CONTINUATION
=======================================

ELM  2
     KEYBOARD                                                                   P02
---------------------------------------
PNT SIGNAL NAME   COLOR LV TYPE          F
---------------------------------------
  1  LDRW0-C
  2  LDRW1-C
  3  LDRW2-C
  4  LDRW3-C
  5  LDRW4-C
  6  LDRW5-C
  7  LDCLN7-C
  8  KCLN7-C
  9  LDCLN6-C
 10  KCLN6-C
 11  LDCLN5-C
 12  KCLN5-C
 13  LDCLN4-C
 14
 15  KCLN4-C
 16  + 0.0
 17  LDCLN3-C
 18  KCLN3-C
 19  LDCLN2-C
 20  KCLN2-C
 21  LDCLN1-C
 22  KCLN1-C
 23  LDCLN0-C
 24  KCLN0-C
 25  KRW4-C
 26  KRW3-C
 27  KRW2-C
 28  KRW1-C
 29  KRW0-C
 30  + 5.0
---------------------------------------

GRP  7         1.820.709.00
     KEYBOARD DRIVER, CH 17 TO 24
=======================================

ELM  1
     BUS                                                                        P01
---------------------------------------
PNT SIGNAL NAME   COLOR LV TYPE          F
---------------------------------------
  1  + 0.0
  2  + 0.0
  3  + 5.6
  4  + 5.6
  5  T-KBA0
  6  T-KBA1
  7  T-KBA2
  8  T-MOD1
  9  T-MOD2
 10  T-MOD3
 11  T-KBWR
 12  T-KBSL1
 13  T-KBSL2
 14  T-KBSL3
 15  T-KBD0
 16  T-KBD1
 17  T-KBD2
 18  T-KBD3
 19  T-KBD4
 20  T-KBD5
 21  T-KBD6
 22  T-KBD7
 23  + 5.6
 24  + 5.6
 25  + 0.0
 26  + 0.0
---------------------------------------
                                                                          ./.
```

```
*****************************************************************************************************************************
*   WILLI STUDER AG   *   L O C A T I O N   P I N   L I S T   * 89/07/20 *  8:15 *  P A G E 161  *
*****************************************************************************************************************************
*                          * TAPE TRANSPORT & AUDIO MCH *                   * 89/04/19 - 00                                 *
*****************************************************************************************************************************
ASY  6        1.820.620.00  VU PANEL 24 CH                                                    <--  <--  <--  CONTINUATION

GRP  7        1.820.709.00                    GRP  8        1.820.709.00                    GRP  8        1.820.709.00
             <--  <--  <--  CONTINUATION          KEYBOARD DRIVER, MASTER                          <--  <--  <--  CONTINUATION
=======================================    =======================================    =======================================

ELM  2                                     ELM  1                                     ELM  2
   KEYBOARD                        P02        BUS                             P01        KEYBOARD MASTER                 J01
---------------------------------------    ---------------------------------------    ---------------------------------------
PNT SIGNAL NAME  COLOR LV TYPE       F     PNT SIGNAL NAME  COLOR LV TYPE       F     PNT SIGNAL NAME  COLOR LV TYPE       F
---------------------------------------    ---------------------------------------    ---------------------------------------
 1  LDRW0-E                                 1  + 0.0                                   1  LDRW0-G
 2  LDRW1-E                                 2  + 0.0                                   2  LDRW1-G
 3  LDRW2-E                                 3  + 5.6                                   3  LDRW2-G
 4  LDRW3-E                                 4  + 5.6                                   4  LDRW3-G
 5  LDRW4-E                                 5  T-KBA0                                  5  LDRW4-G
 6  LDRW5-E                                 6  T-KBA1                                  6  LDRW5-G
 7  LDCLN7-E                                7  T-KBA2                                  7  LDCLN7-G
 8  KCLN7-E                                 8  T-MOD4                                  8  KCLN7-G
 9  LDCLN6-E                                9  T-MOD5                                  9  LDCLN6-G
10  KCLN6-E                                10                                         10  KCLN6-G
11  LDCLN5-E                               11  T-KBWR                                 11  LDCLN5-G
12  KCLN5-E                                12  T-KBSL4                                12  KCLN5-G
13  LDCLN4-E                               13  T-KBSL5                                13  LDCLN4-G
14                                         14                                         14
15  KCLN4-E                                15  T-KBD0                                 15  KCLN4-G
16  + 0.0                                  16  T-KBD1                                 16  + 0.0
17  LDCLN3-E                               17  T-KBD2                                 17  LDCLN3-G
18  KCLN3-E                                18  T-KBD3                                 18  KCLN3-G
19  LDCLN2-E                               19  T-KBD4                                 19  LDCLN2-G
20  KCLN2-E                                20  T-KBD5                                 20  KCLN2-G
21  LDCLN1-E                               21  T-KBD6                                 21  LDCLN1-G
22  KCLN1-E                                22  T-KBD7                                 22  KCLN1-G
23  LDCLN0-E                               23  + 5.6                                  23  LDCLN0-G
24  KCLN0-E                                24  + 5.6                                  24  KCLN0-G
25  KRW4-E                                 25  + 0.0                                  25  KRW4-G
26  KRW3-E                                 26  + 0.0                                  26  KRW3-G
27  KRW2-E                                 ---------------------------------------    27  KRW2-G
28  KRW1-E                                                                  ./.       28  KRW1-G
29  KRW0-E                                                                            29  KRW0-G
30  + 5.0                                                                             30  + 5.0
---------------------------------------                                               ---------------------------------------
```

```
*****************************************************************************************************************************
*   WILLI STUDER AG   *   L O C A T I O N   P I N   L I S T   * 89/07/20 *  8:15 *  P A G E 162  *
*****************************************************************************************************************************
*                          * TAPE TRANSPORT & AUDIO MCH *                   * 89/04/19 - 00                                 *
*****************************************************************************************************************************
ASY  6        1.820.620.00  VU PANEL 24 CH                                                    <--  <--  <--  CONTINUATION

GRP  9        1.820.708.00                    GRP 10        1.820.708.00                    GRP 11        1.820.708.00
   CH CONTROL KEYBOARD, CH 01 TO 08              CH CONTROL KEYBOARD, CH 09 TO 16                CH CONTROL KEYBOARD, CH 17 TO 24
=======================================    =======================================    =======================================

ELM  1                                     ELM  1                                     ELM  1
                                   P01                                        P01                                        P01
---------------------------------------    ---------------------------------------    ---------------------------------------
PNT SIGNAL NAME  COLOR LV TYPE       F     PNT SIGNAL NAME  COLOR LV TYPE       F     PNT SIGNAL NAME  COLOR LV TYPE       F
---------------------------------------    ---------------------------------------    ---------------------------------------
 1  LDRW0-A                                 1  LDRW0-C                                 1  LDRW0-E
 2  LDRW1-A                                 2  LDRW1-C                                 2  LDRW1-E
 3  LDRW2-A                                 3  LDRW2-C                                 3  LDRW2-E
 4  LDRW3-A                                 4  LDRW3-C                                 4  LDRW3-E
 5  LDRW4-A                                 5  LDRW4-C                                 5  LDRW4-E
 6  LDRW5-A                                 6  LDRW5-C                                 6  LDRW5-E
 7  LDCLN7-A                                7  LDCLN7-C                                 7  LDCLN7-E
 8  KCLN7-A                                 8  KCLN7-C                                 8  KCLN7-E
 9  LDCLN6-A                                9  LDCLN6-C                                 9  LDCLN6-E
10  KCLN6-A                                10  KCLN6-C                                10  KCLN6-E
11  LDCLN5-A                               11  LDCLN5-C                               11  LDCLN5-E
12  KCLN5-A                                12  KCLN5-C                                12  KCLN5-E
13  LDCLN4-A                               13  LDCLN4-C                               13  LDCLN4-E
14                                         14                                         14
15  KCLN4-A                                15  KCLN4-C                                15  KCLN4-E
16  + 0.0                                  16  + 0.0                                  16  + 0.0
17  LDCLN3-A                               17  LDCLN3-C                               17  LDCLN3-E
18  KCLN3-A                                18  KCLN3-C                                18  KCLN3-E
19  LDCLN2-A                               19  LDCLN2-C                               19  LDCLN2-E
20  KCLN2-A                                20  KCLN2-C                                20  KCLN2-E
21  LDCLN1-A                               21  LDCLN1-C                               21  LDCLN1-E
22  KCLN1-A                                22  KCLN1-C                                22  KCLN1-E
23  LDCLN0-A                               23  LDCLN0-C                               23  LDCLN0-E
24  KCLN0-A                                24  KCLN0-C                                24  KCLN0-E
25  KRW4-A                                 25  KRW4-C                                 25  KRW4-E
26  KRW3-A                                 26  KRW3-C                                 26  KRW3-E
27  KRW2-A                                 27  KRW2-C                                 27  KRW2-E
28  KRW1-A                                 28  KRW1-C                                 28  KRW1-E
29  KRW0-A                                 29  KRW0-C                                 29  KRW0-E
30  + 5.0                                  30  + 5.0                                  30  + 5.0
---------------------------------------    ---------------------------------------    ---------------------------------------
```

```
*    WILLI STUDER AG   *    L O C A T I O N     P I N     L I S T          * 89/07/20 *   8:15 *   P A G E 163   *
*                           * TAPE TRANSPORT & AUDIO MCH *                  * 89/04/19 - 00                        *
ASY  6         1.820.620.00  VU PANEL 24 CH                                                <--  <--  <--  CONTINUATION

GRP 12         1.820.817.00
    MASTER KEYBOARD

ELM  1                                                              P01
PNT SIGNAL NAME  COLOR LV TYPE                                        F
 1  LDRW0-G
 2  LDRW1-G
 3  LDRW2-G
 4  LDRW3-G
 5  LDRW4-G
 6  LDRW5-G
 7  LDCLN7-G
 8  KCLN7-G
 9  LDCLN6-G
10  KCLN6-G
11  LDCLN5-G
12  KCLN5-G
13  LDCLN4-G
14
15  KCLN4-G
16  + 0.0
17  LDCLN3-G
18  KCLN3-G
19  LDCLN2-G
20  KCLN2-G
21  LDCLN1-G
22  KCLN1-G
23  LDCLN0-G
24  KCLN0-G
25  KRW4-G
26  KRW3-G
27  KRW2-G
28  KRW1-G
29  KRW0-G
30  + 5.0

GRP 13         1.820.736.00
    BARGRAPHS BOARD, CH 01 TO 08

ELM  1         1.820.736.00
    BARGRAPHS BOARD, CH 01 TO 08                                    P01
PNT SIGNAL NAME  COLOR LV TYPE                                        F
 1  + 0.0
 2  + 0.0
 3  + 5.6
 4  + 5.6
 5  + 0.0
 6  + 0.0
 7  + 5.6
 8  + 5.6
 9  T-B6D0
10  T-B6D1
11  T-B6D2
12  T-B6D3
13  T-B6D4
14  T-B6D5
15  T-B6D6
16  T-B6D7
17  T-B6WR
18  T-B6SL1
19  T-B6SL2
20  T-B6SL3
21  + 0.0
22  + 0.0
23  + 5.6
24  + 5.6
25  + 0.0
26  + 0.0

GRP 14         1.820.736.00
    BARGRAPHS BOARD, CH 09 TO 16

ELM  1         1.820.736.00
    BARGRAPHS BOARD, CH 09 TO 16                                    P01
PNT SIGNAL NAME  COLOR LV TYPE                                        F
 1  + 0.0
 2  + 0.0
 3  + 5.6
 4  + 5.6
 5  + 0.0
 6  + 0.0
 7  + 5.6
 8  + 5.6
 9  T-B6D0
10  T-B6D1
11  T-B6D2
12  T-B6D3
13  T-B6D4
14  T-B6D5
15  T-B6D6
16  T-B6D7
17  T-B6WR
18  T-B6SL1
19  T-B6SL2
20  T-B6SL3
21  + 0.0
22  + 0.0
23  + 5.6
24  + 5.6
25  + 0.0
26  + 0.0                                                             2
```

```
*    WILLI STUDER AG   *    L O C A T I O N     P I N     L I S T          * 89/07/20 *   8:15 *   P A G E 164   *
*                           * TAPE TRANSPORT & AUDIO MCH *                  * 89/04/19 - 00                        *
ASY  6         1.820.620.00  VU PANEL 24 CH                                                <--  <--  <--  CONTINUATION

GRP 15         1.820.736.00
    BARGRAPHS BOARD, CH 17 TO 24

ELM  1         1.820.736.00
    BARGRAPHS BOARD, CH 17 TO 24                                    P01
PNT SIGNAL NAME  COLOR LV TYPE                                        F
 1  + 0.0
 2  + 0.0
 3  + 5.6
 4  + 5.6
 5  + 0.0
 6  + 0.0
 7  + 5.6
 8  + 5.6
 9  T-B6D0
10  T-B6D1
11  T-B6D2
12  T-B6D3
13  T-B6D4
14  T-B6D5
15  T-B6D6
16  T-B6D7
17  T-B6WR
18  T-B6SL1
19  T-B6SL2
20  T-B6SL3
21  + 0.0
22  + 0.0
23  + 5.6
24  + 5.6
25  + 0.0
26  + 0.0

GRP 16         1.820.707.00
    ALIGNMENT KEYBOARD

ELM  1
    BUS                                                             P01
PNT SIGNAL NAME  COLOR LV TYPE                                        F
 1  + 0.0
 2  + 0.0
 3  + 5.6
 4  + 5.6
 5  T-KBA0
 6  T-KBA1
 7  T-KBA2
 8  T-MOD4
 9  T-MOD5
10
11  T-KBWR
12  T-KBSL4
13  T-KBSL5
14
15  T-KBD0
16  T-KBD1
17  T-KBD2
18  T-KBD3
19  T-KBD4
20  T-KBD5
21  T-KBD6
22  T-KBD7
23  + 5.6
24  + 5.6
25  + 0.0
26  + 0.0

GRP 17         1.820.891.00
    SUPPLY CABLE, DC CONVERTOR

ELM  1
    CONNECTOR FROM ASS01, GRP35
PNT SIGNAL NAME  COLOR LV TYPE                                        F
 1  OSTABIN       S
 2  OSTABIN       6
 3  OSTABIN       7
 4  +STABIN4      2
 5  +STABIN4      4
 6  +STABIN4      1
 7  PNLBUS1       9
 8  PNLBUS2       0

ELM  2
    TO ASS06, GRP01, ELM08
PNT SIGNAL NAME  COLOR LV TYPE                                        F
 1  PNLBUS1       9          Y
 2  PNLBUS2       0          Y

ELM  3
    TO DC CONVERTER
PNT SIGNAL NAME  COLOR LV TYPE                                        F
 1  +STABIN4      4-2-1      Y
 2  OSTABIN       S-7-6      Y
```

```
*    WILLI STUDER AG   *    L O C A T I O N     P I N     L I S T            *  89/07/20  *   8:15  *   P A G E 165   *
*                           * TAPE TRANSPORT & AUDIO MCH *                    *  89/04/19 - 00                        *
ASY  6        1.820.620.00  VU PANEL 24 CH                                                  <--  <--  <--  CONTINUATION

GRP 52        1.820.233.00
    DISPLAY (LCD)
=======================================

ELM  1
    TO GRP01, ELM03                                                  J01
---------------------------------------
PNT SIGNAL NAME  COLOR LV TYPE          F
---------------------------------------
 1  + 0.0
 2  + 5.6
 3  T-MOD6
 4  T-DENB
 5  T-KBWR
 6  T-MOD7
 7  T-KBD0
 8  T-KBD1
 9  T-KBD2
10  T-KBD3
11  T-KBD4
12  T-KBD5
13  T-KBD6
14  T-KBD7
15  T-DRESET
16  + 0.0
---------------------------------------
```

```
*    WILLI STUDER AG   *    L O C A T I O N     P I N     L I S T            *  89/07/20  *   8:15  *   P A G E 166   *
*                           * TAPE TRANSPORT & AUDIO MCH *                    *  89/04/19 - 00                        *
ASY  7        1.820.350.00  POWER SUPPLY, MCH

GRP  1
    POWER INPUT / OUTPUT
=======================================

ELM  1          54.42.0026
    POWER INPUT                                                      P01
---------------------------------------
PNT SIGNAL NAME  COLOR LV TYPE          F
---------------------------------------
 1  LINE1        1        J
 2  LINE2        6        J
 3  GND          5-4      J
---------------------------------------

ELM  2          54.42.0200
    POWER OUTPUT                                                     J01
---------------------------------------
PNT SIGNAL NAME  COLOR LV TYPE          F
---------------------------------------
 1  LINE1        1        J
 2  LINE2        6        J
 3  GND          5-4      J
---------------------------------------

GRP  2          55.17.5003
    POWER SWITCH
=======================================

ELM  1
    SWITCH                                                           S01
---------------------------------------
PNT SIGNAL NAME  COLOR LV TYPE          F
---------------------------------------
 1                1        J
 2                1        J
 3                1        J
 4                1        J
---------------------------------------

ELM  2
    CONTROL LAMP                                                     B01
---------------------------------------
PNT SIGNAL NAME  COLOR LV TYPE          F
---------------------------------------
 1                5        X
 2                5        X
---------------------------------------

GRP  3
    VOLTAGE SELECTOR
=======================================

ELM  1          55.12.0001
    SWITCH RIGHT                                                     S01
---------------------------------------
PNT SIGNAL NAME  COLOR LV TYPE          F
---------------------------------------
 1                6        J
 2                1        J
 3                6        J
 4                1        J
---------------------------------------

ELM  2          55.12.0001
    SWITCH LEFT                                                      S02
---------------------------------------
PNT SIGNAL NAME  COLOR LV TYPE          F
---------------------------------------
 1                5        J
 2                         J
 3                5        J
 4                         J
---------------------------------------
```

```
*    WILLI STUDER AG   *    L O C A T I O N     P I N     L I S T            *  89/07/20  *   8:15  *   P A G E 167   *
*                           * TAPE TRANSPORT & AUDIO MCH *                    *  89/04/19 - 00                        *
ASY  7        1.820.350.00  POWER SUPPLY, MCH                                               <--  <--  <--  CONTINUATION

GRP  4        1.820.351.00
    MAIN TRANSFORMER
=======================================

ELM  1
    PRIMARY
---------------------------------------
PNT SIGNAL NAME  COLOR LV TYPE          F
---------------------------------------
 1                4        K
 2                4        K
---------------------------------------

ELM  2
    SECONDARY 1
---------------------------------------
PNT SIGNAL NAME  COLOR LV TYPE          F
---------------------------------------
 1                2        K
 2                5        K
---------------------------------------

ELM  3
    SECONDARY 2
---------------------------------------
PNT SIGNAL NAME  COLOR LV TYPE          F
---------------------------------------
 1                6        K
 2                1        K
---------------------------------------

GRP  5        1.820.351.00
    MAIN TRANSFORMER
=======================================

ELM  1
    PRIMARY
---------------------------------------
PNT SIGNAL NAME  COLOR LV TYPE          F
---------------------------------------
 1                4        K
 2                4        K
---------------------------------------

ELM  2
    SECONDARY 1
---------------------------------------
PNT SIGNAL NAME  COLOR LV TYPE          F
---------------------------------------
 1                2        K
 2                5        K
---------------------------------------

ELM  3
    SECONDARY 2
---------------------------------------
PNT SIGNAL NAME  COLOR LV TYPE          F
---------------------------------------
 1                6        K
 2                1        K
---------------------------------------

GRP  6        1.820.530.00
    FILTER COIL
=======================================

ELM  1

---------------------------------------
PNT SIGNAL NAME  COLOR LV TYPE          F
---------------------------------------
 1                1        K
 2                3        K
 3                6        K
 4                7        K
---------------------------------------

ELM  2

---------------------------------------
PNT SIGNAL NAME  COLOR LV TYPE          F
---------------------------------------
 1                1        K
 2                3        K
 3                6        K
 4                7        K
---------------------------------------
```

```
*****************************************************************************************************************************
*   WILLI STUDER AG   *   L O C A T I O N   P I N   L I S T          * 89/07/20  *  8:15  *  P A G E 168   *
*****************************************************************************************************************************
*                          * TAPE TRANSPORT & AUDIO MCH *             * 89/04/19 - 00                                    *
*****************************************************************************************************************************
ASY  7        1.820.350.00  POWER SUPPLY, MCH                                          <--  <--  <--  CONTINUATION

GRP  7        1.820.530.00
   FILTER COIL
=====================================

ELM  1
-------------------------------------
PNT SIGNAL NAME  COLOR LV TYPE       F
-------------------------------------
 1               1        K
 2               3        K
 3               6        K
 4               7        K
-------------------------------------

ELM  2
-------------------------------------
PNT SIGNAL NAME  COLOR LV TYPE       F
-------------------------------------
 1               1        K
 2               3        K
 3               6        K
 4               7        K
-------------------------------------

GRP  8
   RECTIFIERS
=====================================

ELM  1          70.01.0232
                                  DZ01
-------------------------------------
PNT SIGNAL NAME  COLOR LV TYPE       F
-------------------------------------
 1               2        L
 2               5        L
 3  +STABIN      2        L
 4  OSTABINS     0        L
-------------------------------------

ELM  2          70.01.0232
                                  DZ02
-------------------------------------
PNT SIGNAL NAME  COLOR LV TYPE       F
-------------------------------------
 1               2        L
 2               5        L
 3  +STABIN      2        L
 4  OSTABINS     0        L
-------------------------------------

ELM  3          70.01.0232
                                  DZ03
-------------------------------------
PNT SIGNAL NAME  COLOR LV TYPE       F
-------------------------------------
 1               6        L
 2               1        L
 3  +STABIN      2        L
 4  OSTABINS     0        L
-------------------------------------

ELM  4          70.01.0232
                                  DZ04
-------------------------------------
PNT SIGNAL NAME  COLOR LV TYPE       F
-------------------------------------
 1               6        L
 2               1        L
 3  +STABIN      2        L
 4  OSTABINS     0        L
-------------------------------------

GRP  9
   CAPACITOR UNIT
=====================================

ELM  1          59.07.0004
   CAPACITOR                      C01
-------------------------------------
PNT SIGNAL NAME  COLOR LV TYPE       F
-------------------------------------
 1  +STABIN
 2  OSTABIN
-------------------------------------

ELM  2          59.07.0004
   CAPACITOR                      C02
-------------------------------------
PNT SIGNAL NAME  COLOR LV TYPE       F
-------------------------------------
 1  +STABIN
 2  OSTABIN
-------------------------------------

ELM  3          59.07.0004
   CAPACITOR                      C03
-------------------------------------
PNT SIGNAL NAME  COLOR LV TYPE       F
-------------------------------------
 1  +STABIN
 2  OSTABIN
-------------------------------------

ELM  4          56.02.0105
   INPUT START RELAIS             K01
-------------------------------------
PNT SIGNAL NAME  COLOR LV TYPE       F
-------------------------------------
 1  OSTABINS     0        J
 2  OSTABINS     0        J
 3  OSTABINS     0        J
 4  OSTABINS     0        J
 5               J
 6               J
 7  OSTABIN
 8  +STABIN      2        L
 9  K-START      0        L
-------------------------------------

ELM  5          57.92.1681
   RESISTOR ( 4 PIECES )          R01
-------------------------------------
PNT SIGNAL NAME  COLOR LV TYPE       F
-------------------------------------
 1  OSTABINS              L
 2  OSTABIN               L
-------------------------------------

*****************************************************************************************************************************
*   WILLI STUDER AG   *   L O C A T I O N   P I N   L I S T          * 89/07/20  *  8:15  *  P A G E 169   *
*****************************************************************************************************************************
*                          * TAPE TRANSPORT & AUDIO MCH *             * 89/04/19 - 00                                    *
*****************************************************************************************************************************
ASY  7        1.820.350.00  POWER SUPPLY, MCH                                          <--  <--  <--  CONTINUATION

GRP  9
                <--  <--  <--  CONTINUATION
=====================================

ELM  6          54.33.6007
   INPUT, POS.
-------------------------------------
PNT SIGNAL NAME  COLOR LV TYPE       F
-------------------------------------
 1  +STABIN      2        J
 2  +STABIN      2        J
 3  +STABIN      2        J
 4  +STABIN      2        J
 5  +STABIN      2        J
 6               J
-------------------------------------

ELM  7          54.33.6007
   OUTPUT, POS.
-------------------------------------
PNT SIGNAL NAME  COLOR LV TYPE       F
-------------------------------------
 1  +STABIN      2        J
 2  +STABIN      2        J
 3  +STABIN      2        J
 4  +STABIN      2        J
 5
 6
-------------------------------------

ELM  8          54.33.6007
   OUTPUT, NEG.
-------------------------------------
PNT SIGNAL NAME  COLOR LV TYPE       F
-------------------------------------
 1  OSTABIN      0        J
 2  OSTABIN      0        J
 3  OSTABIN      0        J
 4  OSTABIN      0        J
 5
 6
-------------------------------------

ELM  9          57.92.4152
   RESISTOR                       R02
-------------------------------------
PNT SIGNAL NAME  COLOR LV TYPE       F
-------------------------------------
 1  +STABIN               L
 2  OSTABIN               L
-------------------------------------

GRP  9
                <--  <--  <--  CONTINUATION
=====================================

ELM 10
-------------------------------------
PNT SIGNAL NAME  COLOR LV TYPE       F
-------------------------------------
 1  OSTABIN      0        J
 2
 3
 4
 5
 6
-------------------------------------

GRP 10
   FUSES (SECONDARY)
=====================================

ELM  1          51.01.0125
   FUSE                           F01
-------------------------------------
PNT SIGNAL NAME  COLOR LV TYPE       F
-------------------------------------
 1  +STABIN      2        J
 2  +STABIN1     2        J
-------------------------------------

ELM  2          51.01.0125
   FUSE                           F02
-------------------------------------
PNT SIGNAL NAME  COLOR LV TYPE       F
-------------------------------------
 1  +STABIN      2        J
 2  +STABIN2     2        J
-------------------------------------

ELM  3          51.01.0229
   FUSE                           F03
-------------------------------------
PNT SIGNAL NAME  COLOR LV TYPE       F
-------------------------------------
 1  +STABIN      2        J
 2  +STABIN3     2        J
-------------------------------------

ELM  4          51.01.0229
   FUSE                           F04
-------------------------------------
PNT SIGNAL NAME  COLOR LV TYPE       F
-------------------------------------
 1  +STABIN      2        J
 2  +STABIN4     2        J
-------------------------------------
```

```
*    WILLI STUDER AG    *    L O C A T I O N     P I N     L I S T            * 89/07/20 *   8:15  *  P A G E 170   *
*                            * TAPE TRANSPORT & AUDIO MCH *                  * 89/04/19 - 00                        *
ASY  7         1.820.350.00  POWER SUPPLY, MCH                                                  <--  <--  <--  CONTINUATION

GRP 11
    CONNECTOR DC OUTPUT
ELM  1           54.25.0310
                                                                  J02
PNT SIGNAL NAME  COLOR LV TYPE                                     F
 1  +STABIN1     2        BX
 2  OSTABIN      0        BX
 3  +STABIN2     2        BX
 4  OSTABIN      0        BX
 5  +STABIN3     2        BX
 6  OSTABIN      0        BX
 7  +STABIN4     2        BX
 8  OSTABIN      0        BX
 9  T-PWRON      5        BX
10                BX

GRP 12
    DISTRIBUTOR
ELM  1           54.03.0144
PNT SIGNAL NAME  COLOR LV TYPE                                     F
1A                1        K
1B                4        K
1C
1D                3        K
2A                6        K
2B
2C
2D                6        K
3A                7        K
3B
3C
3D                7        K
4A                1        K
4B                5        K
4C                6        K
4D                3        K

ELM  2           54.03.0144
PNT SIGNAL NAME  COLOR LV TYPE                                     F
1A                1        K
1B
1C                8        K
1D                3        K
2A                6        K
2B
2C
2D                6        K
3A                7        K
3B
3C
3D                7        K
4A                1        K
4B                9        K
4C                1        K
4D                3        K

GRP 12
                            <--  <--  <--  CONTINUATION
ELM  3           54.03.0144
PNT SIGNAL NAME  COLOR LV TYPE                                     F
1A                1        K
1B                1        K
1C
1D                1        K
2A                6        K
2B                6        K
2C                6        K
2D                6        K
3A                1        K
3B                4        K
3C
3D                1        K
4A                6        K
4B                4        K
4C
4D
5A                4        K
5B                4        K
5C                5        K
5D
6A                8        K
6B                4        K
6C
6D
7A                5        K
7B
7C
7D
                                                                   ./.
```

```
*    WILLI STUDER AG    *    L O C A T I O N     P I N     L I S T            * 89/07/20 *   8:15  *  P A G E 171   *
*                            * TAPE TRANSPORT & AUDIO MCH *                  * 89/04/19 - 00                        *
ASY  7         1.820.350.00  POWER SUPPLY, MCH                                                  <--  <--  <--  CONTINUATION

GRP 12
                            <--  <--  <--  CONTINUATION
ELM  4           54.03.0144
PNT SIGNAL NAME  COLOR LV TYPE                                     F
1A
1B                5        K
1C                5        K
1D                5        K
2A
2B                2        K
2C                2        K
2D                2        K
3A
3B                6        K
3C                6        K
3D                6        K
4A
4B                1        K
4C                1        K
4D                1        K

ELM  5           54.03.0144
PNT SIGNAL NAME  COLOR LV TYPE                                     F
1A
1B                5        K
1C                5        K
1D                5        K
2A
2B                2        K
2C                2        K
2D                2        K
3A
3B                6        K
3C                6        K
3D                6        K
4A
4B                1        K
4C                1        K
4D                1        K

GRP 13
    GROUND CONNECTION
ELM  1
PNT SIGNAL NAME  COLOR LV TYPE                                     F
 1  GND          5-4      J
 2  GND          5-4      J

GRP 14         1.820.791.00
    POWER FAIL DETECTOR
ELM  1           54.25.0308
PNT SIGNAL NAME  COLOR LV TYPE                                     F
 1  +STABIN      2        BX
 2  OSTABIN      0        BX
 3               5        BX
 4               5        BX
 5  T-PWRON      5        BX
 6  K-START      0        BX
 7  +STABIN1     2        BX
 8  +STABIN1     2        BX
```

```
 ******   *******   *     *   ******    *******   ******              *        *   *****   ******    *****   *     *    *****
*      *       *    *   *    *      *   *         *     *             *        *   *     *  *     *   *     *  **   **   *     *
*              *     * *     *      *   *         *     *             *        *   *     *  *     *   *     *  * * * *   *
 *****         *      *      *      *   *****     ******    *******   *        *   *     *  ******    *     *  *  *  *    *****
      *        *      *      *      *   *         *   *               *      *     *     *  *         *     *  *     *         *
*     *        *      *      *      *   *         *    *              *      *     *     *  *         *     *  *     *   *     *
 *****         *      *       ******   *******   *     *              ********     *****   *          *****   *     *    *****
```

```
*****************************************************************************************************************************************
*                                                                                                                                       *
*  PART NUMBER:                    *   *   T A P E   T R A N S P O R T   &   A U D I O   M C H   *                    *    INDEX: 00    *
*                                  *                                                                                  *                 *
*****************************************************************************************************************************************
```

P A G E 1 O F 271

S U M M A R Y

DATE OF ORIGIN: 89/04/19
DATE OF PROC. : 89/07/20

ASSEMBLYS	7		
GROUPS	91		
ELEMENTS	700		
PINS (TOTAL)	12317	(UNUSED PINS	902)
MULTIPLE PINS	0		
CODING KEYS	283		
SIGNALS	2141	(UNUSED SIGNALS	280)

RECORDS READ 13402

GROUP NODE = *
INTER GROUP NODE = #
DIRECT WIRE TO # = <
WIRING NOT COMPUTED = @

OPTIONS SPECIFIED : SIGLIS, SIGSTA, ALLCOL, WIRALL

OPTIONS USED : SIGLIS, SIGSTA, ALLCOL, WIRALL

LISTINGS GENERATED :	PAGE	ERR	WRN
GROUP SUMMARY	2	0	0
SIGNAL WIRE LIST	4	0	0
SIGNAL STATISTIC	251	0	0

====>> NO PUNCH GENERATED <<====

****

```
*****************************************************************************************************************************************
*   WILLI STUDER AG   *   G R O U P   S U M M A R Y                          * 89/07/20 *  9:25 *  P A G E  2  *
*****************************************************************************************************************************************
*                         * TAPE TRANSPORT & AUDIO MCH *                      * 89/04/19 - 00                                           *
*****************************************************************************************************************************************
```

ASY	GRP	PART NUMBER	DESCRIPTION	UNUSED PINS	USED PINS	TOT.PINS	MULT.PINS	COD.KEYS	TOT.ELM	REM
1	20	1.820.704.00	BASIS BOARD TAPE DECK	115	943	1058	0	8	43	
1	21	1.820.702.00	BASIS BOARD AUDIO CONTROL	97	420	517	0	3	21	
1	22	1.820.802.00	BASIS BOARD AUDIO CTR. + BACK UP OP.	105	538	643	0	6	27	
1	23	1.820.322.00	SYNC.-CONNECTION PANEL MK1/MK2	26	94	120	0	1	15	
1	24		AUDIO REMOTE CONTROL PANEL	9	38	47	0	6	7	
1	25		REMOTE CONTROL PANEL	2	72	74	0	3	5	
1	26	1.820.729.00	SERIAL REMOTE INTERFACE	4	35	39	0	1	3	
1	27	1.820.738.00	PARALLEL REMOTE INTERFACE	3	118	121	0	2	6	
1	28	1.820.861.00	TIMER CONTROL BOARD	0	34	34	0	0	3	
1	29	1.820.869.00	POWER FAIL SENSE BOARD	0	40	40	0	0	6	
1	30	1.820.875.00	SPOOLING MOTOR DRIVE AMPLIFIER RIGHT	1	23	24	0	0	4	
1	31	1.820.871.00	SWITCHING STABILIZER +15.0 / -15.0	2	20	22	0	0	3	
1	32	1.820.872.00	SWITCHING STABILIZER + 5.6	1	21	22	0	0	3	
1	33	1.820.875.00	SPOOLING MOTOR DRIVE AMPLIFIER LEFT	1	23	24	0	0	4	
1	34		GROUND CONNECTION	0	1	1	0	0	1	
1	35	1.820.865.00	DISTRIBUTION BOARD TAPE DECK	21	298	319	0	0	39	
1	36	1.820.192.00	SPOOLING MOTOR ASSEMBLY, LEFT	1	11	12	0	0	2	
1	37	1.820.192.00	SPOOLING MOTOR ASSEMBLY, RIGHT	1	11	12	0	0	2	
1	38	1.021.695.00	CAPSTAN MOTOR (ELECTRONICS BOARD)	13	15	28	0	0	5	
1	39	1.820.774.00	CAPSTAN MOTOR DRIVE AMPLIFIER	4	30	34	0	0	3	
1	40	1.080.230.00	BRAKE ASSEMBLY, LEFT	1	2	3	0	0	1	
1	41	1.080.240.00	BRAKE ASSEMBLY, RIGHT	1	2	3	0	0	1	
1	42	1.820.772.00	TAPE TENSION SENSOR, LEFT	3	7	10	0	0	1	
1	43	1.820.772.00	TAPE TENSION SENSOR, RIGHT	3	7	10	0	0	1	
1	44	1.820.793.00	OPTO + EXTENDED SENSORS	0	10	10	0	0	1	
1	45	1.820.770.00	MOVE SENSOR	1	9	10	0	0	1	
1	46	1.820.773.00	TAPE LIFTER CONTROL, LEFT	5	11	16	0	0	1	
1	47	1.820.773.00	TAPE LIFTER CONTROL, RIGHT	5	11	16	0	0	1	
1	48	1.820.240.00	PUSHBUTTON ASSEMBLY	4	42	46	0	0	3	
1	49	1.820.250.00	EDIT ASSEMBLY	1	14	15	0	0	2	
1	50	1.820.768.00	TAPE DECK DISPLAY DRIVER	3	119	122	0	0	4	
1	51	1.820.767.00	COMMAND UNIT	1	39	40	0	0	1	
1	52	1.820.233.00	LCD DISPLAY UNIT	0	16	16	0	0	1	
1	53	1.820.718.82	COMMUNICATIONS CONTROLLER, FRONT	4	5	9	0	0	1	
1	59	1.820.866.00	FUSE/SUPPLY FAILURE DETECTOR	1	15	16	0	0	1	
1	60	1.820.831.00	PINCH ROLLER GATE	16	76	92	0	0	8	
2	1	1.050.152.00	HEAD BLOCK ASSEMBLY (24 CH)	35	215	250	0	0	10	
2	2	1.820.808.00	PREAMPLIFIER, CH 01 TO 08	0	50	50	0	0	2	
2	3	1.820.808.00	PREAMPLIFIER, CH 09 TO 16	0	50	50	0	0	2	
2	4	1.820.808.00	PREAMPLIFIER, CH 17 TO 24	0	50	50	0	0	2	
2	5		GROUND CONNECTION	0	4	4	0	0	1	
3	1	1.820.703.00	BASISBOARD, CH 01 TO 04	21	1060	1081	0	36	43	
3	2	1.820.703.00	BASISBOARD, CH 05 TO 08	21	1060	1081	0	36	43	
3	3	1.820.778.00	DISTRIBUTION BOARD AUDIO RACK	2	43	45	0	1	5	
3	4	1.820.809.00	BASISBOARD, NRS OPTION CH 01 TO 08	39	97	136	0	10	17	
3	11	1.820.863.00	LINE INPUTS, CH 01 TO 08	0	49	49	0	0	9	
3	14	1.820.864.00	LINE OUTPUTS, CH 01 TO 08	0	49	49	0	0	9	
4	1	1.820.703.00	BASISBOARD, CH 09 TO 12	21	1060	1081	0	36	43	

WILLI STUDER AG * G R O U P S U M M A R Y * 89/07/20 * 9:25 * P A G E 3

* TAPE TRANSPORT & AUDIO MCH * * 89/04/19 - 00

ASY	GRP	PART NUMBER	DESCRIPTION	UNUSED PINS	USED PINS	TOT.PINS	MULT.PINS	COD.KEYS	TOT.ELM	REM
4	2	1.820.703.00	BASISBOARD, CH 13 TO 16	21	1060	1081	0	36	43	
4	3	1.820.778.00	DISTRIBUTION BOARD AUDIO RACK	6	39	45	0	1	5	
4	4	1.820.809.00	BASISBOARD, NRS OPTION CH 09 TO 16	24	112	136	0	10	17	
4	11	1.820.863.00	LINE INPUTS, CH 09 TO 16	0	49	49	0	0	9	
4	14	1.820.864.00	LINE OUTPUTS, CH 09 TO 16	0	49	49	0	0	9	
5	1	1.820.703.00	BASISBOARD, CH 17 TO 20	21	1060	1081	0	36	43	
5	2	1.820.703.00	BASISBOARD, CH 21 TO 24	21	1060	1081	0	36	43	
5	3	1.820.778.00	DISTRIBUTION BOARD AUDIO RACK	6	39	45	0	1	5	
5	4	1.820.809.00	BASISBOARD, NRS OPTION CH 17 TO 24	24	112	136	0	10	17	
5	11	1.820.863.00	LINE INPUTS, CH 17 TO 24	0	49	49	0	0	9	
5	14	1.820.864.00	LINE OUTPUTS, CH 17 TO 24	0	49	49	0	0	9	
6	1	1.820.705.00	BASIS BOARD VU PANEL	12	166	178	0	2	8	
6	2	1.820.783.00	MPU VU PANEL MCH	2	36	38	0	1	1	
6	3		SERVICE BOARD	2	36	38	0	1	1	
6	4	1.820.706.00	DC CONVERTER 5.6 V	0	8	8	0	0	2	
6	5	1.820.709.00	KEYBOARD DRIVER, CH 01 TO 08	1	55	56	0	0	2	
6	6	1.820.709.00	KEYBOARD DRIVER, CH 09 TO 16	1	55	56	0	0	2	
6	7	1.820.709.00	KEYBOARD DRIVER, CH 17 TO 24	1	55	56	0	0	2	
6	8	1.820.709.00	KEYBOARD DRIVER, MASTER	3	53	56	0	0	2	
6	9	1.820.708.00	CH CONTROL KEYBOARD, CH 01 TO 08	1	29	30	0	0	1	
6	10	1.820.708.00	CH CONTROL KEYBOARD, CH 09 TO 16	1	29	30	0	0	1	
6	11	1.820.708.00	CH CONTROL KEYBOARD, CH 17 TO 24	1	29	30	0	0	1	
6	12	1.820.817.00	MASTER KEYBOARD	1	29	30	0	0	1	
6	13	1.820.736.00	BARGRAPHS BOARD, CH 01 TO 08	0	26	26	0	0	1	
6	14	1.820.736.00	BARGRAPHS BOARD, CH 09 TO 16	0	26	26	0	0	1	
6	15	1.820.736.00	BARGRAPHS BOARD, CH 17 TO 24	0	26	26	0	0	1	
6	16	1.820.707.00	ALIGNMENT KEYBOARD	2	24	26	0	0	1	
6	17	1.820.891.00	SUPPLY CABLE, DC CONVERTOR	0	12	12	0	0	3	
6	52	1.820.233.00	DISPLAY (LCD)	0	16	16	0	0	1	
7	1		POWER INPUT / OUTPUT	0	6	6	0	0	2	
7	2	55.17.5003	POWER SWITCH	6	0	6	0	0	2	
7	3		VOLTAGE SELECTOR	8	0	8	0	0	2	
7	4	1.820.351.00	MAIN TRANSFORMER	6	0	6	0	0	3	
7	5	1.820.351.00	MAIN TRANSFORMER	6	0	6	0	0	3	
7	6	1.820.530.00	FILTER COIL	8	0	8	0	0	2	
7	7	1.820.530.00	FILTER COIL	8	0	8	0	0	2	
7	8		RECTIFIERS	8	8	16	0	0	4	
7	9		CAPACITOR UNIT	12	31	43	0	0	10	
7	10		FUSES (SECONDARY)	0	8	8	0	0	4	
7	11		CONNECTOR DC OUTPUT	1	9	10	0	0	1	
7	12		DISTRIBUTOR	92	0	92	0	0	5	
7	13		GROUND CONNECTION	0	2	2	0	0	1	
7	14	1.820.791.00	POWER FAIL DETECTOR	2	6	8	0	0	1	
			DISTRIBUTED IN 91 GRP TOTAL :	902	11415	12317	0	283	700	

WILLI STUDER AG * S I G N A L W I R E L I S T * 89/07/20 * 9:25 * P A G E 4

* TAPE TRANSPORT & AUDIO MCH * * 89/04/19 - 00

SIGNAL NAME	COLOR	MI	ASY	GRP	ELM	PNT	S	LV	TYPE	DESCRIPTION OF ELEMENT	REMARK	ELEMENT NR.
+ 0.0			1	20	1	1				SPOOLING M. DRIVE AMP. LEFT	P01	
			1	20	1	2				SPOOLING M. DRIVE AMP. LEFT	P01	
			1	20	1	16				SPOOLING M. DRIVE AMP. LEFT	P01	
			1	20	2	1				SPOOLING M. DRIVE AMP. RIGHT	P02	
			1	20	2	2				SPOOLING M. DRIVE AMP. RIGHT	P02	
			1	20	2	16				SPOOLING M. DRIVE AMP. RIGHT	P02	
			1	20	3	1				CAPSTAN M. DRIVE AMPLIFIER	P03	
			1	20	3	2				CAPSTAN M. DRIVE AMPLIFIER	P03	
			1	20	3	9				CAPSTAN M. DRIVE AMPLIFIER	P03	
			1	20	3	11				CAPSTAN M. DRIVE AMPLIFIER	P03	
			1	20	3	12				CAPSTAN M. DRIVE AMPLIFIER	P03	
			1	20	3	16				CAPSTAN M. DRIVE AMPLIFIER	P03	
			1	20	4	1				PAR. CONT. INT. SYNCHRONIZER	P04	
			1	20	4	2				PAR. CONT. INT. SYNCHRONIZER	P04	
			1	20	4	9				PAR. CONT. INT. SYNCHRONIZER	P04	
			1	20	4	11				PAR. CONT. INT. SYNCHRONIZER	P04	
			1	20	4	16				PAR. CONT. INT. SYNCHRONIZER	P04	
			1	20	6	1				OPTO + EXTENDED SENSORS	P06	
			1	20	6	2				OPTO + EXTENDED SENSORS	P06	
			1	20	7	1				TAPE LIFT MOTOR, LEFT	P07	
			1	20	7	2				TAPE LIFT MOTOR, LEFT	P07	
			1	20	8	1				TAPE LIFT MOTOR, RIGHT	P08	
			1	20	8	2				TAPE LIFT MOTOR, RIGHT	P08	
			1	20	9	1				TACHO SENSOR SPOOLING M. LEFT	P09	
			1	20	9	2				TACHO SENSOR SPOOLING M. LEFT	P09	
			1	20	10	1				TACHO SENSOR SPOOLING M. RIGHT	P10	
			1	20	10	2				TACHO SENSOR SPOOLING M. RIGHT	P10	
			1	20	11	1				MOVE SENSOR	P11	
			1	20	11	2				MOVE SENSOR	P11	
			1	20	12	1				TAPE TENSION SENSOR, LEFT	P12	
			1	20	12	2				TAPE TENSION SENSOR, LEFT	P12	
			1	20	13	1				TAPE TENSION SENSOR, RIGHT	P13	
			1	20	13	2				TAPE TENSION SENSOR, RIGHT	P13	
			1	20	14	11				FUSE FAILURE DETECTOR	P14	
			1	20	14	12				FUSE FAILURE DETECTOR	P14	
			1	20	15	1				DISPLAY DRIVER	P15	
			1	20	15	2				DISPLAY DRIVER	P15	
			1	20	16	1				PARALLEL REMOTE INTERFACE	P16	
			1	20	16	2				PARALLEL REMOTE INTERFACE	P16	
			1	20	17	1				TO HEAD BLOCK ASSEMBLY	P17	
			1	20	17	2				TO HEAD BLOCK ASSEMBLY	P17	
			1	20	17	20				TO HEAD BLOCK ASSEMBLY	P17	
			1	20	17	22				TO HEAD BLOCK ASSEMBLY	P17	
			1	20	17	25				TO HEAD BLOCK ASSEMBLY	P17	
			1	20	17	26				TO HEAD BLOCK ASSEMBLY	P17	
			1	20	18	1				RESERVE	P18	
			1	20	18	2				RESERVE	P18	
			1	20	18	20				RESERVE	P18	
			1	20	18	22				RESERVE	P18	
			1	20	18	25				RESERVE	P18	
			1	20	18	26				RESERVE	P18	
			1	20	19	1				MECHANICAL ELAPSED TIMER	P19	
			1	20	19	2				MECHANICAL ELAPSED TIMER	P19	
			1	20	32	1				BASIS BOARD AUDIO CONT. ELM15	P24	

WILLI STUDER AG * SIGNAL WIRE LIST * 89/07/20 * 9:25 * PAGE 5

* TAPE TRANSPORT & AUDIO MCH * * 89/04/19 - 00

SIGNAL NAME	COLOR	MI	ASY	GRP	ELM	PNT	S	LV	TYPE	DESCRIPTION OF ELEMENT		REMARK	ELEMENT NR.
<<-- CONT.OF			1	20	32	3				BASIS BOARD AUDIO CONT. ELM15	P24		
+ 0.0			1	20	32	5				BASIS BOARD AUDIO CONT. ELM15	P24		
			1	20	32	7				BASIS BOARD AUDIO CONT. ELM15	P24		
			1	20	32	9				BASIS BOARD AUDIO CONT. ELM15	P24		
			1	20	32	11				BASIS BOARD AUDIO CONT. ELM15	P24		
			1	20	32	13				BASIS BOARD AUDIO CONT. ELM15	P24		
			1	20	32	15				BASIS BOARD AUDIO CONT. ELM15	P24		
			1	20	32	17				BASIS BOARD AUDIO CONT. ELM15	P24		
			1	20	32	19				BASIS BOARD AUDIO CONT. ELM15	P24		
			1	20	32	21				BASIS BOARD AUDIO CONT. ELM15	P24		
			1	20	32	23				BASIS BOARD AUDIO CONT. ELM15	P24		
			1	20	32	25				BASIS BOARD AUDIO CONT. ELM15	P24		
			1	20	33	1				BASIS BOARD AUDIO CONT. ELM16	P25		
			1	20	33	3				BASIS BOARD AUDIO CONT. ELM16	P25		
			1	20	33	5				BASIS BOARD AUDIO CONT. ELM16	P25		
			1	20	33	7				BASIS BOARD AUDIO CONT. ELM16	P25		
			1	20	33	9				BASIS BOARD AUDIO CONT. ELM16	P25		
			1	20	33	11				BASIS BOARD AUDIO CONT. ELM16	P25		
			1	20	33	13				BASIS BOARD AUDIO CONT. ELM16	P25		
			1	20	33	15				BASIS BOARD AUDIO CONT. ELM16	P25		
			1	20	33	17				BASIS BOARD AUDIO CONT. ELM16	P25		
			1	20	33	19				BASIS BOARD AUDIO CONT. ELM16	P25		
			1	20	33	21				BASIS BOARD AUDIO CONT. ELM16	P25		
			1	20	33	23				BASIS BOARD AUDIO CONT. ELM16	P25		
			1	20	33	25				BASIS BOARD AUDIO CONT. ELM16	P25		
			1	20	34	2				INT. SYNCHRONIZER			
			1	20	34	4				INT. SYNCHRONIZER			
			1	20	34	6				INT. SYNCHRONIZER			
			1	20	34	8				INT. SYNCHRONIZER			
			1	20	34	10				INT. SYNCHRONIZER			
			1	20	34	11				INT. SYNCHRONIZER			
			1	20	34	12				INT. SYNCHRONIZER			
			1	20	34	13				INT. SYNCHRONIZER			
			1	20	34	14				INT. SYNCHRONIZER			
			1	20	34	16				INT. SYNCHRONIZER			
			1	20	34	18				INT. SYNCHRONIZER			
			1	20	34	20				INT. SYNCHRONIZER			
			1	20	34	22				INT. SYNCHRONIZER			
			1	20	34	24				INT. SYNCHRONIZER			
			1	20	34	26				INT. SYNCHRONIZER			
			1	20	34	28				INT. SYNCHRONIZER			
			1	20	34	30				INT. SYNCHRONIZER			
			1	20	34	32				INT. SYNCHRONIZER			
			1	20	34	34				INT. SYNCHRONIZER			
			1	20	34	36				INT. SYNCHRONIZER			
			1	20	34	38				INT. SYNCHRONIZER			
			1	20	34	40				INT. SYNCHRONIZER			
			1	20	40	21				SPOOLING MOTOR DRIVER	J01		1.820.759.00
			1	20	41	21				CAPSTAN CONTROL UNIT	J02		1.820.764.00
			1	20	42	17A				CAPSTAN INTERFACE	J03		1.820.727.00
			1	20	42	17B				CAPSTAN INTERFACE	J03		1.820.727.00
			1	20	43	17A				TAPE DECK PERIPHERY CONTR.	J04		1.820.762.00
			1	20	43	17B				TAPE DECK PERIPHERY CONTR.	J04		1.820.762.00
			1	20	44	21				TAPE DECK COUNTER / TIMER	J05		1.820.761.00

WILLI STUDER AG * SIGNAL WIRE LIST * 89/07/20 * 9:25 * PAGE 6

* TAPE TRANSPORT & AUDIO MCH * * 89/04/19 - 00

SIGNAL NAME	COLOR	MI	ASY	GRP	ELM	PNT	S	LV	TYPE	DESCRIPTION OF ELEMENT		REMARK	ELEMENT NR.
<<-- CONT.OF			1	20	45	21				SPOOLING MOTOR CONTROLLER	J06		1.820.822.00
+ 0.0			1	20	46	21				MP-UNIT TO CONTROL MCH	J07		1.820.781.00
			1	20	47	21				TAPE DECK SERIAL INTERFACE	J08		1.820.763.00
			1	20	48	17A				MASTER SERIAL INTERFACE	J09		1.820.753.00
			1	20	48	17B				MASTER SERIAL INTERFACE	J09		1.820.753.00
			1	20	49	21				MP-UNIT MASTER MCH	J10		1.820.784.00
			1	20	50	21				SMPTE/EBU INTERFACE	J11		1.820.751.00
			1	20	51	16A				MASTER TO AUDIO INTERFACE	J12		1.820.756.00
			1	20	51	16B				MASTER TO AUDIO INTERFACE	J12		1.820.756.00
	0		1	20	60	1			L	WIRE FIELD (FROM GRP20, ELM70)			
	0		1	20	60	2			L	WIRE FIELD (FROM GRP20, ELM70)			
	0		1	20	60	3			L	WIRE FIELD (FROM GRP20, ELM70)			
	0		1	20	61	3			L	WIRE FIELD (FROM GRP20, ELM70)			
	0		1	20	61	4			L	WIRE FIELD (FROM GRP20, ELM70)			
	0		1	20	61	6			L	WIRE FIELD (FROM GRP20, ELM70)			
	0		1	20	61	7			L	WIRE FIELD (FROM GRP20, ELM70)			
	0		1	20	61	8			L	WIRE FIELD (FROM GRP20, ELM70)			
	0		1	20	70	5			F	FROM GRP35, ELM59	J13		
	0		1	20	70	6			F	FROM GRP35, ELM59	J13		
	0		1	20	70	8			F	FROM GRP35, ELM59	J13		
	0		1	20	70	9			F	FROM GRP35, ELM59	J13		
	0		1	20	70	10			F	FROM GRP35, ELM59	J13		
	0		1	20	70	13			F	FROM GRP35, ELM59	J13		
	0		1	20	70	14			F	FROM GRP35, ELM59	J13		
	0		1	20	70	21			F	FROM GRP35, ELM59	J13		
			1	21	1	2				CONNECTOR STUDIOBUS	J02		
			1	21	2	2				CONNECTOR STUDIOBUS	J03		
			1	21	3	2				CONNECTOR STUDIOBUS	J04		
			1	21	6	1					P03		
			1	21	7	1					P04		
			1	21	8	3			BX	FROM GRP35, ELM61	J01		
			1	21	8	4			BX	FROM GRP35, ELM61	J01		
			1	21	15	1				TAPE DECK BASIS BOARD, ELM32	P08		
			1	21	15	3				TAPE DECK BASIS BOARD, ELM32	P08		
			1	21	15	5				TAPE DECK BASIS BOARD, ELM32	P08		
			1	21	15	7				TAPE DECK BASIS BOARD, ELM32	P08		
			1	21	15	9				TAPE DECK BASIS BOARD, ELM32	P08		
			1	21	15	11				TAPE DECK BASIS BOARD, ELM32	P08		
			1	21	15	13				TAPE DECK BASIS BOARD, ELM32	P08		
			1	21	15	15				TAPE DECK BASIS BOARD, ELM32	P08		
			1	21	15	17				TAPE DECK BASIS BOARD, ELM32	P08		
			1	21	15	19				TAPE DECK BASIS BOARD, ELM32	P08		
			1	21	15	21				TAPE DECK BASIS BOARD, ELM32	P08		
			1	21	15	23				TAPE DECK BASIS BOARD, ELM32	P08		
			1	21	15	25				TAPE DECK BASIS BOARD, ELM32	P08		
			1	21	16	1				TAPE DECK BASIS BOARD, ELM33	P09		
			1	21	16	3				TAPE DECK BASIS BOARD, ELM33	P09		
			1	21	16	5				TAPE DECK BASIS BOARD, ELM33	P09		
			1	21	16	7				TAPE DECK BASIS BOARD, ELM33	P09		
			1	21	16	9				TAPE DECK BASIS BOARD, ELM33	P09		
			1	21	16	11				TAPE DECK BASIS BOARD, ELM33	P09		
			1	21	16	13				TAPE DECK BASIS BOARD, ELM33	P09		
			1	21	16	15				TAPE DECK BASIS BOARD, ELM33	P09		
			1	21	16	17				TAPE DECK BASIS BOARD, ELM33	P09		

```
*    WILLI STUDER AG    *    S I G N A L    W I R E    L I S T              * 89/07/20 *   9:25 *   P A G E   7   *
*                          * TAPE TRANSPORT & AUDIO MCH *                    * 89/04/19 - 00                        *
```

SIGNAL NAME	COLOR	MI	ASY	GRP	ELM	PNT	S	LV	TYPE	DESCRIPTION OF ELEMENT		REMARK	ELEMENT NR.
<<-- CONT.OF			1	21	16	19				TAPE DECK BASIS BOARD, ELM33	P09		
+ 0.0			1	21	16	21				TAPE DECK BASIS BOARD, ELM33	P09		
			1	21	16	23				TAPE DECK BASIS BOARD, ELM33	P09		
			1	21	16	25				TAPE DECK BASIS BOARD, ELM33	P09		
			1	21	20	21				COMMUNICATIONS CONTROLLER	J05		1.820.718.00
			1	21	21	21				MPU AUDIO CONTROL MCH	J06		1.820.782.00
			1	21	22	21				GENERATOR UNIT MCH	J07		1.820.725.00
			1	21	23	4B				CONTROLLER EXTERNAL NRS	J08		1.820.816.00
			1	21	23	12B				CONTROLLER EXTERNAL NRS	J08		1.820.816.00
			1	21	24	4C				BUS DRIVER MCH	J09		1.820.723.00
			1	21	24	12C				BUS DRIVER MCH	J09		1.820.723.00
			1	21	50	1				TO AUDIO RACK CH 1 TO 8	P10		
			1	21	50	2				TO AUDIO RACK CH 1 TO 8	P10		
			1	21	50	10				TO AUDIO RACK CH 1 TO 8	P10		
			1	21	50	13				TO AUDIO RACK CH 1 TO 8	P10		
			1	21	50	16				TO AUDIO RACK CH 1 TO 8	P10		
			1	21	50	19				TO AUDIO RACK CH 1 TO 8	P10		
			1	21	50	22				TO AUDIO RACK CH 1 TO 8	P10		
			1	21	50	24				TO AUDIO RACK CH 1 TO 8	P10		
			1	21	50	26				TO AUDIO RACK CH 1 TO 8	P10		
			1	21	50	28				TO AUDIO RACK CH 1 TO 8	P10		
			1	21	50	30				TO AUDIO RACK CH 1 TO 8	P10		
			1	21	50	32				TO AUDIO RACK CH 1 TO 8	P10		
			1	21	50	34				TO AUDIO RACK CH 1 TO 8	P10		
			1	21	50	36				TO AUDIO RACK CH 1 TO 8	P10		
			1	21	50	38				TO AUDIO RACK CH 1 TO 8	P10		
			1	21	50	40				TO AUDIO RACK CH 1 TO 8	P10		
			1	21	51	1				TO AUDIO RACK CH 9 TO 16	P11		
			1	21	51	2				TO AUDIO RACK CH 9 TO 16	P11		
			1	21	51	10				TO AUDIO RACK CH 9 TO 16	P11		
			1	21	51	13				TO AUDIO RACK CH 9 TO 16	P11		
			1	21	51	16				TO AUDIO RACK CH 9 TO 16	P11		
			1	21	51	19				TO AUDIO RACK CH 9 TO 16	P11		
			1	21	51	22				TO AUDIO RACK CH 9 TO 16	P11		
			1	21	51	24				TO AUDIO RACK CH 9 TO 16	P11		
			1	21	51	26				TO AUDIO RACK CH 9 TO 16	P11		
			1	21	51	28				TO AUDIO RACK CH 9 TO 16	P11		
			1	21	51	30				TO AUDIO RACK CH 9 TO 16	P11		
			1	21	51	32				TO AUDIO RACK CH 9 TO 16	P11		
			1	21	51	34				TO AUDIO RACK CH 9 TO 16	P11		
			1	21	51	36				TO AUDIO RACK CH 9 TO 16	P11		
			1	21	51	38				TO AUDIO RACK CH 9 TO 16	P11		
			1	21	51	40				TO AUDIO RACK CH 9 TO 16	P11		
			1	21	52	1				TO AUDIO RACK CH 17 TO 24	P12		
			1	21	52	2				TO AUDIO RACK CH 17 TO 24	P12		
			1	21	52	10				TO AUDIO RACK CH 17 TO 24	P12		
			1	21	52	13				TO AUDIO RACK CH 17 TO 24	P12		
			1	21	52	16				TO AUDIO RACK CH 17 TO 24	P12		
			1	21	52	19				TO AUDIO RACK CH 17 TO 24	P12		
			1	21	52	22				TO AUDIO RACK CH 17 TO 24	P12		
			1	21	52	24				TO AUDIO RACK CH 17 TO 24	P12		
			1	21	52	26				TO AUDIO RACK CH 17 TO 24	P12		
			1	21	52	28				TO AUDIO RACK CH 17 TO 24	P12		
			1	21	52	30				TO AUDIO RACK CH 17 TO 24	P12		

```
*    WILLI STUDER AG    *    S I G N A L    W I R E    L I S T              * 89/07/20 *   9:25 *   P A G E   8   *
*                          * TAPE TRANSPORT & AUDIO MCH *                    * 89/04/19 - 00                        *
```

SIGNAL NAME	COLOR	MI	ASY	GRP	ELM	PNT	S	LV	TYPE	DESCRIPTION OF ELEMENT		REMARK	ELEMENT NR.
<<-- CONT.OF			1	21	52	32				TO AUDIO RACK CH 17 TO 24	P12		
+ 0.0			1	21	52	34				TO AUDIO RACK CH 17 TO 24	P12		
			1	21	52	36				TO AUDIO RACK CH 17 TO 24	P12		
			1	21	52	38				TO AUDIO RACK CH 17 TO 24	P12		
			1	21	52	40				TO AUDIO RACK CH 17 TO 24	P12		
			1	22	1	2				CONNECTOR STUDIOBUS	J02		
			1	22	2	2				CONNECTOR STUDIOBUS	J03		
			1	22	3	2				CONNECTOR STUDIOBUS	J04		
			1	22	6	1					P03		
			1	22	7	1					P04		
			1	22	8	3			BX	FROM GRP35, ELM61	J01		
			1	22	8	4			BX	FROM GRP35, ELM61	J01		
			1	22	9	2			BX	POWER SUPPLY FLOPPY TD	J11		
			1	22	9	3			BX	POWER SUPPLY FLOPPY TD	J11		
			1	22	15	1				TAPE DECK BASIS BOARD, ELM32	P08		
			1	22	15	3				TAPE DECK BASIS BOARD, ELM32	P08		
			1	22	15	5				TAPE DECK BASIS BOARD, ELM32	P08		
			1	22	15	7				TAPE DECK BASIS BOARD, ELM32	P08		
			1	22	15	9				TAPE DECK BASIS BOARD, ELM32	P08		
			1	22	15	11				TAPE DECK BASIS BOARD, ELM32	P08		
			1	22	15	13				TAPE DECK BASIS BOARD, ELM32	P08		
			1	22	15	15				TAPE DECK BASIS BOARD, ELM32	P08		
			1	22	15	17				TAPE DECK BASIS BOARD, ELM32	P08		
			1	22	15	19				TAPE DECK BASIS BOARD, ELM32	P08		
			1	22	15	21				TAPE DECK BASIS BOARD, ELM32	P08		
			1	22	15	23				TAPE DECK BASIS BOARD, ELM32	P08		
			1	22	15	25				TAPE DECK BASIS BOARD, ELM32	P08		
			1	22	16	1				TAPE DECK BASIS BOARD, ELM33	P09		
			1	22	16	3				TAPE DECK BASIS BOARD, ELM33	P09		
			1	22	16	5				TAPE DECK BASIS BOARD, ELM33	P09		
			1	22	16	7				TAPE DECK BASIS BOARD, ELM33	P09		
			1	22	16	9				TAPE DECK BASIS BOARD, ELM33	P09		
			1	22	16	11				TAPE DECK BASIS BOARD, ELM33	P09		
			1	22	16	13				TAPE DECK BASIS BOARD, ELM33	P09		
			1	22	16	15				TAPE DECK BASIS BOARD, ELM33	P09		
			1	22	16	17				TAPE DECK BASIS BOARD, ELM33	P09		
			1	22	16	19				TAPE DECK BASIS BOARD, ELM33	P09		
			1	22	16	21				TAPE DECK BASIS BOARD, ELM33	P09		
			1	22	16	23				TAPE DECK BASIS BOARD, ELM33	P09		
			1	22	16	25				TAPE DECK BASIS BOARD, ELM33	P09		
			1	22	17	4					P14		
			1	22	18	4					P15		
			1	22	19	4					P16		
			1	22	20	21				COMMUNICATIONS CONTROLLER	J05		1.820.718.00
			1	22	21	21				MPU AUDIO CONTROL MCH	J06		1.820.782.00
			1	22	22	7				GENERATOR UNIT MCH	J07		1.820.725.00
			1	22	22	21				GENERATOR UNIT MCH	J07		1.820.725.00
			1	22	23	4A				CONTROLLER EXTERNAL NRS	J08		1.820.816.00
			1	22	23	4B				CONTROLLER EXTERNAL NRS	J08		1.820.816.00
			1	22	23	12A				CONTROLLER EXTERNAL NRS	J08		1.820.816.00
			1	22	23	12B				CONTROLLER EXTERNAL NRS	J08		1.820.816.00
			1	22	24	4C				BUS DRIVER MCH	J09		1.820.723.00
			1	22	24	12C				BUS DRIVER MCH	J09		1.820.723.00
			1	22	25	4A				FLOPPY DISK CONTROLLER	J10		1.820.726.00

WILLI STUDER AG * SIGNAL WIRE LIST * 89/07/20 * 9:25 * PAGE 9

* TAPE TRANSPORT & AUDIO MCH * * 89/04/19 - 00

SIGNAL NAME	COLOR	MI	ASY	GRP	ELM	PNT	S	LV	TYPE	DESCRIPTION OF ELEMENT		REMARK	ELEMENT NR.
<<-- CONT.OF			1	22	25	48				FLOPPY DISK CONTROLLER	J10		1.820.726.00
+ 0.0			1	22	26	1				FLOPPY DISK CONNECTOR	P13		1.820.000.00
			1	22	26	3				FLOPPY DISK CONNECTOR	P13		1.820.000.00
			1	22	26	5				FLOPPY DISK CONNECTOR	P13		1.820.000.00
			1	22	26	7				FLOPPY DISK CONNECTOR	P13		1.820.000.00
			1	22	26	9				FLOPPY DISK CONNECTOR	P13		1.820.000.00
			1	22	26	11				FLOPPY DISK CONNECTOR	P13		1.820.000.00
			1	22	26	13				FLOPPY DISK CONNECTOR	P13		1.820.000.00
			1	22	26	15				FLOPPY DISK CONNECTOR	P13		1.820.000.00
			1	22	26	17				FLOPPY DISK CONNECTOR	P13		1.820.000.00
			1	22	26	19				FLOPPY DISK CONNECTOR	P13		1.820.000.00
			1	22	26	21				FLOPPY DISK CONNECTOR	P13		1.820.000.00
			1	22	26	23				FLOPPY DISK CONNECTOR	P13		1.820.000.00
			1	22	26	25				FLOPPY DISK CONNECTOR	P13		1.820.000.00
			1	22	26	27				FLOPPY DISK CONNECTOR	P13		1.820.000.00
			1	22	26	29				FLOPPY DISK CONNECTOR	P13		1.820.000.00
			1	22	26	31				FLOPPY DISK CONNECTOR	P13		1.820.000.00
			1	22	26	33				FLOPPY DISK CONNECTOR	P13		1.820.000.00
			1	22	50	1				TO AUDIO RACK CH 1 TO 8	P10		
			1	22	50	2				TO AUDIO RACK CH 1 TO 8	P10		
			1	22	50	10				TO AUDIO RACK CH 1 TO 8	P10		
			1	22	50	13				TO AUDIO RACK CH 1 TO 8	P10		
			1	22	50	16				TO AUDIO RACK CH 1 TO 8	P10		
			1	22	50	19				TO AUDIO RACK CH 1 TO 8	P10		
			1	22	50	22				TO AUDIO RACK CH 1 TO 8	P10		
			1	22	50	24				TO AUDIO RACK CH 1 TO 8	P10		
			1	22	50	26				TO AUDIO RACK CH 1 TO 8	P10		
			1	22	50	28				TO AUDIO RACK CH 1 TO 8	P10		
			1	22	50	30				TO AUDIO RACK CH 1 TO 8	P10		
			1	22	50	32				TO AUDIO RACK CH 1 TO 8	P10		
			1	22	50	34				TO AUDIO RACK CH 1 TO 8	P10		
			1	22	50	36				TO AUDIO RACK CH 1 TO 8	P10		
			1	22	50	38				TO AUDIO RACK CH 1 TO 8	P10		
			1	22	50	40				TO AUDIO RACK CH 1 TO 8	P10		
			1	22	51	1				TO AUDIO RACK CH 9 TO 16	P11		
			1	22	51	2				TO AUDIO RACK CH 9 TO 16	P11		
			1	22	51	10				TO AUDIO RACK CH 9 TO 16	P11		
			1	22	51	13				TO AUDIO RACK CH 9 TO 16	P11		
			1	22	51	16				TO AUDIO RACK CH 9 TO 16	P11		
			1	22	51	19				TO AUDIO RACK CH 9 TO 16	P11		
			1	22	51	22				TO AUDIO RACK CH 9 TO 16	P11		
			1	22	51	24				TO AUDIO RACK CH 9 TO 16	P11		
			1	22	51	26				TO AUDIO RACK CH 9 TO 16	P11		
			1	22	51	28				TO AUDIO RACK CH 9 TO 16	P11		
			1	22	51	30				TO AUDIO RACK CH 9 TO 16	P11		
			1	22	51	32				TO AUDIO RACK CH 9 TO 16	P11		
			1	22	51	34				TO AUDIO RACK CH 9 TO 16	P11		
			1	22	51	36				TO AUDIO RACK CH 9 TO 16	P11		
			1	22	51	38				TO AUDIO RACK CH 9 TO 16	P11		
			1	22	51	40				TO AUDIO RACK CH 9 TO 16	P11		
			1	22	52	1				TO AUDIO RACK CH 17 TO 24	P12		
			1	22	52	2				TO AUDIO RACK CH 17 TO 24	P12		
			1	22	52	10				TO AUDIO RACK CH 17 TO 24	P12		
			1	22	52	13				TO AUDIO RACK CH 17 TO 24	P12		

WILLI STUDER AG * SIGNAL WIRE LIST * 89/07/20 * 9:25 * PAGE 10

* TAPE TRANSPORT & AUDIO MCH * * 89/04/19 - 00

SIGNAL NAME	COLOR	MI	ASY	GRP	ELM	PNT	S	LV	TYPE	DESCRIPTION OF ELEMENT		REMARK	ELEMENT NR.
<<-- CONT.OF			1	22	52	16				TO AUDIO RACK CH 17 TO 24	P12		
+ 0.0			1	22	52	19				TO AUDIO RACK CH 17 TO 24	P12		
			1	22	52	22				TO AUDIO RACK CH 17 TO 24	P12		
			1	22	52	24				TO AUDIO RACK CH 17 TO 24	P12		
			1	22	52	26				TO AUDIO RACK CH 17 TO 24	P12		
			1	22	52	28				TO AUDIO RACK CH 17 TO 24	P12		
			1	22	52	30				TO AUDIO RACK CH 17 TO 24	P12		
			1	22	52	32				TO AUDIO RACK CH 17 TO 24	P12		
			1	22	52	34				TO AUDIO RACK CH 17 TO 24	P12		
			1	22	52	36				TO AUDIO RACK CH 17 TO 24	P12		
			1	22	52	38				TO AUDIO RACK CH 17 TO 24	P12		
			1	22	52	40				TO AUDIO RACK CH 17 TO 24	P12		
	6		1	23	1	5			L	BICODE/PILOT	J01		
	6		1	23	5	5			L	BICODE	J05		
			1	23	8	1			B	CONN. PARALLEL REMOTE CONTROL	J07		
	7		1	23	9	4			B	LOCAL CONTROL UNIT	J08		
	9		1	23	9	5			B	LOCAL CONTROL UNIT	J08		
	1		1	23	9	6			B	LOCAL CONTROL UNIT	J08		
	5		1	23	9	8			B	LOCAL CONTROL UNIT	J08		
	1		1	23	12	1			B	MASTER TALLIES	J11		
	9		1	23	12	5			B	MASTER TALLIES	J11		
	S		1	23	13	1			L	COMP. VIDEO IN	J12		
	S		1	23	14	1			L	COMP. VIDEO IN	J13		
			1	24	1	15				NRS CONTROL CONN. CH 17 TO 24			
			1	24	2	15				NRS CONTROL CONN. CH 9 TO 16			
			1	24	3	15				NRS CONTROL CONN. CH 1 TO 8			
			1	25	1	5			B	CONN. AUTOLOCATOR, REMOTE TIMER	J01		
			1	25	2	1			B	CONNECTOR SYNCHRONIZER CONTROL	J02		
			1	25	2	14			B	CONNECTOR SYNCHRONIZER CONTROL	J02		
			1	25	3	1			B	CONN. PARALLEL REMOTE CONTROL	J03		
			1	26	1	1				FROM PAR. REM. IF	P01		
			1	26	2	9				TO GRP25, ELM01 (REMOTE PANEL)	P02		
	0		1	26	3	1				TO PAR. REM. IF	J01		
			1	27	1	1				TO GRP26, ELM01 (SERIAL REM. IF)	P01		
			1	27	2	1				FROM GRP20, ELM16 (BASIS BOARD)	P02		
			1	27	2	2				FROM GRP20, ELM16 (BASIS BOARD)	P02		
			1	27	3	1				TO GRP25, ELM02 (SYNCHRONIZER)	P03		
			1	27	3	2				TO GRP25, ELM02 (SYNCHRONIZER)	P03		
			1	27	4	1				TO CONN. PARALLEL REMOTE CONTR.	P04		
			1	27	6	1					P05		54.99.0213
			1	28	1	1				FROM B. BOARD TAPE DECK, ELM 19	P01		
			1	28	1	2				FROM B. BOARD TAPE DECK, ELM 19	P01		
			1	28	1	16				FROM B. BOARD TAPE DECK, ELM 19	P01		
			1	28	2	1				TO VU-METER PANEL	P02		
			1	28	2	2				TO VU-METER PANEL	P02		
			1	28	2	16				TO VU-METER PANEL	P02		
			1	29	5	1				FROM GRP20, ELM02 (BASIS B. TD)	P01		
			1	29	5	2				FROM GRP20, ELM02 (BASIS B. TD)	P01		
			1	29	5	16				FROM GRP20, ELM02 (BASIS B. TD)	P01		
			1	29	6	1				TO SPOOLING M. DRIVE AMP. RIGHT	P02		
			1	29	6	2				TO SPOOLING M. DRIVE AMP. RIGHT	P02		
			1	29	6	16				TO SPOOLING M. DRIVE AMP. RIGHT	P02		
			1	30	1	1			BX	SUPPLY INPUT	J03		
			1	30	2	1				FROM GRP29, ELM06	P01		

```
*****************************************************************************************************************************
*   WILLI STUDER AG   *   S I G N A L   W I R E   L I S T          * 89/07/20 *  9:25 *  P A G E  11  *
*****************************************************************************************************************************
*                       * TAPE TRANSPORT & AUDIO MCH *                          * 89/04/19 - 00                              *
*****************************************************************************************************************************

SIGNAL NAME   COLOR  MI  ASY GRP ELM PNT  S  LV  TYPE           DESCRIPTION OF ELEMENT                    REMARK     ELEMENT NR.
-----------  -----  --  ---------------  -  --  -------------  ---------------------------------------  ---------  ----------------
<<-- CONT.OF              1  30   2   2                        FROM GRP29, ELM06                 P01
+ 0.0                     1  30   2  16                        FROM GRP29, ELM06                 P01
                          1  31   1   1                        FROM DISTRIBUTION BOARD (ELM20)   P01
                          1  31   1   2                        FROM DISTRIBUTION BOARD (ELM20)   P01
                          1  31   2   3           BX           DC OUTPUT (GRP35, ELM53)          P02
                          1  31   2   4           BX           DC OUTPUT (GRP35, ELM53)          P02
                          1  31   2   7           BX           DC OUTPUT (GRP35, ELM53)          P02
                          1  32   1   1                        FROM DISTRIBUTION BOARD (ELM21)   P01
                          1  32   1   2                        FROM DISTRIBUTION BOARD (ELM21)   P01
                          1  32   2   1           BX           DC OUTPUT (GRP35, ELM55)          P02
                          1  32   2   4           BX           DC OUTPUT (GRP35, ELM55)          P02
                          1  32   2   7           BX           DC OUTPUT (GRP35, ELM55)          P02
                          1  32   2   8           BX           DC OUTPUT (GRP35, ELM55)          P02
                          1  33   1   1           BX           SUPPLY INPUT                      J03
                          1  33   2   1                        FROM GRP20, ELM01 (BASIS B. TD)   P01
                          1  33   2   2                        FROM GRP20, ELM01 (BASIS B. TD)   P01
                          1  33   2  16                        FROM GRP20, ELM01 (BASIS B. TD)   P01
                    0     1  35   1   3           U            WIRE FIELD
                    0     1  35   1   4           U            WIRE FIELD
                    0     1  35   1   5           U            WIRE FIELD
                    0     1  35   1  10           U            WIRE FIELD
                    0     1  35   1  11           U            WIRE FIELD
                    0     1  35   1  12           U            WIRE FIELD
                          1  35   1  14                        WIRE FIELD
                    0     1  35   1  17           U            WIRE FIELD
                    0     1  35   1  18           U            WIRE FIELD
                          1  35   1  21                        WIRE FIELD
                          1  35   1  22                        WIRE FIELD
                          1  35   1  23                        WIRE FIELD
                          1  35   1  24                        WIRE FIELD
                          1  35   1  25                        WIRE FIELD
                          1  35   1  30                        WIRE FIELD
                    0     1  35   1  32           L            WIRE FIELD
                    0     1  35   1  36           L            WIRE FIELD
                    0     1  35   1  37           L            WIRE FIELD
                    0     1  35   1  39           L            WIRE FIELD
                    0     1  35   1  40           L            WIRE FIELD
                    0     1  35   1  41           L            WIRE FIELD
                    0     1  35   1  42           L            WIRE FIELD
                    0     1  35   1  43           L            WIRE FIELD
                    0     1  35   1  44           L            WIRE FIELD
                    0     1  35   1  45           L            WIRE FIELD
                    0     1  35   1  46           L            WIRE FIELD
                          1  35   1  47                        WIRE FIELD
                          1  35   1  48                        WIRE FIELD
                          1  35   1  49                        WIRE FIELD
                          1  35   1  50                        WIRE FIELD
                          1  35   1  51                        WIRE FIELD
                          1  35   1  52                        WIRE FIELD
                          1  35   1  53                        WIRE FIELD
                          1  35  20   1                        TO GRP31, ELM01                   P01
                          1  35  20   2                        TO GRP31, ELM01                   P01
                          1  35  21   1                        TO GRP32, ELM01                   P02
                          1  35  21   2                        TO GRP32, ELM01                   P02

*****************************************************************************************************************************
*   WILLI STUDER AG   *   S I G N A L   W I R E   L I S T          * 89/07/20 *  9:25 *  P A G E  12  *
*****************************************************************************************************************************
*                       * TAPE TRANSPORT & AUDIO MCH *                          * 89/04/19 - 00                              *
*****************************************************************************************************************************

SIGNAL NAME   COLOR  MI  ASY GRP ELM PNT  S  LV  TYPE           DESCRIPTION OF ELEMENT                    REMARK     ELEMENT NR.
-----------  -----  --  ---------------  -  --  -------------  ---------------------------------------  ---------  ----------------
<<-- CONT.OF              1  35  22   3           BX           AUDIO RACK CH  1 TO  8            J01
+ 0.0                     1  35  22   4           BX           AUDIO RACK CH  1 TO  8            J01
                          1  35  23   3           BX           AUDIO RACK CH  9 TO 16            J02
                          1  35  23   4           BX           AUDIO RACK CH  9 TO 16            J02
                          1  35  24   3           BX           AUDIO RACK CH 17 TO 24            J03
                          1  35  24   4           BX           AUDIO RACK CH 17 TO 24            J03
                    0     1  35  52   1           AX           FROM GRP30, ELM01                 P03
                    0     1  35  53   3           AX           FROM GRP31, ELM02                 P04
                    0     1  35  53   4           AX           FROM GRP31, ELM02                 P04
                    0     1  35  53   7           AX           FROM GRP31, ELM02                 P04
                    0     1  35  55   1           AX           FROM GRP32, ELM02                 P06
                    0     1  35  55   4           AX           FROM GRP32, ELM02                 P06
                    0     1  35  55   7           AX           FROM GRP32, ELM02                 P06
                    0     1  35  55   8           AX           FROM GRP32, ELM02                 P06
                    0     1  35  57   1           AX           TO GRP33, ELM01                   P08
                    0     1  35  59   5           M            TO GRP20, ELM70                   P10
                    0     1  35  59   6           M            TO GRP20, ELM70                   P10
                    0     1  35  59   8           M            TO GRP20, ELM70                   P10
                    0     1  35  59   9           M            TO GRP20, ELM70                   P10
                    0     1  35  59  10           M            TO GRP20, ELM70                   P10
                    0     1  35  59  13           M            TO GRP20, ELM70                   P10
                    0     1  35  59  14           M            TO GRP20, ELM70                   P10
                    0     1  35  59  21           M            TO GRP20, ELM70                   P10
                    0     1  35  61   3           AX           TO GRP21, ELM08                   P12
                    0     1  35  61   4           AX           TO GRP21, ELM08                   P12
                          1  36   1   1                        TACHO SENSOR                      P01                1.820.771.00
                          1  36   1   2                        TACHO SENSOR                      P01                1.820.771.00
                          1  37   1   1                        TACHO SENSOR                      P01                1.820.771.00
                          1  37   1   2                        TACHO SENSOR                      P01                1.820.771.00
                          1  38   1  12           F            FROM GRP39, ELM02                 J01
                          1  39   1   1                        FROM GRP20, ELM03 (BASIS B. TD)   P01
                          1  39   1   2                        FROM GRP20, ELM03 (BASIS B. TD)   P01
                          1  39   1   9                        FROM GRP20, ELM03 (BASIS B. TD)   P01
                          1  39   1  16                        FROM GRP20, ELM03 (BASIS B. TD)   P01
                          1  39   2  12           M            TO GRP38, ELM01 (CAPSTAN MOTOR)   P02
                          1  42   1   1                        FROM GRP20, ELM12 (BASIS B. TD)   P01
                          1  42   1   2                        FROM GRP20, ELM12 (BASIS B. TD)   P01
                          1  43   1   1                        FROM GRP20, ELM13 (BASIS B. TD)   P01
                          1  43   1   2                        FROM GRP20, ELM13 (BASIS B. TD)   P01
                          1  44   1   1                        FROM GRP20, ELM06                 P01
                          1  44   1   2                        FROM GRP20, ELM06                 P01
                          1  45   1   1                        FROM GRP20, ELM11                 P01
                          1  45   1   2                        FROM GRP20, ELM11                 P01
                          1  46   1   1                        FROM GRP20, ELM07                 P01
                          1  46   1   2                        FROM GRP20, ELM07                 P01
                          1  47   1   1                        FROM GRP20, ELM08 (BASIS B. TD)   P01
                          1  47   1   2                        FROM GRP20, ELM08 (BASIS B. TD)   P01
                          1  48   1   1                        FROM GRP50, ELM03 (DISPLAY DRIVER)
                          1  48   1   2                        FROM GRP50, ELM03 (DISPLAY DRIVER)
                          1  48   2   1                        CONNECTOR EDIT ASSEMBLY
                          1  48   2   2                        CONNECTOR EDIT ASSEMBLY
                          1  49   1   1                        FROM GRP48, ELM02 (PUSHBUTTON BOARD)
                          1  49   1   2                        FROM GRP48, ELM02 (PUSHBUTTON BOARD)
                          1  49   2   5                        WIRE FIELD
```

* WILLI STUDER AG * S I G N A L W I R E L I S T * 89/07/20 * 9:25 * P A G E 13 *

* * TAPE TRANSPORT & AUDIO MCH * * 89/04/19 - 00 *

SIGNAL NAME	COLOR	MI	ASY	GRP	ELM	PNT	S	LV	TYPE	DESCRIPTION OF ELEMENT		REMARK	ELEMENT NR.
<<-- CONT.OF			1	50	1	1				FROM GRP20, ELM15 (BASIS B. TD)	P01		
+ 0.0			1	50	1	2				FROM GRP20, ELM15 (BASIS B. TD)	P01		
			1	50	2	1				CONNECTOR PUSHBUTTON ASSEMBLY	P03		
			1	50	2	2				CONNECTOR PUSHBUTTON ASSEMBLY	P03		
			1	50	3	1				CONNECTOR COMMAND UNIT	P02		
			1	50	3	2				CONNECTOR COMMAND UNIT	P02		
			1	50	4	1				CONNECTOR LCD DISPLAY UNIT	P04		
			1	50	4	16				CONNECTOR LCD DISPLAY UNIT	P04		
			1	51	1	1				FROM GRP50,ELM02 (DISPLAY DRIVER)			
			1	51	1	2				FROM GRP50,ELM02 (DISPLAY DRIVER)			
			1	52	1	1				FROM GRP50, ELM04 (DISPLAY DRIVER)			
			1	52	1	16				FROM GRP50, ELM04 (DISPLAY DRIVER)			
	1		1	53	1	1			B	CONNECTOR DATA BACK UP, FRONT P.	J01		
			1	59	1	11				FROM GRP20, ELM14 (BASIS B. TD)	P01		
			1	59	1	12				FROM GRP20, ELM14 (BASIS B. TD)	P01		
			1	60	1	1				FROM GR. 20 ELM 08	P01		
			1	60	1	2				FROM GR. 20 ELM 08	P01		
			1	60	2	1				FROM GR. 20 ELM 11	P02		
			1	60	2	2				FROM GR. 20 ELM 11	P02		
			1	60	3	1				FROM GR. 20 ELM 10	P03		
			1	60	3	2				FROM GR. 20 ELM 10	P03		
			1	60	4	1				FROM GR. 20 ELM 09	P04		
			1	60	4	2				FROM GR. 20 ELM 09	P04		
			1	60	5	1				TO TAPE LIFT MOTOR, RIGHT	P05		
			1	60	5	2				TO TAPE LIFT MOTOR, RIGHT	P05		
			1	60	6	1				TO MOVE SENSOR	P06		
			1	60	6	2				TO MOVE SENSOR	P06		
			1	60	7	1				TO TACHO SENSOR SP. MOTOR RIGHT	P07		
			1	60	7	2				TO TACHO SENSOR SP. MOTOR RIGHT	P07		
			1	60	8	1				TO TACHO SENSOR SP. MOTOR LEFT	P08		
			1	60	8	2				TO TACHO SENSOR SP. MOTOR LEFT	P08		
			2	1	7	16				REPRODUCE HEAD, CH 01 TO 08	P07		
			2	1	8	16				REPRODUCE HEAD, CH 09 TO 16	P08		
			2	1	9	16				REPRODUCE HEAD, CH 17 TO 24	P09		
			2	1	10	1				HEAD BLOCK IDENTIFIER	P10		1.820.795.00
			2	1	10	13				HEAD BLOCK IDENTIFIER	P10		1.820.795.00
			2	1	10	14				HEAD BLOCK IDENTIFIER	P10		1.820.795.00
			2	1	10	23				HEAD BLOCK IDENTIFIER	P10		1.820.795.00
			2	1	10	24				HEAD BLOCK IDENTIFIER	P10		1.820.795.00
			2	2	1	16				INPUT	J01		
			2	2	2	16				OUTPUT	P01		
			2	3	1	16				INPUT	J01		
			2	3	2	16				OUTPUT	P01		
			2	4	1	16				INPUT	J01		
			2	4	2	16				OUTPUT	P01		
			3	1	1	2				LINE AMPLIFIER, CH 1	J01		1.820.715.00
			3	1	1	5				LINE AMPLIFIER, CH 1	J01		1.820.715.00
			3	1	1	9				LINE AMPLIFIER, CH 1	J01		1.820.715.00
			3	1	1	13				LINE AMPLIFIER, CH 1	J01		1.820.715.00
			3	1	1	21				LINE AMPLIFIER, CH 1	J01		1.820.715.00
			3	1	2	1B				CONTROLLER INTERNAL NRS CH 1	J02		1.820.815.00
			3	1	2	2A				CONTROLLER INTERNAL NRS CH 1	J02		1.820.815.00
			3	1	2	3A				CONTROLLER INTERNAL NRS CH 1	J02		1.820.815.00
			3	1	2	3B				CONTROLLER INTERNAL NRS CH 1	J02		1.820.815.00

* WILLI STUDER AG * S I G N A L W I R E L I S T * 89/07/20 * 9:25 * P A G E 14 *

* * TAPE TRANSPORT & AUDIO MCH * * 89/04/19 - 00 *

SIGNAL NAME	COLOR	MI	ASY	GRP	ELM	PNT	S	LV	TYPE	DESCRIPTION OF ELEMENT		REMARK	ELEMENT NR.
<<-- CONT.OF			3	1	2	4B				CONTROLLER INTERNAL NRS CH 1	J02		1.820.815.00
+ 0.0			3	1	2	5A				CONTROLLER INTERNAL NRS CH 1	J02		1.820.815.00
			3	1	2	6A				CONTROLLER INTERNAL NRS CH 1	J02		1.820.815.00
			3	1	2	6B				CONTROLLER INTERNAL NRS CH 1	J02		1.820.815.00
			3	1	2	9A				CONTROLLER INTERNAL NRS CH 1	J02		1.820.815.00
			3	1	2	9B				CONTROLLER INTERNAL NRS CH 1	J02		1.820.815.00
			3	1	2	13A				CONTROLLER INTERNAL NRS CH 1	J02		1.820.815.00
			3	1	2	13B				CONTROLLER INTERNAL NRS CH 1	J02		1.820.815.00
			3	1	2	17A				CONTROLLER INTERNAL NRS CH 1	J02		1.820.815.00
			3	1	2	17B				CONTROLLER INTERNAL NRS CH 1	J02		1.820.815.00
			3	1	2	20B				CONTROLLER INTERNAL NRS CH 1	J02		1.820.815.00
			3	1	2	23A				CONTROLLER INTERNAL NRS CH 1	J02		1.820.815.00
			3	1	2	31A				CONTROLLER INTERNAL NRS CH 1	J02		1.820.815.00
			3	1	2	31B				CONTROLLER INTERNAL NRS CH 1	J02		1.820.815.00
			3	1	2	32B				CONTROLLER INTERNAL NRS CH 1	J02		1.820.815.00
			3	1	3	5				REPRODUCE AMPLIFIER, CH 1	J03		1.820.710.00
			3	1	3	8				REPRODUCE AMPLIFIER, CH 1	J03		1.820.710.00
			3	1	3	11				REPRODUCE AMPLIFIER, CH 1	J03		1.820.710.00
			3	1	3	14				REPRODUCE AMPLIFIER, CH 1	J03		1.820.710.00
			3	1	3	18				REPRODUCE AMPLIFIER, CH 1	J03		1.820.710.00
			3	1	3	21				REPRODUCE AMPLIFIER, CH 1	J03		1.820.710.00
			3	1	4	5				RECORD AMPLIFIER, CH 1	J04		1.820.811.00
			3	1	4	11				RECORD AMPLIFIER, CH 1	J04		1.820.811.00
			3	1	4	14				RECORD AMPLIFIER, CH 1	J04		1.820.811.00
			3	1	4	16				RECORD AMPLIFIER, CH 1	J04		1.820.811.00
			3	1	4	21				RECORD AMPLIFIER, CH 1	J04		1.820.811.00
			3	1	5	3				HF-DRIVER, CH 1	J05		1.820.813.00
			3	1	5	4				HF-DRIVER, CH 1	J05		1.820.813.00
			3	1	5	11				HF-DRIVER, CH 1	J05		1.820.813.00
			3	1	5	16				HF-DRIVER, CH 1	J05		1.820.813.00
			3	1	5	21				HF-DRIVER, CH 1	J05		1.820.813.00
			3	1	6	2				LINE AMPLIFIER, CH 2	J06		1.820.715.00
			3	1	6	5				LINE AMPLIFIER, CH 2	J06		1.820.715.00
			3	1	6	9				LINE AMPLIFIER, CH 2	J06		1.820.715.00
			3	1	6	13				LINE AMPLIFIER, CH 2	J06		1.820.715.00
			3	1	6	21				LINE AMPLIFIER, CH 2	J06		1.820.715.00
			3	1	7	1B				CONTROLLER INTERNAL NRS CH 2	J07		1.820.815.00
			3	1	7	2A				CONTROLLER INTERNAL NRS CH 2	J07		1.820.815.00
			3	1	7	3A				CONTROLLER INTERNAL NRS CH 2	J07		1.820.815.00
			3	1	7	3B				CONTROLLER INTERNAL NRS CH 2	J07		1.820.815.00
			3	1	7	4B				CONTROLLER INTERNAL NRS CH 2	J07		1.820.815.00
			3	1	7	5A				CONTROLLER INTERNAL NRS CH 2	J07		1.820.815.00
			3	1	7	6A				CONTROLLER INTERNAL NRS CH 2	J07		1.820.815.00
			3	1	7	6B				CONTROLLER INTERNAL NRS CH 2	J07		1.820.815.00
			3	1	7	9A				CONTROLLER INTERNAL NRS CH 2	J07		1.820.815.00
			3	1	7	9B				CONTROLLER INTERNAL NRS CH 2	J07		1.820.815.00
			3	1	7	13A				CONTROLLER INTERNAL NRS CH 2	J07		1.820.815.00
			3	1	7	13B				CONTROLLER INTERNAL NRS CH 2	J07		1.820.815.00
			3	1	7	17A				CONTROLLER INTERNAL NRS CH 2	J07		1.820.815.00
			3	1	7	17B				CONTROLLER INTERNAL NRS CH 2	J07		1.820.815.00
			3	1	7	20B				CONTROLLER INTERNAL NRS CH 2	J07		1.820.815.00
			3	1	7	23A				CONTROLLER INTERNAL NRS CH 2	J07		1.820.815.00
			3	1	7	31A				CONTROLLER INTERNAL NRS CH 2	J07		1.820.815.00
			3	1	7	31B				CONTROLLER INTERNAL NRS CH 2	J07		1.820.815.00

```
*    WILLI STUDER AG    *    S I G N A L    W I R E    L I S T              * 89/07/20 *  9:25 *  P A G E  15   *
*                          * TAPE TRANSPORT & AUDIO MCH *                    * 89/04/19 - 00                      *
```

SIGNAL NAME	COLOR	MI	ASY	GRP	ELM	PNT	S	LV	TYPE	DESCRIPTION OF ELEMENT		REMARK	ELEMENT NR.
<<-- CONT.OF			3	1	7	32B				CONTROLLER INTERNAL NRS CH 2	J07		1.820.815.00
+ 0.0			3	1	8	5				REPRODUCE AMPLIFIER, CH 2	J08		1.820.710.00
			3	1	8	8				REPRODUCE AMPLIFIER, CH 2	J08		1.820.710.00
			3	1	8	11				REPRODUCE AMPLIFIER, CH 2	J08		1.820.710.00
			3	1	8	14				REPRODUCE AMPLIFIER, CH 2	J08		1.820.710.00
			3	1	8	18				REPRODUCE AMPLIFIER, CH 2	J08		1.820.710.00
			3	1	8	21				REPRODUCE AMPLIFIER, CH 2	J08		1.820.710.00
			3	1	9	5				RECORD AMPLIFIER, CH 2	J09		1.820.811.00
			3	1	9	11				RECORD AMPLIFIER, CH 2	J09		1.820.811.00
			3	1	9	14				RECORD AMPLIFIER, CH 2	J09		1.820.811.00
			3	1	9	16				RECORD AMPLIFIER, CH 2	J09		1.820.811.00
			3	1	9	21				RECORD AMPLIFIER, CH 2	J09		1.820.811.00
			3	1	10	3				HF-DRIVER, CH 2	J10		1.820.813.00
			3	1	10	4				HF-DRIVER, CH 2	J10		1.820.813.00
			3	1	10	11				HF-DRIVER, CH 2	J10		1.820.813.00
			3	1	10	16				HF-DRIVER, CH 2	J10		1.820.813.00
			3	1	10	21				HF-DRIVER, CH 2	J10		1.820.813.00
			3	1	11	2				LINE AMPLIFIER, CH 3	J11		1.820.715.00
			3	1	11	5				LINE AMPLIFIER, CH 3	J11		1.820.715.00
			3	1	11	9				LINE AMPLIFIER, CH 3	J11		1.820.715.00
			3	1	11	13				LINE AMPLIFIER, CH 3	J11		1.820.715.00
			3	1	11	21				LINE AMPLIFIER, CH 3	J11		1.820.715.00
			3	1	12	1B				CONTROLLER INTERNAL NRS CH 3	J12		1.820.815.00
			3	1	12	2A				CONTROLLER INTERNAL NRS CH 3	J12		1.820.815.00
			3	1	12	3A				CONTROLLER INTERNAL NRS CH 3	J12		1.820.815.00
			3	1	12	3B				CONTROLLER INTERNAL NRS CH 3	J12		1.820.815.00
			3	1	12	4B				CONTROLLER INTERNAL NRS CH 3	J12		1.820.815.00
			3	1	12	5A				CONTROLLER INTERNAL NRS CH 3	J12		1.820.815.00
			3	1	12	6A				CONTROLLER INTERNAL NRS CH 3	J12		1.820.815.00
			3	1	12	6B				CONTROLLER INTERNAL NRS CH 3	J12		1.820.815.00
			3	1	12	9A				CONTROLLER INTERNAL NRS CH 3	J12		1.820.815.00
			3	1	12	9B				CONTROLLER INTERNAL NRS CH 3	J12		1.820.815.00
			3	1	12	13A				CONTROLLER INTERNAL NRS CH 3	J12		1.820.815.00
			3	1	12	13B				CONTROLLER INTERNAL NRS CH 3	J12		1.820.815.00
			3	1	12	17A				CONTROLLER INTERNAL NRS CH 3	J12		1.820.815.00
			3	1	12	17B				CONTROLLER INTERNAL NRS CH 3	J12		1.820.815.00
			3	1	12	20B				CONTROLLER INTERNAL NRS CH 3	J12		1.820.815.00
			3	1	12	23A				CONTROLLER INTERNAL NRS CH 3	J12		1.820.815.00
			3	1	12	31A				CONTROLLER INTERNAL NRS CH 3	J12		1.820.815.00
			3	1	12	31B				CONTROLLER INTERNAL NRS CH 3	J12		1.820.815.00
			3	1	12	32B				CONTROLLER INTERNAL NRS CH 3	J12		1.820.815.00
			3	1	13	5				REPRODUCE AMPLIFIER, CH 3	J13		1.820.710.00
			3	1	13	8				REPRODUCE AMPLIFIER, CH 3	J13		1.820.710.00
			3	1	13	11				REPRODUCE AMPLIFIER, CH 3	J13		1.820.710.00
			3	1	13	14				REPRODUCE AMPLIFIER, CH 3	J13		1.820.710.00
			3	1	13	18				REPRODUCE AMPLIFIER, CH 3	J13		1.820.710.00
			3	1	13	21				REPRODUCE AMPLIFIER, CH 3	J13		1.820.710.00
			3	1	14	5				RECORD AMPLIFIER, CH 3	J14		1.820.811.00
			3	1	14	11				RECORD AMPLIFIER, CH 3	J14		1.820.811.00
			3	1	14	14				RECORD AMPLIFIER, CH 3	J14		1.820.811.00
			3	1	14	16				RECORD AMPLIFIER, CH 3	J14		1.820.811.00
			3	1	14	21				RECORD AMPLIFIER, CH 3	J14		1.820.811.00
			3	1	15	3				HF-DRIVER, CH 3	J15		1.820.813.00
			3	1	15	4				HF-DRIVER, CH 3	J15		1.820.813.00

```
*    WILLI STUDER AG    *    S I G N A L    W I R E    L I S T              * 89/07/20 *  9:25 *  P A G E  16   *
*                          * TAPE TRANSPORT & AUDIO MCH *                    * 89/04/19 - 00                      *
```

SIGNAL NAME	COLOR	MI	ASY	GRP	ELM	PNT	S	LV	TYPE	DESCRIPTION OF ELEMENT		REMARK	ELEMENT NR.
<<-- CONT.OF			3	1	15	11				HF-DRIVER, CH 3	J15		1.820.813.00
+ 0.0			3	1	15	16				HF-DRIVER, CH 3	J15		1.820.813.00
			3	1	15	21				HF-DRIVER, CH 3	J15		1.820.813.00
			3	1	16	2				LINE AMPLIFIER, CH 4	J16		1.820.715.00
			3	1	16	5				LINE AMPLIFIER, CH 4	J16		1.820.715.00
			3	1	16	9				LINE AMPLIFIER, CH 4	J16		1.820.715.00
			3	1	16	13				LINE AMPLIFIER, CH 4	J16		1.820.715.00
			3	1	16	21				LINE AMPLIFIER, CH 4	J16		1.820.715.00
			3	1	17	1B				CONTROLLER INTERNAL NRS CH 4	J17		1.820.815.00
			3	1	17	2A				CONTROLLER INTERNAL NRS CH 4	J17		1.820.815.00
			3	1	17	3A				CONTROLLER INTERNAL NRS CH 4	J17		1.820.815.00
			3	1	17	3B				CONTROLLER INTERNAL NRS CH 4	J17		1.820.815.00
			3	1	17	4B				CONTROLLER INTERNAL NRS CH 4	J17		1.820.815.00
			3	1	17	5A				CONTROLLER INTERNAL NRS CH 4	J17		1.820.815.00
			3	1	17	6A				CONTROLLER INTERNAL NRS CH 4	J17		1.820.815.00
			3	1	17	6B				CONTROLLER INTERNAL NRS CH 4	J17		1.820.815.00
			3	1	17	9A				CONTROLLER INTERNAL NRS CH 4	J17		1.820.815.00
			3	1	17	9B				CONTROLLER INTERNAL NRS CH 4	J17		1.820.815.00
			3	1	17	13A				CONTROLLER INTERNAL NRS CH 4	J17		1.820.815.00
			3	1	17	13B				CONTROLLER INTERNAL NRS CH 4	J17		1.820.815.00
			3	1	17	17A				CONTROLLER INTERNAL NRS CH 4	J17		1.820.815.00
			3	1	17	17B				CONTROLLER INTERNAL NRS CH 4	J17		1.820.815.00
			3	1	17	20B				CONTROLLER INTERNAL NRS CH 4	J17		1.820.815.00
			3	1	17	23A				CONTROLLER INTERNAL NRS CH 4	J17		1.820.815.00
			3	1	17	31A				CONTROLLER INTERNAL NRS CH 4	J17		1.820.815.00
			3	1	17	31B				CONTROLLER INTERNAL NRS CH 4	J17		1.820.815.00
			3	1	17	32B				CONTROLLER INTERNAL NRS CH 4	J17		1.820.815.00
			3	1	18	5				REPRODUCE AMPLIFIER, CH 4	J18		1.820.710.00
			3	1	18	8				REPRODUCE AMPLIFIER, CH 4	J18		1.820.710.00
			3	1	18	11				REPRODUCE AMPLIFIER, CH 4	J18		1.820.710.00
			3	1	18	14				REPRODUCE AMPLIFIER, CH 4	J18		1.820.710.00
			3	1	18	18				REPRODUCE AMPLIFIER, CH 4	J18		1.820.710.00
			3	1	18	21				REPRODUCE AMPLIFIER, CH 4	J18		1.820.710.00
			3	1	19	5				RECORD AMPLIFIER, CH 4	J19		1.820.811.00
			3	1	19	11				RECORD AMPLIFIER, CH 4	J19		1.820.811.00
			3	1	19	14				RECORD AMPLIFIER, CH 4	J19		1.820.811.00
			3	1	19	16				RECORD AMPLIFIER, CH 4	J19		1.820.811.00
			3	1	19	21				RECORD AMPLIFIER, CH 4	J19		1.820.811.00
			3	1	20	3				HF-DRIVER, CH 4	J20		1.820.813.00
			3	1	20	4				HF-DRIVER, CH 4	J20		1.820.813.00
			3	1	20	11				HF-DRIVER, CH 4	J20		1.820.813.00
			3	1	20	16				HF-DRIVER, CH 4	J20		1.820.813.00
			3	1	20	21				HF-DRIVER, CH 4	J20		1.820.813.00
			3	1	21	17A				BUS CONVERTER	J21		1.820.717.00
			3	1	21	17B				BUS CONVERTER	J21		1.820.717.00
			3	1	21	27A				BUS CONVERTER	J21		1.820.717.00
			3	1	21	27B				BUS CONVERTER	J21		1.820.717.00
			3	1	21	30A				BUS CONVERTER	J21		1.820.717.00
			3	1	21	30B				BUS CONVERTER	J21		1.820.717.00
			3	1	31	4				LINE INPUT/OUTPUT, CH 1	J22		
			3	1	31	7				LINE INPUT/OUTPUT, CH 1	J22		
			3	1	32	6				NOISE REDUCTION, CH 1	J23		
			3	1	32	8				NOISE REDUCTION, CH 1	J23		
			3	1	32	10				NOISE REDUCTION, CH 1	J23		

```
*    WILLI STUDER AG    *    S I G N A L    W I R E    L I S T              * 89/07/20  *   9:25  *   P A G E  17   *
*                          * TAPE TRANSPORT & AUDIO MCH *                    * 89/04/19 - 00                          *
```

SIGNAL NAME	COLOR	MI	ASY	GRP	ELM	PNT	S	LV	TYPE	DESCRIPTION OF ELEMENT		REMARK	ELEMENT NR.
<<-- CONT.OF			3	1	32	12				NOISE REDUCTION, CH 1	J23		
+ 0.0			3	1	33	4				REPRODUCE PREAMPLIFIER, CH 1	J24		
			3	1	34	4				RECORD HEAD, CH 1	J25		
			3	1	36	4				LINE INPUT/OUTPUT, CH 2	J27		
			3	1	36	7				LINE INPUT/OUTPUT, CH 2	J27		
			3	1	37	6				NOISE REDUCTION, CH 2	J28		
			3	1	37	8				NOISE REDUCTION, CH 2	J28		
			3	1	37	10				NOISE REDUCTION, CH 2	J28		
			3	1	37	12				NOISE REDUCTION, CH 2	J28		
			3	1	38	4				REPRODUCE PREAMPLIFIER, CH 2	J29		
			3	1	39	4				RECORD HEAD, CH 2	J30		
			3	1	41	4				LINE INPUT/OUTPUT, CH 3	J32		
			3	1	41	7				LINE INPUT/OUTPUT, CH 3	J32		
			3	1	42	6				NOISE REDUCTION, CH 3	J33		
			3	1	42	8				NOISE REDUCTION, CH 3	J33		
			3	1	42	10				NOISE REDUCTION, CH 3	J33		
			3	1	42	12				NOISE REDUCTION, CH 3	J33		
			3	1	43	4				REPRODUCE PREAMPLIFIER, CH 3	J34		
			3	1	44	4				RECORD HEAD, CH 3	J35		
			3	1	46	4				LINE INPUT/OUTPUT, CH 4	J37		
			3	1	46	7				LINE INPUT/OUTPUT, CH 4	J37		
			3	1	47	6				NOISE REDUCTION, CH 4	J38		
			3	1	47	8				NOISE REDUCTION, CH 4	J38		
			3	1	47	10				NOISE REDUCTION, CH 4	J38		
			3	1	47	12				NOISE REDUCTION, CH 4	J38		
			3	1	48	4				REPRODUCE PREAMPLIFIER, CH 4	J39		
			3	1	49	4				RECORD HEAD, CH 4	J40		
			3	1	70	1					P01		
			3	1	70	2					P01		
			3	1	70	10					P01		
			3	1	70	13					P01		
			3	1	70	16					P01		
			3	1	70	19					P01		
			3	1	70	22					P01		
			3	1	70	24					P01		
			3	1	70	26					P01		
			3	1	70	28					P01		
			3	1	70	30					P01		
			3	1	70	32					P01		
			3	1	70	34					P01		
			3	1	70	36					P01		
			3	1	70	38					P01		
			3	1	70	40					P01		
			3	2	1	2				LINE AMPLIFIER, CH 5	J01		1.820.715.00
			3	2	1	5				LINE AMPLIFIER, CH 5	J01		1.820.715.00
			3	2	1	9				LINE AMPLIFIER, CH 5	J01		1.820.715.00
			3	2	1	13				LINE AMPLIFIER, CH 5	J01		1.820.715.00
			3	2	1	21				LINE AMPLIFIER, CH 5	J01		1.820.715.00
			3	2	2	1B				CONTROLLER INTERNAL NRS CH 5	J02		1.820.815.00
			3	2	2	2A				CONTROLLER INTERNAL NRS CH 5	J02		1.820.815.00
			3	2	2	3A				CONTROLLER INTERNAL NRS CH 5	J02		1.820.815.00
			3	2	2	3B				CONTROLLER INTERNAL NRS CH 5	J02		1.820.815.00
			3	2	2	4B				CONTROLLER INTERNAL NRS CH 5	J02		1.820.815.00
			3	2	2	5A				CONTROLLER INTERNAL NRS CH 5	J02		1.820.815.00

```
*    WILLI STUDER AG    *    S I G N A L    W I R E    L I S T              * 89/07/20  *   9:25  *   P A G E  18   *
*                          * TAPE TRANSPORT & AUDIO MCH *                    * 89/04/19 - 00                          *
```

SIGNAL NAME	COLOR	MI	ASY	GRP	ELM	PNT	S	LV	TYPE	DESCRIPTION OF ELEMENT		REMARK	ELEMENT NR.
<<-- CONT.OF			3	2	2	6A				CONTROLLER INTERNAL NRS CH 5	J02		1.820.815.00
+ 0.0			3	2	2	6B				CONTROLLER INTERNAL NRS CH 5	J02		1.820.815.00
			3	2	2	9A				CONTROLLER INTERNAL NRS CH 5	J02		1.820.815.00
			3	2	2	9B				CONTROLLER INTERNAL NRS CH 5	J02		1.820.815.00
			3	2	2	13A				CONTROLLER INTERNAL NRS CH 5	J02		1.820.815.00
			3	2	2	13B				CONTROLLER INTERNAL NRS CH 5	J02		1.820.815.00
			3	2	2	17A				CONTROLLER INTERNAL NRS CH 5	J02		1.820.815.00
			3	2	2	17B				CONTROLLER INTERNAL NRS CH 5	J02		1.820.815.00
			3	2	2	20B				CONTROLLER INTERNAL NRS CH 5	J02		1.820.815.00
			3	2	2	23A				CONTROLLER INTERNAL NRS CH 5	J02		1.820.815.00
			3	2	2	31A				CONTROLLER INTERNAL NRS CH 5	J02		1.820.815.00
			3	2	2	31B				CONTROLLER INTERNAL NRS CH 5	J02		1.820.815.00
			3	2	2	32B				CONTROLLER INTERNAL NRS CH 5	J02		1.820.815.00
			3	2	3	5				REPRODUCE AMPLIFIER, CH 5	J03		1.820.710.00
			3	2	3	8				REPRODUCE AMPLIFIER, CH 5	J03		1.820.710.00
			3	2	3	11				REPRODUCE AMPLIFIER, CH 5	J03		1.820.710.00
			3	2	3	14				REPRODUCE AMPLIFIER, CH 5	J03		1.820.710.00
			3	2	3	18				REPRODUCE AMPLIFIER, CH 5	J03		1.820.710.00
			3	2	3	21				REPRODUCE AMPLIFIER, CH 5	J03		1.820.710.00
			3	2	4	5				RECORD AMPLIFIER, CH 5	J04		1.820.811.00
			3	2	4	11				RECORD AMPLIFIER, CH 5	J04		1.820.811.00
			3	2	4	14				RECORD AMPLIFIER, CH 5	J04		1.820.811.00
			3	2	4	16				RECORD AMPLIFIER, CH 5	J04		1.820.811.00
			3	2	4	21				RECORD AMPLIFIER, CH 5	J04		1.820.811.00
			3	2	5	3				HF-DRIVER, CH 5	J05		1.820.813.00
			3	2	5	4				HF-DRIVER, CH 5	J05		1.820.813.00
			3	2	5	11				HF-DRIVER, CH 5	J05		1.820.813.00
			3	2	5	16				HF-DRIVER, CH 5	J05		1.820.813.00
			3	2	5	21				HF-DRIVER, CH 5	J05		1.820.813.00
			3	2	6	2				LINE AMPLIFIER, CH 6	J06		1.820.715.00
			3	2	6	5				LINE AMPLIFIER, CH 6	J06		1.820.715.00
			3	2	6	9				LINE AMPLIFIER, CH 6	J06		1.820.715.00
			3	2	6	13				LINE AMPLIFIER, CH 6	J06		1.820.715.00
			3	2	6	21				LINE AMPLIFIER, CH 6	J06		1.820.715.00
			3	2	7	1B				CONTROLLER INTERNAL NRS CH 6	J07		1.820.815.00
			3	2	7	2A				CONTROLLER INTERNAL NRS CH 6	J07		1.820.815.00
			3	2	7	3A				CONTROLLER INTERNAL NRS CH 6	J07		1.820.815.00
			3	2	7	3B				CONTROLLER INTERNAL NRS CH 6	J07		1.820.815.00
			3	2	7	4B				CONTROLLER INTERNAL NRS CH 6	J07		1.820.815.00
			3	2	7	5A				CONTROLLER INTERNAL NRS CH 6	J07		1.820.815.00
			3	2	7	6A				CONTROLLER INTERNAL NRS CH 6	J07		1.820.815.00
			3	2	7	6B				CONTROLLER INTERNAL NRS CH 6	J07		1.820.815.00
			3	2	7	9A				CONTROLLER INTERNAL NRS CH 6	J07		1.820.815.00
			3	2	7	9B				CONTROLLER INTERNAL NRS CH 6	J07		1.820.815.00
			3	2	7	13A				CONTROLLER INTERNAL NRS CH 6	J07		1.820.815.00
			3	2	7	13B				CONTROLLER INTERNAL NRS CH 6	J07		1.820.815.00
			3	2	7	17A				CONTROLLER INTERNAL NRS CH 6	J07		1.820.815.00
			3	2	7	17B				CONTROLLER INTERNAL NRS CH 6	J07		1.820.815.00
			3	2	7	20B				CONTROLLER INTERNAL NRS CH 6	J07		1.820.815.00
			3	2	7	23A				CONTROLLER INTERNAL NRS CH 6	J07		1.820.815.00
			3	2	7	31A				CONTROLLER INTERNAL NRS CH 6	J07		1.820.815.00
			3	2	7	31B				CONTROLLER INTERNAL NRS CH 6	J07		1.820.815.00
			3	2	7	32B				CONTROLLER INTERNAL NRS CH 6	J07		1.820.815.00
			3	2	8	5				REPRODUCE AMPLIFIER, CH 6	J08		1.820.710.00

* WILLI STUDER AG * S I G N A L W I R E L I S T * 89/07/20 * 9:25 * P A G E 19 *
* * TAPE TRANSPORT & AUDIO MCH * * 89/04/19 - 00 *

SIGNAL NAME	COLOR	MI	ASY	GRP	ELM	PNT	S	LV	TYPE	DESCRIPTION OF ELEMENT		REMARK	ELEMENT NR.
<<-- CONT.OF			3	2	8	8				REPRODUCE AMPLIFIER, CH 6	J08		1.820.710.00
+ 0.0			3	2	8	11				REPRODUCE AMPLIFIER, CH 6	J08		1.820.710.00
			3	2	8	14				REPRODUCE AMPLIFIER, CH 6	J08		1.820.710.00
			3	2	8	18				REPRODUCE AMPLIFIER, CH 6	J08		1.820.710.00
			3	2	8	21				REPRODUCE AMPLIFIER, CH 6	J08		1.820.710.00
			3	2	9	5				RECORD AMPLIFIER, CH 6	J09		1.820.811.00
			3	2	9	11				RECORD AMPLIFIER, CH 6	J09		1.820.811.00
			3	2	9	14				RECORD AMPLIFIER, CH 6	J09		1.820.811.00
			3	2	9	16				RECORD AMPLIFIER, CH 6	J09		1.820.811.00
			3	2	9	21				RECORD AMPLIFIER, CH 6	J09		1.820.811.00
			3	2	10	3				HF-DRIVER, CH 6	J10		1.820.813.00
			3	2	10	4				HF-DRIVER, CH 6	J10		1.820.813.00
			3	2	10	11				HF-DRIVER, CH 6	J10		1.820.813.00
			3	2	10	16				HF-DRIVER, CH 6	J10		1.820.813.00
			3	2	10	21				HF-DRIVER, CH 6	J10		1.820.813.00
			3	2	11	2				LINE AMPLIFIER, CH 7	J11		1.820.715.00
			3	2	11	5				LINE AMPLIFIER, CH 7	J11		1.820.715.00
			3	2	11	9				LINE AMPLIFIER, CH 7	J11		1.820.715.00
			3	2	11	13				LINE AMPLIFIER, CH 7	J11		1.820.715.00
			3	2	11	21				LINE AMPLIFIER, CH 7	J11		1.820.715.00
			3	2	12	1B				CONTROLLER INTERNAL NRS CH 7	J12		1.820.815.00
			3	2	12	2A				CONTROLLER INTERNAL NRS CH 7	J12		1.820.815.00
			3	2	12	3A				CONTROLLER INTERNAL NRS CH 7	J12		1.820.815.00
			3	2	12	3B				CONTROLLER INTERNAL NRS CH 7	J12		1.820.815.00
			3	2	12	4B				CONTROLLER INTERNAL NRS CH 7	J12		1.820.815.00
			3	2	12	5A				CONTROLLER INTERNAL NRS CH 7	J12		1.820.815.00
			3	2	12	6A				CONTROLLER INTERNAL NRS CH 7	J12		1.820.815.00
			3	2	12	6B				CONTROLLER INTERNAL NRS CH 7	J12		1.820.815.00
			3	2	12	9A				CONTROLLER INTERNAL NRS CH 7	J12		1.820.815.00
			3	2	12	9B				CONTROLLER INTERNAL NRS CH 7	J12		1.820.815.00
			3	2	12	13A				CONTROLLER INTERNAL NRS CH 7	J12		1.820.815.00
			3	2	12	13B				CONTROLLER INTERNAL NRS CH 7	J12		1.820.815.00
			3	2	12	17A				CONTROLLER INTERNAL NRS CH 7	J12		1.820.815.00
			3	2	12	17B				CONTROLLER INTERNAL NRS CH 7	J12		1.820.815.00
			3	2	12	20B				CONTROLLER INTERNAL NRS CH 7	J12		1.820.815.00
			3	2	12	23A				CONTROLLER INTERNAL NRS CH 7	J12		1.820.815.00
			3	2	12	31A				CONTROLLER INTERNAL NRS CH 7	J12		1.820.815.00
			3	2	12	31B				CONTROLLER INTERNAL NRS CH 7	J12		1.820.815.00
			3	2	12	32B				CONTROLLER INTERNAL NRS CH 7	J12		1.820.815.00
			3	2	13	5				REPRODUCE AMPLIFIER, CH 7	J13		1.820.710.00
			3	2	13	8				REPRODUCE AMPLIFIER, CH 7	J13		1.820.710.00
			3	2	13	11				REPRODUCE AMPLIFIER, CH 7	J13		1.820.710.00
			3	2	13	14				REPRODUCE AMPLIFIER, CH 7	J13		1.820.710.00
			3	2	13	18				REPRODUCE AMPLIFIER, CH 7	J13		1.820.710.00
			3	2	13	21				REPRODUCE AMPLIFIER, CH 7	J13		1.820.710.00
			3	2	14	5				RECORD AMPLIFIER, CH 7	J14		1.820.811.00
			3	2	14	11				RECORD AMPLIFIER, CH 7	J14		1.820.811.00
			3	2	14	14				RECORD AMPLIFIER, CH 7	J14		1.820.811.00
			3	2	14	16				RECORD AMPLIFIER, CH 7	J14		1.820.811.00
			3	2	14	21				RECORD AMPLIFIER, CH 7	J14		1.820.811.00
			3	2	15	3				HF-DRIVER, CH 7	J15		1.820.813.00
			3	2	15	4				HF-DRIVER, CH 7	J15		1.820.813.00
			3	2	15	11				HF-DRIVER, CH 7	J15		1.820.813.00
			3	2	15	16				HF-DRIVER, CH 7	J15		1.820.813.00

* WILLI STUDER AG * S I G N A L W I R E L I S T * 89/07/20 * 9:25 * P A G E 20 *
* * TAPE TRANSPORT & AUDIO MCH * * 89/04/19 - 00 *

SIGNAL NAME	COLOR	MI	ASY	GRP	ELM	PNT	S	LV	TYPE	DESCRIPTION OF ELEMENT		REMARK	ELEMENT NR.
<<-- CONT.OF			3	2	15	21				HF-DRIVER, CH 7	J15		1.820.813.00
+ 0.0			3	2	16	2				LINE AMPLIFIER, CH 8	J16		1.820.715.00
			3	2	16	5				LINE AMPLIFIER, CH 8	J16		1.820.715.00
			3	2	16	9				LINE AMPLIFIER, CH 8	J16		1.820.715.00
			3	2	16	13				LINE AMPLIFIER, CH 8	J16		1.820.715.00
			3	2	16	21				LINE AMPLIFIER, CH 8	J16		1.820.715.00
			3	2	17	1B				CONTROLLER INTERNAL NRS CH 8	J17		1.820.815.00
			3	2	17	2A				CONTROLLER INTERNAL NRS CH 8	J17		1.820.815.00
			3	2	17	3A				CONTROLLER INTERNAL NRS CH 8	J17		1.820.815.00
			3	2	17	3B				CONTROLLER INTERNAL NRS CH 8	J17		1.820.815.00
			3	2	17	4B				CONTROLLER INTERNAL NRS CH 8	J17		1.820.815.00
			3	2	17	5A				CONTROLLER INTERNAL NRS CH 8	J17		1.820.815.00
			3	2	17	6A				CONTROLLER INTERNAL NRS CH 8	J17		1.820.815.00
			3	2	17	6B				CONTROLLER INTERNAL NRS CH 8	J17		1.820.815.00
			3	2	17	9A				CONTROLLER INTERNAL NRS CH 8	J17		1.820.815.00
			3	2	17	9B				CONTROLLER INTERNAL NRS CH 8	J17		1.820.815.00
			3	2	17	13A				CONTROLLER INTERNAL NRS CH 8	J17		1.820.815.00
			3	2	17	13B				CONTROLLER INTERNAL NRS CH 8	J17		1.820.815.00
			3	2	17	17A				CONTROLLER INTERNAL NRS CH 8	J17		1.820.815.00
			3	2	17	17B				CONTROLLER INTERNAL NRS CH 8	J17		1.820.815.00
			3	2	17	20B				CONTROLLER INTERNAL NRS CH 8	J17		1.820.815.00
			3	2	17	23A				CONTROLLER INTERNAL NRS CH 8	J17		1.820.815.00
			3	2	17	31A				CONTROLLER INTERNAL NRS CH 8	J17		1.820.815.00
			3	2	17	31B				CONTROLLER INTERNAL NRS CH 8	J17		1.820.815.00
			3	2	17	32B				CONTROLLER INTERNAL NRS CH 8	J17		1.820.815.00
			3	2	18	5				REPRODUCE AMPLIFIER, CH 8	J18		1.820.710.00
			3	2	18	8				REPRODUCE AMPLIFIER, CH 8	J18		1.820.710.00
			3	2	18	11				REPRODUCE AMPLIFIER, CH 8	J18		1.820.710.00
			3	2	18	14				REPRODUCE AMPLIFIER, CH 8	J18		1.820.710.00
			3	2	18	18				REPRODUCE AMPLIFIER, CH 8	J18		1.820.710.00
			3	2	18	21				REPRODUCE AMPLIFIER, CH 8	J18		1.820.710.00
			3	2	19	5				RECORD AMPLIFIER, CH 8	J19		1.820.811.00
			3	2	19	11				RECORD AMPLIFIER, CH 8	J19		1.820.811.00
			3	2	19	14				RECORD AMPLIFIER, CH 8	J19		1.820.811.00
			3	2	19	16				RECORD AMPLIFIER, CH 8	J19		1.820.811.00
			3	2	19	21				RECORD AMPLIFIER, CH 8	J19		1.820.811.00
			3	2	20	3				HF-DRIVER, CH 8	J20		1.820.813.00
			3	2	20	4				HF-DRIVER, CH 8	J20		1.820.813.00
			3	2	20	11				HF-DRIVER, CH 8	J20		1.820.813.00
			3	2	20	16				HF-DRIVER, CH 8	J20		1.820.813.00
			3	2	20	21				HF-DRIVER, CH 8	J20		1.820.813.00
			3	2	21	17A				BUS CONVERTER	J21		1.820.717.00
			3	2	21	17B				BUS CONVERTER	J21		1.820.717.00
			3	2	21	27A				BUS CONVERTER	J21		1.820.717.00
			3	2	21	27B				BUS CONVERTER	J21		1.820.717.00
			3	2	21	30A				BUS CONVERTER	J21		1.820.717.00
			3	2	21	30B				BUS CONVERTER	J21		1.820.717.00
			3	2	31	4				LINE INPUT/OUTPUT, CH 5	J22		
			3	2	31	7				LINE INPUT/OUTPUT, CH 5	J22		
			3	2	32	6				NOISE REDUCTION, CH 5	J23		
			3	2	32	8				NOISE REDUCTION, CH 5	J23		
			3	2	32	10				NOISE REDUCTION, CH 5	J23		
			3	2	32	12				NOISE REDUCTION, CH 5	J23		
			3	2	33	4				REPRODUCE PREAMPLIFIER, CH 5	J24		

```
*    WILLI STUDER AG   *    S I G N A L    W I R E    L I S T              * 89/07/20  *   9:25  *   P A G E  21   *
*                           * TAPE TRANSPORT & AUDIO MCH *                   * 89/04/19 - 00                          *
```

SIGNAL NAME	COLOR	MI	ASY	GRP	ELM	PNT	S	LV	TYPE	DESCRIPTION OF ELEMENT		REMARK	ELEMENT NR.
<<-- CONT.OF			3	2	34	4				RECORD HEAD, CH 5	J25		
+ 0.0			3	2	36	4				LINE INPUT/OUTPUT, CH 6	J27		
			3	2	36	7				LINE INPUT/OUTPUT, CH 6	J27		
			3	2	37	6				NOISE REDUCTION, CH 6	J28		
			3	2	37	8				NOISE REDUCTION, CH 6	J28		
			3	2	37	10				NOISE REDUCTION, CH 6	J28		
			3	2	37	12				NOISE REDUCTION, CH 6	J28		
			3	2	38	4				REPRODUCE PREAMPLIFIER, CH 6	J29		
			3	2	39	4				RECORD HEAD, CH 6	J30		
			3	2	41	4				LINE INPUT/OUTPUT, CH 7	J32		
			3	2	41	7				LINE INPUT/OUTPUT, CH 7	J32		
			3	2	42	6				NOISE REDUCTION, CH 7	J33		
			3	2	42	8				NOISE REDUCTION, CH 7	J33		
			3	2	42	10				NOISE REDUCTION, CH 7	J33		
			3	2	42	12				NOISE REDUCTION, CH 7	J33		
			3	2	43	4				REPRODUCE PREAMPLIFIER, CH 7	J34		
			3	2	44	4				RECORD HEAD, CH 7	J35		
			3	2	46	4				LINE INPUT/OUTPUT, CH 8	J37		
			3	2	46	7				LINE INPUT/OUTPUT, CH 8	J37		
			3	2	47	6				NOISE REDUCTION, CH 8	J38		
			3	2	47	8				NOISE REDUCTION, CH 8	J38		
			3	2	47	10				NOISE REDUCTION, CH 8	J38		
			3	2	47	12				NOISE REDUCTION, CH 8	J38		
			3	2	48	4				REPRODUCE PREAMPLIFIER, CH 8	J39		
			3	2	49	4				RECORD HEAD, CH 8	J40		
			3	2	70	1					P01		
			3	2	70	2					P01		
			3	2	70	10					P01		
			3	2	70	13					P01		
			3	2	70	16					P01		
			3	2	70	19					P01		
			3	2	70	22					P01		
			3	2	70	24					P01		
			3	2	70	26					P01		
			3	2	70	28					P01		
			3	2	70	30					P01		
			3	2	70	32					P01		
			3	2	70	34					P01		
			3	2	70	36					P01		
			3	2	70	38					P01		
			3	2	70	40					P01		
			3	3	1	3				SUPPLY PREAMPLIFIER CH 1 TO 8	J01		
			3	3	2	3			BX	SUPPLY ASY03, GRP01	J02		
			3	3	2	4			BX	SUPPLY ASY03, GRP01	J02		
			3	3	3	3			BX	SUPPLY ASY03, GRP02	J03		
			3	3	3	4			BX	SUPPLY ASY03, GRP02	J03		
			3	3	4	3			BX	SUPPLY CONNECTOR	J04		
			3	3	4	4			BX	SUPPLY CONNECTOR	J04		
			3	3	5	3			BX	SUPPLY ASY03, GRP04 (NRS OPTION)	J05		
			3	3	5	4			BX	SUPPLY ASY03, GRP04 (NRS OPTION)	J05		
			3	4	1	11				NOISE REDUCTION UNIT CH 1	J11		
			3	4	1	16				NOISE REDUCTION UNIT CH 1	J11		
	0		3	4	10	3			AX	TO GRP03, ELM05	P10		
			3	4	10	4			AX	TO GRP03, ELM05	P10		

```
*    WILLI STUDER AG   *    S I G N A L    W I R E    L I S T              * 89/07/20  *   9:25  *   P A G E  22   *
*                           * TAPE TRANSPORT & AUDIO MCH *                   * 89/04/19 - 00                          *
```

SIGNAL NAME	COLOR	MI	ASY	GRP	ELM	PNT	S	LV	TYPE	DESCRIPTION OF ELEMENT		REMARK	ELEMENT NR.
<<-- CONT.OF	0		3	4	11	6			D	TO GRP01, ELM32 (AUDIO BASIS B.)	P11		
+ 0.0	S		3	4	11	8			D	TO GRP01, ELM32 (AUDIO BASIS B.)	P11		
	0		3	4	11	10			D	TO GRP01, ELM32 (AUDIO BASIS B.)	P11		
	S		3	4	11	12			D	TO GRP01, ELM32 (AUDIO BASIS B.)	P11		
	0		3	4	21	6			D	TO GRP01, ELM37 (AUDIO BASIS B.)	P21		
	S		3	4	21	8			D	TO GRP01, ELM37 (AUDIO BASIS B.)	P21		
	0		3	4	21	10			D	TO GRP01, ELM37 (AUDIO BASIS B.)	P21		
	S		3	4	21	12			D	TO GRP01, ELM37 (AUDIO BASIS B.)	P21		
	0		3	4	31	6			D	TO GRP01, ELM42 (AUDIO BASIS B.)	P31		
	S		3	4	31	8			D	TO GRP01, ELM42 (AUDIO BASIS B.)	P31		
	0		3	4	31	10			D	TO GRP01, ELM42 (AUDIO BASIS B.)	P31		
	S		3	4	31	12			D	TO GRP01, ELM42 (AUDIO BASIS B.)	P31		
	0		3	4	41	6			D	TO GRP01, ELM47 (AUDIO BASIS B.)	P41		
	S		3	4	41	8			D	TO GRP01, ELM47 (AUDIO BASIS B.)	P41		
	0		3	4	41	10			D	TO GRP01, ELM47 (AUDIO BASIS B.)	P41		
	S		3	4	41	12			D	TO GRP01, ELM47 (AUDIO BASIS B.)	P41		
	0		3	4	51	6			D	TO GRP02, ELM32 (AUDIO BASIS B.)	P51		
	S		3	4	51	8			D	TO GRP02, ELM32 (AUDIO BASIS B.)	P51		
	0		3	4	51	10			D	TO GRP02, ELM32 (AUDIO BASIS B.)	P51		
	S		3	4	51	12			D	TO GRP02, ELM32 (AUDIO BASIS B.)	P51		
	0		3	4	61	6			D	TO GRP02, ELM37 (AUDIO BASIS B.)	P61		
	S		3	4	61	8			D	TO GRP02, ELM37 (AUDIO BASIS B.)	P61		
	0		3	4	61	10			D	TO GRP02, ELM37 (AUDIO BASIS B.)	P61		
	S		3	4	61	12			D	TO GRP02, ELM37 (AUDIO BASIS B.)	P61		
	0		3	4	71	6			D	TO GRP02, ELM42 (AUDIO BASIS B.)	P71		
	S		3	4	71	8			D	TO GRP02, ELM42 (AUDIO BASIS B.)	P71		
	0		3	4	71	10			D	TO GRP02, ELM42 (AUDIO BASIS B.)	P71		
	S		3	4	71	12			D	TO GRP02, ELM42 (AUDIO BASIS B.)	P71		
	0		3	4	81	6			D	TO GRP02, ELM47 (AUDIO BASIS B.)	P81		
	S		3	4	81	8			D	TO GRP02, ELM47 (AUDIO BASIS B.)	P81		
	0		3	4	81	10			D	TO GRP02, ELM47 (AUDIO BASIS B.)	P81		
	S		3	4	81	12			D	TO GRP02, ELM47 (AUDIO BASIS B.)	P81		
			3	11	1	1				LINE INPUT, CH 1	XLR J01		
			3	11	2	1				LINE INPUT, CH 2	XLR J02		
			3	11	3	1				LINE INPUT, CH 3	XLR J03		
			3	11	4	1				LINE INPUT, CH 4	XLR J04		
			3	11	5	1				LINE INPUT, CH 5	XLR J05		
			3	11	6	1				LINE INPUT, CH 6	XLR J06		
			3	11	7	1				LINE INPUT, CH 7	XLR J07		
			3	11	8	1				LINE INPUT, CH 8	XLR J08		
			3	11	9	2				LINE INPUTS, CH 1 TO 8	P01		
			3	11	9	5				LINE INPUTS, CH 1 TO 8	P01		
			3	11	9	8				LINE INPUTS, CH 1 TO 8	P01		
			3	11	9	11				LINE INPUTS, CH 1 TO 8	P01		
			3	11	9	13				LINE INPUTS, CH 1 TO 8	P01		
			3	11	9	15				LINE INPUTS, CH 1 TO 8	P01		
			3	11	9	18				LINE INPUTS, CH 1 TO 8	P01		
			3	11	9	21				LINE INPUTS, CH 1 TO 8	P01		
			3	11	9	24				LINE INPUTS, CH 1 TO 8	P01		
			3	14	1	1				LINE OUTPUT, CH 1	XLR P01		
			3	14	2	1				LINE OUTPUT, CH 2	XLR P02		
			3	14	3	1				LINE OUTPUT, CH 3	XLR P03		
			3	14	4	1				LINE OUTPUT, CH 4	XLR P04		
			3	14	5	1				LINE OUTPUT, CH 5	XLR P05		

```
*    WILLI STUDER AG    *    S I G N A L     W I R E     L I S T                    * 89/07/20  *   9:25  *   P A G E  23    *
*                                * TAPE TRANSPORT & AUDIO MCH *                     * 89/04/19 - 00                          *
```

SIGNAL NAME	COLOR	MI	ASY	GRP	ELM	PNT	S	LV	TYPE	DESCRIPTION OF ELEMENT	REMARK	ELEMENT NR.
<<-- CONT.OF			3	14	6	1				LINE OUTPUT, CH 6 XLR	P06	
+ 0.0			3	14	7	1				LINE OUTPUT, CH 7 XLR	P07	
			3	14	8	1				LINE OUTPUT, CH 8 XLR	P08	
			3	14	9	2				LINE OUTPUTS, CH 1 TO 8	P09	
			3	14	9	5				LINE OUTPUTS, CH 1 TO 8	P09	
			3	14	9	8				LINE OUTPUTS, CH 1 TO 8	P09	
			3	14	9	11				LINE OUTPUTS, CH 1 TO 8	P09	
			3	14	9	13				LINE OUTPUTS, CH 1 TO 8	P09	
			3	14	9	15				LINE OUTPUTS, CH 1 TO 8	P09	
			3	14	9	18				LINE OUTPUTS, CH 1 TO 8	P09	
			3	14	9	21				LINE OUTPUTS, CH 1 TO 8	P09	
			3	14	9	24				LINE OUTPUTS, CH 1 TO 8	P09	
			4	1	1	2				LINE AMPLIFIER, CH 9	J01	1.820.715.00
			4	1	1	5				LINE AMPLIFIER, CH 9	J01	1.820.715.00
			4	1	1	9				LINE AMPLIFIER, CH 9	J01	1.820.715.00
			4	1	1	13				LINE AMPLIFIER, CH 9	J01	1.820.715.00
			4	1	1	21				LINE AMPLIFIER, CH 9	J01	1.820.715.00
			4	1	2	1B				CONTROLLER INTERNAL NRS CH 9	J02	1.820.815.00
			4	1	2	2A				CONTROLLER INTERNAL NRS CH 9	J02	1.820.815.00
			4	1	2	3A				CONTROLLER INTERNAL NRS CH 9	J02	1.820.815.00
			4	1	2	3B				CONTROLLER INTERNAL NRS CH 9	J02	1.820.815.00
			4	1	2	4B				CONTROLLER INTERNAL NRS CH 9	J02	1.820.815.00
			4	1	2	5A				CONTROLLER INTERNAL NRS CH 9	J02	1.820.815.00
			4	1	2	6A				CONTROLLER INTERNAL NRS CH 9	J02	1.820.815.00
			4	1	2	6B				CONTROLLER INTERNAL NRS CH 9	J02	1.820.815.00
			4	1	2	9A				CONTROLLER INTERNAL NRS CH 9	J02	1.820.815.00
			4	1	2	9B				CONTROLLER INTERNAL NRS CH 9	J02	1.820.815.00
			4	1	2	13A				CONTROLLER INTERNAL NRS CH 9	J02	1.820.815.00
			4	1	2	13B				CONTROLLER INTERNAL NRS CH 9	J02	1.820.815.00
			4	1	2	17A				CONTROLLER INTERNAL NRS CH 9	J02	1.820.815.00
			4	1	2	17B				CONTROLLER INTERNAL NRS CH 9	J02	1.820.815.00
			4	1	2	20B				CONTROLLER INTERNAL NRS CH 9	J02	1.820.815.00
			4	1	2	23A				CONTROLLER INTERNAL NRS CH 9	J02	1.820.815.00
			4	1	2	31A				CONTROLLER INTERNAL NRS CH 9	J02	1.820.815.00
			4	1	2	31B				CONTROLLER INTERNAL NRS CH 9	J02	1.820.815.00
			4	1	2	32B				CONTROLLER INTERNAL NRS CH 9	J02	1.820.815.00
			4	1	3	5				REPRODUCE AMPLIFIER, CH 9	J03	1.820.710.00
			4	1	3	8				REPRODUCE AMPLIFIER, CH 9	J03	1.820.710.00
			4	1	3	11				REPRODUCE AMPLIFIER, CH 9	J03	1.820.710.00
			4	1	3	14				REPRODUCE AMPLIFIER, CH 9	J03	1.820.710.00
			4	1	3	18				REPRODUCE AMPLIFIER, CH 9	J03	1.820.710.00
			4	1	3	21				REPRODUCE AMPLIFIER, CH 9	J03	1.820.710.00
			4	1	4	5				RECORD AMPLIFIER, CH 9	J04	1.820.811.00
			4	1	4	11				RECORD AMPLIFIER, CH 9	J04	1.820.811.00
			4	1	4	14				RECORD AMPLIFIER, CH 9	J04	1.820.811.00
			4	1	4	16				RECORD AMPLIFIER, CH 9	J04	1.820.811.00
			4	1	4	21				RECORD AMPLIFIER, CH 9	J04	1.820.811.00
			4	1	5	3				HF-DRIVER, CH 9	J05	1.820.813.00
			4	1	5	4				HF-DRIVER, CH 9	J05	1.820.813.00
			4	1	5	11				HF-DRIVER, CH 9	J05	1.820.813.00
			4	1	5	16				HF-DRIVER, CH 9	J05	1.820.813.00
			4	1	5	21				HF-DRIVER, CH 9	J05	1.820.813.00
			4	1	6	2				LINE AMPLIFIER, CH10	J06	1.820.715.00
			4	1	6	5				LINE AMPLIFIER, CH10	J06	1.820.715.00

```
*    WILLI STUDER AG    *    S I G N A L     W I R E     L I S T                    * 89/07/20  *   9:25  *   P A G E  24    *
*                                * TAPE TRANSPORT & AUDIO MCH *                     * 89/04/19 - 00                          *
```

SIGNAL NAME	COLOR	MI	ASY	GRP	ELM	PNT	S	LV	TYPE	DESCRIPTION OF ELEMENT	REMARK	ELEMENT NR.
<<-- CONT.OF			4	1	6	9				LINE AMPLIFIER, CH10	J06	1.820.715.00
+ 0.0			4	1	6	13				LINE AMPLIFIER, CH10	J06	1.820.715.00
			4	1	6	21				LINE AMPLIFIER, CH10	J06	1.820.715.00
			4	1	7	1B				CONTROLLER INTERNAL NRS CH10	J07	1.820.815.00
			4	1	7	2A				CONTROLLER INTERNAL NRS CH10	J07	1.820.815.00
			4	1	7	3A				CONTROLLER INTERNAL NRS CH10	J07	1.820.815.00
			4	1	7	3B				CONTROLLER INTERNAL NRS CH10	J07	1.820.815.00
			4	1	7	4B				CONTROLLER INTERNAL NRS CH10	J07	1.820.815.00
			4	1	7	5A				CONTROLLER INTERNAL NRS CH10	J07	1.820.815.00
			4	1	7	6A				CONTROLLER INTERNAL NRS CH10	J07	1.820.815.00
			4	1	7	6B				CONTROLLER INTERNAL NRS CH10	J07	1.820.815.00
			4	1	7	9A				CONTROLLER INTERNAL NRS CH10	J07	1.820.815.00
			4	1	7	9B				CONTROLLER INTERNAL NRS CH10	J07	1.820.815.00
			4	1	7	13A				CONTROLLER INTERNAL NRS CH10	J07	1.820.815.00
			4	1	7	13B				CONTROLLER INTERNAL NRS CH10	J07	1.820.815.00
			4	1	7	17A				CONTROLLER INTERNAL NRS CH10	J07	1.820.815.00
			4	1	7	17B				CONTROLLER INTERNAL NRS CH10	J07	1.820.815.00
			4	1	7	20B				CONTROLLER INTERNAL NRS CH10	J07	1.820.815.00
			4	1	7	23A				CONTROLLER INTERNAL NRS CH10	J07	1.820.815.00
			4	1	7	31A				CONTROLLER INTERNAL NRS CH10	J07	1.820.815.00
			4	1	7	31B				CONTROLLER INTERNAL NRS CH10	J07	1.820.815.00
			4	1	7	32B				CONTROLLER INTERNAL NRS CH10	J07	1.820.815.00
			4	1	8	5				REPRODUCE AMPLIFIER, CH10	J08	1.820.710.00
			4	1	8	8				REPRODUCE AMPLIFIER, CH10	J08	1.820.710.00
			4	1	8	11				REPRODUCE AMPLIFIER, CH10	J08	1.820.710.00
			4	1	8	14				REPRODUCE AMPLIFIER, CH10	J08	1.820.710.00
			4	1	8	18				REPRODUCE AMPLIFIER, CH10	J08	1.820.710.00
			4	1	8	21				REPRODUCE AMPLIFIER, CH10	J08	1.820.710.00
			4	1	9	5				RECORD AMPLIFIER, CH10	J09	1.820.811.00
			4	1	9	11				RECORD AMPLIFIER, CH10	J09	1.820.811.00
			4	1	9	14				RECORD AMPLIFIER, CH10	J09	1.820.811.00
			4	1	9	16				RECORD AMPLIFIER, CH10	J09	1.820.811.00
			4	1	9	21				RECORD AMPLIFIER, CH10	J09	1.820.811.00
			4	1	10	3				HF-DRIVER, CH10	J10	1.820.813.00
			4	1	10	4				HF-DRIVER, CH10	J10	1.820.813.00
			4	1	10	11				HF-DRIVER, CH10	J10	1.820.813.00
			4	1	10	16				HF-DRIVER, CH10	J10	1.820.813.00
			4	1	10	21				HF-DRIVER, CH10	J10	1.820.813.00
			4	1	11	2				LINE AMPLIFIER, CH11	J11	1.820.715.00
			4	1	11	5				LINE AMPLIFIER, CH11	J11	1.820.715.00
			4	1	11	9				LINE AMPLIFIER, CH11	J11	1.820.715.00
			4	1	11	13				LINE AMPLIFIER, CH11	J11	1.820.715.00
			4	1	11	21				LINE AMPLIFIER, CH11	J11	1.820.715.00
			4	1	12	1B				CONTROLLER INTERNAL NRS CH11	J12	1.820.815.00
			4	1	12	2A				CONTROLLER INTERNAL NRS CH11	J12	1.820.815.00
			4	1	12	3A				CONTROLLER INTERNAL NRS CH11	J12	1.820.815.00
			4	1	12	3B				CONTROLLER INTERNAL NRS CH11	J12	1.820.815.00
			4	1	12	4B				CONTROLLER INTERNAL NRS CH11	J12	1.820.815.00
			4	1	12	5A				CONTROLLER INTERNAL NRS CH11	J12	1.820.815.00
			4	1	12	6A				CONTROLLER INTERNAL NRS CH11	J12	1.820.815.00
			4	1	12	6B				CONTROLLER INTERNAL NRS CH11	J12	1.820.815.00
			4	1	12	9A				CONTROLLER INTERNAL NRS CH11	J12	1.820.815.00
			4	1	12	9B				CONTROLLER INTERNAL NRS CH11	J12	1.820.815.00
			4	1	12	13A				CONTROLLER INTERNAL NRS CH11	J12	1.820.815.00

WILLI STUDER AG	SIGNAL WIRE LIST	89/07/20	9:25	PAGE 25
	* TAPE TRANSPORT & AUDIO MCH *	89/04/19 - 00		

SIGNAL NAME	COLOR	MI	ASY	GRP	ELM	PNT	S	LV	TYPE	DESCRIPTION OF ELEMENT		REMARK	ELEMENT NR.
<<-- CONT.OF			4	1	12	13B				CONTROLLER INTERNAL NRS CH11	J12		1.820.815.00
+ 0.0			4	1	12	17A				CONTROLLER INTERNAL NRS CH11	J12		1.820.815.00
			4	1	12	17B				CONTROLLER INTERNAL NRS CH11	J12		1.820.815.00
			4	1	12	20B				CONTROLLER INTERNAL NRS CH11	J12		1.820.815.00
			4	1	12	23A				CONTROLLER INTERNAL NRS CH11	J12		1.820.815.00
			4	1	12	31A				CONTROLLER INTERNAL NRS CH11	J12		1.820.815.00
			4	1	12	31B				CONTROLLER INTERNAL NRS CH11	J12		1.820.815.00
			4	1	12	32B				CONTROLLER INTERNAL NRS CH11	J12		1.820.815.00
			4	1	13	5				REPRODUCE AMPLIFIER, CH11	J13		1.820.710.00
			4	1	13	8				REPRODUCE AMPLIFIER, CH11	J13		1.820.710.00
			4	1	13	11				REPRODUCE AMPLIFIER, CH11	J13		1.820.710.00
			4	1	13	14				REPRODUCE AMPLIFIER, CH11	J13		1.820.710.00
			4	1	13	18				REPRODUCE AMPLIFIER, CH11	J13		1.820.710.00
			4	1	13	21				REPRODUCE AMPLIFIER, CH11	J13		1.820.710.00
			4	1	14	5				RECORD AMPLIFIER, CH11	J14		1.820.811.00
			4	1	14	11				RECORD AMPLIFIER, CH11	J14		1.820.811.00
			4	1	14	14				RECORD AMPLIFIER, CH11	J14		1.820.811.00
			4	1	14	16				RECORD AMPLIFIER, CH11	J14		1.820.811.00
			4	1	14	21				RECORD AMPLIFIER, CH11	J14		1.820.811.00
			4	1	15	3				HF-DRIVER, CH11	J15		1.820.813.00
			4	1	15	4				HF-DRIVER, CH11	J15		1.820.813.00
			4	1	15	11				HF-DRIVER, CH11	J15		1.820.813.00
			4	1	15	16				HF-DRIVER, CH11	J15		1.820.813.00
			4	1	15	21				HF-DRIVER, CH11	J15		1.820.813.00
			4	1	16	2				LINE AMPLIFIER, CH12	J16		1.820.715.00
			4	1	16	5				LINE AMPLIFIER, CH12	J16		1.820.715.00
			4	1	16	9				LINE AMPLIFIER, CH12	J16		1.820.715.00
			4	1	16	13				LINE AMPLIFIER, CH12	J16		1.820.715.00
			4	1	16	21				LINE AMPLIFIER, CH12	J16		1.820.715.00
			4	1	17	1B				CONTROLLER INTERNAL NRS CH12	J17		1.820.815.00
			4	1	17	2A				CONTROLLER INTERNAL NRS CH12	J17		1.820.815.00
			4	1	17	3A				CONTROLLER INTERNAL NRS CH12	J17		1.820.815.00
			4	1	17	3B				CONTROLLER INTERNAL NRS CH12	J17		1.820.815.00
			4	1	17	4B				CONTROLLER INTERNAL NRS CH12	J17		1.820.815.00
			4	1	17	5A				CONTROLLER INTERNAL NRS CH12	J17		1.820.815.00
			4	1	17	6A				CONTROLLER INTERNAL NRS CH12	J17		1.820.815.00
			4	1	17	6B				CONTROLLER INTERNAL NRS CH12	J17		1.820.815.00
			4	1	17	9A				CONTROLLER INTERNAL NRS CH12	J17		1.820.815.00
			4	1	17	9B				CONTROLLER INTERNAL NRS CH12	J17		1.820.815.00
			4	1	17	13A				CONTROLLER INTERNAL NRS CH12	J17		1.820.815.00
			4	1	17	13B				CONTROLLER INTERNAL NRS CH12	J17		1.820.815.00
			4	1	17	17A				CONTROLLER INTERNAL NRS CH12	J17		1.820.815.00
			4	1	17	17B				CONTROLLER INTERNAL NRS CH12	J17		1.820.815.00
			4	1	17	20B				CONTROLLER INTERNAL NRS CH12	J17		1.820.815.00
			4	1	17	23A				CONTROLLER INTERNAL NRS CH12	J17		1.820.815.00
			4	1	17	31A				CONTROLLER INTERNAL NRS CH12	J17		1.820.815.00
			4	1	17	31B				CONTROLLER INTERNAL NRS CH12	J17		1.820.815.00
			4	1	17	32B				CONTROLLER INTERNAL NRS CH12	J17		1.820.815.00
			4	1	18	5				REPRODUCE AMPLIFIER, CH12	J18		1.820.710.00
			4	1	18	8				REPRODUCE AMPLIFIER, CH12	J18		1.820.710.00
			4	1	18	11				REPRODUCE AMPLIFIER, CH12	J18		1.820.710.00
			4	1	18	14				REPRODUCE AMPLIFIER, CH12	J18		1.820.710.00
			4	1	18	18				REPRODUCE AMPLIFIER, CH12	J18		1.820.710.00
			4	1	18	21				REPRODUCE AMPLIFIER, CH12	J18		1.820.710.00

WILLI STUDER AG	SIGNAL WIRE LIST	89/07/20	9:25	PAGE 26
	* TAPE TRANSPORT & AUDIO MCH *	89/04/19 - 00		

SIGNAL NAME	COLOR	MI	ASY	GRP	ELM	PNT	S	LV	TYPE	DESCRIPTION OF ELEMENT		REMARK	ELEMENT NR.
<<-- CONT.OF			4	1	19	5				RECORD AMPLIFIER, CH12	J19		1.820.811.00
+ 0.0			4	1	19	11				RECORD AMPLIFIER, CH12	J19		1.820.811.00
			4	1	19	14				RECORD AMPLIFIER, CH12	J19		1.820.811.00
			4	1	19	16				RECORD AMPLIFIER, CH12	J19		1.820.811.00
			4	1	19	21				RECORD AMPLIFIER, CH12	J19		1.820.811.00
			4	1	20	3				HF-DRIVER, CH12	J20		1.820.813.00
			4	1	20	4				HF-DRIVER, CH12	J20		1.820.813.00
			4	1	20	11				HF-DRIVER, CH12	J20		1.820.813.00
			4	1	20	16				HF-DRIVER, CH12	J20		1.820.813.00
			4	1	20	21				HF-DRIVER, CH12	J20		1.820.813.00
			4	1	21	17A				BUS CONVERTER	J21		1.820.717.00
			4	1	21	17B				BUS CONVERTER	J21		1.820.717.00
			4	1	21	27A				BUS CONVERTER	J21		1.820.717.00
			4	1	21	27B				BUS CONVERTER	J21		1.820.717.00
			4	1	21	30A				BUS CONVERTER	J21		1.820.717.00
			4	1	21	30B				BUS CONVERTER	J21		1.820.717.00
			4	1	31	4				LINE INPUT/OUTPUT, CH 9	J22		
			4	1	31	7				LINE INPUT/OUTPUT, CH 9	J22		
			4	1	32	6				NOISE REDUCTION, CH 9	J23		
			4	1	32	8				NOISE REDUCTION, CH 9	J23		
			4	1	32	10				NOISE REDUCTION, CH 9	J23		
			4	1	32	12				NOISE REDUCTION, CH 9	J23		
			4	1	33	4				REPRODUCE PREAMPLIFIER, CH 9	J24		
			4	1	34	4				RECORD HEAD, CH 9	J25		
			4	1	36	4				LINE INPUT/OUTPUT, CH10	J27		
			4	1	36	7				LINE INPUT/OUTPUT, CH10	J27		
			4	1	37	6				NOISE REDUCTION, CH10	J28		
			4	1	37	8				NOISE REDUCTION, CH10	J28		
			4	1	37	10				NOISE REDUCTION, CH10	J28		
			4	1	37	12				NOISE REDUCTION, CH10	J28		
			4	1	38	4				REPRODUCE PREAMPLIFIER, CH10	J29		
			4	1	39	4				RECORD HEAD, CH10	J30		
			4	1	41	4				LINE INPUT/OUTPUT, CH11	J32		
			4	1	41	7				LINE INPUT/OUTPUT, CH11	J32		
			4	1	42	6				NOISE REDUCTION, CH11	J33		
			4	1	42	8				NOISE REDUCTION, CH11	J33		
			4	1	42	10				NOISE REDUCTION, CH11	J33		
			4	1	42	12				NOISE REDUCTION, CH11	J33		
			4	1	43	4				REPRODUCE PREAMPLIFIER, CH11	J34		
			4	1	44	4				RECORD HEAD, CH11	J35		
			4	1	46	4				LINE INPUT/OUTPUT, CH12	J37		
			4	1	46	7				LINE INPUT/OUTPUT, CH12	J37		
			4	1	47	6				NOISE REDUCTION, CH12	J38		
			4	1	47	8				NOISE REDUCTION, CH12	J38		
			4	1	47	10				NOISE REDUCTION, CH12	J38		
			4	1	47	12				NOISE REDUCTION, CH12	J38		
			4	1	48	4				REPRODUCE PREAMPLIFIER, CH12	J39		
			4	1	49	4				RECORD HEAD, CH12	J40		
			4	1	70	1					P01		
			4	1	70	2					P01		
			4	1	70	10					P01		
			4	1	70	13					P01		
			4	1	70	16					P01		
			4	1	70	19					P01		

```
*    WILLI STUDER AG    *    S I G N A L     W I R E     L I S T              * 89/07/20  *   9:25  *   P A G E  27   *
*                        * TAPE TRANSPORT & AUDIO MCH *                       * 89/04/19 - 00                          *
```

SIGNAL NAME	COLOR	MI	ASY	GRP	ELM	PNT	S	LV	TYPE	DESCRIPTION OF ELEMENT	REMARK	ELEMENT NR.
<<-- CONT.OF			4	1	70	22					P01	
+ 0.0			4	1	70	24					P01	
			4	1	70	26					P01	
			4	1	70	28					P01	
			4	1	70	30					P01	
			4	1	70	32					P01	
			4	1	70	34					P01	
			4	1	70	36					P01	
			4	1	70	38					P01	
			4	1	70	40					P01	
			4	2	1	2				LINE AMPLIFIER, CH13	J01	1.820.715.00
			4	2	1	5				LINE AMPLIFIER, CH13	J01	1.820.715.00
			4	2	1	9				LINE AMPLIFIER, CH13	J01	1.820.715.00
			4	2	1	13				LINE AMPLIFIER, CH13	J01	1.820.715.00
			4	2	1	21				LINE AMPLIFIER, CH13	J01	1.820.715.00
			4	2	2	1B				CONTROLLER INTERNAL NRS CH13	J02	1.820.815.00
			4	2	2	2A				CONTROLLER INTERNAL NRS CH13	J02	1.820.815.00
			4	2	2	3A				CONTROLLER INTERNAL NRS CH13	J02	1.820.815.00
			4	2	2	3B				CONTROLLER INTERNAL NRS CH13	J02	1.820.815.00
			4	2	2	4B				CONTROLLER INTERNAL NRS CH13	J02	1.820.815.00
			4	2	2	5A				CONTROLLER INTERNAL NRS CH13	J02	1.820.815.00
			4	2	2	6A				CONTROLLER INTERNAL NRS CH13	J02	1.820.815.00
			4	2	2	6B				CONTROLLER INTERNAL NRS CH13	J02	1.820.815.00
			4	2	2	9A				CONTROLLER INTERNAL NRS CH13	J02	1.820.815.00
			4	2	2	9B				CONTROLLER INTERNAL NRS CH13	J02	1.820.815.00
			4	2	2	13A				CONTROLLER INTERNAL NRS CH13	J02	1.820.815.00
			4	2	2	13B				CONTROLLER INTERNAL NRS CH13	J02	1.820.815.00
			4	2	2	17A				CONTROLLER INTERNAL NRS CH13	J02	1.820.815.00
			4	2	2	17B				CONTROLLER INTERNAL NRS CH13	J02	1.820.815.00
			4	2	2	20B				CONTROLLER INTERNAL NRS CH13	J02	1.820.815.00
			4	2	2	23A				CONTROLLER INTERNAL NRS CH13	J02	1.820.815.00
			4	2	2	31A				CONTROLLER INTERNAL NRS CH13	J02	1.820.815.00
			4	2	2	31B				CONTROLLER INTERNAL NRS CH13	J02	1.820.815.00
			4	2	2	32B				CONTROLLER INTERNAL NRS CH13	J02	1.820.815.00
			4	2	3	5				REPRODUCE AMPLIFIER, CH13	J03	1.820.710.00
			4	2	3	8				REPRODUCE AMPLIFIER, CH13	J03	1.820.710.00
			4	2	3	11				REPRODUCE AMPLIFIER, CH13	J03	1.820.710.00
			4	2	3	14				REPRODUCE AMPLIFIER, CH13	J03	1.820.710.00
			4	2	3	18				REPRODUCE AMPLIFIER, CH13	J03	1.820.710.00
			4	2	3	21				REPRODUCE AMPLIFIER, CH13	J03	1.820.710.00
			4	2	4	5				RECORD AMPLIFIER, CH13	J04	1.820.811.00
			4	2	4	11				RECORD AMPLIFIER, CH13	J04	1.820.811.00
			4	2	4	14				RECORD AMPLIFIER, CH13	J04	1.820.811.00
			4	2	4	16				RECORD AMPLIFIER, CH13	J04	1.820.811.00
			4	2	4	21				RECORD AMPLIFIER, CH13	J04	1.820.811.00
			4	2	5	3				HF-DRIVER, CH13	J05	1.820.813.00
			4	2	5	4				HF-DRIVER, CH13	J05	1.820.813.00
			4	2	5	11				HF-DRIVER, CH13	J05	1.820.813.00
			4	2	5	16				HF-DRIVER, CH13	J05	1.820.813.00
			4	2	5	21				HF-DRIVER, CH13	J05	1.820.813.00
			4	2	6	2				LINE AMPLIFIER, CH14	J06	1.820.715.00
			4	2	6	5				LINE AMPLIFIER, CH14	J06	1.820.715.00
			4	2	6	9				LINE AMPLIFIER, CH14	J06	1.820.715.00
			4	2	6	13				LINE AMPLIFIER, CH14	J06	1.820.715.00

```
*    WILLI STUDER AG    *    S I G N A L     W I R E     L I S T              * 89/07/20  *   9:25  *   P A G E  28   *
*                        * TAPE TRANSPORT & AUDIO MCH *                       * 89/04/19 - 00                          *
```

SIGNAL NAME	COLOR	MI	ASY	GRP	ELM	PNT	S	LV	TYPE	DESCRIPTION OF ELEMENT	REMARK	ELEMENT NR.
<<-- CONT.OF			4	2	6	21				LINE AMPLIFIER, CH14	J06	1.820.715.00
+ 0.0			4	2	7	1B				CONTROLLER INTERNAL NRS CH14	J07	1.820.815.00
			4	2	7	2A				CONTROLLER INTERNAL NRS CH14	J07	1.820.815.00
			4	2	7	3A				CONTROLLER INTERNAL NRS CH14	J07	1.820.815.00
			4	2	7	3B				CONTROLLER INTERNAL NRS CH14	J07	1.820.815.00
			4	2	7	4B				CONTROLLER INTERNAL NRS CH14	J07	1.820.815.00
			4	2	7	5A				CONTROLLER INTERNAL NRS CH14	J07	1.820.815.00
			4	2	7	6A				CONTROLLER INTERNAL NRS CH14	J07	1.820.815.00
			4	2	7	6B				CONTROLLER INTERNAL NRS CH14	J07	1.820.815.00
			4	2	7	9A				CONTROLLER INTERNAL NRS CH14	J07	1.820.815.00
			4	2	7	9B				CONTROLLER INTERNAL NRS CH14	J07	1.820.815.00
			4	2	7	13A				CONTROLLER INTERNAL NRS CH14	J07	1.820.815.00
			4	2	7	13B				CONTROLLER INTERNAL NRS CH14	J07	1.820.815.00
			4	2	7	17A				CONTROLLER INTERNAL NRS CH14	J07	1.820.815.00
			4	2	7	17B				CONTROLLER INTERNAL NRS CH14	J07	1.820.815.00
			4	2	7	20B				CONTROLLER INTERNAL NRS CH14	J07	1.820.815.00
			4	2	7	23A				CONTROLLER INTERNAL NRS CH14	J07	1.820.815.00
			4	2	7	31A				CONTROLLER INTERNAL NRS CH14	J07	1.820.815.00
			4	2	7	31B				CONTROLLER INTERNAL NRS CH14	J07	1.820.815.00
			4	2	7	32B				CONTROLLER INTERNAL NRS CH14	J07	1.820.815.00
			4	2	8	5				REPRODUCE AMPLIFIER, CH14	J08	1.820.710.00
			4	2	8	8				REPRODUCE AMPLIFIER, CH14	J08	1.820.710.00
			4	2	8	11				REPRODUCE AMPLIFIER, CH14	J08	1.820.710.00
			4	2	8	14				REPRODUCE AMPLIFIER, CH14	J08	1.820.710.00
			4	2	8	18				REPRODUCE AMPLIFIER, CH14	J08	1.820.710.00
			4	2	8	21				REPRODUCE AMPLIFIER, CH14	J08	1.820.710.00
			4	2	9	5				RECORD AMPLIFIER, CH14	J09	1.820.811.00
			4	2	9	11				RECORD AMPLIFIER, CH14	J09	1.820.811.00
			4	2	9	14				RECORD AMPLIFIER, CH14	J09	1.820.811.00
			4	2	9	16				RECORD AMPLIFIER, CH14	J09	1.820.811.00
			4	2	9	21				RECORD AMPLIFIER, CH14	J09	1.820.811.00
			4	2	10	3				HF-DRIVER, CH14	J10	1.820.813.00
			4	2	10	4				HF-DRIVER, CH14	J10	1.820.813.00
			4	2	10	11				HF-DRIVER, CH14	J10	1.820.813.00
			4	2	10	16				HF-DRIVER, CH14	J10	1.820.813.00
			4	2	10	21				HF-DRIVER, CH14	J10	1.820.813.00
			4	2	11	2				LINE AMPLIFIER, CH15	J11	1.820.715.00
			4	2	11	5				LINE AMPLIFIER, CH15	J11	1.820.715.00
			4	2	11	9				LINE AMPLIFIER, CH15	J11	1.820.715.00
			4	2	11	13				LINE AMPLIFIER, CH15	J11	1.820.715.00
			4	2	11	21				LINE AMPLIFIER, CH15	J11	1.820.715.00
			4	2	12	1B				CONTROLLER INTERNAL NRS CH15	J12	1.820.815.00
			4	2	12	2A				CONTROLLER INTERNAL NRS CH15	J12	1.820.815.00
			4	2	12	3A				CONTROLLER INTERNAL NRS CH15	J12	1.820.815.00
			4	2	12	3B				CONTROLLER INTERNAL NRS CH15	J12	1.820.815.00
			4	2	12	4B				CONTROLLER INTERNAL NRS CH15	J12	1.820.815.00
			4	2	12	5A				CONTROLLER INTERNAL NRS CH15	J12	1.820.815.00
			4	2	12	6A				CONTROLLER INTERNAL NRS CH15	J12	1.820.815.00
			4	2	12	6B				CONTROLLER INTERNAL NRS CH15	J12	1.820.815.00
			4	2	12	9A				CONTROLLER INTERNAL NRS CH15	J12	1.820.815.00
			4	2	12	9B				CONTROLLER INTERNAL NRS CH15	J12	1.820.815.00
			4	2	12	13A				CONTROLLER INTERNAL NRS CH15	J12	1.820.815.00
			4	2	12	13B				CONTROLLER INTERNAL NRS CH15	J12	1.820.815.00
			4	2	12	17A				CONTROLLER INTERNAL NRS CH15	J12	1.820.815.00

* WILLI STUDER AG *	S I G N A L	W I R E	L I S T	* 89/07/20 *	9:25 *	P A G E 29 *
*	* TAPE TRANSPORT & AUDIO MCH *			* 89/04/19 - 00		*

SIGNAL NAME	COLOR	MI	ASY	GRP	ELM	PNT	S	LV	TYPE	DESCRIPTION OF ELEMENT		REMARK	ELEMENT NR.
<<-- CONT.OF			4	2	12	17B				CONTROLLER INTERNAL NRS CH15	J12		1.820.815.00
+ 0.0			4	2	12	20B				CONTROLLER INTERNAL NRS CH15	J12		1.820.815.00
			4	2	12	23A				CONTROLLER INTERNAL NRS CH15	J12		1.820.815.00
			4	2	12	31A				CONTROLLER INTERNAL NRS CH15	J12		1.820.815.00
			4	2	12	31B				CONTROLLER INTERNAL NRS CH15	J12		1.820.815.00
			4	2	12	32B				CONTROLLER INTERNAL NRS CH15	J12		1.820.815.00
			4	2	13	5				REPRODUCE AMPLIFIER, CH15	J13		1.820.710.00
			4	2	13	8				REPRODUCE AMPLIFIER, CH15	J13		1.820.710.00
			4	2	13	11				REPRODUCE AMPLIFIER, CH15	J13		1.820.710.00
			4	2	13	14				REPRODUCE AMPLIFIER, CH15	J13		1.820.710.00
			4	2	13	18				REPRODUCE AMPLIFIER, CH15	J13		1.820.710.00
			4	2	13	21				REPRODUCE AMPLIFIER, CH15	J13		1.820.710.00
			4	2	14	5				RECORD AMPLIFIER, CH15	J14		1.820.811.00
			4	2	14	11				RECORD AMPLIFIER, CH15	J14		1.820.811.00
			4	2	14	14				RECORD AMPLIFIER, CH15	J14		1.820.811.00
			4	2	14	16				RECORD AMPLIFIER, CH15	J14		1.820.811.00
			4	2	14	21				RECORD AMPLIFIER, CH15	J14		1.820.811.00
			4	2	15	3				HF-DRIVER, CH15	J15		1.820.813.00
			4	2	15	4				HF-DRIVER, CH15	J15		1.820.813.00
			4	2	15	11				HF-DRIVER, CH15	J15		1.820.813.00
			4	2	15	16				HF-DRIVER, CH15	J15		1.820.813.00
			4	2	15	21				HF-DRIVER, CH15	J15		1.820.813.00
			4	2	16	2				LINE AMPLIFIER, CH16	J16		1.820.715.00
			4	2	16	5				LINE AMPLIFIER, CH16	J16		1.820.715.00
			4	2	16	9				LINE AMPLIFIER, CH16	J16		1.820.715.00
			4	2	16	13				LINE AMPLIFIER, CH16	J16		1.820.715.00
			4	2	16	21				LINE AMPLIFIER, CH16	J16		1.820.715.00
			4	2	17	1B				CONTROLLER INTERNAL NRS CH16	J17		1.820.815.00
			4	2	17	2A				CONTROLLER INTERNAL NRS CH16	J17		1.820.815.00
			4	2	17	3A				CONTROLLER INTERNAL NRS CH16	J17		1.820.815.00
			4	2	17	3B				CONTROLLER INTERNAL NRS CH16	J17		1.820.815.00
			4	2	17	4B				CONTROLLER INTERNAL NRS CH16	J17		1.820.815.00
			4	2	17	5A				CONTROLLER INTERNAL NRS CH16	J17		1.820.815.00
			4	2	17	6A				CONTROLLER INTERNAL NRS CH16	J17		1.820.815.00
			4	2	17	6B				CONTROLLER INTERNAL NRS CH16	J17		1.820.815.00
			4	2	17	9A				CONTROLLER INTERNAL NRS CH16	J17		1.820.815.00
			4	2	17	9B				CONTROLLER INTERNAL NRS CH16	J17		1.820.815.00
			4	2	17	13A				CONTROLLER INTERNAL NRS CH16	J17		1.820.815.00
			4	2	17	13B				CONTROLLER INTERNAL NRS CH16	J17		1.820.815.00
			4	2	17	17A				CONTROLLER INTERNAL NRS CH16	J17		1.820.815.00
			4	2	17	17B				CONTROLLER INTERNAL NRS CH16	J17		1.820.815.00
			4	2	17	20B				CONTROLLER INTERNAL NRS CH16	J17		1.820.815.00
			4	2	17	23A				CONTROLLER INTERNAL NRS CH16	J17		1.820.815.00
			4	2	17	31A				CONTROLLER INTERNAL NRS CH16	J17		1.820.815.00
			4	2	17	31B				CONTROLLER INTERNAL NRS CH16	J17		1.820.815.00
			4	2	17	32B				CONTROLLER INTERNAL NRS CH16	J17		1.820.815.00
			4	2	18	5				REPRODUCE AMPLIFIER, CH16	J18		1.820.710.00
			4	2	18	8				REPRODUCE AMPLIFIER, CH16	J18		1.820.710.00
			4	2	18	11				REPRODUCE AMPLIFIER, CH16	J18		1.820.710.00
			4	2	18	14				REPRODUCE AMPLIFIER, CH16	J18		1.820.710.00
			4	2	18	18				REPRODUCE AMPLIFIER, CH16	J18		1.820.710.00
			4	2	18	21				REPRODUCE AMPLIFIER, CH16	J18		1.820.710.00
			4	2	19	5				RECORD AMPLIFIER, CH16	J19		1.820.811.00
			4	2	19	11				RECORD AMPLIFIER, CH16	J19		1.820.811.00

* WILLI STUDER AG *	S I G N A L	W I R E	L I S T	* 89/07/20 *	9:25 *	P A G E 30 *
*	* TAPE TRANSPORT & AUDIO MCH *			* 89/04/19 - 00		*

SIGNAL NAME	COLOR	MI	ASY	GRP	ELM	PNT	S	LV	TYPE	DESCRIPTION OF ELEMENT		REMARK	ELEMENT NR.
<<-- CONT.OF			4	2	19	14				RECORD AMPLIFIER, CH16	J19		1.820.811.00
+ 0.0			4	2	19	16				RECORD AMPLIFIER, CH16	J19		1.820.811.00
			4	2	19	21				RECORD AMPLIFIER, CH16	J19		1.820.811.00
			4	2	20	3				HF-DRIVER, CH16	J20		1.820.813.00
			4	2	20	4				HF-DRIVER, CH16	J20		1.820.813.00
			4	2	20	11				HF-DRIVER, CH16	J20		1.820.813.00
			4	2	20	16				HF-DRIVER, CH16	J20		1.820.813.00
			4	2	20	21				HF-DRIVER, CH16	J20		1.820.813.00
			4	2	21	17A				BUS CONVERTER	J21		1.820.717.00
			4	2	21	17B				BUS CONVERTER	J21		1.820.717.00
			4	2	21	27A				BUS CONVERTER	J21		1.820.717.00
			4	2	21	27B				BUS CONVERTER	J21		1.820.717.00
			4	2	21	30A				BUS CONVERTER	J21		1.820.717.00
			4	2	21	30B				BUS CONVERTER	J21		1.820.717.00
			4	2	31	4				LINE INPUT/OUTPUT, CH13	J22		
			4	2	31	7				LINE INPUT/OUTPUT, CH13	J22		
			4	2	32	6				NOISE REDUCTION, CH13	J23		
			4	2	32	8				NOISE REDUCTION, CH13	J23		
			4	2	32	10				NOISE REDUCTION, CH13	J23		
			4	2	32	12				NOISE REDUCTION, CH13	J23		
			4	2	33	4				REPRODUCE PREAMPLIFIER, CH13	J24		
			4	2	34	4				RECORD HEAD, CH13	J25		
			4	2	36	4				LINE INPUT/OUTPUT, CH14	J27		
			4	2	36	7				LINE INPUT/OUTPUT, CH14	J27		
			4	2	37	6				NOISE REDUCTION, CH14	J28		
			4	2	37	8				NOISE REDUCTION, CH14	J28		
			4	2	37	10				NOISE REDUCTION, CH14	J28		
			4	2	37	12				NOISE REDUCTION, CH14	J28		
			4	2	38	4				REPRODUCE PREAMPLIFIER, CH14	J29		
			4	2	39	4				RECORD HEAD, CH14	J30		
			4	2	41	4				LINE INPUT/OUTPUT, CH15	J32		
			4	2	41	7				LINE INPUT/OUTPUT, CH15	J32		
			4	2	42	6				NOISE REDUCTION, CH15	J33		
			4	2	42	8				NOISE REDUCTION, CH15	J33		
			4	2	42	10				NOISE REDUCTION, CH15	J33		
			4	2	42	12				NOISE REDUCTION, CH15	J33		
			4	2	43	4				REPRODUCE PREAMPLIFIER, CH15	J34		
			4	2	44	4				RECORD HEAD, CH15	J35		
			4	2	46	4				LINE INPUT/OUTPUT, CH16	J37		
			4	2	46	7				LINE INPUT/OUTPUT, CH16	J37		
			4	2	47	6				NOISE REDUCTION, CH16	J38		
			4	2	47	8				NOISE REDUCTION, CH16	J38		
			4	2	47	10				NOISE REDUCTION, CH16	J38		
			4	2	47	12				NOISE REDUCTION, CH16	J38		
			4	2	48	4				REPRODUCE PREAMPLIFIER, CH16	J39		
			4	2	49	4				RECORD HEAD, CH16	J40		
			4	2	70	1					P01		
			4	2	70	2					P01		
			4	2	70	10					P01		
			4	2	70	13					P01		
			4	2	70	16					P01		
			4	2	70	19					P01		
			4	2	70	22					P01		
			4	2	70	24					P01		

```
*    WILLI STUDER AG    *    S I G N A L    W I R E    L I S T                    * 89/07/20  *   9:25  *  P A G E  31   *
*                        * TAPE TRANSPORT & AUDIO MCH *                           * 89/04/19 - 00                        *
```

SIGNAL NAME	COLOR	MI	ASY	GRP	ELM	PNT	S	LV	TYPE	DESCRIPTION OF ELEMENT	REMARK	ELEMENT NR.
<<-- CONT.OF			4	2	70	26					P01	
+ 0.0			4	2	70	28					P01	
			4	2	70	30					P01	
			4	2	70	32					P01	
			4	2	70	34					P01	
			4	2	70	36					P01	
			4	2	70	38					P01	
			4	2	70	40					P01	
			4	3	1	3				SUPPLY PREAMPLIFIER CH17 TO 24	J01	
			4	3	2	3			BX	SUPPLY ASY04, GRP01	J02	
			4	3	2	4			BX	SUPPLY ASY04, GRP01	J02	
			4	3	3	3			BX	SUPPLY ASY04, GRP02	J03	
			4	3	3	4			BX	SUPPLY ASY04, GRP02	J03	
			4	3	4	3			BX	SUPPLY CONNECTOR	J04	
			4	3	4	4			BX	SUPPLY CONNECTOR	J04	
			4	3	5	3			BX	SUPPLY ASY04, GRP04 (NRS OPTION)	J05	
			4	3	5	4			BX	SUPPLY ASY04, GRP04 (NRS OPTION)	J05	
			4	4	1	16				NOISE REDUCTION UNIT CH 9	J01	
			4	4	1	16T				NOISE REDUCTION UNIT CH 9	J01	
			4	4	11	6			D	TO GRP01, ELM32 (AUDIO BASIS B.)	P01	
			4	4	11	8			D	TO GRP01, ELM32 (AUDIO BASIS B.)	P01	
			4	4	11	10			D	TO GRP01, ELM32 (AUDIO BASIS B.)	P01	
			4	4	11	12			D	TO GRP01, ELM32 (AUDIO BASIS B.)	P01	
			4	4	12	6			D	TO GRP01, ELM37 (AUDIO BASIS B.)	P02	
			4	4	12	8			D	TO GRP01, ELM37 (AUDIO BASIS B.)	P02	
			4	4	12	10			D	TO GRP01, ELM37 (AUDIO BASIS B.)	P02	
			4	4	12	12			D	TO GRP01, ELM37 (AUDIO BASIS B.)	P02	
			4	4	13	6			D	TO GRP01, ELM42 (AUDIO BASIS B.)	P03	
			4	4	13	8			D	TO GRP01, ELM42 (AUDIO BASIS B.)	P03	
			4	4	13	10			D	TO GRP01, ELM42 (AUDIO BASIS B.)	P03	
			4	4	13	12			D	TO GRP01, ELM42 (AUDIO BASIS B.)	P03	
			4	4	14	6			D	TO GRP01, ELM47 (AUDIO BASIS B.)	P04	
			4	4	14	8			D	TO GRP01, ELM47 (AUDIO BASIS B.)	P04	
			4	4	14	10			D	TO GRP01, ELM47 (AUDIO BASIS B.)	P04	
			4	4	14	12			D	TO GRP01, ELM47 (AUDIO BASIS B.)	P04	
			4	4	15	6			D	TO GRP02, ELM32 (AUDIO BASIS B.)	P05	
			4	4	15	8			D	TO GRP02, ELM32 (AUDIO BASIS B.)	P05	
			4	4	15	10			D	TO GRP02, ELM32 (AUDIO BASIS B.)	P05	
			4	4	15	12			D	TO GRP02, ELM32 (AUDIO BASIS B.)	P05	
			4	4	16	6			D	TO GRP02, ELM37 (AUDIO BASIS B.)	P06	
			4	4	16	8			D	TO GRP02, ELM37 (AUDIO BASIS B.)	P06	
			4	4	16	10			D	TO GRP02, ELM37 (AUDIO BASIS B.)	P06	
			4	4	16	12			D	TO GRP02, ELM37 (AUDIO BASIS B.)	P06	
			4	4	17	6			D	TO GRP02, ELM42 (AUDIO BASIS B.)	P07	
			4	4	17	8			D	TO GRP02, ELM42 (AUDIO BASIS B.)	P07	
			4	4	17	10			D	TO GRP02, ELM42 (AUDIO BASIS B.)	P07	
			4	4	17	12			D	TO GRP02, ELM42 (AUDIO BASIS B.)	P07	
			4	4	18	6			D	TO GRP02, ELM47 (AUDIO BASIS B.)	P08	
			4	4	18	8			D	TO GRP02, ELM47 (AUDIO BASIS B.)	P08	
			4	4	18	10			D	TO GRP02, ELM47 (AUDIO BASIS B.)	P08	
			4	4	18	12			D	TO GRP02, ELM47 (AUDIO BASIS B.)	P08	
			4	4	19	3			AX	FROM GRP03, ELM05 (DISTR. B)	P09	
			4	4	19	4			AX	FROM GRP03, ELM05 (DISTR. B)	P09	
			4	11	1	1				LINE INPUT, CH 9	XLR J01	

```
*    WILLI STUDER AG    *    S I G N A L    W I R E    L I S T                    * 89/07/20  *   9:25  *  P A G E  32   *
*                        * TAPE TRANSPORT & AUDIO MCH *                           * 89/04/19 - 00                        *
```

SIGNAL NAME	COLOR	MI	ASY	GRP	ELM	PNT	S	LV	TYPE	DESCRIPTION OF ELEMENT	REMARK	ELEMENT NR.
<<-- CONT.OF			4	11	2	1				LINE INPUT, CH10	XLR J02	
+ 0.0			4	11	3	1				LINE INPUT, CH11	XLR J03	
			4	11	4	1				LINE INPUT, CH12	XLR J04	
			4	11	5	1				LINE INPUT, CH13	XLR J05	
			4	11	6	1				LINE INPUT, CH14	XLR J06	
			4	11	7	1				LINE INPUT, CH15	XLR J07	
			4	11	8	1				LINE INPUT, CH16	XLR J08	
			4	11	9	2				LINE INPUTS, CH 9 TO 16	P01	
			4	11	9	5				LINE INPUTS, CH 9 TO 16	P01	
			4	11	9	8				LINE INPUTS, CH 9 TO 16	P01	
			4	11	9	11				LINE INPUTS, CH 9 TO 16	P01	
			4	11	9	13				LINE INPUTS, CH 9 TO 16	P01	
			4	11	9	15				LINE INPUTS, CH 9 TO 16	P01	
			4	11	9	18				LINE INPUTS, CH 9 TO 16	P01	
			4	11	9	21				LINE INPUTS, CH 9 TO 16	P01	
			4	11	9	24				LINE INPUTS, CH 9 TO 16	P01	
			4	14	1	1				LINE OUTPUT, CH 9	XLR P01	
			4	14	2	1				LINE OUTPUT, CH10	XLR P02	
			4	14	3	1				LINE OUTPUT, CH11	XLR P03	
			4	14	4	1				LINE OUTPUT, CH12	XLR P04	
			4	14	5	1				LINE OUTPUT, CH13	XLR P05	
			4	14	6	1				LINE OUTPUT, CH14	XLR P06	
			4	14	7	1				LINE OUTPUT, CH15	XLR P07	
			4	14	8	1				LINE OUTPUT, CH16	XLR P08	
			4	14	9	2				LINE OUTPUTS, CH 9 TO 16	P09	
			4	14	9	5				LINE OUTPUTS, CH 9 TO 16	P09	
			4	14	9	8				LINE OUTPUTS, CH 9 TO 16	P09	
			4	14	9	11				LINE OUTPUTS, CH 9 TO 16	P09	
			4	14	9	13				LINE OUTPUTS, CH 9 TO 16	P09	
			4	14	9	15				LINE OUTPUTS, CH 9 TO 16	P09	
			4	14	9	18				LINE OUTPUTS, CH 9 TO 16	P09	
			4	14	9	21				LINE OUTPUTS, CH 9 TO 16	P09	
			4	14	9	24				LINE OUTPUTS, CH 9 TO 16	P09	
			5	1	1	2				LINE AMPLIFIER, CH17	J01	1.820.715.00
			5	1	1	5				LINE AMPLIFIER, CH17	J01	1.820.715.00
			5	1	1	9				LINE AMPLIFIER, CH17	J01	1.820.715.00
			5	1	1	13				LINE AMPLIFIER, CH17	J01	1.820.715.00
			5	1	1	21				LINE AMPLIFIER, CH17	J01	1.820.715.00
			5	1	2	1B				CONTROLLER INTERNAL NRS CH17	J02	1.820.815.00
			5	1	2	2A				CONTROLLER INTERNAL NRS CH17	J02	1.820.815.00
			5	1	2	3A				CONTROLLER INTERNAL NRS CH17	J02	1.820.815.00
			5	1	2	3B				CONTROLLER INTERNAL NRS CH17	J02	1.820.815.00
			5	1	2	4B				CONTROLLER INTERNAL NRS CH17	J02	1.820.815.00
			5	1	2	5A				CONTROLLER INTERNAL NRS CH17	J02	1.820.815.00
			5	1	2	6A				CONTROLLER INTERNAL NRS CH17	J02	1.820.815.00
			5	1	2	6B				CONTROLLER INTERNAL NRS CH17	J02	1.820.815.00
			5	1	2	9A				CONTROLLER INTERNAL NRS CH17	J02	1.820.815.00
			5	1	2	9B				CONTROLLER INTERNAL NRS CH17	J02	1.820.815.00
			5	1	2	13A				CONTROLLER INTERNAL NRS CH17	J02	1.820.815.00
			5	1	2	13B				CONTROLLER INTERNAL NRS CH17	J02	1.820.815.00
			5	1	2	17A				CONTROLLER INTERNAL NRS CH17	J02	1.820.815.00
			5	1	2	17B				CONTROLLER INTERNAL NRS CH17	J02	1.820.815.00
			5	1	2	20B				CONTROLLER INTERNAL NRS CH17	J02	1.820.815.00
			5	1	2	23A				CONTROLLER INTERNAL NRS CH17	J02	1.820.815.00

* WILLI STUDER AG * S I G N A L W I R E L I S T * 89/07/20 * 9:25 * P A G E 33 *
* * TAPE TRANSPORT & AUDIO MCH * * 89/04/19 - 00 *

SIGNAL NAME	COLOR	MI	ASY	GRP	ELM	PNT	S	LV	TYPE	DESCRIPTION OF ELEMENT		REMARK	ELEMENT NR.
<<-- CONT.OF			5	1	2	31A				CONTROLLER INTERNAL NRS CH17	J02		1.820.815.00
+ 0.0			5	1	2	31B				CONTROLLER INTERNAL NRS CH17	J02		1.820.815.00
			5	1	2	32B				CONTROLLER INTERNAL NRS CH17	J02		1.820.815.00
			5	1	3	5				REPRODUCE AMPLIFIER, CH17	J03		1.820.710.00
			5	1	3	8				REPRODUCE AMPLIFIER, CH17	J03		1.820.710.00
			5	1	3	11				REPRODUCE AMPLIFIER, CH17	J03		1.820.710.00
			5	1	3	14				REPRODUCE AMPLIFIER, CH17	J03		1.820.710.00
			5	1	3	18				REPRODUCE AMPLIFIER, CH17	J03		1.820.710.00
			5	1	3	21				REPRODUCE AMPLIFIER, CH17	J03		1.820.710.00
			5	1	4	5				RECORD AMPLIFIER, CH17	J04		1.820.811.00
			5	1	4	11				RECORD AMPLIFIER, CH17	J04		1.820.811.00
			5	1	4	14				RECORD AMPLIFIER, CH17	J04		1.820.811.00
			5	1	4	16				RECORD AMPLIFIER, CH17	J04		1.820.811.00
			5	1	4	21				RECORD AMPLIFIER, CH17	J04		1.820.811.00
			5	1	5	3				HF-DRIVER, CH17	J05		1.820.813.00
			5	1	5	4				HF-DRIVER, CH17	J05		1.820.813.00
			5	1	5	11				HF-DRIVER, CH17	J05		1.820.813.00
			5	1	5	16				HF-DRIVER, CH17	J05		1.820.813.00
			5	1	5	21				HF-DRIVER, CH17	J05		1.820.813.00
			5	1	6	2				LINE AMPLIFIER, CH18	J06		1.820.715.00
			5	1	6	5				LINE AMPLIFIER, CH18	J06		1.820.715.00
			5	1	6	9				LINE AMPLIFIER, CH18	J06		1.820.715.00
			5	1	6	13				LINE AMPLIFIER, CH18	J06		1.820.715.00
			5	1	6	21				LINE AMPLIFIER, CH18	J06		1.820.715.00
			5	1	7	1B				CONTROLLER INTERNAL NRS CH18	J07		1.820.815.00
			5	1	7	2A				CONTROLLER INTERNAL NRS CH18	J07		1.820.815.00
			5	1	7	3A				CONTROLLER INTERNAL NRS CH18	J07		1.820.815.00
			5	1	7	3B				CONTROLLER INTERNAL NRS CH18	J07		1.820.815.00
			5	1	7	4B				CONTROLLER INTERNAL NRS CH18	J07		1.820.815.00
			5	1	7	5A				CONTROLLER INTERNAL NRS CH18	J07		1.820.815.00
			5	1	7	6A				CONTROLLER INTERNAL NRS CH18	J07		1.820.815.00
			5	1	7	6B				CONTROLLER INTERNAL NRS CH18	J07		1.820.815.00
			5	1	7	9A				CONTROLLER INTERNAL NRS CH18	J07		1.820.815.00
			5	1	7	9B				CONTROLLER INTERNAL NRS CH18	J07		1.820.815.00
			5	1	7	13A				CONTROLLER INTERNAL NRS CH18	J07		1.820.815.00
			5	1	7	13B				CONTROLLER INTERNAL NRS CH18	J07		1.820.815.00
			5	1	7	17A				CONTROLLER INTERNAL NRS CH18	J07		1.820.815.00
			5	1	7	17B				CONTROLLER INTERNAL NRS CH18	J07		1.820.815.00
			5	1	7	20B				CONTROLLER INTERNAL NRS CH18	J07		1.820.815.00
			5	1	7	23A				CONTROLLER INTERNAL NRS CH18	J07		1.820.815.00
			5	1	7	31A				CONTROLLER INTERNAL NRS CH18	J07		1.820.815.00
			5	1	7	31B				CONTROLLER INTERNAL NRS CH18	J07		1.820.815.00
			5	1	7	32B				CONTROLLER INTERNAL NRS CH18	J07		1.820.815.00
			5	1	8	5				REPRODUCE AMPLIFIER, CH18	J08		1.820.710.00
			5	1	8	8				REPRODUCE AMPLIFIER, CH18	J08		1.820.710.00
			5	1	8	11				REPRODUCE AMPLIFIER, CH18	J08		1.820.710.00
			5	1	8	14				REPRODUCE AMPLIFIER, CH18	J08		1.820.710.00
			5	1	8	18				REPRODUCE AMPLIFIER, CH18	J08		1.820.710.00
			5	1	8	21				REPRODUCE AMPLIFIER, CH18	J08		1.820.710.00
			5	1	9	5				RECORD AMPLIFIER, CH18	J09		1.820.811.00
			5	1	9	11				RECORD AMPLIFIER, CH18	J09		1.820.811.00
			5	1	9	14				RECORD AMPLIFIER, CH18	J09		1.820.811.00
			5	1	9	16				RECORD AMPLIFIER, CH18	J09		1.820.811.00
			5	1	9	21				RECORD AMPLIFIER, CH18	J09		1.820.811.00

* WILLI STUDER AG * S I G N A L W I R E L I S T * 89/07/20 * 9:25 * P A G E 34 *
* * TAPE TRANSPORT & AUDIO MCH * * 89/04/19 - 00 *

SIGNAL NAME	COLOR	MI	ASY	GRP	ELM	PNT	S	LV	TYPE	DESCRIPTION OF ELEMENT		REMARK	ELEMENT NR.
<<-- CONT.OF			5	1	10	3				HF-DRIVER, CH18	J10		1.820.813.00
+ 0.0			5	1	10	4				HF-DRIVER, CH18	J10		1.820.813.00
			5	1	10	11				HF-DRIVER, CH18	J10		1.820.813.00
			5	1	10	16				HF-DRIVER, CH18	J10		1.820.813.00
			5	1	10	21				HF-DRIVER, CH18	J10		1.820.813.00
			5	1	11	2				LINE AMPLIFIER, CH19	J11		1.820.715.00
			5	1	11	5				LINE AMPLIFIER, CH19	J11		1.820.715.00
			5	1	11	9				LINE AMPLIFIER, CH19	J11		1.820.715.00
			5	1	11	13				LINE AMPLIFIER, CH19	J11		1.820.715.00
			5	1	11	21				LINE AMPLIFIER, CH19	J11		1.820.715.00
			5	1	12	1B				CONTROLLER INTERNAL NRS CH19	J12		1.820.815.00
			5	1	12	2A				CONTROLLER INTERNAL NRS CH19	J12		1.820.815.00
			5	1	12	3A				CONTROLLER INTERNAL NRS CH19	J12		1.820.815.00
			5	1	12	3B				CONTROLLER INTERNAL NRS CH19	J12		1.820.815.00
			5	1	12	4B				CONTROLLER INTERNAL NRS CH19	J12		1.820.815.00
			5	1	12	5A				CONTROLLER INTERNAL NRS CH19	J12		1.820.815.00
			5	1	12	6A				CONTROLLER INTERNAL NRS CH19	J12		1.820.815.00
			5	1	12	6B				CONTROLLER INTERNAL NRS CH19	J12		1.820.815.00
			5	1	12	9A				CONTROLLER INTERNAL NRS CH19	J12		1.820.815.00
			5	1	12	9B				CONTROLLER INTERNAL NRS CH19	J12		1.820.815.00
			5	1	12	13A				CONTROLLER INTERNAL NRS CH19	J12		1.820.815.00
			5	1	12	13B				CONTROLLER INTERNAL NRS CH19	J12		1.820.815.00
			5	1	12	17A				CONTROLLER INTERNAL NRS CH19	J12		1.820.815.00
			5	1	12	17B				CONTROLLER INTERNAL NRS CH19	J12		1.820.815.00
			5	1	12	20B				CONTROLLER INTERNAL NRS CH19	J12		1.820.815.00
			5	1	12	23A				CONTROLLER INTERNAL NRS CH19	J12		1.820.815.00
			5	1	12	31A				CONTROLLER INTERNAL NRS CH19	J12		1.820.815.00
			5	1	12	31B				CONTROLLER INTERNAL NRS CH19	J12		1.820.815.00
			5	1	12	32B				CONTROLLER INTERNAL NRS CH19	J12		1.820.815.00
			5	1	13	5				REPRODUCE AMPLIFIER, CH19	J13		1.820.710.00
			5	1	13	8				REPRODUCE AMPLIFIER, CH19	J13		1.820.710.00
			5	1	13	11				REPRODUCE AMPLIFIER, CH19	J13		1.820.710.00
			5	1	13	14				REPRODUCE AMPLIFIER, CH19	J13		1.820.710.00
			5	1	13	18				REPRODUCE AMPLIFIER, CH19	J13		1.820.710.00
			5	1	13	21				REPRODUCE AMPLIFIER, CH19	J13		1.820.710.00
			5	1	14	5				RECORD AMPLIFIER, CH19	J14		1.820.811.00
			5	1	14	11				RECORD AMPLIFIER, CH19	J14		1.820.811.00
			5	1	14	14				RECORD AMPLIFIER, CH19	J14		1.820.811.00
			5	1	14	16				RECORD AMPLIFIER, CH19	J14		1.820.811.00
			5	1	14	21				RECORD AMPLIFIER, CH19	J14		1.820.811.00
			5	1	15	3				HF-DRIVER, CH19	J15		1.820.813.00
			5	1	15	4				HF-DRIVER, CH19	J15		1.820.813.00
			5	1	15	11				HF-DRIVER, CH19	J15		1.820.813.00
			5	1	15	16				HF-DRIVER, CH19	J15		1.820.813.00
			5	1	15	21				HF-DRIVER, CH19	J15		1.820.813.00
			5	1	16	2				LINE AMPLIFIER, CH20	J16		1.820.715.00
			5	1	16	5				LINE AMPLIFIER, CH20	J16		1.820.715.00
			5	1	16	9				LINE AMPLIFIER, CH20	J16		1.820.715.00
			5	1	16	13				LINE AMPLIFIER, CH20	J16		1.820.715.00
			5	1	16	21				LINE AMPLIFIER, CH20	J16		1.820.715.00
			5	1	17	1B				CONTROLLER INTERNAL NRS CH20	J17		1.820.815.00
			5	1	17	2A				CONTROLLER INTERNAL NRS CH20	J17		1.820.815.00
			5	1	17	3A				CONTROLLER INTERNAL NRS CH20	J17		1.820.815.00
			5	1	17	3B				CONTROLLER INTERNAL NRS CH20	J17		1.820.815.00

```
*****************************************************************************************************************************
*    WILLI STUDER AG    *    S I G N A L     W I R E     L I S T              *  89/07/20  *   9:25  *   P A G E  35    *
*****************************************************************************************************************************
*                          * TAPE TRANSPORT & AUDIO MCH *                      *  89/04/19 - 00                            *
*****************************************************************************************************************************

SIGNAL NAME   COLOR  MI  ASY GRP ELM PNT  S  LV  TYPE            DESCRIPTION OF ELEMENT                  REMARK      ELEMENT NR.
-----------   -----  --  ---------------  -  --  --------------  ------------------------------------    ---------   ---------------
<<-- CONT.OF                5   1  17   4B                      CONTROLLER INTERNAL NRS CH20     J17                    1.820.815.00
+ 0.0                       5   1  17   5A                      CONTROLLER INTERNAL NRS CH20     J17                    1.820.815.00
                            5   1  17   6A                      CONTROLLER INTERNAL NRS CH20     J17                    1.820.815.00
                            5   1  17   6B                      CONTROLLER INTERNAL NRS CH20     J17                    1.820.815.00
                            5   1  17   9A                      CONTROLLER INTERNAL NRS CH20     J17                    1.820.815.00
                            5   1  17   9B                      CONTROLLER INTERNAL NRS CH20     J17                    1.820.815.00
                            5   1  17  13A                      CONTROLLER INTERNAL NRS CH20     J17                    1.820.815.00
                            5   1  17  13B                      CONTROLLER INTERNAL NRS CH20     J17                    1.820.815.00
                            5   1  17  17A                      CONTROLLER INTERNAL NRS CH20     J17                    1.820.815.00
                            5   1  17  17B                      CONTROLLER INTERNAL NRS CH20     J17                    1.820.815.00
                            5   1  17  20B                      CONTROLLER INTERNAL NRS CH20     J17                    1.820.815.00
                            5   1  17  23A                      CONTROLLER INTERNAL NRS CH20     J17                    1.820.815.00
                            5   1  17  31A                      CONTROLLER INTERNAL NRS CH20     J17                    1.820.815.00
                            5   1  17  31B                      CONTROLLER INTERNAL NRS CH20     J17                    1.820.815.00
                            5   1  17  32B                      CONTROLLER INTERNAL NRS CH20     J17                    1.820.815.00
                            5   1  18   5                       REPRODUCE AMPLIFIER, CH20        J18                    1.820.710.00
                            5   1  18   8                       REPRODUCE AMPLIFIER, CH20        J18                    1.820.710.00
                            5   1  18  11                       REPRODUCE AMPLIFIER, CH20        J18                    1.820.710.00
                            5   1  18  14                       REPRODUCE AMPLIFIER, CH20        J18                    1.820.710.00
                            5   1  18  18                       REPRODUCE AMPLIFIER, CH20        J18                    1.820.710.00
                            5   1  18  21                       REPRODUCE AMPLIFIER, CH20        J18                    1.820.710.00
                            5   1  19   5                       RECORD AMPLIFIER, CH20           J19                    1.820.811.00
                            5   1  19  11                       RECORD AMPLIFIER, CH20           J19                    1.820.811.00
                            5   1  19  14                       RECORD AMPLIFIER, CH20           J19                    1.820.811.00
                            5   1  19  16                       RECORD AMPLIFIER, CH20           J19                    1.820.811.00
                            5   1  19  21                       RECORD AMPLIFIER, CH20           J19                    1.820.811.00
                            5   1  20   3                       HF-DRIVER, CH20                  J20                    1.820.813.00
                            5   1  20   4                       HF-DRIVER, CH20                  J20                    1.820.813.00
                            5   1  20  11                       HF-DRIVER, CH20                  J20                    1.820.813.00
                            5   1  20  16                       HF-DRIVER, CH20                  J20                    1.820.813.00
                            5   1  20  21                       HF-DRIVER, CH20                  J20                    1.820.813.00
                            5   1  21  17A                      BUS CONVERTER                    J21                    1.820.717.00
                            5   1  21  17B                      BUS CONVERTER                    J21                    1.820.717.00
                            5   1  21  27A                      BUS CONVERTER                    J21                    1.820.717.00
                            5   1  21  27B                      BUS CONVERTER                    J21                    1.820.717.00
                            5   1  21  30A                      BUS CONVERTER                    J21                    1.820.717.00
                            5   1  21  30B                      BUS CONVERTER                    J21                    1.820.717.00
                            5   1  31   4                       LINE INPUT/OUTPUT, CH17          J22
                            5   1  31   7                       LINE INPUT/OUTPUT, CH17          J22
                            5   1  32   6                       NOISE REDUCTION, CH17            J23
                            5   1  32   8                       NOISE REDUCTION, CH17            J23
                            5   1  32  10                       NOISE REDUCTION, CH17            J23
                            5   1  32  12                       NOISE REDUCTION, CH17            J23
                            5   1  33   4                       REPRODUCE PREAMPLIFIER, CH17     J24
                            5   1  34   4                       RECORD HEAD, CH17                J25
                            5   1  36   4                       LINE INPUT/OUTPUT, CH18          J27
                            5   1  36   7                       LINE INPUT/OUTPUT, CH18          J27
                            5   1  37   6                       NOISE REDUCTION, CH18            J28
                            5   1  37   8                       NOISE REDUCTION, CH18            J28
                            5   1  37  10                       NOISE REDUCTION, CH18            J28
                            5   1  37  12                       NOISE REDUCTION, CH18            J28
                            5   1  38   4                       REPRODUCE PREAMPLIFIER, CH18     J29
                            5   1  39   4                       RECORD HEAD, CH18                J30
                            5   1  41   4                       LINE INPUT/OUTPUT, CH19          J32

*****************************************************************************************************************************
*    WILLI STUDER AG    *    S I G N A L     W I R E     L I S T              *  89/07/20  *   9:25  *   P A G E  36    *
*****************************************************************************************************************************
*                          * TAPE TRANSPORT & AUDIO MCH *                      *  89/04/19 - 00                            *
*****************************************************************************************************************************

SIGNAL NAME   COLOR  MI  ASY GRP ELM PNT  S  LV  TYPE            DESCRIPTION OF ELEMENT                  REMARK      ELEMENT NR.
-----------   -----  --  ---------------  -  --  --------------  ------------------------------------    ---------   ---------------
<<-- CONT.OF                5   1  41   7                       LINE INPUT/OUTPUT, CH19          J32
+ 0.0                       5   1  42   6                       NOISE REDUCTION, CH19            J33
                            5   1  42   8                       NOISE REDUCTION, CH19            J33
                            5   1  42  10                       NOISE REDUCTION, CH19            J33
                            5   1  42  12                       NOISE REDUCTION, CH19            J33
                            5   1  43   4                       REPRODUCE PREAMPLIFIER, CH19     J34
                            5   1  44   4                       RECORD HEAD, CH19                J35
                            5   1  46   4                       LINE INPUT/OUTPUT, CH20          J37
                            5   1  46   7                       LINE INPUT/OUTPUT, CH20          J37
                            5   1  47   6                       NOISE REDUCTION, CH20            J38
                            5   1  47   8                       NOISE REDUCTION, CH20            J38
                            5   1  47  10                       NOISE REDUCTION, CH20            J38
                            5   1  47  12                       NOISE REDUCTION, CH20            J38
                            5   1  48   4                       REPRODUCE PREAMPLIFIER, CH20     J39
                            5   1  49   4                       RECORD HEAD, CH20                J40
                            5   1  70   1                                                        P01
                            5   1  70   2                                                        P01
                            5   1  70  10                                                        P01
                            5   1  70  13                                                        P01
                            5   1  70  16                                                        P01
                            5   1  70  19                                                        P01
                            5   1  70  22                                                        P01
                            5   1  70  24                                                        P01
                            5   1  70  26                                                        P01
                            5   1  70  28                                                        P01
                            5   1  70  30                                                        P01
                            5   1  70  32                                                        P01
                            5   1  70  34                                                        P01
                            5   1  70  36                                                        P01
                            5   1  70  38                                                        P01
                            5   1  70  40                                                        P01
                            5   2   1   2                       LINE AMPLIFIER, CH21             J01                    1.820.715.00
                            5   2   1   5                       LINE AMPLIFIER, CH21             J01                    1.820.715.00
                            5   2   1   9                       LINE AMPLIFIER, CH21             J01                    1.820.715.00
                            5   2   1  13                       LINE AMPLIFIER, CH21             J01                    1.820.715.00
                            5   2   1  21                       LINE AMPLIFIER, CH21             J01                    1.820.715.00
                            5   2   2   1B                      CONTROLLER INTERNAL NRS CH21     J02                    1.820.815.00
                            5   2   2   2A                      CONTROLLER INTERNAL NRS CH21     J02                    1.820.815.00
                            5   2   2   3A                      CONTROLLER INTERNAL NRS CH21     J02                    1.820.815.00
                            5   2   2   3B                      CONTROLLER INTERNAL NRS CH21     J02                    1.820.815.00
                            5   2   2   4B                      CONTROLLER INTERNAL NRS CH21     J02                    1.820.815.00
                            5   2   2   5A                      CONTROLLER INTERNAL NRS CH21     J02                    1.820.815.00
                            5   2   2   6A                      CONTROLLER INTERNAL NRS CH21     J02                    1.820.815.00
                            5   2   2   6B                      CONTROLLER INTERNAL NRS CH21     J02                    1.820.815.00
                            5   2   2   9A                      CONTROLLER INTERNAL NRS CH21     J02                    1.820.815.00
                            5   2   2   9B                      CONTROLLER INTERNAL NRS CH21     J02                    1.820.815.00
                            5   2   2  13A                      CONTROLLER INTERNAL NRS CH21     J02                    1.820.815.00
                            5   2   2  13B                      CONTROLLER INTERNAL NRS CH21     J02                    1.820.815.00
                            5   2   2  17A                      CONTROLLER INTERNAL NRS CH21     J02                    1.820.815.00
                            5   2   2  17B                      CONTROLLER INTERNAL NRS CH21     J02                    1.820.815.00
                            5   2   2  20B                      CONTROLLER INTERNAL NRS CH21     J02                    1.820.815.00
                            5   2   2  23A                      CONTROLLER INTERNAL NRS CH21     J02                    1.820.815.00
                            5   2   2  31A                      CONTROLLER INTERNAL NRS CH21     J02                    1.820.815.00
                            5   2   2  31B                      CONTROLLER INTERNAL NRS CH21     J02                    1.820.815.00
```

WILLI STUDER AG * S I G N A L W I R E L I S T * 89/07/20 * 9:25 * P A G E 37

* TAPE TRANSPORT & AUDIO MCH * * 89/04/19 - 00

SIGNAL NAME	COLOR	MI	ASY	GRP	ELM	PNT	S	LV	TYPE	DESCRIPTION OF ELEMENT		REMARK	ELEMENT NR.
<<-- CONT.OF			5	2	2	32B				CONTROLLER INTERNAL NRS CH21	J02		1.820.815.00
+ 0.0			5	2	3	5				REPRODUCE AMPLIFIER, CH21	J03		1.820.710.00
			5	2	3	8				REPRODUCE AMPLIFIER, CH21	J03		1.820.710.00
			5	2	3	11				REPRODUCE AMPLIFIER, CH21	J03		1.820.710.00
			5	2	3	14				REPRODUCE AMPLIFIER, CH21	J03		1.820.710.00
			5	2	3	18				REPRODUCE AMPLIFIER, CH21	J03		1.820.710.00
			5	2	3	21				REPRODUCE AMPLIFIER, CH21	J03		1.820.710.00
			5	2	4	5				RECORD AMPLIFIER, CH21	J04		1.820.811.00
			5	2	4	11				RECORD AMPLIFIER, CH21	J04		1.820.811.00
			5	2	4	14				RECORD AMPLIFIER, CH21	J04		1.820.811.00
			5	2	4	16				RECORD AMPLIFIER, CH21	J04		1.820.811.00
			5	2	4	21				RECORD AMPLIFIER, CH21	J04		1.820.811.00
			5	2	5	3				HF-DRIVER, CH21	J05		1.820.813.00
			5	2	5	4				HF-DRIVER, CH21	J05		1.820.813.00
			5	2	5	11				HF-DRIVER, CH21	J05		1.820.813.00
			5	2	5	16				HF-DRIVER, CH21	J05		1.820.813.00
			5	2	5	21				HF-DRIVER, CH21	J05		1.820.813.00
			5	2	6	2				LINE AMPLIFIER, CH22	J06		1.820.715.00
			5	2	6	5				LINE AMPLIFIER, CH22	J06		1.820.715.00
			5	2	6	9				LINE AMPLIFIER, CH22	J06		1.820.715.00
			5	2	6	13				LINE AMPLIFIER, CH22	J06		1.820.715.00
			5	2	6	21				LINE AMPLIFIER, CH22	J06		1.820.715.00
			5	2	7	1B				CONTROLLER INTERNAL NRS CH22	J07		1.820.815.00
			5	2	7	2A				CONTROLLER INTERNAL NRS CH22	J07		1.820.815.00
			5	2	7	3A				CONTROLLER INTERNAL NRS CH22	J07		1.820.815.00
			5	2	7	3B				CONTROLLER INTERNAL NRS CH22	J07		1.820.815.00
			5	2	7	4B				CONTROLLER INTERNAL NRS CH22	J07		1.820.815.00
			5	2	7	5A				CONTROLLER INTERNAL NRS CH22	J07		1.820.815.00
			5	2	7	6A				CONTROLLER INTERNAL NRS CH22	J07		1.820.815.00
			5	2	7	6B				CONTROLLER INTERNAL NRS CH22	J07		1.820.815.00
			5	2	7	9A				CONTROLLER INTERNAL NRS CH22	J07		1.820.815.00
			5	2	7	9B				CONTROLLER INTERNAL NRS CH22	J07		1.820.815.00
			5	2	7	13A				CONTROLLER INTERNAL NRS CH22	J07		1.820.815.00
			5	2	7	13B				CONTROLLER INTERNAL NRS CH22	J07		1.820.815.00
			5	2	7	17A				CONTROLLER INTERNAL NRS CH22	J07		1.820.815.00
			5	2	7	17B				CONTROLLER INTERNAL NRS CH22	J07		1.820.815.00
			5	2	7	20B				CONTROLLER INTERNAL NRS CH22	J07		1.820.815.00
			5	2	7	23A				CONTROLLER INTERNAL NRS CH22	J07		1.820.815.00
			5	2	7	31A				CONTROLLER INTERNAL NRS CH22	J07		1.820.815.00
			5	2	7	31B				CONTROLLER INTERNAL NRS CH22	J07		1.820.815.00
			5	2	7	32B				CONTROLLER INTERNAL NRS CH22	J07		1.820.815.00
			5	2	8	5				REPRODUCE AMPLIFIER, CH22	J08		1.820.710.00
			5	2	8	8				REPRODUCE AMPLIFIER, CH22	J08		1.820.710.00
			5	2	8	11				REPRODUCE AMPLIFIER, CH22	J08		1.820.710.00
			5	2	8	14				REPRODUCE AMPLIFIER, CH22	J08		1.820.710.00
			5	2	8	18				REPRODUCE AMPLIFIER, CH22	J08		1.820.710.00
			5	2	8	21				REPRODUCE AMPLIFIER, CH22	J08		1.820.710.00
			5	2	9	5				RECORD AMPLIFIER, CH22	J09		1.820.811.00
			5	2	9	11				RECORD AMPLIFIER, CH22	J09		1.820.811.00
			5	2	9	14				RECORD AMPLIFIER, CH22	J09		1.820.811.00
			5	2	9	16				RECORD AMPLIFIER, CH22	J09		1.820.811.00
			5	2	9	21				RECORD AMPLIFIER, CH22	J09		1.820.811.00
			5	2	10	3				HF-DRIVER, CH22	J10		1.820.813.00
			5	2	10	4				HF-DRIVER, CH22	J10		1.820.813.00

WILLI STUDER AG * S I G N A L W I R E L I S T * 89/07/20 * 9:25 * P A G E 38

* TAPE TRANSPORT & AUDIO MCH * * 89/04/19 - 00

SIGNAL NAME	COLOR	MI	ASY	GRP	ELM	PNT	S	LV	TYPE	DESCRIPTION OF ELEMENT		REMARK	ELEMENT NR.
<<-- CONT.OF			5	2	10	11				HF-DRIVER, CH22	J10		1.820.813.00
+ 0.0			5	2	10	16				HF-DRIVER, CH22	J10		1.820.813.00
			5	2	10	21				HF-DRIVER, CH22	J10		1.820.813.00
			5	2	11	2				LINE AMPLIFIER, CH23	J11		1.820.715.00
			5	2	11	5				LINE AMPLIFIER, CH23	J11		1.820.715.00
			5	2	11	9				LINE AMPLIFIER, CH23	J11		1.820.715.00
			5	2	11	13				LINE AMPLIFIER, CH23	J11		1.820.715.00
			5	2	11	21				LINE AMPLIFIER, CH23	J11		1.820.715.00
			5	2	12	1B				CONTROLLER INTERNAL NRS CH23	J12		1.820.815.00
			5	2	12	2A				CONTROLLER INTERNAL NRS CH23	J12		1.820.815.00
			5	2	12	3A				CONTROLLER INTERNAL NRS CH23	J12		1.820.815.00
			5	2	12	3B				CONTROLLER INTERNAL NRS CH23	J12		1.820.815.00
			5	2	12	4B				CONTROLLER INTERNAL NRS CH23	J12		1.820.815.00
			5	2	12	5A				CONTROLLER INTERNAL NRS CH23	J12		1.820.815.00
			5	2	12	6A				CONTROLLER INTERNAL NRS CH23	J12		1.820.815.00
			5	2	12	6B				CONTROLLER INTERNAL NRS CH23	J12		1.820.815.00
			5	2	12	9A				CONTROLLER INTERNAL NRS CH23	J12		1.820.815.00
			5	2	12	9B				CONTROLLER INTERNAL NRS CH23	J12		1.820.815.00
			5	2	12	13A				CONTROLLER INTERNAL NRS CH23	J12		1.820.815.00
			5	2	12	13B				CONTROLLER INTERNAL NRS CH23	J12		1.820.815.00
			5	2	12	17A				CONTROLLER INTERNAL NRS CH23	J12		1.820.815.00
			5	2	12	17B				CONTROLLER INTERNAL NRS CH23	J12		1.820.815.00
			5	2	12	20B				CONTROLLER INTERNAL NRS CH23	J12		1.820.815.00
			5	2	12	23A				CONTROLLER INTERNAL NRS CH23	J12		1.820.815.00
			5	2	12	31A				CONTROLLER INTERNAL NRS CH23	J12		1.820.815.00
			5	2	12	31B				CONTROLLER INTERNAL NRS CH23	J12		1.820.815.00
			5	2	12	32B				CONTROLLER INTERNAL NRS CH23	J12		1.820.815.00
			5	2	13	5				REPRODUCE AMPLIFIER, CH23	J13		1.820.710.00
			5	2	13	8				REPRODUCE AMPLIFIER, CH23	J13		1.820.710.00
			5	2	13	11				REPRODUCE AMPLIFIER, CH23	J13		1.820.710.00
			5	2	13	14				REPRODUCE AMPLIFIER, CH23	J13		1.820.710.00
			5	2	13	18				REPRODUCE AMPLIFIER, CH23	J13		1.820.710.00
			5	2	13	21				REPRODUCE AMPLIFIER, CH23	J13		1.820.710.00
			5	2	14	5				RECORD AMPLIFIER, CH23	J14		1.820.811.00
			5	2	14	11				RECORD AMPLIFIER, CH23	J14		1.820.811.00
			5	2	14	14				RECORD AMPLIFIER, CH23	J14		1.820.811.00
			5	2	14	16				RECORD AMPLIFIER, CH23	J14		1.820.811.00
			5	2	14	21				RECORD AMPLIFIER, CH23	J14		1.820.811.00
			5	2	15	3				HF-DRIVER, CH23	J15		1.820.813.00
			5	2	15	4				HF-DRIVER, CH23	J15		1.820.813.00
			5	2	15	11				HF-DRIVER, CH23	J15		1.820.813.00
			5	2	15	16				HF-DRIVER, CH23	J15		1.820.813.00
			5	2	15	21				HF-DRIVER, CH23	J15		1.820.813.00
			5	2	16	2				LINE AMPLIFIER, CH24	J16		1.820.715.00
			5	2	16	5				LINE AMPLIFIER, CH24	J16		1.820.715.00
			5	2	16	9				LINE AMPLIFIER, CH24	J16		1.820.715.00
			5	2	16	13				LINE AMPLIFIER, CH24	J16		1.820.715.00
			5	2	16	21				LINE AMPLIFIER, CH24	J16		1.820.715.00
			5	2	17	1B				CONTROLLER INTERNAL NRS CH24	J17		1.820.815.00
			5	2	17	2A				CONTROLLER INTERNAL NRS CH24	J17		1.820.815.00
			5	2	17	3A				CONTROLLER INTERNAL NRS CH24	J17		1.820.815.00
			5	2	17	3B				CONTROLLER INTERNAL NRS CH24	J17		1.820.815.00
			5	2	17	4B				CONTROLLER INTERNAL NRS CH24	J17		1.820.815.00
			5	2	17	5A				CONTROLLER INTERNAL NRS CH24	J17		1.820.815.00

```
*    WILLI STUDER AG    *    S I G N A L    W I R E    L I S T                    * 89/07/20 *   9:25 *   P A G E  39   *
*                            * TAPE TRANSPORT & AUDIO MCH *                       * 89/04/19 - 00                      *
```

SIGNAL NAME	COLOR	MI	ASY	GRP	ELM	PNT	S	LV	TYPE	DESCRIPTION OF ELEMENT		REMARK	ELEMENT NR.
<<-- CONT.OF			5	2	17	6A				CONTROLLER INTERNAL NRS CH24	J17		1.820.815.00
+ 0.0			5	2	17	6B				CONTROLLER INTERNAL NRS CH24	J17		1.820.815.00
			5	2	17	9A				CONTROLLER INTERNAL NRS CH24	J17		1.820.815.00
			5	2	17	9B				CONTROLLER INTERNAL NRS CH24	J17		1.820.815.00
			5	2	17	13A				CONTROLLER INTERNAL NRS CH24	J17		1.820.815.00
			5	2	17	13B				CONTROLLER INTERNAL NRS CH24	J17		1.820.815.00
			5	2	17	17A				CONTROLLER INTERNAL NRS CH24	J17		1.820.815.00
			5	2	17	17B				CONTROLLER INTERNAL NRS CH24	J17		1.820.815.00
			5	2	17	20B				CONTROLLER INTERNAL NRS CH24	J17		1.820.815.00
			5	2	17	23A				CONTROLLER INTERNAL NRS CH24	J17		1.820.815.00
			5	2	17	31A				CONTROLLER INTERNAL NRS CH24	J17		1.820.815.00
			5	2	17	31B				CONTROLLER INTERNAL NRS CH24	J17		1.820.815.00
			5	2	17	32B				CONTROLLER INTERNAL NRS CH24	J17		1.820.815.00
			5	2	18	5				REPRODUCE AMPLIFIER, CH24	J18		1.820.710.00
			5	2	18	8				REPRODUCE AMPLIFIER, CH24	J18		1.820.710.00
			5	2	18	11				REPRODUCE AMPLIFIER, CH24	J18		1.820.710.00
			5	2	18	14				REPRODUCE AMPLIFIER, CH24	J18		1.820.710.00
			5	2	18	18				REPRODUCE AMPLIFIER, CH24	J18		1.820.710.00
			5	2	18	21				REPRODUCE AMPLIFIER, CH24	J18		1.820.710.00
			5	2	19	5				RECORD AMPLIFIER, CH24	J19		1.820.811.00
			5	2	19	11				RECORD AMPLIFIER, CH24	J19		1.820.811.00
			5	2	19	14				RECORD AMPLIFIER, CH24	J19		1.820.811.00
			5	2	19	16				RECORD AMPLIFIER, CH24	J19		1.820.811.00
			5	2	19	21				RECORD AMPLIFIER, CH24	J19		1.820.811.00
			5	2	20	3				HF-DRIVER, CH24	J20		1.820.813.00
			5	2	20	4				HF-DRIVER, CH24	J20		1.820.813.00
			5	2	20	11				HF-DRIVER, CH24	J20		1.820.813.00
			5	2	20	16				HF-DRIVER, CH24	J20		1.820.813.00
			5	2	20	21				HF-DRIVER, CH24	J20		1.820.813.00
			5	2	21	17A				BUS CONVERTER	J21		1.820.717.00
			5	2	21	17B				BUS CONVERTER	J21		1.820.717.00
			5	2	21	27A				BUS CONVERTER	J21		1.820.717.00
			5	2	21	27B				BUS CONVERTER	J21		1.820.717.00
			5	2	21	30A				BUS CONVERTER	J21		1.820.717.00
			5	2	21	30B				BUS CONVERTER	J21		1.820.717.00
			5	2	31	4				LINE INPUT/OUTPUT, CH21	J22		
			5	2	31	7				LINE INPUT/OUTPUT, CH21	J22		
			5	2	32	6				NOISE REDUCTION, CH21	J23		
			5	2	32	8				NOISE REDUCTION, CH21	J23		
			5	2	32	10				NOISE REDUCTION, CH21	J23		
			5	2	32	12				NOISE REDUCTION, CH21	J23		
			5	2	33	4				REPRODUCE PREAMPLIFIER, CH21	J24		
			5	2	34	4				RECORD HEAD, CH21	J25		
			5	2	36	4				LINE INPUT/OUTPUT, CH22	J27		
			5	2	36	7				LINE INPUT/OUTPUT, CH22	J27		
			5	2	37	6				NOISE REDUCTION, CH22	J28		
			5	2	37	8				NOISE REDUCTION, CH22	J28		
			5	2	37	10				NOISE REDUCTION, CH22	J28		
			5	2	37	12				NOISE REDUCTION, CH22	J28		
			5	2	38	4				REPRODUCE PREAMPLIFIER, CH22	J29		
			5	2	39	4				RECORD HEAD, CH22	J30		
			5	2	41	4				LINE INPUT/OUTPUT, CH23	J32		
			5	2	41	7				LINE INPUT/OUTPUT, CH23	J32		
			5	2	42	6				NOISE REDUCTION, CH23	J33		

```
*    WILLI STUDER AG    *    S I G N A L    W I R E    L I S T                    * 89/07/20 *   9:25 *   P A G E  40   *
*                            * TAPE TRANSPORT & AUDIO MCH *                       * 89/04/19 - 00                      *
```

SIGNAL NAME	COLOR	MI	ASY	GRP	ELM	PNT	S	LV	TYPE	DESCRIPTION OF ELEMENT		REMARK	ELEMENT NR.
<<-- CONT.OF			5	2	42	8				NOISE REDUCTION, CH23	J33		
+ 0.0			5	2	42	10				NOISE REDUCTION, CH23	J33		
			5	2	42	12				NOISE REDUCTION, CH23	J33		
			5	2	43	4				REPRODUCE PREAMPLIFIER, CH23	J34		
			5	2	44	4				RECORD HEAD, CH23	J35		
			5	2	46	4				LINE INPUT/OUTPUT, CH24	J37		
			5	2	46	7				LINE INPUT/OUTPUT, CH24	J37		
			5	2	47	6				NOISE REDUCTION, CH24	J38		
			5	2	47	8				NOISE REDUCTION, CH24	J38		
			5	2	47	10				NOISE REDUCTION, CH24	J38		
			5	2	47	12				NOISE REDUCTION, CH24	J38		
			5	2	48	4				REPRODUCE PREAMPLIFIER, CH24	J39		
			5	2	49	4				RECORD HEAD, CH24	J40		
			5	2	70	1					P01		
			5	2	70	2					P01		
			5	2	70	10					P01		
			5	2	70	13					P01		
			5	2	70	16					P01		
			5	2	70	19					P01		
			5	2	70	22					P01		
			5	2	70	24					P01		
			5	2	70	26					P01		
			5	2	70	28					P01		
			5	2	70	30					P01		
			5	2	70	32					P01		
			5	2	70	34					P01		
			5	2	70	36					P01		
			5	2	70	38					P01		
			5	2	70	40					P01		
			5	3	1	3				SUPPLY PREAMPLIFIER CH 9 TO 16	J01		
			5	3	2	3			BX	SUPPLY ASY05, GRP01	J02		
			5	3	2	4			BX	SUPPLY ASY05, GRP01	J02		
			5	3	3	3			BX	SUPPLY ASY05, GRP02	J03		
			5	3	3	4			BX	SUPPLY ASY05, GRP02	J03		
			5	3	4	3			BX	SUPPLY CONNECTOR	J04		
			5	3	4	4			BX	SUPPLY CONNECTOR	J04		
			5	3	5	3			BX	SUPPLY ASY05, GRP04 (NRS OPTION)	J05		
			5	3	5	4			BX	SUPPLY ASY05, GRP04 (NRS OPTION)	J05		
			5	4	1	16				NOISE REDUCTION UNIT CH17	J01		
			5	4	1	16T				NOISE REDUCTION UNIT CH17	J01		
			5	4	11	6			D	TO GRP01, ELM32 (AUDIO BASIS B.)	P01		
			5	4	11	8			D	TO GRP01, ELM32 (AUDIO BASIS B.)	P01		
			5	4	11	10			D	TO GRP01, ELM32 (AUDIO BASIS B.)	P01		
			5	4	11	12			D	TO GRP01, ELM32 (AUDIO BASIS B.)	P01		
			5	4	12	6			D	TO GRP01, ELM37 (AUDIO BASIS B.)	P02		
			5	4	12	8			D	TO GRP01, ELM37 (AUDIO BASIS B.)	P02		
			5	4	12	10			D	TO GRP01, ELM37 (AUDIO BASIS B.)	P02		
			5	4	12	12			D	TO GRP01, ELM37 (AUDIO BASIS B.)	P02		
			5	4	13	6			D	TO GRP01, ELM42 (AUDIO BASIS B.)	P03		
			5	4	13	8			D	TO GRP01, ELM42 (AUDIO BASIS B.)	P03		
			5	4	13	10			D	TO GRP01, ELM42 (AUDIO BASIS B.)	P03		
			5	4	13	12			D	TO GRP01, ELM42 (AUDIO BASIS B.)	P03		
			5	4	14	6			D	TO GRP01, ELM47 (AUDIO BASIS B.)	P04		
			5	4	14	8			D	TO GRP01, ELM47 (AUDIO BASIS B.)	P04		

```
*    WILLI STUDER AG    *    S I G N A L     W I R E     L I S T                 * 89/07/20  *   9:25  *   P A G E  41   *
*                                * TAPE TRANSPORT & AUDIO MCH *                                * 89/04/19 - 00                *
```

SIGNAL NAME	COLOR	MI	ASY	GRP	ELM	PNT	S	LV	TYPE	DESCRIPTION OF ELEMENT	REMARK	ELEMENT NR.
<<-- CONT.OF			5	4	14	10			D	TO GRP01, ELM47 (AUDIO BASIS B.) P04		
+ 0.0			5	4	14	12			D	TO GRP01, ELM47 (AUDIO BASIS B.) P04		
			5	4	15	6			D	TO GRP02, ELM32 (AUDIO BASIS B.) P05		
			5	4	15	8			D	TO GRP02, ELM32 (AUDIO BASIS B.) P05		
			5	4	15	10			D	TO GRP02, ELM32 (AUDIO BASIS B.) P05		
			5	4	15	12			D	TO GRP02, ELM32 (AUDIO BASIS B.) P05		
			5	4	16	6			D	TO GRP02, ELM37 (AUDIO BASIS B.) P06		
			5	4	16	8			D	TO GRP02, ELM37 (AUDIO BASIS B.) P06		
			5	4	16	10			D	TO GRP02, ELM37 (AUDIO BASIS B.) P06		
			5	4	16	12			D	TO GRP02, ELM37 (AUDIO BASIS B.) P06		
			5	4	17	6			D	TO GRP02, ELM42 (AUDIO BASIS B.) P07		
			5	4	17	8			D	TO GRP02, ELM42 (AUDIO BASIS B.) P07		
			5	4	17	10			D	TO GRP02, ELM42 (AUDIO BASIS B.) P07		
			5	4	17	12			D	TO GRP02, ELM42 (AUDIO BASIS B.) P07		
			5	4	18	6			D	TO GRP02, ELM47 (AUDIO BASIS B.) P08		
			5	4	18	8			D	TO GRP02, ELM47 (AUDIO BASIS B.) P08		
			5	4	18	10			D	TO GRP02, ELM47 (AUDIO BASIS B.) P08		
			5	4	18	12			D	TO GRP02, ELM47 (AUDIO BASIS B.) P08		
			5	4	19	3			AX	FROM GRP03, ELM05 (DISTR. B) P09		
			5	4	19	4			AX	FROM GRP03, ELM05 (DISTR. B) P09		
			5	11	1	1				LINE INPUT, CH17 XLR J01		
			5	11	2	1				LINE INPUT, CH18 XLR J02		
			5	11	3	1				LINE INPUT, CH19 XLR J03		
			5	11	4	1				LINE INPUT, CH20 XLR J04		
			5	11	5	1				LINE INPUT, CH21 XLR J05		
			5	11	6	1				LINE INPUT, CH22 XLR J06		
			5	11	7	1				LINE INPUT, CH23 XLR J07		
			5	11	8	1				LINE INPUT, CH24 XLR J08		
			5	11	9	2				LINE INPUTS, CH19 TO 24 P01		
			5	11	9	5				LINE INPUTS, CH19 TO 24 P01		
			5	11	9	8				LINE INPUTS, CH19 TO 24 P01		
			5	11	9	11				LINE INPUTS, CH19 TO 24 P01		
			5	11	9	13				LINE INPUTS, CH19 TO 24 P01		
			5	11	9	15				LINE INPUTS, CH19 TO 24 P01		
			5	11	9	18				LINE INPUTS, CH19 TO 24 P01		
			5	11	9	21				LINE INPUTS, CH19 TO 24 P01		
			5	11	9	24				LINE INPUTS, CH19 TO 24 P01		
			5	14	1	1				LINE OUTPUT, CH17 XLR P01		
			5	14	2	1				LINE OUTPUT, CH18 XLR P02		
			5	14	3	1				LINE OUTPUT, CH19 XLR P03		
			5	14	4	1				LINE OUTPUT, CH20 XLR P04		
			5	14	5	1				LINE OUTPUT, CH21 XLR P05		
			5	14	6	1				LINE OUTPUT, CH22 XLR P06		
			5	14	7	1				LINE OUTPUT, CH23 XLR P07		
			5	14	8	1				LINE OUTPUT, CH24 XLR P08		
			5	14	9	2				LINE OUTPUTS, CH19 TO 24 P09		
			5	14	9	5				LINE OUTPUTS, CH19 TO 24 P09		
			5	14	9	8				LINE OUTPUTS, CH19 TO 24 P09		
			5	14	9	11				LINE OUTPUTS, CH19 TO 24 P09		
			5	14	9	13				LINE OUTPUTS, CH19 TO 24 P09		
			5	14	9	15				LINE OUTPUTS, CH19 TO 24 P09		
			5	14	9	18				LINE OUTPUTS, CH19 TO 24 P09		
			5	14	9	21				LINE OUTPUTS, CH19 TO 24 P09		
			5	14	9	24				LINE OUTPUTS, CH19 TO 24 P09		

```
*    WILLI STUDER AG    *    S I G N A L     W I R E     L I S T                 * 89/07/20  *   9:25  *   P A G E  42   *
*                                * TAPE TRANSPORT & AUDIO MCH *                                * 89/04/19 - 00                *
```

SIGNAL NAME	COLOR	MI	ASY	GRP	ELM	PNT	S	LV	TYPE	DESCRIPTION OF ELEMENT	REMARK	ELEMENT NR.
<<-- CONT.OF			6	1	1	21				CONNECTOR MPU VU PANEL MCH J01		
+ 0.0			6	1	2	21				SERVICE BOARD J02		
			6	1	3	1				CONNECTOR LCD DISPLAY P03		
			6	1	3	16				CONNECTOR LCD DISPLAY P03		
			6	1	4	1				KEYBOARD DRIVER, MASTER P04		
			6	1	4	2				KEYBOARD DRIVER, MASTER P04		
			6	1	4	25				KEYBOARD DRIVER, MASTER P04		
			6	1	4	26				KEYBOARD DRIVER, MASTER P04		
			6	1	5	1				CONNECTOR BARGRAPHS P05		
			6	1	5	2				CONNECTOR BARGRAPHS P05		
			6	1	5	5				CONNECTOR BARGRAPHS P05		
			6	1	5	6				CONNECTOR BARGRAPHS P05		
			6	1	5	21				CONNECTOR BARGRAPHS P05		
			6	1	5	22				CONNECTOR BARGRAPHS P05		
			6	1	5	25				CONNECTOR BARGRAPHS P05		
			6	1	5	26				CONNECTOR BARGRAPHS P05		
			6	1	6	1				CH CONTROL KEYBOARD DRIVER P06		
			6	1	6	2				CH CONTROL KEYBOARD DRIVER P06		
			6	1	6	25				CH CONTROL KEYBOARD DRIVER P06		
			6	1	6	26				CH CONTROL KEYBOARD DRIVER P06		
			6	2	1	21				P01		
			6	3	1	21				P01		
	0		6	4	2	3			F	DC OUTPUT		
	0		6	4	2	6			F	DC OUTPUT		
			6	5	1	1				BUS P01		
			6	5	1	2				BUS P01		
			6	5	1	25				BUS P01		
			6	5	1	26				BUS P01		
			6	5	2	16				KEYBOARD P02		
			6	6	1	1				BUS P01		
			6	6	1	2				BUS P01		
			6	6	1	25				BUS P01		
			6	6	1	26				BUS P01		
			6	6	2	16				KEYBOARD P02		
			6	7	1	1				BUS P01		
			6	7	1	2				BUS P01		
			6	7	1	25				BUS P01		
			6	7	1	26				BUS P01		
			6	7	2	16				KEYBOARD P02		
			6	8	1	1				BUS P01		
			6	8	1	2				BUS P01		
			6	8	1	25				BUS P01		
			6	8	1	26				BUS P01		
			6	8	2	16				KEYBOARD MASTER J01		
			6	9	1	16				P01		
			6	10	1	16				P01		
			6	11	1	16				P01		
			6	12	1	16				P01		
			6	13	1	1				BARGRAPHS BOARD, CH 01 TO 08 P01		1.820.736.00
			6	13	1	2				BARGRAPHS BOARD, CH 01 TO 08 P01		1.820.736.00
			6	13	1	5				BARGRAPHS BOARD, CH 01 TO 08 P01		1.820.736.00
			6	13	1	6				BARGRAPHS BOARD, CH 01 TO 08 P01		1.820.736.00
			6	13	1	21				BARGRAPHS BOARD, CH 01 TO 08 P01		1.820.736.00
			6	13	1	22				BARGRAPHS BOARD, CH 01 TO 08 P01		1.820.736.00

```
*    WILLI STUDER AG   *    S I G N A L    W I R E    L I S T              * 89/07/20 *   9:25 *   P A G E  43   *
*                      * TAPE TRANSPORT & AUDIO MCH *                       * 89/04/19 - 00                        *
```

SIGNAL NAME	COLOR	MI	ASY	GRP	ELM	PNT	S	LV	TYPE	DESCRIPTION OF ELEMENT		REMARK	ELEMENT NR.
<<-- CONT.OF			6	13	1	25				BARGRAPHS BOARD, CH 01 TO 08	P01		1.820.736.00
+ 0.0			6	13	1	26				BARGRAPHS BOARD, CH 01 TO 08	P01		1.820.736.00
			6	14	1	1				BARGRAPHS BOARD, CH 09 TO 16	P01		1.820.736.00
			6	14	1	2				BARGRAPHS BOARD, CH 09 TO 16	P01		1.820.736.00
			6	14	1	5				BARGRAPHS BOARD, CH 09 TO 16	P01		1.820.736.00
			6	14	1	6				BARGRAPHS BOARD, CH 09 TO 16	P01		1.820.736.00
			6	14	1	21				BARGRAPHS BOARD, CH 09 TO 16	P01		1.820.736.00
			6	14	1	22				BARGRAPHS BOARD, CH 09 TO 16	P01		1.820.736.00
			6	14	1	25				BARGRAPHS BOARD, CH 09 TO 16	P01		1.820.736.00
			6	14	1	26				BARGRAPHS BOARD, CH 09 TO 16	P01		1.820.736.00
			6	15	1	1				BARGRAPHS BOARD, CH 17 TO 24	P01		1.820.736.00
			6	15	1	2				BARGRAPHS BOARD, CH 17 TO 24	P01		1.820.736.00
			6	15	1	5				BARGRAPHS BOARD, CH 17 TO 24	P01		1.820.736.00
			6	15	1	6				BARGRAPHS BOARD, CH 17 TO 24	P01		1.820.736.00
			6	15	1	21				BARGRAPHS BOARD, CH 17 TO 24	P01		1.820.736.00
			6	15	1	22				BARGRAPHS BOARD, CH 17 TO 24	P01		1.820.736.00
			6	15	1	25				BARGRAPHS BOARD, CH 17 TO 24	P01		1.820.736.00
			6	15	1	26				BARGRAPHS BOARD, CH 17 TO 24	P01		1.820.736.00
			6	16	1	1				BUS	P01		
			6	16	1	2				BUS	P01		
			6	16	1	25				BUS	P01		
			6	16	1	26				BUS	P01		
			6	52	1	1				TO GRP01, ELM03	J01		
			6	52	1	16				TO GRP01, ELM03	J01		
+ 0.0T	6		1	28	3	2				TO MECHANICAL TIMER	P03		
+ 5.0			1	22	9	1			BX	POWER SUPPLY FLOPPY TD	J11		
	2		1	23	1	4			L	BICODE/PILOT	J01		
	2		1	23	5	4			L	BICODE	J05		
	1		1	23	9	1			B	LOCAL CONTROL UNIT	J08		
	3		1	23	9	2			B	LOCAL CONTROL UNIT	J08		
	5		1	23	9	3			B	LOCAL CONTROL UNIT	J08		
	2		1	23	9	9			B	LOCAL CONTROL UNIT	J08		
	4		1	23	9	10			B	LOCAL CONTROL UNIT	J08		
	6		1	23	9	11			B	LOCAL CONTROL UNIT	J08		
			1	26	1	2				FROM PAR. REM. IF	P01		
			1	27	1	2				TO GRP26, ELM01 (SERIAL REM. IF)	P01		
			1	48	2	3				CONNECTOR EDIT ASSEMBLY			
			1	49	1	3				FROM GRP48, ELM02 (PUSHBUTTON BOARD)			
			1	49	2	1				WIRE FIELD			
			1	50	4	2				CONNECTOR LCD DISPLAY UNIT	P04		
			1	52	1	2				FROM GRP50, ELM04 (DISPLAY DRIVER)			
			6	5	2	30				KEYBOARD	P02		
			6	6	2	30				KEYBOARD	P02		
			6	7	2	30				KEYBOARD	P02		
			6	8	2	30				KEYBOARD MASTER	J01		
			6	9	1	30					P01		
			6	10	1	30					P01		
			6	11	1	30					P01		
			6	12	1	30					P01		

```
*    WILLI STUDER AG   *    S I G N A L    W I R E    L I S T              * 89/07/20 *   9:25 *   P A G E  44   *
*                      * TAPE TRANSPORT & AUDIO MCH *                       * 89/04/19 - 00                        *
```

SIGNAL NAME	COLOR	MI	ASY	GRP	ELM	PNT	S	LV	TYPE	DESCRIPTION OF ELEMENT		REMARK	ELEMENT NR.
+ 5.6			1	20	1	3				SPOOLING M. DRIVE AMP. LEFT	P01		
			1	20	1	4				SPOOLING M. DRIVE AMP. LEFT	P01		
			1	20	2	3				SPOOLING M. DRIVE AMP. RIGHT	P02		
			1	20	2	4				SPOOLING M. DRIVE AMP. RIGHT	P02		
			1	20	3	3				CAPSTAN M. DRIVE AMPLIFIER	P03		
			1	20	3	4				CAPSTAN M. DRIVE AMPLIFIER	P03		
			1	20	4	3				PAR. CONT. INT. SYNCHRONIZER	P04		
			1	20	4	4				PAR. CONT. INT. SYNCHRONIZER	P04		
			1	20	6	3				OPTO + EXTENDED SENSORS	P06		
			1	20	6	4				OPTO + EXTENDED SENSORS	P06		
			1	20	7	3				TAPE LIFT MOTOR, LEFT	P07		
			1	20	7	4				TAPE LIFT MOTOR, LEFT	P07		
			1	20	8	3				TAPE LIFT MOTOR, RIGHT	P08		
			1	20	8	4				TAPE LIFT MOTOR, RIGHT	P08		
			1	20	9	3				TACHO SENSOR SPOOLING M. LEFT	P09		
			1	20	9	4				TACHO SENSOR SPOOLING M. LEFT	P09		
			1	20	10	3				TACHO SENSOR SPOOLING M. RIGHT	P10		
			1	20	10	4				TACHO SENSOR SPOOLING M. RIGHT	P10		
			1	20	11	3				MOVE SENSOR	P11		
			1	20	11	4				MOVE SENSOR	P11		
			1	20	12	3				TAPE TENSION SENSOR, LEFT	P12		
			1	20	12	4				TAPE TENSION SENSOR, LEFT	P12		
			1	20	13	3				TAPE TENSION SENSOR, RIGHT	P13		
			1	20	13	4				TAPE TENSION SENSOR, RIGHT	P13		
			1	20	14	9				FUSE FAILURE DETECTOR	P14		
			1	20	14	10				FUSE FAILURE DETECTOR	P14		
			1	20	15	3				DISPLAY DRIVER	P15		
			1	20	15	4				DISPLAY DRIVER	P15		
			1	20	16	3				PARALLEL REMOTE INTERFACE	P16		
			1	20	16	4				PARALLEL REMOTE INTERFACE	P16		
			1	20	17	3				TO HEAD BLOCK ASSEMBLY	P17		
			1	20	17	4				TO HEAD BLOCK ASSEMBLY	P17		
			1	20	18	3				RESERVE	P18		
			1	20	18	4				RESERVE	P18		
			1	20	19	3				MECHANICAL ELAPSED TIMER	P19		
			1	20	19	4				MECHANICAL ELAPSED TIMER	P19		
			1	20	40	20				SPOOLING MOTOR DRIVER	J01		1.820.759.00
			1	20	41	20				CAPSTAN CONTROL UNIT	J02		1.820.764.00
			1	20	42	16A				CAPSTAN INTERFACE	J03		1.820.727.00
			1	20	42	16B				CAPSTAN INTERFACE	J03		1.820.727.00
			1	20	43	16A				TAPE DECK PERIPHERY CONTR.	J04		1.820.762.00
			1	20	43	16B				TAPE DECK PERIPHERY CONTR.	J04		1.820.762.00
			1	20	44	20				TAPE DECK COUNTER / TIMER	J05		1.820.761.00
			1	20	45	20				SPOOLING MOTOR CONTROLLER	J06		1.820.822.00
			1	20	46	20				MP-UNIT TD CONTROL MCH	J07		1.820.781.00
			1	20	47	20				TAPE DECK SERIAL INTERFACE	J08		1.820.763.00
			1	20	48	16A				MASTER SERIAL INTERFACE	J09		1.820.753.00
			1	20	48	16B				MASTER SERIAL INTERFACE	J09		1.820.753.00
			1	20	49	20				MP-UNIT MASTER MCH	J10		1.820.784.00
			1	20	50	20				SMPTE/EBU INTERFACE	J11		1.820.751.00
			1	20	51	18A				MASTER TO AUDIO INTERFACE	J12		1.820.756.00
			1	20	51	18B				MASTER TO AUDIO INTERFACE	J12		1.820.756.00
	3		1	20	62	1			L	WIRE FIELD			
	3		1	20	62	2			L	WIRE FIELD			
	3		1	20	70	1			F	FROM GRP35, ELM59	J13		

WILLI STUDER AG * S I G N A L W I R E L I S T * 89/07/20 * 9:25 * P A G E 45
* TAPE TRANSPORT & AUDIO MCH * * 89/04/19 - 00

SIGNAL NAME	COLOR	MI	ASY	GRP	ELM	PNT	S	LV	TYPE	DESCRIPTION OF ELEMENT		REMARK	ELEMENT NR.
<<-- CONT.OF	3		1	20	70	2			F	FROM GRP35, ELM59	J13		
+ 5.6			1	21	8	1			BX	FROM GRP35, ELM61	J01		
			1	21	20	20				COMMUNICATIONS CONTROLLER	J05		1.820.718.00
			1	21	21	20				MPU AUDIO CONTROL MCH	J06		1.820.782.00
			1	21	22	20				GENERATOR UNIT MCH	J07		1.820.725.00
			1	21	23	20B				CONTROLLER EXTERNAL NRS	J08		1.820.816.00
			1	21	24	20C				BUS DRIVER MCH	J09		1.820.723.00
			1	21	50	3				TO AUDIO RACK CH 1 TO 8	P10		
			1	21	50	4				TO AUDIO RACK CH 1 TO 8	P10		
			1	21	51	3				TO AUDIO RACK CH 9 TO 16	P11		
			1	21	51	4				TO AUDIO RACK CH 9 TO 16	P11		
			1	21	52	3				TO AUDIO RACK CH 17 TO 24	P12		
			1	21	52	4				TO AUDIO RACK CH 17 TO 24	P12		
			1	22	8	1			BX	FROM GRP35, ELM61	J01		
			1	22	20	20				COMMUNICATIONS CONTROLLER	J05		1.820.718.00
			1	22	21	20				MPU AUDIO CONTROL MCH	J06		1.820.782.00
			1	22	22	20				GENERATOR UNIT MCH	J07		1.820.725.00
			1	22	23	20A				CONTROLLER EXTERNAL NRS	J08		1.820.816.00
			1	22	23	20B				CONTROLLER EXTERNAL NRS	J08		1.820.816.00
			1	22	24	20C				BUS DRIVER MCH	J09		1.820.723.00
			1	22	25	3A				FLOPPY DISK CONTROLLER	J10		1.820.726.00
			1	22	25	3B				FLOPPY DISK CONTROLLER	J10		1.820.726.00
			1	22	25	20A				FLOPPY DISK CONTROLLER	J10		1.820.726.00
			1	22	25	20B				FLOPPY DISK CONTROLLER	J10		1.820.726.00
			1	22	50	3				TO AUDIO RACK CH 1 TO 8	P10		
			1	22	50	4				TO AUDIO RACK CH 1 TO 8	P10		
			1	22	51	3				TO AUDIO RACK CH 9 TO 16	P11		
			1	22	51	4				TO AUDIO RACK CH 9 TO 16	P11		
			1	22	52	3				TO AUDIO RACK CH 17 TO 24	P12		
			1	22	52	4				TO AUDIO RACK CH 17 TO 24	P12		
			1	27	2	3				FROM GRP20, ELM16 (BASIS BOARD)	P02		
			1	27	2	4				FROM GRP20, ELM16 (BASIS BOARD)	P02		
			1	28	1	3				FROM B. BOARD TAPE DECK, ELM 19	P01		
			1	28	1	4				FROM B. BOARD TAPE DECK, ELM 19	P01		
			1	28	2	3				TO VU-METER PANEL	P02		
			1	28	2	4				TO VU-METER PANEL	P02		
			1	29	5	3				FROM GRP20, ELM02 (BASIS B. TD)	P01		
			1	29	5	4				FROM GRP20, ELM02 (BASIS B. TD)	P01		
			1	29	6	3				TO SPOOLING M. DRIVE AMP. RIGHT	P02		
			1	29	6	4				TO SPOOLING M. DRIVE AMP. RIGHT	P02		
			1	30	2	3				FROM GRP29, ELM06	P01		
			1	30	2	4				FROM GRP29, ELM06	P01		
			1	31	1	3				FROM DISTRIBUTION BOARD (ELM20)	P01		
			1	31	1	4				FROM DISTRIBUTION BOARD (ELM20)	P01		
			1	32	1	3				FROM DISTRIBUTION BOARD (ELM21)	P01		
			1	32	1	4				FROM DISTRIBUTION BOARD (ELM21)	P01		
			1	32	2	9			BX	DC OUTPUT (GRP35, ELM55)	P02		
			1	32	2	10			BX	DC OUTPUT (GRP35, ELM55)	P02		
			1	33	2	3				FROM GRP20, ELM01 (BASIS B. TD)	P01		
			1	33	2	4				FROM GRP20, ELM01 (BASIS B. TD)	P01		
	3		1	35	18	1			U	WIRE FIELD			
	3		1	35	18	2			U	WIRE FIELD			
	3		1	35	18	3			L	WIRE FIELD			
	3		1	35	18	4			L	WIRE FIELD			

WILLI STUDER AG * S I G N A L W I R E L I S T * 89/07/20 * 9:25 * P A G E 46
* TAPE TRANSPORT & AUDIO MCH * * 89/04/19 - 00

SIGNAL NAME	COLOR	MI	ASY	GRP	ELM	PNT	S	LV	TYPE	DESCRIPTION OF ELEMENT		REMARK	ELEMENT NR.
<<-- CONT.OF	3		1	35	18	5			L	WIRE FIELD			
+ 5.6			1	35	18	6				WIRE FIELD			
			1	35	18	7				WIRE FIELD			
			1	35	18	8				WIRE FIELD			
			1	35	18	9				WIRE FIELD			
			1	35	18	10				WIRE FIELD			
			1	35	18	11				WIRE FIELD			
			1	35	18	12				WIRE FIELD			
			1	35	20	3				TO GRP31, ELM01	P01		
			1	35	20	4				TO GRP31, ELM01	P01		
			1	35	21	3				TO GRP32, ELM01	P02		
			1	35	21	4				TO GRP32, ELM01	P02		
			1	35	22	1			BX	AUDIO RACK CH 1 TO 8	J01		
			1	35	23	1			BX	AUDIO RACK CH 9 TO 16	J02		
			1	35	24	1			BX	AUDIO RACK CH 17 TO 24	J03		
	3		1	35	55	9			AX	FROM GRP32, ELM02	P06		
	3		1	35	55	10			AX	FROM GRP32, ELM02	P06		
	3		1	35	59	1			M	TO GRP20, ELM70	P10		
	3		1	35	59	2			M	TO GRP20, ELM70	P10		
	3		1	35	61	1			AX	TO GRP21, ELM08	P12		
			1	36	1	3				TACHO SENSOR	P01		1.820.771.00
			1	36	1	4				TACHO SENSOR	P01		1.820.771.00
			1	37	1	3				TACHO SENSOR	P01		1.820.771.00
			1	37	1	4				TACHO SENSOR	P01		1.820.771.00
			1	39	1	3				FROM GRP20, ELM03 (BASIS B. TD)	P01		
			1	39	1	4				FROM GRP20, ELM03 (BASIS B. TD)	P01		
			1	42	1	3				FROM GRP20, ELM12 (BASIS B. TD)	P01		
			1	42	1	4				FROM GRP20, ELM12 (BASIS B. TD)	P01		
			1	43	1	3				FROM GRP20, ELM13 (BASIS B. TD)	P01		
			1	43	1	4				FROM GRP20, ELM13 (BASIS B. TD)	P01		
			1	44	1	3				FROM GRP20, ELM06	P01		
			1	44	1	4				FROM GRP20, ELM06	P01		
			1	45	1	3				FROM GRP20, ELM11	P01		
			1	45	1	4				FROM GRP20, ELM11	P01		
			1	46	1	3				FROM GRP20, ELM07	P01		
			1	46	1	4				FROM GRP20, ELM07	P01		
			1	47	1	3				FROM GRP20, ELM08 (BASIS B. TD)	P01		
			1	47	1	4				FROM GRP20, ELM08 (BASIS B. TD)	P01		
			1	48	1	3				FROM GRP50, ELM03 (DISPLAY DRIVER)			
			1	48	1	4				FROM GRP50, ELM03 (DISPLAY DRIVER)			
			1	50	1	3				FROM GRP20, ELM15 (BASIS B. TD)	P01		
			1	50	1	4				FROM GRP20, ELM15 (BASIS B. TD)	P01		
			1	50	2	3				CONNECTOR PUSHBUTTON ASSEMBLY	P03		
			1	50	2	4				CONNECTOR PUSHBUTTON ASSEMBLY	P03		
			1	50	3	3				CONNECTOR COMMAND UNIT	P02		
			1	50	3	4				CONNECTOR COMMAND UNIT	P02		
			1	51	1	3				FROM GRP50,ELM02 (DISPLAY DRIVER)			
			1	51	1	4				FROM GRP50,ELM02 (DISPLAY DRIVER)			
			1	59	1	9				FROM GRP20, ELM14 (BASIS B. TD)	P01		
			1	59	1	10				FROM GRP20, ELM14 (BASIS B. TD)	P01		
			1	60	1	3				FROM GR. 20 ELM 08	P01		
			1	60	1	4				FROM GR. 20 ELM 08	P01		
			1	60	2	3				FROM GR. 20 ELM 11	P02		
			1	60	2	4				FROM GR. 20 ELM 11	P02		

```
*    WILLI STUDER AG   *    S I G N A L     W I R E     L I S T              * 89/07/20 *   9:25 *   P A G E  47   *
*                      * TAPE TRANSPORT & AUDIO MCH *                        * 89/04/19 - 00                          *
```

SIGNAL NAME	COLOR	MI	ASY	GRP	ELM	PNT	S	LV	TYPE	DESCRIPTION OF ELEMENT		REMARK	ELEMENT NR.
<<-- CONT.OF			1	60	3	3				FROM GR. 20 ELM 10	P03		
+ 5.6			1	60	3	4				FROM GR. 20 ELM 10	P03		
			1	60	4	3				FROM GR. 20 ELM 09	P04		
			1	60	4	4				FROM GR. 20 ELM 09	P04		
			1	60	5	3				TO TAPE LIFT MOTOR, RIGHT	P05		
			1	60	5	4				TO TAPE LIFT MOTOR, RIGHT	P05		
			1	60	6	3				TO MOVE SENSOR	P06		
			1	60	6	4				TO MOVE SENSOR	P06		
			1	60	7	3				TO TACHO SENSOR SP. MOTOR RIGHT	P07		
			1	60	7	4				TO TACHO SENSOR SP. MOTOR RIGHT	P07		
			1	60	8	3				TO TACHO SENSOR SP. MOTOR LEFT	P08		
			1	60	8	4				TO TACHO SENSOR SP. MOTOR LEFT	P08		
			2	1	7	2				REPRODUCE HEAD, CH 01 TO 08	P07		
			2	1	8	2				REPRODUCE HEAD, CH 09 TO 16	P08		
			2	1	9	2				REPRODUCE HEAD, CH 17 TO 24	P09		
			2	1	10	2				HEAD BLOCK IDENTIFIER	P10		1.820.795.00
			2	1	10	15				HEAD BLOCK IDENTIFIER	P10		1.820.795.00
			2	2	1	2				INPUT	J01		
			2	2	2	2				OUTPUT	P01		
			2	3	1	2				INPUT	J01		
			2	3	2	2				OUTPUT	P01		
			2	4	1	2				INPUT	J01		
			2	4	2	2				OUTPUT	P01		
			3	1	1	24				LINE AMPLIFIER, CH 1	J01		1.820.715.00
			3	1	2	16A				CONTROLLER INTERNAL NRS CH 1	J02		1.820.815.00
			3	1	2	16B				CONTROLLER INTERNAL NRS CH 1	J02		1.820.815.00
			3	1	3	24				REPRODUCE AMPLIFIER, CH 1	J03		1.820.710.00
			3	1	4	24				RECORD AMPLIFIER, CH 1	J04		1.820.811.00
			3	1	5	24				HF-DRIVER, CH 1	J05		1.820.813.00
			3	1	6	24				LINE AMPLIFIER, CH 2	J06		1.820.715.00
			3	1	7	16A				CONTROLLER INTERNAL NRS CH 2	J07		1.820.815.00
			3	1	7	16B				CONTROLLER INTERNAL NRS CH 2	J07		1.820.815.00
			3	1	8	24				REPRODUCE AMPLIFIER, CH 2	J08		1.820.710.00
			3	1	9	24				RECORD AMPLIFIER, CH 2	J09		1.820.811.00
			3	1	10	24				HF-DRIVER, CH 2	J10		1.820.813.00
			3	1	11	24				LINE AMPLIFIER, CH 3	J11		1.820.715.00
			3	1	12	16A				CONTROLLER INTERNAL NRS CH 3	J12		1.820.815.00
			3	1	12	16B				CONTROLLER INTERNAL NRS CH 3	J12		1.820.815.00
			3	1	13	24				REPRODUCE AMPLIFIER, CH 3	J13		1.820.710.00
			3	1	14	24				RECORD AMPLIFIER, CH 3	J14		1.820.811.00
			3	1	15	24				HF-DRIVER, CH 3	J15		1.820.813.00
			3	1	16	24				LINE AMPLIFIER, CH 4	J16		1.820.715.00
			3	1	17	16A				CONTROLLER INTERNAL NRS CH 4	J17		1.820.815.00
			3	1	17	16B				CONTROLLER INTERNAL NRS CH 4	J17		1.820.815.00
			3	1	18	24				REPRODUCE AMPLIFIER, CH 4	J18		1.820.710.00
			3	1	19	24				RECORD AMPLIFIER, CH 4	J19		1.820.811.00
			3	1	20	24				HF-DRIVER, CH 4	J20		1.820.813.00
			3	1	21	16A				BUS CONVERTER	J21		1.820.717.00
			3	1	21	16B				BUS CONVERTER	J21		1.820.717.00
			3	1	70	3					P01		
			3	1	70	4					P01		
			3	2	1	24				LINE AMPLIFIER, CH 5	J01		1.820.715.00
			3	2	2	16A				CONTROLLER INTERNAL NRS CH 5	J02		1.820.815.00
			3	2	2	16B				CONTROLLER INTERNAL NRS CH 5	J02		1.820.815.00

```
*    WILLI STUDER AG   *    S I G N A L     W I R E     L I S T              * 89/07/20 *   9:25 *   P A G E  48   *
*                      * TAPE TRANSPORT & AUDIO MCH *                        * 89/04/19 - 00                          *
```

SIGNAL NAME	COLOR	MI	ASY	GRP	ELM	PNT	S	LV	TYPE	DESCRIPTION OF ELEMENT		REMARK	ELEMENT NR.
<<-- CONT.OF			3	2	3	24				REPRODUCE AMPLIFIER, CH 5	J03		1.820.710.00
+ 5.6			3	2	4	24				RECORD AMPLIFIER, CH 5	J04		1.820.811.00
			3	2	5	24				HF-DRIVER, CH 5	J05		1.820.813.00
			3	2	6	24				LINE AMPLIFIER, CH 6	J06		1.820.715.00
			3	2	7	16A				CONTROLLER INTERNAL NRS CH 6	J07		1.820.815.00
			3	2	7	16B				CONTROLLER INTERNAL NRS CH 6	J07		1.820.815.00
			3	2	8	24				REPRODUCE AMPLIFIER, CH 6	J08		1.820.710.00
			3	2	9	24				RECORD AMPLIFIER, CH 6	J09		1.820.811.00
			3	2	10	24				HF-DRIVER, CH 6	J10		1.820.813.00
			3	2	11	24				LINE AMPLIFIER, CH 7	J11		1.820.715.00
			3	2	12	16A				CONTROLLER INTERNAL NRS CH 7	J12		1.820.815.00
			3	2	12	16B				CONTROLLER INTERNAL NRS CH 7	J12		1.820.815.00
			3	2	13	24				REPRODUCE AMPLIFIER, CH 7	J13		1.820.710.00
			3	2	14	24				RECORD AMPLIFIER, CH 7	J14		1.820.811.00
			3	2	15	24				HF-DRIVER, CH 7	J15		1.820.813.00
			3	2	16	24				LINE AMPLIFIER, CH 8	J16		1.820.715.00
			3	2	17	16A				CONTROLLER INTERNAL NRS CH 8	J17		1.820.815.00
			3	2	17	16B				CONTROLLER INTERNAL NRS CH 8	J17		1.820.815.00
			3	2	18	24				REPRODUCE AMPLIFIER, CH 8	J18		1.820.710.00
			3	2	19	24				RECORD AMPLIFIER, CH 8	J19		1.820.811.00
			3	2	20	24				HF-DRIVER, CH 8	J20		1.820.813.00
			3	2	21	16A				BUS CONVERTER	J21		1.820.717.00
			3	2	21	16B				BUS CONVERTER	J21		1.820.717.00
			3	2	70	3					P01		
			3	2	70	4					P01		
			3	3	1	1				SUPPLY PREAMPLIFIER CH 1 TO 8	J01		
			3	3	2	1			BX	SUPPLY ASY03, GRP01	J02		
			3	3	3	1			BX	SUPPLY ASY03, GRP02	J03		
			3	3	4	1			BX	SUPPLY CONNECTOR	J04		
			3	3	5	1			BX	SUPPLY ASY03, GRP04 (NRS OPTION)	J05		
	3		3	4	10	1			AX	TO GRP03, ELM05	P10		
			4	1	1	24				LINE AMPLIFIER, CH 9	J01		1.820.715.00
			4	1	2	16A				CONTROLLER INTERNAL NRS CH 9	J02		1.820.815.00
			4	1	2	16B				CONTROLLER INTERNAL NRS CH 9	J02		1.820.815.00
			4	1	3	24				REPRODUCE AMPLIFIER, CH 9	J03		1.820.710.00
			4	1	4	24				RECORD AMPLIFIER, CH 9	J04		1.820.811.00
			4	1	5	24				HF-DRIVER, CH 9	J05		1.820.813.00
			4	1	6	24				LINE AMPLIFIER, CH10	J06		1.820.715.00
			4	1	7	16A				CONTROLLER INTERNAL NRS CH10	J07		1.820.815.00
			4	1	7	16B				CONTROLLER INTERNAL NRS CH10	J07		1.820.815.00
			4	1	8	24				REPRODUCE AMPLIFIER, CH10	J08		1.820.710.00
			4	1	9	24				RECORD AMPLIFIER, CH10	J09		1.820.811.00
			4	1	10	24				HF-DRIVER, CH10	J10		1.820.813.00
			4	1	11	24				LINE AMPLIFIER, CH11	J11		1.820.715.00
			4	1	12	16A				CONTROLLER INTERNAL NRS CH11	J12		1.820.815.00
			4	1	12	16B				CONTROLLER INTERNAL NRS CH11	J12		1.820.815.00
			4	1	13	24				REPRODUCE AMPLIFIER, CH11	J13		1.820.710.00
			4	1	14	24				RECORD AMPLIFIER, CH11	J14		1.820.811.00
			4	1	15	24				HF-DRIVER, CH11	J15		1.820.813.00
			4	1	16	24				LINE AMPLIFIER, CH12	J16		1.820.715.00
			4	1	17	16A				CONTROLLER INTERNAL NRS CH12	J17		1.820.815.00
			4	1	17	16B				CONTROLLER INTERNAL NRS CH12	J17		1.820.815.00
			4	1	18	24				REPRODUCE AMPLIFIER, CH12	J18		1.820.710.00
			4	1	19	24				RECORD AMPLIFIER, CH12	J19		1.820.811.00

```
*****************************************************************************************************************************
*   WILLI STUDER AG   *   S I G N A L     W I R E     L I S T              * 89/07/20 *  9:25 *  P A G E  49   *
*****************************************************************************************************************************
*                         * TAPE TRANSPORT & AUDIO MCH *                    * 89/04/19 - 00                              *
*****************************************************************************************************************************

SIGNAL NAME   COLOR  MI  ASY GRP ELM PNT  S  LV  TYPE          DESCRIPTION OF ELEMENT                    REMARK     ELEMENT NR.
-----------   -----  --  ---------------  -  --  ----------  ------------------------------------  ---------  ---------------
<<-- CONT.OF                4   1  20  24                     HF-DRIVER, CH12                       J20                1.820.813.00
+ 5.6                       4   1  21  16A                    BUS CONVERTER                         J21                1.820.717.00
                            4   1  21  16B                    BUS CONVERTER                         J21                1.820.717.00
                            4   1  70   3                                                          P01
                            4   1  70   4                                                          P01
                            4   2   1  24                     LINE AMPLIFIER, CH13                  J01                1.820.715.00
                            4   2   2  16A                    CONTROLLER INTERNAL NRS CH13          J02                1.820.815.00
                            4   2   2  16B                    CONTROLLER INTERNAL NRS CH13          J02                1.820.815.00
                            4   2   3  24                     REPRODUCE AMPLIFIER, CH13             J03                1.820.710.00
                            4   2   4  24                     RECORD AMPLIFIER, CH13                J04                1.820.811.00
                            4   2   5  24                     HF-DRIVER, CH13                       J05                1.820.813.00
                            4   2   6  24                     LINE AMPLIFIER, CH14                  J06                1.820.715.00
                            4   2   7  16A                    CONTROLLER INTERNAL NRS CH14          J07                1.820.815.00
                            4   2   7  16B                    CONTROLLER INTERNAL NRS CH14          J07                1.820.815.00
                            4   2   8  24                     REPRODUCE AMPLIFIER, CH14             J08                1.820.710.00
                            4   2   9  24                     RECORD AMPLIFIER, CH14                J09                1.820.811.00
                            4   2  10  24                     HF-DRIVER, CH14                       J10                1.820.813.00
                            4   2  11  24                     LINE AMPLIFIER, CH15                  J11                1.820.715.00
                            4   2  12  16A                    CONTROLLER INTERNAL NRS CH15          J12                1.820.815.00
                            4   2  12  16B                    CONTROLLER INTERNAL NRS CH15          J12                1.820.815.00
                            4   2  13  24                     REPRODUCE AMPLIFIER, CH15             J13                1.820.710.00
                            4   2  14  24                     RECORD AMPLIFIER, CH15                J14                1.820.811.00
                            4   2  15  24                     HF-DRIVER, CH15                       J15                1.820.813.00
                            4   2  16  24                     LINE AMPLIFIER, CH16                  J16                1.820.715.00
                            4   2  17  16A                    CONTROLLER INTERNAL NRS CH16          J17                1.820.815.00
                            4   2  17  16B                    CONTROLLER INTERNAL NRS CH16          J17                1.820.815.00
                            4   2  18  24                     REPRODUCE AMPLIFIER, CH16             J18                1.820.710.00
                            4   2  19  24                     RECORD AMPLIFIER, CH16                J19                1.820.811.00
                            4   2  20  24                     HF-DRIVER, CH16                       J20                1.820.813.00
                            4   2  21  16A                    BUS CONVERTER                         J21                1.820.717.00
                            4   2  21  16B                    BUS CONVERTER                         J21                1.820.717.00
                            4   2  70   3                                                          P01
                            4   2  70   4                                                          P01
                            4   3   1   1                     SUPPLY PREAMPLIFIER CH17 TO 24        J01
                            4   3   2   1          BX         SUPPLY ASY04, GRP01                   J02
                            4   3   3   1          BX         SUPPLY ASY04, GRP02                   J03
                            4   3   4   1          BX         SUPPLY CONNECTOR                      J04
                            4   3   5   1          BX         SUPPLY ASY04, GRP04 (NRS OPTION)      J05
                            4   4  19   1          AX         FROM GRP03, ELM05 (DISTR. B)          P09
                            5   1   1  24                     LINE AMPLIFIER, CH17                  J01                1.820.715.00
                            5   1   2  16A                    CONTROLLER INTERNAL NRS CH17          J02                1.820.815.00
                            5   1   2  16B                    CONTROLLER INTERNAL NRS CH17          J02                1.820.815.00
                            5   1   3  24                     REPRODUCE AMPLIFIER, CH17             J03                1.820.710.00
                            5   1   4  24                     RECORD AMPLIFIER, CH17                J04                1.820.811.00
                            5   1   5  24                     HF-DRIVER, CH17                       J05                1.820.813.00
                            5   1   6  24                     LINE AMPLIFIER, CH18                  J06                1.820.715.00
                            5   1   7  16A                    CONTROLLER INTERNAL NRS CH18          J07                1.820.815.00
                            5   1   7  16B                    CONTROLLER INTERNAL NRS CH18          J07                1.820.815.00
                            5   1   8  24                     REPRODUCE AMPLIFIER, CH18             J08                1.820.710.00
                            5   1   9  24                     RECORD AMPLIFIER, CH18                J09                1.820.811.00
                            5   1  10  24                     HF-DRIVER, CH18                       J10                1.820.813.00
                            5   1  11  24                     LINE AMPLIFIER, CH19                  J11                1.820.715.00
                            5   1  12  16A                    CONTROLLER INTERNAL NRS CH19          J12                1.820.815.00
                            5   1  12  16B                    CONTROLLER INTERNAL NRS CH19          J12                1.820.815.00

*****************************************************************************************************************************
*   WILLI STUDER AG   *   S I G N A L     W I R E     L I S T              * 89/07/20 *  9:25 *  P A G E  50   *
*****************************************************************************************************************************
*                         * TAPE TRANSPORT & AUDIO MCH *                    * 89/04/19 - 00                              *
*****************************************************************************************************************************

SIGNAL NAME   COLOR  MI  ASY GRP ELM PNT  S  LV  TYPE          DESCRIPTION OF ELEMENT                    REMARK     ELEMENT NR.
-----------   -----  --  ---------------  -  --  ----------  ------------------------------------  ---------  ---------------
<<-- CONT.OF                5   1  13  24                     REPRODUCE AMPLIFIER, CH19             J13                1.820.710.00
+ 5.6                       5   1  14  24                     RECORD AMPLIFIER, CH19                J14                1.820.811.00
                            5   1  15  24                     HF-DRIVER, CH19                       J15                1.820.813.00
                            5   1  16  24                     LINE AMPLIFIER, CH20                  J16                1.820.715.00
                            5   1  17  16A                    CONTROLLER INTERNAL NRS CH20          J17                1.820.815.00
                            5   1  17  16B                    CONTROLLER INTERNAL NRS CH20          J17                1.820.815.00
                            5   1  18  24                     REPRODUCE AMPLIFIER, CH20             J18                1.820.710.00
                            5   1  19  24                     RECORD AMPLIFIER, CH20                J19                1.820.811.00
                            5   1  20  24                     HF-DRIVER, CH20                       J20                1.820.813.00
                            5   1  21  16A                    BUS CONVERTER                         J21                1.820.717.00
                            5   1  21  16B                    BUS CONVERTER                         J21                1.820.717.00
                            5   1  70   3                                                          P01
                            5   1  70   4                                                          P01
                            5   2   1  24                     LINE AMPLIFIER, CH21                  J01                1.820.715.00
                            5   2   2  16A                    CONTROLLER INTERNAL NRS CH21          J02                1.820.815.00
                            5   2   2  16B                    CONTROLLER INTERNAL NRS CH21          J02                1.820.815.00
                            5   2   3  24                     REPRODUCE AMPLIFIER, CH21             J03                1.820.710.00
                            5   2   4  24                     RECORD AMPLIFIER, CH21                J04                1.820.811.00
                            5   2   5  24                     HF-DRIVER, CH21                       J05                1.820.813.00
                            5   2   6  24                     LINE AMPLIFIER, CH22                  J06                1.820.715.00
                            5   2   7  16A                    CONTROLLER INTERNAL NRS CH22          J07                1.820.815.00
                            5   2   7  16B                    CONTROLLER INTERNAL NRS CH22          J07                1.820.815.00
                            5   2   8  24                     REPRODUCE AMPLIFIER, CH22             J08                1.820.710.00
                            5   2   9  24                     RECORD AMPLIFIER, CH22                J09                1.820.811.00
                            5   2  10  24                     HF-DRIVER, CH22                       J10                1.820.813.00
                            5   2  11  24                     LINE AMPLIFIER, CH23                  J11                1.820.715.00
                            5   2  12  16A                    CONTROLLER INTERNAL NRS CH23          J12                1.820.815.00
                            5   2  12  16B                    CONTROLLER INTERNAL NRS CH23          J12                1.820.815.00
                            5   2  13  24                     REPRODUCE AMPLIFIER, CH23             J13                1.820.710.00
                            5   2  14  24                     RECORD AMPLIFIER, CH23                J14                1.820.811.00
                            5   2  15  24                     HF-DRIVER, CH23                       J15                1.820.813.00
                            5   2  16  24                     LINE AMPLIFIER, CH24                  J16                1.820.715.00
                            5   2  17  16A                    CONTROLLER INTERNAL NRS CH24          J17                1.820.815.00
                            5   2  17  16B                    CONTROLLER INTERNAL NRS CH24          J17                1.820.815.00
                            5   2  18  24                     REPRODUCE AMPLIFIER, CH24             J18                1.820.710.00
                            5   2  19  24                     RECORD AMPLIFIER, CH24                J19                1.820.811.00
                            5   2  20  24                     HF-DRIVER, CH24                       J20                1.820.813.00
                            5   2  21  16A                    BUS CONVERTER                         J21                1.820.717.00
                            5   2  21  16B                    BUS CONVERTER                         J21                1.820.717.00
                            5   2  70   3                                                          P01
                            5   2  70   4                                                          P01
                            5   3   1   1                     SUPPLY PREAMPLIFIER CH 9 TO 16        J01
                            5   3   2   1          BX         SUPPLY ASY05, GRP01                   J02
                            5   3   3   1          BX         SUPPLY ASY05, GRP02                   J03
                            5   3   4   1          BX         SUPPLY CONNECTOR                      J04
                            5   3   5   1          BX         SUPPLY ASY05, GRP04 (NRS OPTION)      J05
                            5   4  19   1          AX         FROM GRP03, ELM05 (DISTR. B)          P09
                            6   1   1  20                     CONNECTOR MPU VU PANEL MCH            J01
                            6   1   2  20                     SERVICE BOARD                         J02
                            6   1   3   2                     CONNECTOR LCD DISPLAY                 P03
                            6   1   4   3                     KEYBOARD DRIVER, MASTER               P04
                            6   1   4   4                     KEYBOARD DRIVER, MASTER               P04
                            6   1   4  23                     KEYBOARD DRIVER, MASTER               P04
                            6   1   4  24                     KEYBOARD DRIVER, MASTER               P04
```

```
*****************************************************************************************************************************
*    WILLI STUDER AG    *    S I G N A L    W I R E    L I S T              * 89/07/20  *   9:25  *  P A G E  51   *
*****************************************************************************************************************************
*                          * TAPE TRANSPORT & AUDIO MCH *                    *  89/04/19 - 00                          *
*****************************************************************************************************************************

SIGNAL NAME   COLOR  MI  ASY GRP ELM PNT  S  LV  TYPE          DESCRIPTION OF ELEMENT                    REMARK     ELEMENT NR.
-----------   -----  --  ---------------  -  --  ------------  ----------------------------------------  ---------  ----------------
<<-- CONT.OF                6   1   5   3                    CONNECTOR BARGRAPHS                P05
+ 5.6                       6   1   5   4                    CONNECTOR BARGRAPHS                P05
                            6   1   5   7                    CONNECTOR BARGRAPHS                P05
                            6   1   5   8                    CONNECTOR BARGRAPHS                P05
                            6   1   5  23                    CONNECTOR BARGRAPHS                P05
                            6   1   5  24                    CONNECTOR BARGRAPHS                P05
                            6   1   6   3                    CH CONTROL KEYBOARD DRIVER         P06
                            6   1   6   4                    CH CONTROL KEYBOARD DRIVER         P06
                            6   1   6  23                    CH CONTROL KEYBOARD DRIVER         P06
                            6   1   6  24                    CH CONTROL KEYBOARD DRIVER         P06
                            6   2   1  20                                                       P01
                            6   3   1  20                                                       P01
                3           6   4   2   2              F     DC OUTPUT
                3           6   4   2   5              F     DC OUTPUT
                            6   5   1   3                    BUS                                P01
                            6   5   1   4                    BUS                                P01
                            6   5   1  23                    BUS                                P01
                            6   5   1  24                    BUS                                P01
                            6   6   1   3                    BUS                                P01
                            6   6   1   4                    BUS                                P01
                            6   6   1  23                    BUS                                P01
                            6   6   1  24                    BUS                                P01
                            6   7   1   3                    BUS                                P01
                            6   7   1   4                    BUS                                P01
                            6   7   1  23                    BUS                                P01
                            6   7   1  24                    BUS                                P01
                            6   8   1   3                    BUS                                P01
                            6   8   1   4                    BUS                                P01
                            6   8   1  23                    BUS                                P01
                            6   8   1  24                    BUS                                P01
                            6  13   1   3                    BARGRAPHS BOARD, CH 01 TO 08       P01        1.820.736.00
                            6  13   1   4                    BARGRAPHS BOARD, CH 01 TO 08       P01        1.820.736.00
                            6  13   1   7                    BARGRAPHS BOARD, CH 01 TO 08       P01        1.820.736.00
                            6  13   1   8                    BARGRAPHS BOARD, CH 01 TO 08       P01        1.820.736.00
                            6  13   1  23                    BARGRAPHS BOARD, CH 01 TO 08       P01        1.820.736.00
                            6  13   1  24                    BARGRAPHS BOARD, CH 01 TO 08       P01        1.820.736.00
                            6  14   1   3                    BARGRAPHS BOARD, CH 09 TO 16       P01        1.820.736.00
                            6  14   1   4                    BARGRAPHS BOARD, CH 09 TO 16       P01        1.820.736.00
                            6  14   1   7                    BARGRAPHS BOARD, CH 09 TO 16       P01        1.820.736.00
                            6  14   1   8                    BARGRAPHS BOARD, CH 09 TO 16       P01        1.820.736.00
                            6  14   1  23                    BARGRAPHS BOARD, CH 09 TO 16       P01        1.820.736.00
                            6  14   1  24                    BARGRAPHS BOARD, CH 09 TO 16       P01        1.820.736.00
                            6  15   1   3                    BARGRAPHS BOARD, CH 17 TO 24       P01        1.820.736.00
                            6  15   1   4                    BARGRAPHS BOARD, CH 17 TO 24       P01        1.820.736.00
                            6  15   1   7                    BARGRAPHS BOARD, CH 17 TO 24       P01        1.820.736.00
                            6  15   1   8                    BARGRAPHS BOARD, CH 17 TO 24       P01        1.820.736.00
                            6  15   1  23                    BARGRAPHS BOARD, CH 17 TO 24       P01        1.820.736.00
                            6  15   1  24                    BARGRAPHS BOARD, CH 17 TO 24       P01        1.820.736.00
                            6  16   1   3                    BUS                                P01
                            6  16   1   4                    BUS                                P01
                            6  16   1  23                    BUS                                P01
                            6  16   1  24                    BUS                                P01
                            6  52   1   2                    TO GRP01, ELM03                    J01
-----------   -----  --  ---------------  -  --  ------------  ----------------------------------------  ---------  ----------------

*****************************************************************************************************************************
*    WILLI STUDER AG    *    S I G N A L    W I R E    L I S T              * 89/07/20  *   9:25  *  P A G E  52   *
*****************************************************************************************************************************
*                          * TAPE TRANSPORT & AUDIO MCH *                    *  89/04/19 - 00                          *
*****************************************************************************************************************************

SIGNAL NAME   COLOR  MI  ASY GRP ELM PNT  S  LV  TYPE          DESCRIPTION OF ELEMENT                    REMARK     ELEMENT NR.
-----------   -----  --  ---------------  -  --  ------------  ----------------------------------------  ---------  ----------------
+ 5V                        1  38   1   9                    F     FROM GRP39, ELM02            J01
                            1  39   2   9                    M     TO GRP38, ELM01 (CAPSTAN MOTOR)  P02
-----------   -----  --  ---------------  -  --  ------------  ----------------------------------------  ---------  ----------------
+SENS          4           6   4   2   1              F     DC OUTPUT
-----------   -----  --  ---------------  -  --  ------------  ----------------------------------------  ---------  ----------------
+STABIN        2           7   8   1   3              L                                        DZ01               70.01.0232
              2           7   8   2   3              L                                        DZ02               70.01.0232
              2           7   8   3   3              L                                        DZ03               70.01.0232
              2           7   8   4   3              L                                        DZ04               70.01.0232
                          7   9   1   1                    CAPACITOR                          C01                59.C7.0004
                          7   9   2   1                    CAPACITOR                          C02                59.07.0004
                          7   9   3   1                    CAPACITOR                          C03                59.07.0004
              2           7   9   4   8              L     INPUT START RELAIS                 K01                56.02.0105
              2           7   9   6   1              J     INPUT, POS.                                           54.33.6007
              2           7   9   6   2              J     INPUT, POS.                                           54.33.6007
              2           7   9   6   3              J     INPUT, POS.                                           54.33.6007
              2           7   9   6   4              J     INPUT, POS.                                           54.33.6007
              2           7   9   6   5              J     INPUT, POS.                                           54.33.6007
              2           7   9   7   1              J     OUTPUT, POS.                                          54.33.6007
              2           7   9   7   2              J     OUTPUT, POS.                                          54.33.6007
              2           7   9   7   3              J     OUTPUT, POS.                                          54.33.6007
              2           7   9   7   4              J     OUTPUT, POS.                                          54.33.6007
                          7   9   9   1              L     RESISTOR                           R02                57.92.4152
              2           7  10   1   1              J     FUSE                               F01                51.01.0125
              2           7  10   2   1              J     FUSE                               F02                51.01.0125
              2           7  10   3   1              J     FUSE                               F03                51.01.0229
              2           7  10   4   1              J     FUSE                               F04                51.01.0229
              2           7  14   1   1              BX                                                        54.25.0308
-----------   -----  --  ---------------  -  --  ------------  ----------------------------------------  ---------  ----------------
+STABIN1                    1  20  14   7                    FUSE FAILURE DETECTOR              P14
                            1  20  14   8                    FUSE FAILURE DETECTOR              P14
              3             1  20  62   4              U     WIRE FIELD
              3             1  20  70  17              F     FROM GRP35, ELM59                  J13
                            1  30   1   4              BX    SUPPLY INPUT                       J03
                            1  33   1   4              BX    SUPPLY INPUT                       J03
              2             1  35  11   1              U     WIRE FIELD
              2             1  35  11   2              L     WIRE FIELD
              2             1  35  11   3              L     WIRE FIELD
                            1  35  11   4                    WIRE FIELD
              2             1  35  52   4              AX    FROM GRP30, ELM01                  P03
              2             1  35  57   4              AX    TO GRP33, ELM01                    P08
              2             1  35  58   1              AX    FROM ASY07, GRP11, ELM01           P09
              2             1  35  59  17              M     TO GRP20, ELM70                    P10
                            1  59   1   7                    FROM GRP20, ELM14 (BASIS B. TD)  P01
                            1  59   1   8                    FROM GRP20, ELM14 (BASIS B. TD)  P01
              2             7  10   1   2              J     FUSE                               F01                51.01.0125
              2             7  11   1   1              BX                                       J02                54.25.0310
              2             7  14   1   7              BX                                                        54.25.0308
              2             7  14   1   8              BX                                                        54.25.0308
-----------   -----  --  ---------------  -  --  ------------  ----------------------------------------  ---------  ----------------
+STABIN2                    1  20  14   5                    FUSE FAILURE DETECTOR              P14
              5             1  20  62   5              U     WIRE FIELD
              5             1  20  70  18              F     FROM GRP35, ELM59                  J13
                            1  31   3   3              BX    DC INPUT (GRP35, ELM54)            P03
                            1  31   3   4              BX    DC INPUT (GRP35, ELM54)            P03
```

* WILLI STUDER AG * S I G N A L W I R E L I S T * 89/07/20 * 9:25 * P A G E 53 *
* * TAPE TRANSPORT & AUDIO MCH * * 89/04/19 - 00 *

SIGNAL NAME	COLOR	MI	ASY	GRP	ELM	PNT	S	LV	TYPE	DESCRIPTION OF ELEMENT		REMARK	ELEMENT NR.
<<-- CONT.OF	2		1	35	10	1			U	WIRE FIELD			
+STABIN2	2		1	35	10	2			L	WIRE FIELD			
	2		1	35	10	3			L	WIRE FIELD			
	2		1	35	10	4			L	WIRE FIELD			
	2		1	35	54	3			AX	TO GRP31, ELM03	P05		
	2		1	35	54	4			AX	TO GRP31, ELM03	P05		
	2		1	35	58	3			AX	FROM ASY07, GRP11, ELM01	P09		
	2		1	35	59	18			M	TO GRP20, ELM70	P10		
			1	59	1	5				FROM GRP20, ELM14 (BASIS B. TD)	P01		
	2		7	10	2	2			J	FUSE	F02		51.01.0125
	2		7	11	1	3			BX		J02		54.25.0310
+STABIN3			1	20	14	1				FUSE FAILURE DETECTOR	P14		
			1	20	14	2				FUSE FAILURE DETECTOR	P14		
	2		1	20	62	6			L	WIRE FIELD			
	2		1	20	62	7			L	WIRE FIELD			
	2		1	20	70	24			F	FROM GRP35, ELM59	J13		
	2		1	20	71	6			F	TO CAPSTAN MOTOR DRIVE AMPLIFIER	P24		
			1	32	3	2			BX	DC INPUT (GRP35, ELM56)	P03		
	2		1	35	7	1			U	WIRE FIELD			
	2		1	35	7	2			L	WIRE FIELD			
	2		1	35	7	3			L	WIRE FIELD			
			1	35	7	4				WIRE FIELD			
			1	35	7	5				WIRE FIELD			
			1	35	7	6				WIRE FIELD			
			1	35	7	7				WIRE FIELD			
			1	35	7	8				WIRE FIELD			
	2		1	35	56	2			AX	TO GRP32, ELM03	P07		
	2		1	35	58	5			AX	FROM ASY07, GRP11, ELM01	P09		
	2		1	35	59	24			M	TO GRP20, ELM70	P10		
			1	39	3	6			M	FROM GRP20, ELM71 (BASIS B. TD)	P03		
			1	59	1	1				FROM GRP20, ELM14 (BASIS B. TD)	P01		
			1	59	1	2				FROM GRP20, ELM14 (BASIS B. TD)	P01		
	2		7	10	3	2			J	FUSE	F03		51.01.0229
	2		7	11	1	5			BX		J02		54.25.0310
+STABIN4			1	20	16	5				PARALLEL REMOTE INTERFACE	P16		
			1	20	16	6				PARALLEL REMOTE INTERFACE	P16		
	8		1	20	62	10			L	WIRE FIELD			
	8		1	20	70	16			F	FROM GRP35, ELM59	J13		
	2		1	24	7	4			L	VU METER PANEL EXTERNAL			
	2		1	24	7	5			L	VU METER PANEL EXTERNAL			
	2		1	24	7	6			L	VU METER PANEL EXTERNAL			
			1	25	1	9			B	CONN. AUTOLOCATOR, REMOTE TIMER	J01		
			1	26	1	3				FROM PAR. REM. IF	P01		
			1	26	2	8				TO GRP25, ELM01 (REMOTE PANEL)	P02		
			1	27	1	3				TO GRP26, ELM01 (SERIAL REM. IF)	P01		
			1	27	2	5				FROM GRP20, ELM16 (BASIS BOARD)	P02		
			1	27	2	6				FROM GRP20, ELM16 (BASIS BOARD)	P02		
	2		1	35	3	1			U	WIRE FIELD			
	2		1	35	3	2			U	WIRE FIELD			
	2		1	35	3	3			U	WIRE FIELD			
	2		1	35	3	4			U	WIRE FIELD			
	2		1	35	3	5			U	WIRE FIELD			

* WILLI STUDER AG * S I G N A L W I R E L I S T * 89/07/20 * 9:25 * P A G E 54 *
* * TAPE TRANSPORT & AUDIO MCH * * 89/04/19 - 00 *

SIGNAL NAME	COLOR	MI	ASY	GRP	ELM	PNT	S	LV	TYPE	DESCRIPTION OF ELEMENT		REMARK	ELEMENT NR.
<<-- CONT.OF	2		1	35	3	6			U	WIRE FIELD			
+STABIN4	2		1	35	3	7			U	WIRE FIELD			
	2		1	35	3	8			U	WIRE FIELD			
			1	35	3	9				WIRE FIELD			
	2		1	35	3	10			U	WIRE FIELD			
			1	35	3	11				WIRE FIELD			
	2		1	35	3	12			U	WIRE FIELD			
	2		1	35	3	13			L	WIRE FIELD			
			1	35	3	14				WIRE FIELD			
	2		1	35	50	4			L	CONNECTOR TO VU METER PANEL	J04		
	2		1	35	50	5			L	CONNECTOR TO VU METER PANEL	J04		
	2		1	35	50	6			L	CONNECTOR TO VU METER PANEL	J04		
	2		1	35	51	4			L	CONN. TO VU METER PANEL EXTERNAL	J05		
	2		1	35	51	5			L	CONN. TO VU METER PANEL EXTERNAL	J05		
	2		1	35	51	6			L	CONN. TO VU METER PANEL EXTERNAL	J05		
	2		1	35	58	7			AX	FROM ASY07, GRP11, ELM01	P09		
	2		1	35	59	16			M	TO GRP20, ELM70	P10		
			6	4	1	1			Y	CONNECTOR POWER INPUT			
	2		6	17	1	4				CONNECTOR FROM ASS01, GRP35			
	4		6	17	1	5				CONNECTOR FROM ASS01, GRP35			
	1		6	17	1	6				CONNECTOR FROM ASS01, GRP35			
	4-2-1		6	17	3	1			Y	TO DC CONVERTER			
	2		7	10	4	2			J	FUSE	F04		51.01.0229
	2		7	11	1	7			BX		J02		54.25.0310
+VMOT			1	29	1	2			BX	FROM SP. M. DRIVE AMPL. RIGHT	J01		
			1	29	2	2			BX	TO SPOOLING MOTOR RIGHT	J02		
			1	29	3	2			BX	FROM SP. M. DRIVE AMPL. LEFT	J03		
			1	29	4	2			BX	TO SPOOLING MOTOR LEFT	J04		
			1	30	3	2			BX	OUTPUT (MOTOR RIGHT)	J01		
			1	30	4	1			BX	OUTPUT (MOTOR LEFT)	J02		
			1	33	3	2			BX	OUTPUT (MOTOR RIGHT)	J01		
			1	33	4	1			BX	OUTPUT (MOTOR LEFT)	J02		
	2		1	36	2	1			AX	FROM GRP33, ELM 03	P02		
	2		1	37	2	1			AX	FROM GRP30, ELM 03	P02		
+YSUP			1	20	43	12A				TAPE DECK PERIPHERY CONTR.	J04		1.820.762.00
+0.0			1	21	10	14				TO GRP24, ELM03	P05		
			1	21	11	14				TO GRP24, ELM02	P06		
			1	21	12	14				TO GRP24, ELM01	P07		
			1	22	10	14				TO GRP24, ELM03	P05		
			1	22	11	14				TO GRP24, ELM02	P06		
			1	22	12	14				TO GRP24, ELM01	P07		
+0.0SENS	0		1	20	61	5			L	WIRE FIELD (FROM GRP20, ELM70)			
	0		1	20	70	22			F	FROM GRP35, ELM59	J13		
			1	32	1	9				FROM DISTRIBUTION BOARD (ELM21)	P01		
+12.0			1	22	9	4			BX	POWER SUPPLY FLOPPY TD	J11		
			1	22	25	1A				FLOPPY DISK CONTROLLER	J10		1.820.726.00
			1	22	25	1B				FLOPPY DISK CONTROLLER	J10		1.820.726.00

```
*****************************************************************************************************************************
*    WILLI STUDER AG    *    S I G N A L     W I R E     L I S T                 * 89/07/20 *   9:25 *   P A G E  55   *
*****************************************************************************************************************************
*                          * TAPE TRANSPORT & AUDIO MCH *                        *  89/04/19 - 00                          *
*****************************************************************************************************************************

SIGNAL NAME   COLOR  MI  ASY GRP ELM PNT  S  LV  TYPE            DESCRIPTION OF ELEMENT                  REMARK     ELEMENT NR.
-----------   -----  --  ---------------  -  --  --------------  ------------------------------------  ---------  ---------------
+15.0                    1  20   1   5                          SPOOLING M. DRIVE AMP. LEFT        P01
                         1  20   2   5                          SPOOLING M. DRIVE AMP. RIGHT       P02
                         1  20   3   5                          CAPSTAN M. DRIVE AMPLIFIER         P03
                         1  20   4   5                          PAR. CONT. INT. SYNCHRONIZER       P04
                         1  20   6   5                          OPTO + EXTENDED SENSORS            P06
                         1  20   9   5                          TACHO SENSOR SPOOLING M. LEFT      P09
                         1  20  10   5                          TACHO SENSOR SPOOLING M. RIGHT     P10
                         1  20  11   5                          MOVE SENSOR                        P11
                         1  20  12   5                          TAPE TENSION SENSOR, LEFT          P12
                         1  20  13   5                          TAPE TENSION SENSOR, RIGHT         P13
                         1  20  14  14                          FUSE FAILURE DETECTOR              P14
                         1  20  17   5                          TO HEAD BLOCK ASSEMBLY             P17
                         1  20  18   5                          RESERVE                            P18
                         1  20  19   5                          MECHANICAL ELAPSED TIMER           P19
                         1  20  40  18                          SPOOLING MOTOR DRIVER              J01                1.820.759.00
                         1  20  41  18                          CAPSTAN CONTROL UNIT               J02                1.820.764.00
                         1  20  42  15A                         CAPSTAN INTERFACE                  J03                1.820.727.00
                         1  20  42  15B                         CAPSTAN INTERFACE                  J03                1.820.727.00
                         1  20  43  15A                         TAPE DECK PERIPHERY CONTR.         J04                1.820.762.00
                         1  20  43  15B                         TAPE DECK PERIPHERY CONTR.         J04                1.820.762.00
                         1  20  44  18                          TAPE DECK COUNTER / TIMER          J05                1.820.761.00
                         1  20  45  18                          SPOOLING MOTOR CONTROLLER          J06                1.820.822.00
                         1  20  46  18                          MP-UNIT TO CONTROL MCH             J07                1.820.781.00
                         1  20  47  18                          TAPE DECK SERIAL INTERFACE         J08                1.820.763.00
                         1  20  48  15A                         MASTER SERIAL INTERFACE            J09                1.820.753.00
                         1  20  48  15B                         MASTER SERIAL INTERFACE            J09                1.820.753.00
                         1  20  49  18                          MP-UNIT MASTER MCH                 J10                1.820.784.00
                         1  20  50  18                          SMPTE/EBU INTERFACE                J11                1.820.751.00
              2          1  20  61  10              L           WIRE FIELD (FROM GRP20, ELM70)
              2          1  20  70  11              F           FROM GRP35, ELM59                  J13
                         1  21   8   5              BX          FROM GRP35, ELM61                  J01
                         1  21  20  18                          COMMUNICATIONS CONTROLLER          J05                1.820.718.00
                         1  21  22  18                          GENERATOR UNIT MCH                 J07                1.820.725.00
                         1  21  50   5                          TO AUDIO RACK CH  1 TO  8          P10
                         1  21  51   5                          TO AUDIO RACK CH  9 TO 16          P11
                         1  21  52   5                          TO AUDIO RACK CH 17 TO 24          P12
                         1  22   8   5              BX          FROM GRP35, ELM61                  J01
                         1  22  20  18                          COMMUNICATIONS CONTROLLER          J05                1.820.718.00
                         1  22  22  18                          GENERATOR UNIT MCH                 J07                1.820.725.00
                         1  22  25   2A                         FLOPPY DISK CONTROLLER             J10                1.820.726.00
                         1  22  25   2B                         FLOPPY DISK CONTROLLER             J10                1.820.726.00
                         1  22  50   5                          TO AUDIO RACK CH  1 TO  8          P10
                         1  22  51   5                          TO AUDIO RACK CH  9 TO 16          P11
                         1  22  52   5                          TO AUDIO RACK CH 17 TO 24          P12
                         1  28   1   5                          FROM B. BOARD TAPE DECK, ELM 19    P01
                         1  28   2   5                          TO VU-METER PANEL                  P02
                         1  29   5   5                          FROM GRP20, ELM02 (BASIS B. TD)    P01
                         1  29   6   5                          TO SPOOLING M. DRIVE AMP. RIGHT    P02
                         1  30   2   5                          FROM GRP29, ELM06                  P01
                         1  31   1   5                          FROM DISTRIBUTION BOARD (ELM20)    P01
                         1  31   2   5              BX          DC OUTPUT (GRP35, ELM53)           P02
                         1  31   2   6              BX          DC OUTPUT (GRP35, ELM53)           P02
                         1  32   1   5                          FROM DISTRIBUTION BOARD (ELM21)    P01
                         1  33   2   5                          FROM GRP20, ELM01 (BASIS B. TD)    P01
              2          1  35  17   1              U           WIRE FIELD

*****************************************************************************************************************************
*    WILLI STUDER AG    *    S I G N A L     W I R E     L I S T                 * 89/07/20 *   9:25 *   P A G E  56   *
*****************************************************************************************************************************
*                          * TAPE TRANSPORT & AUDIO MCH *                        *  89/04/19 - 00                          *
*****************************************************************************************************************************

SIGNAL NAME   COLOR  MI  ASY GRP ELM PNT  S  LV  TYPE            DESCRIPTION OF ELEMENT                  REMARK     ELEMENT NR.
-----------   -----  --  ---------------  -  --  --------------  ------------------------------------  ---------  ---------------
<<-- CONT.OF  2          1  35  17   2              L           WIRE FIELD
+15.0         2          1  35  17   3              L           WIRE FIELD
              2          1  35  17   4              L           WIRE FIELD
                         1  35  17   5                          WIRE FIELD
                         1  35  17   6                          WIRE FIELD
                         1  35  17   7                          WIRE FIELD
                         1  35  17   8                          WIRE FIELD
                         1  35  17   9                          WIRE FIELD
                         1  35  20   5                          TO GRP31, ELM01                    P01
                         1  35  21   5                          TO GRP32, ELM01                    P02
                         1  35  22   5              BX          AUDIO RACK CH  1 TO  8             J01
                         1  35  23   5              BX          AUDIO RACK CH  9 TO 16             J02
                         1  35  24   5              BX          AUDIO RACK CH 17 TO 24             J03
              2          1  35  53   5              AX          FROM GRP31, ELM02                  P04
              2          1  35  53   6              AX          FROM GRP31, ELM02                  P04
              2          1  35  59  11              M           TO GRP20, ELM70                    P10
              2          1  35  61   5              AX          TO GRP21, ELM08                    P12
                         1  36   1   5                          TACHO SENSOR                       P01                1.820.771.00
                         1  37   1   5                          TACHO SENSOR                       P01                1.820.771.00
                         1  38   1   6              F           FROM GRP39, ELM02                  J01
                         1  39   1   5                          FROM GRP20, ELM03 (BASIS B. TD)    P01
                         1  39   2   6              M           TO GRP38, ELM01 (CAPSTAN MOTOR)    P02
                         1  42   1   5                          FROM GRP20, ELM12 (BASIS B. TD)    P01
                         1  43   1   5                          FROM GRP20, ELM13 (BASIS B. TD)    P01
                         1  44   1   5                          FROM GRP20, ELM06                  P01
                         1  45   1   5                          FROM GRP20, ELM11                  P01
                         1  59   1  14                          FROM GRP20, ELM14 (BASIS B. TD)    P01
                         1  60   2   5                          FROM GR. 20 ELM 1L                 P02
                         1  60   3   5                          FROM GR. 20 ELM 10                 P03
                         1  60   4   5                          FROM GR. 20 ELM 09                 P04
                         1  60   6   5                          TO MOVE SENSOR                     P06
                         1  60   7   5                          TO TACHO SENSOR SP. MOTOR RIGHT    P07
                         1  60   8   5                          TO TACHO SENSOR SP. MOTOR LEFT     P08
                         2   1   7   3                          REPRODUCE HEAD, CH 01 TO 08        P07
                         2   1   8   3                          REPRODUCE HEAD, CH 09 TO 16        P08
                         2   1   9   3                          REPRODUCE HEAD, CH 17 TO 24        P09
                         2   1  10   3                          HEAD BLOCK IDENTIFIER              P10                1.820.795.00
                         2   2   1   3                          INPUT                              J01
                         2   2   2   3                          OUTPUT                             P01
                         2   3   1   3                          INPUT                              J01
                         2   3   2   3                          OUTPUT                             P01
                         2   4   1   3                          INPUT                              J01
                         2   4   2   3                          OUTPUT                             P01
                         3   1   1  22                          LINE AMPLIFIER, CH 1               J01                1.820.715.00
                         3   1   2  15A                         CONTROLLER INTERNAL NRS CH 1       J02                1.820.815.00
                         3   1   2  15B                         CONTROLLER INTERNAL NRS CH 1       J02                1.820.815.00
                         3   1   3  22                          REPRODUCE AMPLIFIER, CH 1          J03                1.820.710.00
                         3   1   4  22                          RECORD AMPLIFIER, CH 1             J04                1.820.811.00
                         3   1   5  22                          HF-DRIVER, CH 1                    J05                1.820.813.00
                         3   1   6  22                          LINE AMPLIFIER, CH 2               J06                1.820.715.00
                         3   1   7  15A                         CONTROLLER INTERNAL NRS CH 2       J07                1.820.815.00
                         3   1   7  15B                         CONTROLLER INTERNAL NRS CH 2       J07                1.820.815.00
                         3   1   8  22                          REPRODUCE AMPLIFIER, CH 2          J08                1.820.710.00
                         3   1   9  22                          RECORD AMPLIFIER, CH 2             J09                1.820.811.00
```

WILLI STUDER AG	S I G N A L W I R E L I S T	89/07/20	9:25	P A G E 57
	* TAPE TRANSPORT & AUDIO MCH *	89/04/19 - 00		

SIGNAL NAME	COLOR	MI	ASY	GRP	ELM	PNT	S	LV	TYPE	DESCRIPTION OF ELEMENT		REMARK	ELEMENT NR.
<<-- CONT.OF			3	1	10	22				HF-DRIVER, CH 2	J10		1.820.813.00
+15.0			3	1	11	22				LINE AMPLIFIER, CH 3	J11		1.820.715.00
			3	1	12	15A				CONTROLLER INTERNAL NRS CH 3	J12		1.820.815.00
			3	1	12	15B				CONTROLLER INTERNAL NRS CH 3	J12		1.820.815.00
			3	1	13	22				REPRODUCE AMPLIFIER, CH 3	J13		1.820.710.00
			3	1	14	22				RECORD AMPLIFIER, CH 3	J14		1.820.811.00
			3	1	15	22				HF-DRIVER, CH 3	J15		1.820.813.00
			3	1	16	22				LINE AMPLIFIER, CH 4	J16		1.820.715.00
			3	1	17	15A				CONTROLLER INTERNAL NRS CH 4	J17		1.820.815.00
			3	1	17	15B				CONTROLLER INTERNAL NRS CH 4	J17		1.820.815.00
			3	1	18	22				REPRODUCE AMPLIFIER, CH 4	J18		1.820.710.00
			3	1	19	22				RECORD AMPLIFIER, CH 4	J19		1.820.811.00
			3	1	20	22				HF-DRIVER, CH 4	J20		1.820.813.00
			3	1	21	15A				BUS CONVERTER	J21		1.820.717.00
			3	1	21	15B				BUS CONVERTER	J21		1.820.717.00
			3	1	70	5					P01		
			3	2	1	22				LINE AMPLIFIER, CH 5	J01		1.820.715.00
			3	2	2	15A				CONTROLLER INTERNAL NRS CH 5	J02		1.820.815.00
			3	2	2	15B				CONTROLLER INTERNAL NRS CH 5	J02		1.820.815.00
			3	2	3	22				REPRODUCE AMPLIFIER, CH 5	J03		1.820.710.00
			3	2	4	22				RECORD AMPLIFIER, CH 5	J04		1.820.811.00
			3	2	5	22				HF-DRIVER, CH 5	J05		1.820.813.00
			3	2	6	22				LINE AMPLIFIER, CH 6	J06		1.820.715.00
			3	2	7	15A				CONTROLLER INTERNAL NRS CH 6	J07		1.820.815.00
			3	2	7	15B				CONTROLLER INTERNAL NRS CH 6	J07		1.820.815.00
			3	2	8	22				REPRODUCE AMPLIFIER, CH 6	J08		1.820.710.00
			3	2	9	22				RECORD AMPLIFIER, CH 6	J09		1.820.811.00
			3	2	10	22				HF-DRIVER, CH 6	J10		1.820.813.00
			3	2	11	22				LINE AMPLIFIER, CH 7	J11		1.820.715.00
			3	2	12	15A				CONTROLLER INTERNAL NRS CH 7	J12		1.820.815.00
			3	2	12	15B				CONTROLLER INTERNAL NRS CH 7	J12		1.820.815.00
			3	2	13	22				REPRODUCE AMPLIFIER, CH 7	J13		1.820.710.00
			3	2	14	22				RECORD AMPLIFIER, CH 7	J14		1.820.811.00
			3	2	15	22				HF-DRIVER, CH 7	J15		1.820.813.00
			3	2	16	22				LINE AMPLIFIER, CH 8	J16		1.820.715.00
			3	2	17	15A				CONTROLLER INTERNAL NRS CH 8	J17		1.820.815.00
			3	2	17	15B				CONTROLLER INTERNAL NRS CH 8	J17		1.820.815.00
			3	2	18	22				REPRODUCE AMPLIFIER, CH 8	J18		1.820.710.00
			3	2	19	22				RECORD AMPLIFIER, CH 8	J19		1.820.811.00
			3	2	20	22				HF-DRIVER, CH 8	J20		1.820.813.00
			3	2	21	15A				BUS CONVERTER	J21		1.820.717.00
			3	2	21	15B				BUS CONVERTER	J21		1.820.717.00
			3	2	70	5					P01		
			3	3	1	4				SUPPLY PREAMPLIFIER CH 1 TO 8	J01		
			3	3	2	5			BX	SUPPLY ASY03, GRP01	J02		
			3	3	2	6			BX	SUPPLY ASY03, GRP01	J02		
			3	3	3	5			BX	SUPPLY ASY03, GRP02	J03		
			3	3	3	6			BX	SUPPLY ASY03, GRP02	J03		
			3	3	4	5			BX	SUPPLY CONNECTOR	J04		
			3	3	5	5			BX	SUPPLY ASY03, GRP04 (NRS OPTION)	J05		
			3	3	5	6			BX	SUPPLY ASY03, GRP04 (NRS OPTION)	J05		
			3	4	10	5			AX	TO GRP03, ELM05	P10		
			3	4	10	6			AX	TO GRP03, ELM05	P10		
			4	1	1	22				LINE AMPLIFIER, CH 9	J01		1.820.715.00

WILLI STUDER AG	S I G N A L W I R E L I S T	89/07/20	9:25	P A G E 58
	* TAPE TRANSPORT & AUDIO MCH *	89/04/19 - 00		

SIGNAL NAME	COLOR	MI	ASY	GRP	ELM	PNT	S	LV	TYPE	DESCRIPTION OF ELEMENT		REMARK	ELEMENT NR.
<<-- CONT.OF			4	1	2	15A				CONTROLLER INTERNAL NRS CH 9	J02		1.820.815.00
+15.0			4	1	2	15B				CONTROLLER INTERNAL NRS CH 9	J02		1.820.815.00
			4	1	3	22				REPRODUCE AMPLIFIER, CH 9	J03		1.820.710.00
			4	1	4	22				RECORD AMPLIFIER, CH 9	J04		1.820.811.00
			4	1	5	22				HF-DRIVER, CH 9	J05		1.820.813.00
			4	1	6	22				LINE AMPLIFIER, CH10	J06		1.820.715.00
			4	1	7	15A				CONTROLLER INTERNAL NRS CH10	J07		1.820.815.00
			4	1	7	15B				CONTROLLER INTERNAL NRS CH10	J07		1.820.815.00
			4	1	8	22				REPRODUCE AMPLIFIER, CH10	J08		1.820.710.00
			4	1	9	22				RECORD AMPLIFIER, CH10	J09		1.820.811.00
			4	1	10	22				HF-DRIVER, CH10	J10		1.820.813.00
			4	1	11	22				LINE AMPLIFIER, CH11	J11		1.820.715.00
			4	1	12	15A				CONTROLLER INTERNAL NRS CH11	J12		1.820.815.00
			4	1	12	15B				CONTROLLER INTERNAL NRS CH11	J12		1.820.815.00
			4	1	13	22				REPRODUCE AMPLIFIER, CH11	J13		1.820.710.00
			4	1	14	22				RECORD AMPLIFIER, CH11	J14		1.820.811.00
			4	1	15	22				HF-DRIVER, CH11	J15		1.820.813.00
			4	1	16	22				LINE AMPLIFIER, CH12	J16		1.820.715.00
			4	1	17	15A				CONTROLLER INTERNAL NRS CH12	J17		1.820.815.00
			4	1	17	15B				CONTROLLER INTERNAL NRS CH12	J17		1.820.815.00
			4	1	18	22				REPRODUCE AMPLIFIER, CH12	J18		1.820.710.00
			4	1	19	22				RECORD AMPLIFIER, CH12	J19		1.820.811.00
			4	1	20	22				HF-DRIVER, CH12	J20		1.820.813.00
			4	1	21	15A				BUS CONVERTER	J21		1.820.717.00
			4	1	21	15B				BUS CONVERTER	J21		1.820.717.00
			4	1	70	5					P01		
			4	2	1	22				LINE AMPLIFIER, CH13	J01		1.820.715.00
			4	2	2	15A				CONTROLLER INTERNAL NRS CH13	J02		1.820.815.00
			4	2	2	15B				CONTROLLER INTERNAL NRS CH13	J02		1.820.815.00
			4	2	3	22				REPRODUCE AMPLIFIER, CH13	J03		1.820.710.00
			4	2	4	22				RECORD AMPLIFIER, CH13	J04		1.820.811.00
			4	2	5	22				HF-DRIVER, CH13	J05		1.820.813.00
			4	2	6	22				LINE AMPLIFIER, CH14	J06		1.820.715.00
			4	2	7	15A				CONTROLLER INTERNAL NRS CH14	J07		1.820.815.00
			4	2	7	15B				CONTROLLER INTERNAL NRS CH14	J07		1.820.815.00
			4	2	8	22				REPRODUCE AMPLIFIER, CH14	J08		1.820.710.00
			4	2	9	22				RECORD AMPLIFIER, CH14	J09		1.820.811.00
			4	2	10	22				HF-DRIVER, CH14	J10		1.820.813.00
			4	2	11	22				LINE AMPLIFIER, CH15	J11		1.820.715.00
			4	2	12	15A				CONTROLLER INTERNAL NRS CH15	J12		1.820.815.00
			4	2	12	15B				CONTROLLER INTERNAL NRS CH15	J12		1.820.815.00
			4	2	13	22				REPRODUCE AMPLIFIER, CH15	J13		1.820.710.00
			4	2	14	22				RECORD AMPLIFIER, CH15	J14		1.820.811.00
			4	2	15	22				HF-DRIVER, CH15	J15		1.820.813.00
			4	2	16	22				LINE AMPLIFIER, CH16	J16		1.820.715.00
			4	2	17	15A				CONTROLLER INTERNAL NRS CH16	J17		1.820.815.00
			4	2	17	15B				CONTROLLER INTERNAL NRS CH16	J17		1.820.815.00
			4	2	18	22				REPRODUCE AMPLIFIER, CH16	J18		1.820.710.00
			4	2	19	22				RECORD AMPLIFIER, CH16	J19		1.820.811.00
			4	2	20	22				HF-DRIVER, CH16	J20		1.820.813.00
			4	2	21	15A				BUS CONVERTER	J21		1.820.717.00
			4	2	21	15B				BUS CONVERTER	J21		1.820.717.00
			4	2	70	5					P01		
			4	3	1	4				SUPPLY PREAMPLIFIER CH17 TO 24	J01		

```
*    WILLI STUDER AG   *    S I G N A L    W I R E    L I S T              * 89/07/20 *  9:25 *  P A G E  59   *
*                      * TAPE TRANSPORT & AUDIO MCH *                        * 89/04/19 - 00                      *
```

SIGNAL NAME	COLOR	MI	ASY	GRP	ELM	PNT	S	LV	TYPE	DESCRIPTION OF ELEMENT		REMARK	ELEMENT NR.
<<-- CONT.OF			4	3	2	5			BX	SUPPLY ASY04, GRP01	J02		
+15.0			4	3	2	6			BX	SUPPLY ASY04, GRP01	J02		
			4	3	3	5			BX	SUPPLY ASY04, GRP02	J03		
			4	3	3	6			BX	SUPPLY ASY04, GRP02	J03		
			4	3	4	5			BX	SUPPLY CONNECTOR	J04		
			4	3	5	5			BX	SUPPLY ASY04, GRP04 (NRS OPTION)	J05		
			4	3	5	6			BX	SUPPLY ASY04, GRP04 (NRS OPTION)	J05		
			4	4	19	5			AX	FROM GRP03, ELM05 (DISTR. B)	P09		
			4	4	19	6			AX	FROM GRP03, ELM05 (DISTR. B)	P09		
			5	1	1	22				LINE AMPLIFIER, CH17	J01		1.820.715.00
			5	1	2	15A				CONTROLLER INTERNAL NRS CH17	J02		1.820.815.00
			5	1	2	15B				CONTROLLER INTERNAL NRS CH17	J02		1.820.815.00
			5	1	3	22				REPRODUCE AMPLIFIER, CH17	J03		1.820.710.00
			5	1	4	22				RECORD AMPLIFIER, CH17	J04		1.820.811.00
			5	1	5	22				HF-DRIVER, CH17	J05		1.820.813.00
			5	1	6	22				LINE AMPLIFIER, CH18	J06		1.820.715.00
			5	1	7	15A				CONTROLLER INTERNAL NRS CH18	J07		1.820.815.00
			5	1	7	15B				CONTROLLER INTERNAL NRS CH18	J07		1.820.815.00
			5	1	8	22				REPRODUCE AMPLIFIER, CH18	J08		1.820.710.00
			5	1	9	22				RECORD AMPLIFIER, CH18	J09		1.820.811.00
			5	1	10	22				HF-DRIVER, CH18	J10		1.820.813.00
			5	1	11	22				LINE AMPLIFIER, CH19	J11		1.820.715.00
			5	1	12	15A				CONTROLLER INTERNAL NRS CH19	J12		1.820.815.00
			5	1	12	15B				CONTROLLER INTERNAL NRS CH19	J12		1.820.815.00
			5	1	13	22				REPRODUCE AMPLIFIER, CH19	J13		1.820.710.00
			5	1	14	22				RECORD AMPLIFIER, CH19	J14		1.820.811.00
			5	1	15	22				HF-DRIVER, CH19	J15		1.820.813.00
			5	1	16	22				LINE AMPLIFIER, CH20	J16		1.820.715.00
			5	1	17	15A				CONTROLLER INTERNAL NRS CH20	J17		1.820.815.00
			5	1	17	15B				CONTROLLER INTERNAL NRS CH20	J17		1.820.815.00
			5	1	18	22				REPRODUCE AMPLIFIER, CH20	J18		1.820.710.00
			5	1	19	22				RECORD AMPLIFIER, CH20	J19		1.820.811.00
			5	1	20	22				HF-DRIVER, CH20	J20		1.820.813.00
			5	1	21	15A				BUS CONVERTER	J21		1.820.717.00
			5	1	21	15B				BUS CONVERTER	J21		1.820.717.00
			5	1	70	5					P01		
			5	2	1	22				LINE AMPLIFIER, CH21	J01		1.820.715.00
			5	2	2	15A				CONTROLLER INTERNAL NRS CH21	J02		1.820.815.00
			5	2	2	15B				CONTROLLER INTERNAL NRS CH21	J02		1.820.815.00
			5	2	3	22				REPRODUCE AMPLIFIER, CH21	J03		1.820.710.00
			5	2	4	22				RECORD AMPLIFIER, CH21	J04		1.820.811.00
			5	2	5	22				HF-DRIVER, CH21	J05		1.820.813.00
			5	2	6	22				LINE AMPLIFIER, CH22	J06		1.820.715.00
			5	2	7	15A				CONTROLLER INTERNAL NRS CH22	J07		1.820.815.00
			5	2	7	15B				CONTROLLER INTERNAL NRS CH22	J07		1.820.815.00
			5	2	8	22				REPRODUCE AMPLIFIER, CH22	J08		1.820.710.00
			5	2	9	22				RECORD AMPLIFIER, CH22	J09		1.820.811.00
			5	2	10	22				HF-DRIVER, CH22	J10		1.820.813.00
			5	2	11	22				LINE AMPLIFIER, CH23	J11		1.820.715.00
			5	2	12	15A				CONTROLLER INTERNAL NRS CH23	J12		1.820.815.00
			5	2	12	15B				CONTROLLER INTERNAL NRS CH23	J12		1.820.815.00
			5	2	13	22				REPRODUCE AMPLIFIER, CH23	J13		1.820.710.00
			5	2	14	22				RECORD AMPLIFIER, CH23	J14		1.820.811.00
			5	2	15	22				HF-DRIVER, CH23	J15		1.820.813.00

```
*    WILLI STUDER AG   *    S I G N A L    W I R E    L I S T              * 89/07/20 *  9:25 *  P A G E  60   *
*                      * TAPE TRANSPORT & AUDIO MCH *                        * 89/04/19 - 00                      *
```

SIGNAL NAME	COLOR	MI	ASY	GRP	ELM	PNT	S	LV	TYPE	DESCRIPTION OF ELEMENT		REMARK	ELEMENT NR.
<<-- CONT.OF			5	2	16	22				LINE AMPLIFIER, CH24	J16		1.820.715.00
+15.0			5	2	17	15A				CONTROLLER INTERNAL NRS CH24	J17		1.820.815.00
			5	2	17	15B				CONTROLLER INTERNAL NRS CH24	J17		1.820.815.00
			5	2	18	22				REPRODUCE AMPLIFIER, CH24	J18		1.820.710.00
			5	2	19	22				RECORD AMPLIFIER, CH24	J19		1.820.811.00
			5	2	20	22				HF-DRIVER, CH24	J20		1.820.813.00
			5	2	21	15A				BUS CONVERTER	J21		1.820.717.00
			5	2	21	15B				BUS CONVERTER	J21		1.820.717.00
			5	2	70	5					P01		
			5	3	1	4				SUPPLY PREAMPLIFIER CH 9 TO 16	J01		
			5	3	2	5			BX	SUPPLY ASY05, GRP01	J02		
			5	3	2	6			BX	SUPPLY ASY05, GRP01	J02		
			5	3	3	5			BX	SUPPLY ASY05, GRP02	J03		
			5	3	3	6			BX	SUPPLY ASY05, GRP02	J03		
			5	3	4	5			BX	SUPPLY CONNECTOR	J04		
			5	3	5	5			BX	SUPPLY ASY05, GRP04 (NRS OPTION)	J05		
			5	3	5	6			BX	SUPPLY ASY05, GRP04 (NRS OPTION)	J05		
			5	4	19	5			AX	FROM GRP03, ELM05 (DISTR. B)	P09		
			5	4	19	6			AX	FROM GRP03, ELM05 (DISTR. B)	P09		
			6	1	1	18				CONNECTOR MPU VU PANEL MCH	J01		
			6	1	2	18				SERVICE BOARD	J02		
			6	2	1	18					P01		
			6	3	1	18					P01		
+15.0T	2		1	28	3	1				TO MECHANICAL TIMER	P03		
+24.0			1	20	14	4				FUSE FAILURE DETECTOR	P14		
			1	20	15	5				DISPLAY DRIVER	P15		
			1	20	15	6				DISPLAY DRIVER	P15		
			1	20	17	24				TO HEAD BLOCK ASSEMBLY	P17		
			1	20	18	24				RESERVE	P18		
	7		1	20	62	11			U	WIRE FIELD			
	7		1	20	62	12			U	WIRE FIELD			
	7		1	20	62	13			U	WIRE FIELD			
	7		1	20	70	15			F	FROM GRP35, ELM59	J13		
	7		1	20	72	1			F	TO BRAKE SOLENOID, LEFT	P25		
	7		1	20	73	1			F	TO BRAKE SOLENOID, RIGHT	P26		
			1	21	10	12				TO GRP24, ELM03	P05		
			1	21	11	12				TO GRP24, ELM02	P06		
			1	21	12	12				TO GRP24, ELM01	P07		
			1	22	10	12				TO GRP24, ELM03	P05		
			1	22	11	12				TO GRP24, ELM02	P06		
			1	22	12	12				TO GRP24, ELM01	P07		
			1	24	1	14				NRS CONTROL CONN. CH 17 TO 24			
			1	24	2	14				NRS CONTROL CONN. CH 9 TO 16			
			1	24	3	14				NRS CONTROL CONN. CH 1 TO 8			
			1	32	2	2			BX	DC OUTPUT (GRP35, ELM55)	P02		
	7		1	35	4	1			U	WIRE FIELD			
	7		1	35	4	2			L	WIRE FIELD			
			1	35	4	3				WIRE FIELD			
	7		1	35	4	4			L	WIRE FIELD			
	7		1	35	55	2			AX	FROM GRP32, ELM02	P06		
	7		1	35	59	15			M	TO GRP20, ELM70	P10		
	7		1	40	1	1			M	BRAKE SOLENOID			

WILLI STUDER AG * SIGNAL WIRE LIST * 89/07/20 * 9:25 * PAGE 61

* TAPE TRANSPORT & AUDIO MCH * * 89/04/19 - 00

SIGNAL NAME	COLOR	MI	ASY	GRP	ELM	PNT	S	LV	TYPE	DESCRIPTION OF ELEMENT		REMARK	ELEMENT NR.
<<-- CONT.OF	7		1	41	1	1			M	BRAKE SOLENOID			
+24.0			1	50	1	5				FROM GRP20, ELM15 (BASIS B. TD)	P01		
			1	50	1	6				FROM GRP20, ELM15 (BASIS B. TD)	P01		
			1	59	1	4				FROM GRP20, ELM14 (BASIS B. TD)	P01		
			2	1	10	25				HEAD BLOCK IDENTIFIER	P10		1.820.795.00
+24.0L			1	48	1	5				FROM GRP50, ELM03 (DISPLAY DRIVER)			
			1	48	3	1				WIRE FIELD			
			1	48	3	2				WIRE FIELD			
			1	50	3	5				CONNECTOR COMMAND UNIT	P02		
+24.0NRS			1	21	8	10			BX	FROM GRP35, ELM61	J01		
			1	22	8	10			BX	FROM GRP35, ELM61	J01		
			1	31	2	8			BX	DC OUTPUT (GRP35, ELM53)	P02		
	7		1	35	15	1			L	WIRE FIELD			
			1	35	15	2				WIRE FIELD			
			1	35	15	3				WIRE FIELD			
			1	35	15	4				WIRE FIELD			
			1	35	15	5				WIRE FIELD			
			1	35	15	6				WIRE FIELD			
			1	35	22	10			BX	AUDIO RACK CH 1 TO 8	J01		
			1	35	23	10			BX	AUDIO RACK CH 9 TO 16	J02		
			1	35	24	10			BX	AUDIO RACK CH 17 TO 24	J03		
	7		1	35	53	8			AX	FROM GRP31, ELM02	P04		
	7		1	35	61	10			AX	TO GRP21, ELM08	P12		
			3	3	2	10			BX	SUPPLY ASY03, GRP01	J02		
			3	3	3	10			BX	SUPPLY ASY03, GRP02	J03		
			3	3	4	10			BX	SUPPLY CONNECTOR	J04		
			3	3	5	10			BX	SUPPLY ASY03, GRP04 (NRS OPTION)	J05		
			3	4	1	15				NOISE REDUCTION UNIT CH 1	J11		
	7		3	4	10	10			AX	TO GRP03, ELM05	P10		
			4	3	2	10			BX	SUPPLY ASY04, GRP01	J02		
			4	3	3	10			BX	SUPPLY ASY04, GRP02	J03		
			4	3	4	10			BX	SUPPLY CONNECTOR	J04		
			4	3	5	10			BX	SUPPLY ASY04, GRP04 (NRS OPTION)	J05		
			4	4	1	15				NOISE REDUCTION UNIT CH 9	J01		
			4	4	19	10			AX	FROM GRP03, ELM05 (DISTR. B)	P09		
			5	3	2	10			BX	SUPPLY ASY05, GRP01	J02		
			5	3	3	10			BX	SUPPLY ASY05, GRP02	J03		
			5	3	4	10			BX	SUPPLY CONNECTOR	J04		
			5	3	5	10			BX	SUPPLY ASY05, GRP04 (NRS OPTION)	J05		
			5	4	1	15				NOISE REDUCTION UNIT CH17	J01		
			5	4	19	10			AX	FROM GRP03, ELM05 (DISTR. B)	P09		
+24.0REM			1	23	8	25			B	CONN. PARALLEL REMOTE CONTROL	J07		
			1	25	2	25			B	CONNECTOR SYNCHRONIZER CONTROL	J02		
			1	25	3	25			B	CONN. PARALLEL REMOTE CONTROL	J03		
			1	27	3	24				TO GRP25, ELM02 (SYNCHRONIZER)	P03		
			1	27	4	24				TO CONN. PARALLEL REMOTE CONTR.	P04		
+26.0			1	20	7	5				TAPE LIFT MOTOR, LEFT	P07		
			1	20	8	5				TAPE LIFT MOTOR, RIGHT	P08		
			1	20	14	15				FUSE FAILURE DETECTOR	P14		
	1		1	20	61	2			L	WIRE FIELD (FROM GRP20, ELM70)			

WILLI STUDER AG * SIGNAL WIRE LIST * 89/07/20 * 9:25 * PAGE 62

* TAPE TRANSPORT & AUDIO MCH * * 89/04/19 - 00

SIGNAL NAME	COLOR	MI	ASY	GRP	ELM	PNT	S	LV	TYPE	DESCRIPTION OF ELEMENT		REMARK	ELEMENT NR.
<<-- CONT.OF	1		1	20	70	20			F	FROM GRP35, ELM59	J13		
+26.0			1	32	2	5			BX	DC OUTPUT (GRP35, ELM55)	P02		
	1		1	35	5	1			U	WIRE FIELD			
	1		1	35	5	2			L	WIRE FIELD			
			1	35	5	3				WIRE FIELD			
			1	35	5	4				WIRE FIELD			
	1		1	35	55	5			AX	FROM GRP32, ELM02	P06		
	1		1	35	59	20			M	TO GRP20, ELM70	P10		
			1	46	1	5				FROM GRP20, ELM07	P01		
			1	47	1	5				FROM GRP20, ELM08 (BASIS B. TD)	P01		
			1	59	1	15				FROM GRP20, ELM14 (BASIS B. TD)	P01		
			1	60	1	5				FROM GR. 20 ELM 08	P01		
			1	60	5	5				TO TAPE LIFT MOTOR, RIGHT	P05		
+5.6SENS	4		1	20	62	3			L	WIRE FIELD			
	4		1	20	70	3			F	FROM GRP35, ELM59	J13		
			1	32	1	10				FROM DISTRIBUTION BOARD (ELM21)	P01		
-VMOT			1	29	1	1			BX	FROM SP. M. DRIVE AMPL. RIGHT	J01		
			1	29	2	1			BX	TO SPOOLING MOTOR RIGHT	J02		
			1	29	3	1			BX	FROM SP. M. DRIVE AMPL. LEFT	J03		
			1	29	4	1			BX	TO SPOOLING MOTOR LEFT	J04		
			1	30	3	1			BX	OUTPUT (MOTOR RIGHT)	J01		
			1	30	4	2			BX	OUTPUT (MOTOR LEFT)	J02		
			1	33	3	1			BX	OUTPUT (MOTOR RIGHT)	J01		
			1	33	4	2			BX	OUTPUT (MOTOR LEFT)	J02		
	0		1	36	2	2			AX	FROM GRP33, ELM 03	P02		
	0		1	37	2	2			AX	FROM GRP30, ELM 03	P02		
-YSUP			1	20	43	11A				TAPE DECK PERIPHERY CONTR.	J04		1.820.762.00
-15.0			1	20	1	6				SPOOLING M. DRIVE AMP. LEFT	P01		
			1	20	2	6				SPOOLING M. DRIVE AMP. RIGHT	P02		
			1	20	3	6				CAPSTAN M. DRIVE AMPLIFIER	P03		
			1	20	4	6				PAR. CONT. INT. SYNCHRONIZER	P04		
			1	20	6	6				OPTO + EXTENDED SENSORS	P06		
			1	20	9	6				TACHO SENSOR SPOOLING M. LEFT	P09		
			1	20	10	6				TACHO SENSOR SPOOLING M. RIGHT	P10		
			1	20	11	6				MOVE SENSOR	P11		
			1	20	12	6				TAPE TENSION SENSOR, LEFT	P12		
			1	20	13	6				TAPE TENSION SENSOR, RIGHT	P13		
			1	20	14	13				FUSE FAILURE DETECTOR	P14		
			1	20	17	6				TO HEAD BLOCK ASSEMBLY	P17		
			1	20	18	6				RESERVE	P18		
			1	20	19	6				MECHANICAL ELAPSED TIMER	P19		
			1	20	40	22				SPOOLING MOTOR DRIVER	J01		1.820.759.00
			1	20	41	22				CAPSTAN CONTROL UNIT	J02		1.820.764.00
			1	20	42	18A				CAPSTAN INTERFACE	J03		1.820.727.00
			1	20	42	18B				CAPSTAN INTERFACE	J03		1.820.727.00
			1	20	43	18A				TAPE DECK PERIPHERY CONTR.	J04		1.820.762.00
			1	20	43	18B				TAPE DECK PERIPHERY CONTR.	J04		1.820.762.00
			1	20	44	22				TAPE DECK COUNTER / TIMER	J05		1.820.761.00
			1	20	45	22				SPOOLING MOTOR CONTROLLER	J06		1.820.822.00
			1	20	47	22				TAPE DECK SERIAL INTERFACE	J08		1.820.763.00

WILLI STUDER AG * SIGNAL WIRE LIST * 89/07/20 * 9:25 * PAGE 63
* TAPE TRANSPORT & AUDIO MCH * * 89/04/19 - 00

SIGNAL NAME	COLOR	MI	ASY	GRP	ELM	PNT	S	LV	TYPE	DESCRIPTION OF ELEMENT		REMARK	ELEMENT NR.
<<-- CONT.OF			1	20	48	18A				MASTER SERIAL INTERFACE	J09		1.820.753.00
-15.0			1	20	48	18B				MASTER SERIAL INTERFACE	J09		1.820.753.00
			1	20	50	22				SMPTE/EBU INTERFACE	J11		1.820.751.00
	6		1	20	61	9			L	WIRE FIELD (FROM GRP20, ELM70)			
	6		1	20	70	12			F	FROM GRP35, ELM59	J13		
			1	21	8	7			BX	FROM GRP35, ELM61	J01		
			1	21	20	22				COMMUNICATIONS CONTROLLER	J05		1.820.718.00
			1	21	22	22				GENERATOR UNIT MCH	J07		1.820.725.00
			1	21	50	6				TO AUDIO RACK CH 1 TO 8	P10		
			1	21	51	6				TO AUDIO RACK CH 9 TO 16	P11		
			1	21	52	6				TO AUDIO RACK CH 17 TO 24	P12		
			1	22	8	7			BX	FROM GRP35, ELM61	J01		
			1	22	20	22				COMMUNICATIONS CONTROLLER	J05		1.820.718.00
			1	22	22	22				GENERATOR UNIT MCH	J07		1.820.725.00
			1	22	50	6				TO AUDIO RACK CH 1 TO 8	P10		
			1	22	51	6				TO AUDIO RACK CH 9 TO 16	P11		
			1	22	52	6				TO AUDIO RACK CH 17 TO 24	P12		
			1	28	1	6				FROM B. BOARD TAPE DECK, ELM 19	P01		
			1	28	2	6				TO VU-METER PANEL	P02		
			1	29	5	6				FROM GRP20, ELM02 (BASIS B. TD)	P01		
			1	29	6	6				TO SPOOLING M. DRIVE AMP. RIGHT	P02		
			1	30	2	6				FROM GRP29, ELM06	P01		
			1	31	1	6				FROM DISTRIBUTION BOARD (ELM20)	P01		
			1	31	2	1			BX	DC OUTPUT (GRP35, ELM53)	P02		
			1	31	2	2			BX	DC OUTPUT (GRP35, ELM53)	P02		
			1	32	1	6				FROM DISTRIBUTION BOARD (ELM21)	P01		
			1	33	2	6				FROM GRP20, ELM01 (BASIS B. TD)	P01		
	6		1	35	16	1			U	WIRE FIELD			
	6		1	35	16	2			L	WIRE FIELD			
	6		1	35	16	3			L	WIRE FIELD			
	6		1	35	16	4			L	WIRE FIELD			
			1	35	16	5				WIRE FIELD			
			1	35	16	6				WIRE FIELD			
			1	35	16	7				WIRE FIELD			
			1	35	16	8				WIRE FIELD			
			1	35	16	9				WIRE FIELD			
			1	35	20	6				TO GRP31, ELM01	P01		
			1	35	21	6				TO GRP32, ELM01	P02		
			1	35	22	7			BX	AUDIO RACK CH 1 TO 8	J01		
			1	35	23	7			BX	AUDIO RACK CH 9 TO 16	J02		
			1	35	24	7			BX	AUDIO RACK CH 17 TO 24	J03		
	6		1	35	53	1			AX	FROM GRP31, ELM02	P04		
	6		1	35	53	2			AX	FROM GRP31, ELM02	P04		
	6		1	35	59	12			M	TO GRP20, ELM70	P10		
	6		1	35	61	7			AX	TO GRP21, ELM08	P12		
			1	36	1	6				TACHO SENSOR	P01		1.820.771.00
			1	37	1	6				TACHO SENSOR	P01		1.820.771.00
			1	39	1	6				FROM GRP20, ELM03 (BASIS B. TD)	P01		
			1	39	2	5			M	TO GRP38, ELM01 (CAPSTAN MOTOR)	P02		
			1	42	1	6				FROM GRP20, ELM12 (BASIS B. TD)	P01		
			1	43	1	6				FROM GRP20, ELM13 (BASIS B. TD)	P01		
			1	44	1	6				FROM GRP20, ELM06	P01		
			1	45	1	6				FROM GRP20, ELM11	P01		
			1	59	1	13				FROM GRP20, ELM14 (BASIS B. TD)	P01		

WILLI STUDER AG * SIGNAL WIRE LIST * 89/07/20 * 9:25 * PAGE 64
* TAPE TRANSPORT & AUDIO MCH * * 89/04/19 - 00

SIGNAL NAME	COLOR	MI	ASY	GRP	ELM	PNT	S	LV	TYPE	DESCRIPTION OF ELEMENT		REMARK	ELEMENT NR.
<<-- CONT.OF			1	60	2	6				FROM GR. 20 ELM 11	P02		
-15.0			1	60	3	6				FROM GR. 20 ELM 10	P03		
			1	60	4	6				FROM GR. 20 ELM 09	P04		
			1	60	6	6				TO MOVE SENSOR	P06		
			1	60	7	6				TO TACHO SENSOR SP. MOTOR RIGHT	P07		
			1	60	8	6				TO TACHO SENSOR SP. MOTOR LEFT	P08		
			2	1	7	15				REPRODUCE HEAD, CH 01 TO 08	P07		
			2	1	8	15				REPRODUCE HEAD, CH 09 TO 16	P08		
			2	1	9	15				REPRODUCE HEAD, CH 17 TO 24	P09		
			2	1	10	16				HEAD BLOCK IDENTIFIER	P10		1.820.795.00
			2	2	1	15				INPUT	J01		
			2	2	2	15				OUTPUT	P01		
			2	3	1	15				INPUT	J01		
			2	3	2	15				OUTPUT	P01		
			2	4	1	15				INPUT	J01		
			2	4	2	15				OUTPUT	P01		
			3	1	1	23				LINE AMPLIFIER, CH 1	J01		1.820.715.00
			3	1	2	18A				CONTROLLER INTERNAL NRS CH 1	J02		1.820.815.00
			3	1	2	18B				CONTROLLER INTERNAL NRS CH 1	J02		1.820.815.00
			3	1	3	23				REPRODUCE AMPLIFIER, CH 1	J03		1.820.710.00
			3	1	4	23				RECORD AMPLIFIER, CH 1	J04		1.820.811.00
			3	1	5	23				HF-DRIVER, CH 1	J05		1.820.813.00
			3	1	6	23				LINE AMPLIFIER, CH 2	J06		1.820.715.00
			3	1	7	18A				CONTROLLER INTERNAL NRS CH 2	J07		1.820.815.00
			3	1	7	18B				CONTROLLER INTERNAL NRS CH 2	J07		1.820.815.00
			3	1	8	23				REPRODUCE AMPLIFIER, CH 2	J08		1.820.710.00
			3	1	9	23				RECORD AMPLIFIER, CH 2	J09		1.820.811.00
			3	1	10	23				HF-DRIVER, CH 2	J10		1.820.813.00
			3	1	11	23				LINE AMPLIFIER, CH 3	J11		1.820.715.00
			3	1	12	18A				CONTROLLER INTERNAL NRS CH 3	J12		1.820.815.00
			3	1	12	18B				CONTROLLER INTERNAL NRS CH 3	J12		1.820.815.00
			3	1	13	23				REPRODUCE AMPLIFIER, CH 3	J13		1.820.710.00
			3	1	14	23				RECORD AMPLIFIER, CH 3	J14		1.820.811.00
			3	1	15	23				HF-DRIVER, CH 3	J15		1.820.813.00
			3	1	16	23				LINE AMPLIFIER, CH 4	J16		1.820.715.00
			3	1	17	18A				CONTROLLER INTERNAL NRS CH 4	J17		1.820.815.00
			3	1	17	18B				CONTROLLER INTERNAL NRS CH 4	J17		1.820.815.00
			3	1	18	23				REPRODUCE AMPLIFIER, CH 4	J18		1.820.710.00
			3	1	19	23				RECORD AMPLIFIER, CH 4	J19		1.820.811.00
			3	1	20	23				HF-DRIVER, CH 4	J20		1.820.813.00
			3	1	21	18A				BUS CONVERTER	J21		1.820.717.00
			3	1	21	18B				BUS CONVERTER	J21		1.820.717.00
			3	1	70	6					P01		
			3	2	1	23				LINE AMPLIFIER, CH 5	J01		1.820.715.00
			3	2	2	18A				CONTROLLER INTERNAL NRS CH 5	J02		1.820.815.00
			3	2	2	18B				CONTROLLER INTERNAL NRS CH 5	J02		1.820.815.00
			3	2	3	23				REPRODUCE AMPLIFIER, CH 5	J03		1.820.710.00
			3	2	4	23				RECORD AMPLIFIER, CH 5	J04		1.820.811.00
			3	2	5	23				HF-DRIVER, CH 5	J05		1.820.813.00
			3	2	6	23				LINE AMPLIFIER, CH 6	J06		1.820.715.00
			3	2	7	18A				CONTROLLER INTERNAL NRS CH 6	J07		1.820.815.00
			3	2	7	18B				CONTROLLER INTERNAL NRS CH 6	J07		1.820.815.00
			3	2	8	23				REPRODUCE AMPLIFIER, CH 6	J08		1.820.710.00
			3	2	9	23				RECORD AMPLIFIER, CH 6	J09		1.820.811.00

WILLI STUDER AG * SIGNAL WIRE LIST * 89/07/20 * 9:25 * PAGE 65

* TAPE TRANSPORT & AUDIO MCH * * 89/04/19 - 00

SIGNAL NAME	COLOR	MI	ASY	GRP	ELM	PNT	S	LV	TYPE	DESCRIPTION OF ELEMENT	REMARK	ELEMENT NR.
<<-- CONT.OF			3	2	10	23				HF-DRIVER, CH 6	J10	1.820.813.00
-15.0			3	2	11	23				LINE AMPLIFIER, CH 7	J11	1.820.715.00
			3	2	12	18A				CONTROLLER INTERNAL NRS CH 7	J12	1.820.815.00
			3	2	12	18B				CONTROLLER INTERNAL NRS CH 7	J12	1.820.815.00
			3	2	13	23				REPRODUCE AMPLIFIER, CH 7	J13	1.820.710.00
			3	2	14	23				RECORD AMPLIFIER, CH 7	J14	1.820.811.00
			3	2	15	23				HF-DRIVER, CH 7	J15	1.820.813.00
			3	2	16	23				LINE AMPLIFIER, CH 8	J16	1.820.715.00
			3	2	17	18A				CONTROLLER INTERNAL NRS CH 8	J17	1.820.815.00
			3	2	17	18B				CONTROLLER INTERNAL NRS CH 8	J17	1.820.815.00
			3	2	18	23				REPRODUCE AMPLIFIER, CH 8	J18	1.820.710.00
			3	2	19	23				RECORD AMPLIFIER, CH 8	J19	1.820.811.00
			3	2	20	23				HF-DRIVER, CH 8	J20	1.820.813.00
			3	2	21	18A				BUS CONVERTER	J21	1.820.717.00
			3	2	21	18B				BUS CONVERTER	J21	1.820.717.00
			3	2	70	6					P01	
			3	3	1	5				SUPPLY PREAMPLIFIER CH 1 TO 8	J01	
			3	3	2	7			BX	SUPPLY ASY03, GRP01	J02	
			3	3	2	8			BX	SUPPLY ASY03, GRP01	J02	
			3	3	3	7			BX	SUPPLY ASY03, GRP02	J03	
			3	3	3	8			BX	SUPPLY ASY03, GRP02	J03	
			3	3	4	7			BX	SUPPLY CONNECTOR	J04	
			3	3	5	7			BX	SUPPLY ASY03, GRP04 (NRS OPTION)	J05	
			3	3	5	8			BX	SUPPLY ASY03, GRP04 (NRS OPTION)	J05	
			3	4	10	7			AX	TO GRP03, ELM05	P10	
			3	4	10	8			AX	TO GRP03, ELM05	P10	
			4	1	1	23				LINE AMPLIFIER, CH 9	J01	1.820.715.00
			4	1	2	18A				CONTROLLER INTERNAL NRS CH 9	J02	1.820.815.00
			4	1	2	18B				CONTROLLER INTERNAL NRS CH 9	J02	1.820.815.00
			4	1	3	23				REPRODUCE AMPLIFIER, CH 9	J03	1.820.710.00
			4	1	4	23				RECORD AMPLIFIER, CH 9	J04	1.820.811.00
			4	1	5	23				HF-DRIVER, CH 9	J05	1.820.813.00
			4	1	6	23				LINE AMPLIFIER, CH10	J06	1.820.715.00
			4	1	7	18A				CONTROLLER INTERNAL NRS CH10	J07	1.820.815.00
			4	1	7	18B				CONTROLLER INTERNAL NRS CH10	J07	1.820.815.00
			4	1	8	23				REPRODUCE AMPLIFIER, CH10	J08	1.820.710.00
			4	1	9	23				RECORD AMPLIFIER, CH10	J09	1.820.811.00
			4	1	10	23				HF-DRIVER, CH10	J10	1.820.813.00
			4	1	11	23				LINE AMPLIFIER, CH11	J11	1.820.715.00
			4	1	12	18A				CONTROLLER INTERNAL NRS CH11	J12	1.820.815.00
			4	1	12	18B				CONTROLLER INTERNAL NRS CH11	J12	1.820.815.00
			4	1	13	23				REPRODUCE AMPLIFIER, CH11	J13	1.820.710.00
			4	1	14	23				RECORD AMPLIFIER, CH11	J14	1.820.811.00
			4	1	15	23				HF-DRIVER, CH11	J15	1.820.813.00
			4	1	16	23				LINE AMPLIFIER, CH12	J16	1.820.715.00
			4	1	17	18A				CONTROLLER INTERNAL NRS CH12	J17	1.820.815.00
			4	1	17	18B				CONTROLLER INTERNAL NRS CH12	J17	1.820.815.00
			4	1	18	23				REPRODUCE AMPLIFIER, CH12	J18	1.820.710.00
			4	1	19	23				RECORD AMPLIFIER, CH12	J19	1.820.811.00
			4	1	20	23				HF-DRIVER, CH12	J20	1.820.813.00
			4	1	21	18A				BUS CONVERTER	J21	1.820.717.00
			4	1	21	18B				BUS CONVERTER	J21	1.820.717.00
			4	1	70	6					P01	
			4	2	1	23				LINE AMPLIFIER, CH13	J01	1.820.715.00

WILLI STUDER AG * SIGNAL WIRE LIST * 89/07/20 * 9:25 * PAGE 66

* TAPE TRANSPORT & AUDIO MCH * * 89/04/19 - 00

SIGNAL NAME	COLOR	MI	ASY	GRP	ELM	PNT	S	LV	TYPE	DESCRIPTION OF ELEMENT	REMARK	ELEMENT NR.
<<-- CONT.OF			4	2	2	18A				CONTROLLER INTERNAL NRS CH13	J02	1.820.815.00
-15.0			4	2	2	18B				CONTROLLER INTERNAL NRS CH13	J02	1.820.815.00
			4	2	3	23				REPRODUCE AMPLIFIER, CH13	J03	1.820.710.00
			4	2	4	23				RECORD AMPLIFIER, CH13	J04	1.820.811.00
			4	2	5	23				HF-DRIVER, CH13	J05	1.820.813.00
			4	2	6	23				LINE AMPLIFIER, CH14	J06	1.820.715.00
			4	2	7	18A				CONTROLLER INTERNAL NRS CH14	J07	1.820.815.00
			4	2	7	18B				CONTROLLER INTERNAL NRS CH14	J07	1.820.815.00
			4	2	8	23				REPRODUCE AMPLIFIER, CH14	J08	1.820.710.00
			4	2	9	23				RECORD AMPLIFIER, CH14	J09	1.820.811.00
			4	2	10	23				HF-DRIVER, CH14	J10	1.820.813.00
			4	2	11	23				LINE AMPLIFIER, CH15	J11	1.820.715.00
			4	2	12	18A				CONTROLLER INTERNAL NRS CH15	J12	1.820.815.00
			4	2	12	18B				CONTROLLER INTERNAL NRS CH15	J12	1.820.815.00
			4	2	13	23				REPRODUCE AMPLIFIER, CH15	J13	1.820.710.00
			4	2	14	23				RECORD AMPLIFIER, CH15	J14	1.820.811.00
			4	2	15	23				HF-DRIVER, CH15	J15	1.820.813.00
			4	2	16	23				LINE AMPLIFIER, CH16	J16	1.820.715.00
			4	2	17	18A				CONTROLLER INTERNAL NRS CH16	J17	1.820.815.00
			4	2	17	18B				CONTROLLER INTERNAL NRS CH16	J17	1.820.815.00
			4	2	18	23				REPRODUCE AMPLIFIER, CH16	J18	1.820.710.00
			4	2	19	23				RECORD AMPLIFIER, CH16	J19	1.820.811.00
			4	2	20	23				HF-DRIVER, CH16	J20	1.820.813.00
			4	2	21	18A				BUS CONVERTER	J21	1.820.717.00
			4	2	21	18B				BUS CONVERTER	J21	1.820.717.00
			4	2	70	6					P01	
			4	3	1	5				SUPPLY PREAMPLIFIER CH17 TO 24	J01	
			4	3	2	7			BX	SUPPLY ASY04, GRP01	J02	
			4	3	2	8			BX	SUPPLY ASY04, GRP01	J02	
			4	3	3	7			BX	SUPPLY ASY04, GRP02	J03	
			4	3	3	8			BX	SUPPLY ASY04, GRP02	J03	
			4	3	4	7			BX	SUPPLY CONNECTOR	J04	
			4	3	5	7			BX	SUPPLY ASY04, GRP04 (NRS OPTION)	J05	
			4	3	5	8			BX	SUPPLY ASY04, GRP04 (NRS OPTION)	J05	
			4	4	19	7			AX	FROM GRP03, ELM05 (DISTR. B)	P09	
			4	4	19	8			AX	FROM GRP03, ELM05 (DISTR. B)	P09	
			5	1	1	23				LINE AMPLIFIER, CH17	J01	1.820.715.00
			5	1	2	18A				CONTROLLER INTERNAL NRS CH17	J02	1.820.815.00
			5	1	2	18B				CONTROLLER INTERNAL NRS CH17	J02	1.820.815.00
			5	1	3	23				REPRODUCE AMPLIFIER, CH17	J03	1.820.710.00
			5	1	4	23				RECORD AMPLIFIER, CH17	J04	1.820.811.00
			5	1	5	23				HF-DRIVER, CH17	J05	1.820.813.00
			5	1	6	23				LINE AMPLIFIER, CH18	J06	1.820.715.00
			5	1	7	18A				CONTROLLER INTERNAL NRS CH18	J07	1.820.815.00
			5	1	7	18B				CONTROLLER INTERNAL NRS CH18	J07	1.820.815.00
			5	1	8	23				REPRODUCE AMPLIFIER, CH18	J08	1.820.710.00
			5	1	9	23				RECORD AMPLIFIER, CH18	J09	1.820.811.00
			5	1	10	23				HF-DRIVER, CH18	J10	1.820.813.00
			5	1	11	23				LINE AMPLIFIER, CH19	J11	1.820.715.00
			5	1	12	18A				CONTROLLER INTERNAL NRS CH19	J12	1.820.815.00
			5	1	12	18B				CONTROLLER INTERNAL NRS CH19	J12	1.820.815.00
			5	1	13	23				REPRODUCE AMPLIFIER, CH19	J13	1.820.710.00
			5	1	14	23				RECORD AMPLIFIER, CH19	J14	1.820.811.00
			5	1	15	23				HF-DRIVER, CH19	J15	1.820.813.00

```
*****************************************************************************************************************************
*    WILLI STUDER AG    *    S I G N A L     W I R E     L I S T                  * 89/07/20 *   9:25 *   P A G E  67   *
*****************************************************************************************************************************
*                              * TAPE TRANSPORT & AUDIO MCH *                          *  89/04/19 - 00                      *
*****************************************************************************************************************************

SIGNAL NAME   COLOR  MI  ASY GRP ELM PNT  S  LV  TYPE          DESCRIPTION OF ELEMENT                        REMARK      ELEMENT NR.
-----------  -----  --  ---------------  -  --  ------------  ------------------------------------------  ---------  ---------------
<<-- CONT.OF                5   1  16  23                    LINE AMPLIFIER, CH20                 J16                    1.820.715.00
-15.0                       5   1  17  18A                   CONTROLLER INTERNAL NRS CH20         J17                    1.820.815.00
                            5   1  17  18B                   CONTROLLER INTERNAL NRS CH20         J17                    1.820.815.00
                            5   1  18  23                    REPRODUCE AMPLIFIER, CH20            J18                    1.820.710.00
                            5   1  19  23                    RECORD AMPLIFIER, CH20               J19                    1.820.811.00
                            5   1  20  23                    HF-DRIVER, CH20                      J20                    1.820.813.00
                            5   1  21  18A                   BUS CONVERTER                        J21                    1.820.717.00
                            5   1  21  18B                   BUS CONVERTER                        J21                    1.820.717.00
                            5   1  70   6                                                        P01
                            5   2   1  23                    LINE AMPLIFIER, CH21                 J01                    1.820.715.00
                            5   2   2  18A                   CONTROLLER INTERNAL NRS CH21         J02                    1.820.815.00
                            5   2   2  18B                   CONTROLLER INTERNAL NRS CH21         J02                    1.820.815.00
                            5   2   3  23                    REPRODUCE AMPLIFIER, CH21            J03                    1.820.710.00
                            5   2   4  23                    RECORD AMPLIFIER, CH21               J04                    1.820.811.00
                            5   2   5  23                    HF-DRIVER, CH21                      J05                    1.820.813.00
                            5   2   6  23                    LINE AMPLIFIER, CH22                 J06                    1.820.715.00
                            5   2   7  18A                   CONTROLLER INTERNAL NRS CH22         J07                    1.820.815.00
                            5   2   7  18B                   CONTROLLER INTERNAL NRS CH22         J07                    1.820.815.00
                            5   2   8  23                    REPRODUCE AMPLIFIER, CH22            J08                    1.820.710.00
                            5   2   9  23                    RECORD AMPLIFIER, CH22               J09                    1.820.811.00
                            5   2  10  23                    HF-DRIVER, CH22                      J10                    1.820.813.00
                            5   2  11  23                    LINE AMPLIFIER, CH23                 J11                    1.820.715.00
                            5   2  12  18A                   CONTROLLER INTERNAL NRS CH23         J12                    1.820.815.00
                            5   2  12  18B                   CONTROLLER INTERNAL NRS CH23         J12                    1.820.815.00
                            5   2  13  23                    REPRODUCE AMPLIFIER, CH23            J13                    1.820.710.00
                            5   2  14  23                    RECORD AMPLIFIER, CH23               J14                    1.820.811.00
                            5   2  15  23                    HF-DRIVER, CH23                      J15                    1.820.813.00
                            5   2  16  23                    LINE AMPLIFIER, CH24                 J16                    1.820.715.00
                            5   2  17  18A                   CONTROLLER INTERNAL NRS CH24         J17                    1.820.815.00
                            5   2  17  18B                   CONTROLLER INTERNAL NRS CH24         J17                    1.820.815.00
                            5   2  18  23                    REPRODUCE AMPLIFIER, CH24            J18                    1.820.710.00
                            5   2  19  23                    RECORD AMPLIFIER, CH24               J19                    1.820.811.00
                            5   2  20  23                    HF-DRIVER, CH24                      J20                    1.820.813.00
                            5   2  21  18A                   BUS CONVERTER                        J21                    1.820.717.00
                            5   2  21  18B                   BUS CONVERTER                        J21                    1.820.717.00
                            5   2  70   6                                                        P01
                            5   3   1   5                    SUPPLY PREAMPLIFIER CH 9 TO 16       J01
                            5   3   2   7          BX        SUPPLY ASY05, GRP01                  J02
                            5   3   2   8          BX        SUPPLY ASY05, GRP01                  J02
                            5   3   3   7          BX        SUPPLY ASY05, GRP02                  J03
                            5   3   3   8          BX        SUPPLY ASY05, GRP02                  J03
                            5   3   4   7          BX        SUPPLY CONNECTOR                     J04
                            5   3   5   7          BX        SUPPLY ASY05, GRP04 (NRS OPTION)     J05
                            5   3   5   8          BX        SUPPLY ASY05, GRP04 (NRS OPTION)     J05
                            5   4  19   7          AX        FROM GRP03, ELM05 (DISTR. B)         P09
                            5   4  19   8          AX        FROM GRP03, ELM05 (DISTR. B)         P09
-----------  -----  --  ---------------  -  --  ------------  ------------------------------------------  ---------  ---------------
-26.0                       1  20   7   6                    TAPE LIFT MOTOR, LEFT                P07
                            1  20   8   6                    TAPE LIFT MOTOR, RIGHT               P08
                            1  20  14  16                    FUSE FAILURE DETECTOR                P14
                9           1  20  61   1          L         WIRE FIELD (FROM GRP20, ELM70)
                9           1  20  70  19          F         FROM GRP35, ELM59                    J13
                            1  32   2   3          BX        DC OUTPUT (GRP35, ELM55)             P02
                8           1  35   6   1          U         WIRE FIELD

*****************************************************************************************************************************
*    WILLI STUDER AG    *    S I G N A L     W I R E     L I S T                  * 89/07/20 *   9:25 *   P A G E  68   *
*****************************************************************************************************************************
*                              * TAPE TRANSPORT & AUDIO MCH *                          *  89/04/19 - 00                      *
*****************************************************************************************************************************

SIGNAL NAME   COLOR  MI  ASY GRP ELM PNT  S  LV  TYPE          DESCRIPTION OF ELEMENT                        REMARK      ELEMENT NR.
-----------  -----  --  ---------------  -  --  ------------  ------------------------------------------  ---------  ---------------
<<-- CONT.OF  8             1  35   6   2          L         WIRE FIELD
-26.0                       1  35   6   3                    WIRE FIELD
                            1  35   6   4                    WIRE FIELD
                8           1  35  55   3          AX        FROM GRP32, ELM02                    P06
                8           1  35  59  19          M         TO GRP20, ELM70                      P10
                            1  46   1   6                    FROM GRP20, ELM07                    P01
                            1  47   1   6                    FROM GRP20, ELM08 (BASIS B. TD)      P01
                            1  59   1  16                    FROM GRP20, ELM14 (BASIS B. TD)      P01
                            1  60   1   6                    FROM GR. 20 ELM 08                   P01
                            1  60   5   6                    TO TAPE LIFT MOTOR, RIGHT            P05
-----------  -----  --  ---------------  -  --  ------------  ------------------------------------------  ---------  ---------------
A-PNOISE                    1  22  17   8                                                        P14
                            1  22  18   8                                                        P15
                            1  22  19   8                                                        P16
                            1  22  22  10                    GENERATOR UNIT MCH                   J07                    1.820.725.00
-----------  -----  --  ---------------  -  --  ------------  ------------------------------------------  ---------  ---------------
A-PNRDT                     1  21  20   5                    COMMUNICATIONS CONTROLLER            J05                    1.820.718.00
                            1  22  20   5                    COMMUNICATIONS CONTROLLER            J05                    1.820.718.00
-----------  -----  --  ---------------  -  --  ------------  ------------------------------------------  ---------  ---------------
A-PNTDT                     1  21  20   6                    COMMUNICATIONS CONTROLLER            J05                    1.820.718.00
                            1  22  20   6                    COMMUNICATIONS CONTROLLER            J05                    1.820.718.00
-----------  -----  --  ---------------  -  --  ------------  ------------------------------------------  ---------  ---------------
A-RES                       1  22  17   5                                                        P14
                            1  22  18   5                                                        P15
                            1  22  19   5                                                        P16
                            1  22  22   8                    GENERATOR UNIT MCH                   J07                    1.820.725.00
-----------  -----  --  ---------------  -  --  ------------  ------------------------------------------  ---------  ---------------
ADS-CLK                     1  20  32  14                    BASIS BOARD AUDIO CONT. ELM15        P24
                            1  20  51   9B                   MASTER TO AUDIO INTERFACE            J12                    1.820.756.00
                            1  21  15  14                    TAPE DECK BASIS BOARD, ELM32         P08
                            1  21  20  10                    COMMUNICATIONS CONTROLLER            J05                    1.820.718.00
                            1  22  15  14                    TAPE DECK BASIS BOARD, ELM32         P08
                            1  22  20  10                    COMMUNICATIONS CONTROLLER            J05                    1.820.718.00
-----------  -----  --  ---------------  -  --  ------------  ------------------------------------------  ---------  ---------------
ADS-CTS                     1  20  32  18                    BASIS BOARD AUDIO CONT. ELM15        P24
                            1  20  51  11B                   MASTER TO AUDIO INTERFACE            J12                    1.820.756.00
                            1  21  15  18                    TAPE DECK BASIS BOARD, ELM32         P08
                            1  21  20  13                    COMMUNICATIONS CONTROLLER            J05                    1.820.718.00
                            1  22  15  18                    TAPE DECK BASIS BOARD, ELM32         P08
                            1  22  20  13                    COMMUNICATIONS CONTROLLER            J05                    1.820.718.00
-----------  -----  --  ---------------  -  --  ------------  ------------------------------------------  ---------  ---------------
ADS-DTR                     1  20  32  20                    BASIS BOARD AUDIO CONT. ELM15        P24
                            1  20  51  12B                   MASTER TO AUDIO INTERFACE            J12                    1.820.756.00
                            1  21  15  20                    TAPE DECK BASIS BOARD, ELM32         P08
                            1  21  20  11                    COMMUNICATIONS CONTROLLER            J05                    1.820.718.00
                            1  22  15  20                    TAPE DECK BASIS BOARD, ELM32         P08
                            1  22  20  11                    COMMUNICATIONS CONTROLLER            J05                    1.820.718.00
-----------  -----  --  ---------------  -  --  ------------  ------------------------------------------  ---------  ---------------
ADS-RX                      1  20  32  22                    BASIS BOARD AUDIO CONT. ELM15        P24
                            1  20  51  13B                   MASTER TO AUDIO INTERFACE            J12                    1.820.756.00
                            1  21  15  22                    TAPE DECK BASIS BOARD, ELM32         P08
                            1  21  20  12                    COMMUNICATIONS CONTROLLER            J05                    1.820.718.00
                            1  22  15  22                    TAPE DECK BASIS BOARD, ELM32         P08
                            1  22  20  12                    COMMUNICATIONS CONTROLLER            J05                    1.820.718.00
-----------  -----  --  ---------------  -  --  ------------  ------------------------------------------  ---------  ---------------
```

WILLI STUDER AG * SIGNAL WIRE LIST * 89/07/20 * 9:25 * PAGE 69
* TAPE TRANSPORT & AUDIO MCH * * 89/04/19 - 00

SIGNAL NAME	COLOR	MI	ASY	GRP	ELM	PNT	S	LV	TYPE	DESCRIPTION OF ELEMENT		REMARK	ELEMENT NR.
ADS-TX			1	20	32	24				BASIS BOARD AUDIO CONT. ELM15	P24		
			1	20	51	14B				MASTER TO AUDIO INTERFACE	J12		1.820.756.00
			1	21	15	24				TAPE DECK BASIS BOARD, ELM32	P08		
			1	21	20	9				COMMUNICATIONS CONTROLLER	J05		1.820.718.00
			1	22	15	24				TAPE DECK BASIS BOARD, ELM32	P08		
			1	22	20	9				COMMUNICATIONS CONTROLLER	J05		1.820.718.00
AFCSW-01			3	1	4	15				RECORD AMPLIFIER, CH 1	J04		1.820.811.00
			3	1	5	10				HF-DRIVER, CH 1	J05		1.820.813.00
AFCSW-02			3	1	9	15				RECORD AMPLIFIER, CH 2	J09		1.820.811.00
			3	1	10	10				HF-DRIVER, CH 2	J10		1.820.813.00
AFCSW-03			3	1	14	15				RECORD AMPLIFIER, CH 3	J14		1.820.811.00
			3	1	15	10				HF-DRIVER, CH 3	J15		1.820.813.00
AFCSW-04			3	1	19	15				RECORD AMPLIFIER, CH 4	J19		1.820.811.00
			3	1	20	10				HF-DRIVER, CH 4	J20		1.820.813.00
AFCSW-05			3	2	4	15				RECORD AMPLIFIER, CH 5	J04		1.820.811.00
			3	2	5	10				HF-DRIVER, CH 5	J05		1.820.813.00
AFCSW-06			3	2	9	15				RECORD AMPLIFIER, CH 6	J09		1.820.811.00
			3	2	10	10				HF-DRIVER, CH 6	J10		1.820.813.00
AFCSW-07			3	2	14	15				RECORD AMPLIFIER, CH 7	J14		1.820.811.00
			3	2	15	10				HF-DRIVER, CH 7	J15		1.820.813.00
AFCSW-08			3	2	19	15				RECORD AMPLIFIER, CH 8	J19		1.820.811.00
			3	2	20	10				HF-DRIVER, CH 8	J20		1.820.813.00
AFCSW-09			4	1	4	15				RECORD AMPLIFIER, CH 9	J04		1.820.811.00
			4	1	5	10				HF-DRIVER, CH 9	J05		1.820.813.00
AFCSW-10			4	1	9	15				RECORD AMPLIFIER, CH10	J09		1.820.811.00
			4	1	10	10				HF-DRIVER, CH10	J10		1.820.813.00
AFCSW-11			4	1	14	15				RECORD AMPLIFIER, CH11	J14		1.820.811.00
			4	1	15	10				HF-DRIVER, CH11	J15		1.820.813.00
AFCSW-12			4	1	19	15				RECORD AMPLIFIER, CH12	J19		1.820.811.00
			4	1	20	10				HF-DRIVER, CH12	J20		1.820.813.00
AFCSW-13			4	2	4	15				RECORD AMPLIFIER, CH13	J04		1.820.811.00
			4	2	5	10				HF-DRIVER, CH13	J05		1.820.813.00
AFCSW-14			4	2	9	15				RECORD AMPLIFIER, CH14	J09		1.820.811.00
			4	2	10	10				HF-DRIVER, CH14	J10		1.820.813.00
AFCSW-15			4	2	14	15				RECORD AMPLIFIER, CH15	J14		1.820.811.00
			4	2	15	10				HF-DRIVER, CH15	J15		1.820.813.00
AFCSW-16			4	2	19	15				RECORD AMPLIFIER, CH16	J19		1.820.811.00
			4	2	20	10				HF-DRIVER, CH16	J20		1.820.813.00

WILLI STUDER AG * SIGNAL WIRE LIST * 89/07/20 * 9:25 * PAGE 70
* TAPE TRANSPORT & AUDIO MCH * * 89/04/19 - 00

SIGNAL NAME	COLOR	MI	ASY	GRP	ELM	PNT	S	LV	TYPE	DESCRIPTION OF ELEMENT		REMARK	ELEMENT NR.
AFCSW-17			5	1	4	15				RECORD AMPLIFIER, CH17	J04		1.820.811.00
			5	1	5	10				HF-DRIVER, CH17	J05		1.820.813.00
AFCSW-18			5	1	9	15				RECORD AMPLIFIER, CH18	J09		1.820.811.00
			5	1	10	10				HF-DRIVER, CH18	J10		1.820.813.00
AFCSW-19			5	1	14	15				RECORD AMPLIFIER, CH19	J14		1.820.811.00
			5	1	15	10				HF-DRIVER, CH19	J15		1.820.813.00
AFCSW-20			5	1	19	15				RECORD AMPLIFIER, CH20	J19		1.820.811.00
			5	1	20	10				HF-DRIVER, CH20	J20		1.820.813.00
AFCSW-21			5	2	4	15				RECORD AMPLIFIER, CH21	J04		1.820.811.00
			5	2	5	10				HF-DRIVER, CH21	J05		1.820.813.00
AFCSW-22			5	2	9	15				RECORD AMPLIFIER, CH22	J09		1.820.811.00
			5	2	10	10				HF-DRIVER, CH22	J10		1.820.813.00
AFCSW-23			5	2	14	15				RECORD AMPLIFIER, CH23	J14		1.820.811.00
			5	2	15	10				HF-DRIVER, CH23	J15		1.820.813.00
AFCSW-24			5	2	19	15				RECORD AMPLIFIER, CH24	J19		1.820.811.00
			5	2	20	10				HF-DRIVER, CH24	J20		1.820.813.00
AN-CSPDC			1	20	3	7				CAPSTAN M. DRIVE AMPLIFIER	P03		
			1	20	42	3A				CAPSTAN INTERFACE	J03		1.820.727.00
			1	20	42	3B				CAPSTAN INTERFACE	J03		1.820.727.00
			1	39	1	7				FROM GRP20, ELM03 (BASIS B. TD)	P01		
AN-ICL			1	20	40	26				SPOOLING MOTOR DRIVER	J01		1.820.759.00
			1	20	47	3				TAPE DECK SERIAL INTERFACE	J08		1.820.763.00
AN-ICLD			1	20	1	13				SPOOLING M. DRIVE AMP. LEFT	P01		
			1	20	40	30				SPOOLING MOTOR DRIVER	J01		1.820.759.00
			1	33	2	13				FROM GRP20, ELM01 (BASIS B. TD)	P01		
AN-ICR			1	20	40	1				SPOOLING MOTOR DRIVER	J01		1.820.759.00
			1	20	40	3				SPOOLING MOTOR DRIVER	J01		1.820.759.00
			1	20	47	4				TAPE DECK SERIAL INTERFACE	J08		1.820.763.00
AN-ICRD			1	20	2	13				SPOOLING M. DRIVE AMP. RIGHT	P02		
			1	20	40	9				SPOOLING MOTOR DRIVER	J01		1.820.759.00
			1	29	5	13				FROM GRP20, ELM02 (BASIS B. TD)	P01		
			1	29	6	13				TO SPOOLING M. DRIVE AMP. RIGHT	P02		
			1	30	2	13				FROM GRP29, ELM06	P01		
AN-IRL			1	20	40	27				SPOOLING MOTOR DRIVER	J01		1.820.759.00
			1	20	45	6				SPOOLING MOTOR CONTROLLER	J06		1.820.822.00
AN-IRR			1	20	40	2				SPOOLING MOTOR DRIVER	J01		1.820.759.00
			1	20	40	4				SPOOLING MOTOR DRIVER	J01		1.820.759.00
			1	20	45	8				SPOOLING MOTOR CONTROLLER	J06		1.820.822.00

```
*    WILLI STUDER AG    *    S I G N A L    W I R E    L I S T                    * 89/07/20  *   9:25  *   P A G E  71   *
*                              * TAPE TRANSPORT & AUDIO MCH *                      * 89/04/19 - 00                        *
```

SIGNAL NAME	COLOR	MI	ASY	GRP	ELM	PNT	S	LV	TYPE	DESCRIPTION OF ELEMENT		REMARK	ELEMENT NR.
AN-RES1			1	20	9	7				TACHO SENSOR SPOOLING M. LEFT	P09		
			1	20	47	7				TAPE DECK SERIAL INTERFACE	J08		1.820.763.00
			1	36	1	7				TACHO SENSOR	P01		1.820.771.00
			1	60	4	7				FROM GR. 20 ELM 09	P04		
			1	60	8	7				TO TACHO SENSOR SP. MOTOR LEFT	P08		
AN-RES2			1	20	10	7				TACHO SENSOR SPOOLING M. RIGHT	P10		
			1	20	47	8				TAPE DECK SERIAL INTERFACE	J08		1.820.763.00
			1	37	1	7				TACHO SENSOR	P01		1.820.771.00
			1	60	3	7				FROM GR. 20 ELM 10	P03		
			1	60	7	7				TO TACHO SENSOR SP. MOTOR RIGHT	P07		
AN-RES3			1	20	11	7				MOVE SENSOR	P11		
			1	20	47	9				TAPE DECK SERIAL INTERFACE	J08		1.820.763.00
			1	45	1	7				FROM GRP20, ELM11	P01		
			1	60	2	7				FROM GR. 20 ELM 11	P02		
			1	60	6	7				TO MOVE SENSOR	P06		
AN-RES4			1	20	47	10				TAPE DECK SERIAL INTERFACE	J08		1.820.763.00
AN-TLKLC			2	1	7	25				REPRODUCE HEAD, CH 01 TO 08	P07		
			2	1	8	25				REPRODUCE HEAD, CH 09 TO 16	P08		
			2	1	9	25				REPRODUCE HEAD, CH 17 TO 24	P09		
			2	2	1	25				INPUT	J01		
			2	3	1	25				INPUT	J01		
			2	4	1	25				INPUT	J01		
AN-TLKUC			2	1	7	1				REPRODUCE HEAD, CH 01 TO 08	P07		
			2	1	8	1				REPRODUCE HEAD, CH 09 TO 16	P08		
			2	1	9	1				REPRODUCE HEAD, CH 17 TO 24	P09		
			2	2	1	1				INPUT	J01		
			2	3	1	1				INPUT	J01		
			2	4	1	1				INPUT	J01		
AN-TLK01			2	1	7	13				REPRODUCE HEAD, CH 01 TO 08	P07		
			2	2	1	13				INPUT	J01		
AN-TLK08			2	1	7	14				REPRODUCE HEAD, CH 01 TO 08	P07		
			2	2	1	14				INPUT	J01		
AN-TLK09			2	1	8	13				REPRODUCE HEAD, CH 09 TO 16	P08		
			2	3	1	13				INPUT	J01		
AN-TLK16			2	1	8	14				REPRODUCE HEAD, CH 09 TO 16	P08		
			2	3	1	14				INPUT	J01		
AN-TLK17			2	1	9	13				REPRODUCE HEAD, CH 17 TO 24	P09		
			2	4	1	13				INPUT	J01		
AN-TLK24			2	1	9	14				REPRODUCE HEAD, CH 17 TO 24	P09		
			2	4	1	14				INPUT	J01		
AN-TTL			1	20	12	9				TAPE TENSION SENSOR, LEFT	P12		
			1	20	45	1				SPOOLING MOTOR CONTROLLER	J06		1.820.822.00
			1	20	45	3				SPOOLING MOTOR CONTROLLER	J06		1.820.822.00

```
*    WILLI STUDER AG    *    S I G N A L    W I R E    L I S T                    * 89/07/20  *   9:25  *   P A G E  72   *
*                              * TAPE TRANSPORT & AUDIO MCH *                      * 89/04/19 - 00                        *
```

SIGNAL NAME	COLOR	MI	ASY	GRP	ELM	PNT	S	LV	TYPE	DESCRIPTION OF ELEMENT		REMARK	ELEMENT NR.
<<-- CONT.OF			1	20	47	1				TAPE DECK SERIAL INTERFACE	J08		1.820.763.00
AN-TTL			1	20	47	5				TAPE DECK SERIAL INTERFACE	J08		1.820.763.00
			1	42	1	9				FROM GRP20, ELM12 (BASIS B. TD)	P01		
AN-TTR			1	20	13	9				TAPE TENSION SENSOR, RIGHT	P13		
			1	20	45	2				SPOOLING MOTOR CONTROLLER	J06		1.820.822.00
			1	20	45	4				SPOOLING MOTOR CONTROLLER	J06		1.820.822.00
			1	20	47	2				TAPE DECK SERIAL INTERFACE	J08		1.820.763.00
			1	20	47	6				TAPE DECK SERIAL INTERFACE	J08		1.820.763.00
			1	43	1	9				FROM GRP20, ELM13 (BASIS B. TD)	P01		
ANM-SH1			1	48	1	26				FROM GRP50, ELM03 (DISPLAY DRIVER)			
			1	48	2	8				CONNECTOR EDIT ASSEMBLY			
			1	49	1	8				FROM GRP48, ELM02 (PUSHBUTTON BOARD)			
			1	50	3	26				CONNECTOR COMMAND UNIT	P02		
ANM-SH2			1	48	1	25				FROM GRP50, ELM03 (DISPLAY DRIVER)			
			1	48	2	10				CONNECTOR EDIT ASSEMBLY			
			1	49	1	10				FROM GRP48, ELM02 (PUSHBUTTON BOARD)			
			1	50	3	25				CONNECTOR COMMAND UNIT	P02		
ANM-SH3			1	48	1	24				FROM GRP50, ELM03 (DISPLAY DRIVER)			
			1	48	2	9				CONNECTOR EDIT ASSEMBLY			
			1	49	1	9				FROM GRP48, ELM02 (PUSHBUTTON BOARD)			
			1	50	3	24				CONNECTOR COMMAND UNIT	P02		
ARECEIV	3		1	53	1	8			B	CONNECTOR DATA BACK UP, FRONT P.	J01		
ARECEIVB	8		1	53	1	3			B	CONNECTOR DATA BACK UP, FRONT P.	J01		
ATRANS	4		1	53	1	2			B	CONNECTOR DATA BACK UP, FRONT P.	J01		
ATRANSB	2		1	53	1	7			B	CONNECTOR DATA BACK UP, FRONT P.	J01		
B-RCD-01			1	21	10	1				TO GRP24, ELM03	P05		
			1	21	23	6A				CONTROLLER EXTERNAL NRS	J08		1.820.816.00
			1	22	10	1				TO GRP24, ELM03	P05		
			1	22	23	6A				CONTROLLER EXTERNAL NRS	J08		1.820.816.00
			1	24	3	1				NRS CONTROL CONN. CH 1 TO 8			
B-RCD-02			1	21	10	3				TO GRP24, ELM03	P05		
			1	21	23	6B				CONTROLLER EXTERNAL NRS	J08		1.820.816.00
			1	22	10	3				TO GRP24, ELM03	P05		
			1	22	23	6B				CONTROLLER EXTERNAL NRS	J08		1.820.816.00
			1	24	3	2				NRS CONTROL CONN. CH 1 TO 8			
B-RCD-03			1	21	10	5				TO GRP24, ELM03	P05		
			1	21	23	7B				CONTROLLER EXTERNAL NRS	J08		1.820.816.00
			1	22	10	5				TO GRP24, ELM03	P05		
			1	22	23	7B				CONTROLLER EXTERNAL NRS	J08		1.820.816.00
			1	24	3	3				NRS CONTROL CONN. CH 1 TO 8			

WILLI STUDER AG * SIGNAL WIRE LIST * 89/07/20 * 9:25 * PAGE 73

* TAPE TRANSPORT & AUDIO MCH * * 89/04/19 - 00

SIGNAL NAME	COLOR	MI	ASY	GRP	ELM	PNT	S	LV	TYPE	DESCRIPTION OF ELEMENT		REMARK	ELEMENT NR.
B-RCD-04			1	21	10	9				TO GRP24, ELM03	P05		
			1	21	23	8B				CONTROLLER EXTERNAL NRS	J08		1.820.816.00
			1	22	10	9				TO GRP24, ELM03	P05		
			1	22	23	8B				CONTROLLER EXTERNAL NRS	J08		1.820.816.00
			1	24	3	5				NRS CONTROL CONN. CH 1 TO 8			
B-RCD-05			1	21	10	11				TO GRP24, ELM03	P05		
			1	21	23	9B				CONTROLLER EXTERNAL NRS	J08		1.820.816.00
			1	22	10	11				TO GRP24, ELM03	P05		
			1	22	23	9B				CONTROLLER EXTERNAL NRS	J08		1.820.816.00
			1	24	3	6				NRS CONTROL CONN. CH 1 TO 8			
B-RCD-06			1	21	10	4				TO GRP24, ELM03	P05		
			1	21	23	7A				CONTROLLER EXTERNAL NRS	J08		1.820.816.00
			1	22	10	4				TO GRP24, ELM03	P05		
			1	22	23	7A				CONTROLLER EXTERNAL NRS	J08		1.820.816.00
			1	24	3	10				NRS CONTROL CONN. CH 1 TO 8			
B-RCD-07			1	21	10	6				TO GRP24, ELM03	P05		
			1	21	23	8A				CONTROLLER EXTERNAL NRS	J08		1.820.816.00
			1	22	10	6				TO GRP24, ELM03	P05		
			1	22	23	8A				CONTROLLER EXTERNAL NRS	J08		1.820.816.00
			1	24	3	11				NRS CONTROL CONN. CH 1 TO 8			
B-RCD-08			1	21	10	10				TO GRP24, ELM03	P05		
			1	21	23	9A				CONTROLLER EXTERNAL NRS	J08		1.820.816.00
			1	22	10	10				TO GRP24, ELM03	P05		
			1	22	23	9A				CONTROLLER EXTERNAL NRS	J08		1.820.816.00
			1	24	3	13				NRS CONTROL CONN. CH 1 TO 8			
B-RCD-09			1	21	11	1				TO GRP24, ELM02	P06		
			1	21	23	14A				CONTROLLER EXTERNAL NRS	J08		1.820.816.00
			1	22	11	1				TO GRP24, ELM02	P06		
			1	22	23	14A				CONTROLLER EXTERNAL NRS	J08		1.820.816.00
			1	24	2	1				NRS CONTROL CONN. CH 9 TO 16			
B-RCD-10			1	21	11	3				TO GRP24, ELM02	P06		
			1	21	23	14B				CONTROLLER EXTERNAL NRS	J08		1.820.816.00
			1	22	11	3				TO GRP24, ELM02	P06		
			1	22	23	14B				CONTROLLER EXTERNAL NRS	J08		1.820.816.00
			1	24	2	2				NRS CONTROL CONN. CH 9 TO 16			
B-RCD-11			1	21	11	5				TO GRP24, ELM02	P06		
			1	21	23	15B				CONTROLLER EXTERNAL NRS	J08		1.820.816.00
			1	22	11	5				TO GRP24, ELM02	P06		
			1	22	23	15B				CONTROLLER EXTERNAL NRS	J08		1.820.816.00
			1	24	2	3				NRS CONTROL CONN. CH 9 TO 16			
B-RCD-12			1	21	11	9				TO GRP24, ELM02	P06		
			1	21	23	16B				CONTROLLER EXTERNAL NRS	J08		1.820.816.00
			1	22	11	9				TO GRP24, ELM02	P06		
			1	22	23	16B				CONTROLLER EXTERNAL NRS	J08		1.820.816.00
			1	24	2	5				NRS CONTROL CONN. CH 9 TO 16			

WILLI STUDER AG * SIGNAL WIRE LIST * 89/07/20 * 9:25 * PAGE 74

* TAPE TRANSPORT & AUDIO MCH * * 89/04/19 - 00

SIGNAL NAME	COLOR	MI	ASY	GRP	ELM	PNT	S	LV	TYPE	DESCRIPTION OF ELEMENT		REMARK	ELEMENT NR.
B-RCD-13			1	21	11	11				TO GRP24, ELM02	P06		
			1	21	23	17B				CONTROLLER EXTERNAL NRS	J08		1.820.816.00
			1	22	11	11				TO GRP24, ELM02	P06		
			1	22	23	17B				CONTROLLER EXTERNAL NRS	J08		1.820.816.00
			1	24	2	6				NRS CONTROL CONN. CH 9 TO 16			
B-RCD-14			1	21	11	4				TO GRP24, ELM02	P06		
			1	21	23	15A				CONTROLLER EXTERNAL NRS	J08		1.820.816.00
			1	22	11	4				TO GRP24, ELM02	P06		
			1	22	23	15A				CONTROLLER EXTERNAL NRS	J08		1.820.816.00
			1	24	2	10				NRS CONTROL CONN. CH 9 TO 16			
B-RCD-15			1	21	11	6				TO GRP24, ELM02	P06		
			1	21	23	16A				CONTROLLER EXTERNAL NRS	J08		1.820.816.00
			1	22	11	6				TO GRP24, ELM02	P06		
			1	22	23	16A				CONTROLLER EXTERNAL NRS	J08		1.820.816.00
			1	24	2	11				NRS CONTROL CONN. CH 9 TO 16			
B-RCD-16			1	21	11	10				TO GRP24, ELM02	P06		
			1	21	23	17A				CONTROLLER EXTERNAL NRS	J08		1.820.816.00
			1	22	11	10				TO GRP24, ELM02	P06		
			1	22	23	17A				CONTROLLER EXTERNAL NRS	J08		1.820.816.00
			1	24	2	13				NRS CONTROL CONN. CH 9 TO 16			
B-RCD-17			1	21	12	1				TO GRP24, ELM01	P07		
			1	21	23	21A				CONTROLLER EXTERNAL NRS	J08		1.820.816.00
			1	22	12	1				TO GRP24, ELM01	P07		
			1	22	23	21A				CONTROLLER EXTERNAL NRS	J08		1.820.816.00
			1	24	1	1				NRS CONTROL CONN. CH 17 TO 24			
B-RCD-18			1	21	12	3				TO GRP24, ELM01	P07		
			1	21	23	21B				CONTROLLER EXTERNAL NRS	J08		1.820.816.00
			1	22	12	3				TO GRP24, ELM01	P07		
			1	22	23	21B				CONTROLLER EXTERNAL NRS	J08		1.820.816.00
			1	24	1	2				NRS CONTROL CONN. CH 17 TO 24			
B-RCD-19			1	21	12	5				TO GRP24, ELM01	P07		
			1	21	23	22B				CONTROLLER EXTERNAL NRS	J08		1.820.816.00
			1	22	12	5				TO GRP24, ELM01	P07		
			1	22	23	22B				CONTROLLER EXTERNAL NRS	J08		1.820.816.00
			1	24	1	3				NRS CONTROL CONN. CH 17 TO 24			
B-RCD-20			1	21	12	9				TO GRP24, ELM01	P07		
			1	21	23	23B				CONTROLLER EXTERNAL NRS	J08		1.820.816.00
			1	22	12	9				TO GRP24, ELM01	P07		
			1	22	23	23B				CONTROLLER EXTERNAL NRS	J08		1.820.816.00
			1	24	1	5				NRS CONTROL CONN. CH 17 TO 24			
B-RCD-21			1	21	12	11				TO GRP24, ELM01	P07		
			1	21	23	24B				CONTROLLER EXTERNAL NRS	J08		1.820.816.00
			1	22	12	11				TO GRP24, ELM01	P07		
			1	22	23	24B				CONTROLLER EXTERNAL NRS	J08		1.820.816.00
			1	24	1	6				NRS CONTROL CONN. CH 17 TO 24			

* WILLI STUDER AG * S I G N A L W I R E L I S T * 89/07/20 * 9:25 * P A G E 75 *

* * TAPE TRANSPORT & AUDIO MCH * * 89/04/19 - 00 *

SIGNAL NAME	COLOR	MI	ASY	GRP	ELM	PNT	S	LV	TYPE	DESCRIPTION OF ELEMENT		REMARK	ELEMENT NR.
B-RCD-22			1	21	12	4				TO GRP24, ELM01	P07		
			1	21	23	22A				CONTROLLER EXTERNAL NRS	J08		1.820.816.00
			1	22	12	4				TO GRP24, ELM01	P07		
			1	22	23	22A				CONTROLLER EXTERNAL NRS	J08		1.820.816.00
			1	24	1	10				NRS CONTROL CONN. CH 17 TO 24			
B-RCD-23			1	21	12	6				TO GRP24, ELM01	P07		
			1	21	23	23A				CONTROLLER EXTERNAL NRS	J08		1.820.816.00
			1	22	12	6				TO GRP24, ELM01	P07		
			1	22	23	23A				CONTROLLER EXTERNAL NRS	J08		1.820.816.00
			1	24	1	11				NRS CONTROL CONN. CH 17 TO 24			
B-RCD-24			1	21	12	10				TO GRP24, ELM01	P07		
			1	21	23	24A				CONTROLLER EXTERNAL NRS	J08		1.820.816.00
			1	22	12	10				TO GRP24, ELM01	P07		
			1	22	23	24A				CONTROLLER EXTERNAL NRS	J08		1.820.816.00
			1	24	1	13				NRS CONTROL CONN. CH 17 TO 24			
BIAFB-01			3	1	4	3				RECORD AMPLIFIER, CH 1	J04		1.820.811.00
			3	1	5	1				HF-DRIVER, CH 1	J05		1.820.813.00
BIAFB-02			3	1	9	3				RECORD AMPLIFIER, CH 2	J09		1.820.811.00
			3	1	10	1				HF-DRIVER, CH 2	J10		1.820.813.00
BIAFB-03			3	1	14	3				RECORD AMPLIFIER, CH 3	J14		1.820.811.00
			3	1	15	1				HF-DRIVER, CH 3	J15		1.820.813.00
BIAFB-04			3	1	19	3				RECORD AMPLIFIER, CH 4	J19		1.820.811.00
			3	1	20	1				HF-DRIVER, CH 4	J20		1.820.813.00
BIAFB-05			3	2	4	3				RECORD AMPLIFIER, CH 5	J04		1.820.811.00
			3	2	5	1				HF-DRIVER, CH 5	J05		1.820.813.00
BIAFB-06			3	2	9	3				RECORD AMPLIFIER, CH 6	J09		1.820.811.00
			3	2	10	1				HF-DRIVER, CH 6	J10		1.820.813.00
BIAFB-07			3	2	14	3				RECORD AMPLIFIER, CH 7	J14		1.820.811.00
			3	2	15	1				HF-DRIVER, CH 7	J15		1.820.813.00
BIAFB-08			3	2	19	3				RECORD AMPLIFIER, CH 8	J19		1.820.811.00
			3	2	20	1				HF-DRIVER, CH 8	J20		1.820.813.00
BIAFB-09			4	1	4	3				RECORD AMPLIFIER, CH 9	J04		1.820.811.00
			4	1	5	1				HF-DRIVER, CH 9	J05		1.820.813.00
BIAFB-10			4	1	9	3				RECORD AMPLIFIER, CH10	J09		1.820.811.00
			4	1	10	1				HF-DRIVER, CH10	J10		1.820.813.00
BIAFB-11			4	1	14	3				RECORD AMPLIFIER, CH11	J14		1.820.811.00
			4	1	15	1				HF-DRIVER, CH11	J15		1.820.813.00
BIAFB-12			4	1	19	3				RECORD AMPLIFIER, CH12	J19		1.820.811.00
			4	1	20	1				HF-DRIVER, CH12	J20		1.820.813.00
BIAFB-13			4	2	4	3				RECORD AMPLIFIER, CH13	J04		1.820.811.00
			4	2	5	1				HF-DRIVER, CH13	J05		1.820.813.00

* WILLI STUDER AG * S I G N A L W I R E L I S T * 89/07/20 * 9:25 * P A G E 76 *

* * TAPE TRANSPORT & AUDIO MCH * * 89/04/19 - 00 *

SIGNAL NAME	COLOR	MI	ASY	GRP	ELM	PNT	S	LV	TYPE	DESCRIPTION OF ELEMENT		REMARK	ELEMENT NR.
BIAFB-14			4	2	9	3				RECORD AMPLIFIER, CH14	J09		1.820.811.00
			4	2	10	1				HF-DRIVER, CH14	J10		1.820.813.00
BIAFB-15			4	2	14	3				RECORD AMPLIFIER, CH15	J14		1.820.811.00
			4	2	15	1				HF-DRIVER, CH15	J15		1.820.813.00
BIAFB-16			4	2	19	3				RECORD AMPLIFIER, CH16	J19		1.820.811.00
			4	2	20	1				HF-DRIVER, CH16	J20		1.820.813.00
BIAFB-17			5	1	4	3				RECORD AMPLIFIER, CH17	J04		1.820.811.00
			5	1	5	1				HF-DRIVER, CH17	J05		1.820.813.00
BIAFB-18			5	1	9	3				RECORD AMPLIFIER, CH18	J09		1.820.811.00
			5	1	10	1				HF-DRIVER, CH18	J10		1.820.813.00
BIAFB-19			5	1	14	3				RECORD AMPLIFIER, CH19	J14		1.820.811.00
			5	1	15	1				HF-DRIVER, CH19	J15		1.820.813.00
BIAFB-20			5	1	19	3				RECORD AMPLIFIER, CH20	J19		1.820.811.00
			5	1	20	1				HF-DRIVER, CH20	J20		1.820.813.00
BIAFB-21			5	2	4	3				RECORD AMPLIFIER, CH21	J04		1.820.811.00
			5	2	5	1				HF-DRIVER, CH21	J05		1.820.813.00
BIAFB-22			5	2	9	3				RECORD AMPLIFIER, CH22	J09		1.820.811.00
			5	2	10	1				HF-DRIVER, CH22	J10		1.820.813.00
BIAFB-23			5	2	14	3				RECORD AMPLIFIER, CH23	J14		1.820.811.00
			5	2	15	1				HF-DRIVER, CH23	J15		1.820.813.00
BIAFB-24			5	2	19	3				RECORD AMPLIFIER, CH24	J19		1.820.811.00
			5	2	20	1				HF-DRIVER, CH24	J20		1.820.813.00
BIASA-01			3	1	4	6				RECORD AMPLIFIER, CH 1	J04		1.820.811.00
			3	1	5	5				HF-DRIVER, CH 1	J05		1.820.813.00
BIASA-02			3	1	9	6				RECORD AMPLIFIER, CH 2	J09		1.820.811.00
			3	1	10	5				HF-DRIVER, CH 2	J10		1.820.813.00
BIASA-03			3	1	14	6				RECORD AMPLIFIER, CH 3	J14		1.820.811.00
			3	1	15	5				HF-DRIVER, CH 3	J15		1.820.813.00
BIASA-04			3	1	19	6				RECORD AMPLIFIER, CH 4	J19		1.820.811.00
			3	1	20	5				HF-DRIVER, CH 4	J20		1.820.813.00
BIASA-05			3	2	4	6				RECORD AMPLIFIER, CH 5	J04		1.820.811.00
			3	2	5	5				HF-DRIVER, CH 5	J05		1.820.813.00
BIASA-06			3	2	9	6				RECORD AMPLIFIER, CH 6	J09		1.820.811.00
			3	2	10	5				HF-DRIVER, CH 6	J10		1.820.813.00
BIASA-07			3	2	14	6				RECORD AMPLIFIER, CH 7	J14		1.820.811.00
			3	2	15	5				HF-DRIVER, CH 7	J15		1.820.813.00
BIASA-08			3	2	19	6				RECORD AMPLIFIER, CH 8	J19		1.820.811.00
			3	2	20	5				HF-DRIVER, CH 8	J20		1.820.813.00

* WILLI STUDER AG * S I G N A L W I R E L I S T * 89/07/20 * 9:25 * P A G E 77 *

* TAPE TRANSPORT & AUDIO MCH * * 89/04/19 - 00 *

SIGNAL NAME	COLOR	MI	ASY	GRP	ELM	PNT	S	LV	TYPE	DESCRIPTION OF ELEMENT		REMARK	ELEMENT NR.
BIASA-09			4	1	4	6				RECORD AMPLIFIER, CH 9	J04		1.820.811.00
			4	1	5	5				HF-DRIVER, CH 9	J05		1.820.813.00
BIASA-10			4	1	9	6				RECORD AMPLIFIER, CH10	J09		1.820.811.00
			4	1	10	5				HF-DRIVER, CH10	J10		1.820.813.00
BIASA-11			4	1	14	6				RECORD AMPLIFIER, CH11	J14		1.820.811.00
			4	1	15	5				HF-DRIVER, CH11	J15		1.820.813.00
BIASA-12			4	1	19	6				RECORD AMPLIFIER, CH12	J19		1.820.811.00
			4	1	20	5				HF-DRIVER, CH12	J20		1.820.813.00
BIASA-13			4	2	4	6				RECORD AMPLIFIER, CH13	J04		1.820.811.00
			4	2	5	5				HF-DRIVER, CH13	J05		1.820.813.00
BIASA-14			4	2	9	6				RECORD AMPLIFIER, CH14	J09		1.820.811.00
			4	2	10	5				HF-DRIVER, CH14	J10		1.820.813.00
BIASA-15			4	2	14	6				RECORD AMPLIFIER, CH15	J14		1.820.811.00
			4	2	15	5				HF-DRIVER, CH15	J15		1.820.813.00
BIASA-16			4	2	19	6				RECORD AMPLIFIER, CH16	J19		1.820.811.00
			4	2	20	5				HF-DRIVER, CH16	J20		1.820.813.00
BIASA-17			5	1	4	6				RECORD AMPLIFIER, CH17	J04		1.820.811.00
			5	1	5	5				HF-DRIVER, CH17	J05		1.820.813.00
BIASA-18			5	1	9	6				RECORD AMPLIFIER, CH18	J09		1.820.811.00
			5	1	10	5				HF-DRIVER, CH18	J10		1.820.813.00
BIASA-19			5	1	14	6				RECORD AMPLIFIER, CH19	J14		1.820.811.00
			5	1	15	5				HF-DRIVER, CH19	J15		1.820.813.00
BIASA-20			5	1	19	6				RECORD AMPLIFIER, CH20	J19		1.820.811.00
			5	1	20	5				HF-DRIVER, CH20	J20		1.820.813.00
BIASA-21			5	2	4	6				RECORD AMPLIFIER, CH21	J04		1.820.811.00
			5	2	5	5				HF-DRIVER, CH21	J05		1.820.813.00
BIASA-22			5	2	9	6				RECORD AMPLIFIER, CH22	J09		1.820.811.00
			5	2	10	5				HF-DRIVER, CH22	J10		1.820.813.00
BIASA-23			5	2	14	6				RECORD AMPLIFIER, CH23	J14		1.820.811.00
			5	2	15	5				HF-DRIVER, CH23	J15		1.820.813.00
BIASA-24			5	2	19	6				RECORD AMPLIFIER, CH24	J19		1.820.811.00
			5	2	20	5				HF-DRIVER, CH24	J20		1.820.813.00
BIASB-01			3	1	4	7				RECORD AMPLIFIER, CH 1	J04		1.820.811.00
			3	1	5	6				HF-DRIVER, CH 1	J05		1.820.813.00
BIASB-02			3	1	9	7				RECORD AMPLIFIER, CH 2	J09		1.820.811.00
			3	1	10	6				HF-DRIVER, CH 2	J10		1.820.813.00
BIASB-03			3	1	14	7				RECORD AMPLIFIER, CH 3	J14		1.820.811.00
			3	1	15	6				HF-DRIVER, CH 3	J15		1.820.813.00

* WILLI STUDER AG * S I G N A L W I R E L I S T * 89/07/20 * 9:25 * P A G E 78 *

* * TAPE TRANSPORT & AUDIO MCH * * 89/04/19 - 00 *

SIGNAL NAME	COLOR	MI	ASY	GRP	ELM	PNT	S	LV	TYPE	DESCRIPTION OF ELEMENT		REMARK	ELEMENT NR.
BIASB-04			3	1	19	7				RECORD AMPLIFIER, CH 4	J19		1.820.811.00
			3	1	20	6				HF-DRIVER, CH 4	J20		1.820.813.00
BIASB-05			3	2	4	7				RECORD AMPLIFIER, CH 5	J04		1.820.811.00
			3	2	5	6				HF-DRIVER, CH 5	J05		1.820.813.00
BIASB-06			3	2	9	7				RECORD AMPLIFIER, CH 6	J09		1.820.811.00
			3	2	10	6				HF-DRIVER, CH 6	J10		1.820.813.00
BIASB-07			3	2	14	7				RECORD AMPLIFIER, CH 7	J14		1.820.811.00
			3	2	15	6				HF-DRIVER, CH 7	J15		1.820.813.00
BIASB-08			3	2	19	7				RECORD AMPLIFIER, CH 8	J19		1.820.811.00
			3	2	20	6				HF-DRIVER, CH 8	J20		1.820.813.00
BIASB-09			4	1	4	7				RECORD AMPLIFIER, CH 9	J04		1.820.811.00
			4	1	5	6				HF-DRIVER, CH 9	J05		1.820.813.00
BIASB-10			4	1	9	7				RECORD AMPLIFIER, CH10	J09		1.820.811.00
			4	1	10	6				HF-DRIVER, CH10	J10		1.820.813.00
BIASB-11			4	1	14	7				RECORD AMPLIFIER, CH11	J14		1.820.811.00
			4	1	15	6				HF-DRIVER, CH11	J15		1.820.813.00
BIASB-12			4	1	19	7				RECORD AMPLIFIER, CH12	J19		1.820.811.00
			4	1	20	6				HF-DRIVER, CH12	J20		1.820.813.00
BIASB-13			4	2	4	7				RECORD AMPLIFIER, CH13	J04		1.820.811.00
			4	2	5	6				HF-DRIVER, CH13	J05		1.820.813.00
BIASB-14			4	2	9	7				RECORD AMPLIFIER, CH14	J09		1.820.811.00
			4	2	10	6				HF-DRIVER, CH14	J10		1.820.813.00
BIASB-15			4	2	14	7				RECORD AMPLIFIER, CH15	J14		1.820.811.00
			4	2	15	6				HF-DRIVER, CH15	J15		1.820.813.00
BIASB-16			4	2	19	7				RECORD AMPLIFIER, CH16	J19		1.820.811.00
			4	2	20	6				HF-DRIVER, CH16	J20		1.820.813.00
BIASB-17			5	1	4	7				RECORD AMPLIFIER, CH17	J04		1.820.811.00
			5	1	5	6				HF-DRIVER, CH17	J05		1.820.813.00
BIASB-18			5	1	9	7				RECORD AMPLIFIER, CH18	J09		1.820.811.00
			5	1	10	6				HF-DRIVER, CH18	J10		1.820.813.00
BIASB-19			5	1	14	7				RECORD AMPLIFIER, CH19	J14		1.820.811.00
			5	1	15	6				HF-DRIVER, CH19	J15		1.820.813.00
BIASB-20			5	1	19	7				RECORD AMPLIFIER, CH20	J19		1.820.811.00
			5	1	20	6				HF-DRIVER, CH20	J20		1.820.813.00
BIASB-21			5	2	4	7				RECORD AMPLIFIER, CH21	J04		1.820.811.00
			5	2	5	6				HF-DRIVER, CH21	J05		1.820.813.00
BIASB-22			5	2	9	7				RECORD AMPLIFIER, CH22	J09		1.820.811.00
			5	2	10	6				HF-DRIVER, CH22	J10		1.820.813.00

SIGNAL NAME	COLOR	MI	ASY	GRP	ELM	PNT	S	LV	TYPE	DESCRIPTION OF ELEMENT		REMARK	ELEMENT NR.
BIASB-23			5	2	14	7				RECORD AMPLIFIER, CH23	J14		1.820.811.00
			5	2	15	6				HF-DRIVER, CH23	J15		1.820.813.00
BIASB-24			5	2	19	7				RECORD AMPLIFIER, CH24	J19		1.820.811.00
			5	2	20	6				HF-DRIVER, CH24	J20		1.820.813.00
BIASC-01			3	1	4	8				RECORD AMPLIFIER, CH 1	J04		1.820.811.00
			3	1	5	7				HF-DRIVER, CH 1	J05		1.820.813.00
BIASC-02			3	1	9	8				RECORD AMPLIFIER, CH 2	J09		1.820.811.00
			3	1	10	7				HF-DRIVER, CH 2	J10		1.820.813.00
BIASC-03			3	1	14	8				RECORD AMPLIFIER, CH 3	J14		1.820.811.00
			3	1	15	7				HF-DRIVER, CH 3	J15		1.820.813.00
BIASC-04			3	1	19	8				RECORD AMPLIFIER, CH 4	J19		1.820.811.00
			3	1	20	7				HF-DRIVER, CH 4	J20		1.820.813.00
BIASC-05			3	2	4	8				RECORD AMPLIFIER, CH 5	J04		1.820.811.00
			3	2	5	7				HF-DRIVER, CH 5	J05		1.820.813.00
BIASC-06			3	2	9	8				RECORD AMPLIFIER, CH 6	J09		1.820.811.00
			3	2	10	7				HF-DRIVER, CH 6	J10		1.820.813.00
BIASC-07			3	2	14	8				RECORD AMPLIFIER, CH 7	J14		1.820.811.00
			3	2	15	7				HF-DRIVER, CH 7	J15		1.820.813.00
BIASC-08			3	2	19	8				RECORD AMPLIFIER, CH 8	J19		1.820.811.00
			3	2	20	7				HF-DRIVER, CH 8	J20		1.820.813.00
BIASC-09			4	1	4	8				RECORD AMPLIFIER, CH 9	J04		1.820.811.00
			4	1	5	7				HF-DRIVER, CH 9	J05		1.820.813.00
BIASC-10			4	1	9	8				RECORD AMPLIFIER, CH10	J09		1.820.811.00
			4	1	10	7				HF-DRIVER, CH10	J10		1.820.813.00
BIASC-11			4	1	14	8				RECORD AMPLIFIER, CH11	J14		1.820.811.00
			4	1	15	7				HF-DRIVER, CH11	J15		1.820.813.00
BIASC-12			4	1	19	8				RECORD AMPLIFIER, CH12	J19		1.820.811.00
			4	1	20	7				HF-DRIVER, CH12	J20		1.820.813.00
BIASC-13			4	2	4	8				RECORD AMPLIFIER, CH13	J04		1.820.811.00
			4	2	5	7				HF-DRIVER, CH13	J05		1.820.813.00
BIASC-14			4	2	9	8				RECORD AMPLIFIER, CH14	J09		1.820.811.00
			4	2	10	7				HF-DRIVER, CH14	J10		1.820.813.00
BIASC-15			4	2	14	8				RECORD AMPLIFIER, CH15	J14		1.820.811.00
			4	2	15	7				HF-DRIVER, CH15	J15		1.820.813.00
BIASC-16			4	2	19	8				RECORD AMPLIFIER, CH16	J19		1.820.811.00
			4	2	20	7				HF-DRIVER, CH16	J20		1.820.813.00
BIASC-17			5	1	4	8				RECORD AMPLIFIER, CH17	J04		1.820.811.00
			5	1	5	7				HF-DRIVER, CH17	J05		1.820.813.00

SIGNAL NAME	COLOR	MI	ASY	GRP	ELM	PNT	S	LV	TYPE	DESCRIPTION OF ELEMENT		REMARK	ELEMENT NR.
BIASC-18			5	1	9	8				RECORD AMPLIFIER, CH18	J09		1.820.811.00
			5	1	10	7				HF-DRIVER, CH18	J10		1.820.813.00
BIASC-19			5	1	14	8				RECORD AMPLIFIER, CH19	J14		1.820.811.00
			5	1	15	7				HF-DRIVER, CH19	J15		1.820.813.00
BIASC-20			5	1	19	8				RECORD AMPLIFIER, CH20	J19		1.820.811.00
			5	1	20	7				HF-DRIVER, CH20	J20		1.820.813.00
BIASC-21			5	2	4	8				RECORD AMPLIFIER, CH21	J04		1.820.811.00
			5	2	5	7				HF-DRIVER, CH21	J05		1.820.813.00
BIASC-22			5	2	9	8				RECORD AMPLIFIER, CH22	J09		1.820.811.00
			5	2	10	7				HF-DRIVER, CH22	J10		1.820.813.00
BIASC-23			5	2	14	8				RECORD AMPLIFIER, CH23	J14		1.820.811.00
			5	2	15	7				HF-DRIVER, CH23	J15		1.820.813.00
BIASC-24			5	2	19	8				RECORD AMPLIFIER, CH24	J19		1.820.811.00
			5	2	20	7				HF-DRIVER, CH24	J20		1.820.813.00
BM-0.2			1	48	1	6				FROM GRP50, ELM03 (DISPLAY DRIVER)			
			1	48	3	8				WIRE FIELD			
			1	50	3	6				CONNECTOR COMMAND UNIT	P02		
BM-0.3			1	48	1	7				FROM GRP50, ELM03 (DISPLAY DRIVER)			
			1	48	3	7				WIRE FIELD			
			1	50	3	7				CONNECTOR COMMAND UNIT	P02		
BM-0.4			1	48	1	8				FROM GRP50, ELM03 (DISPLAY DRIVER)			
			1	48	3	6				WIRE FIELD			
			1	50	3	8				CONNECTOR COMMAND UNIT	P02		
BM-0.5			1	48	1	9				FROM GRP50, ELM03 (DISPLAY DRIVER)			
			1	48	3	5				WIRE FIELD			
			1	50	3	9				CONNECTOR COMMAND UNIT	P02		
BM-0.6			1	48	1	10				FROM GRP50, ELM03 (DISPLAY DRIVER)			
			1	48	3	4				WIRE FIELD			
			1	50	3	10				CONNECTOR COMMAND UNIT	P02		
BM-0.7			1	48	1	11				FROM GRP50, ELM03 (DISPLAY DRIVER)			
			1	48	3	3				WIRE FIELD			
			1	50	3	11				CONNECTOR COMMAND UNIT	P02		
BR-FADRY			1	23	8	8			B	CONN. PARALLEL REMOTE CONTROL	J07		
			1	25	3	8			B	CONN. PARALLEL REMOTE CONTROL	J03		
			1	27	4	15				TO CONN. PARALLEL REMOTE CONTR.	P04		
BR-FORW			1	23	8	3			B	CONN. PARALLEL REMOTE CONTROL	J07		
			1	25	2	3			B	CONNECTOR SYNCHRONIZER CONTROL	J02		
			1	25	3	3			B	CONN. PARALLEL REMOTE CONTROL	J03		
			1	27	3	5				TO GRP25, ELM02 (SYNCHRONIZER)	P03		
			1	27	4	5				TO CONN. PARALLEL REMOTE CONTR.	P04		

SIGNAL NAME	COLOR	MI	ASY	GRP	ELM	PNT	S	LV	TYPE	DESCRIPTION OF ELEMENT		REMARK	ELEMENT NR.
BR-LOCST			1	23	8	7			B	CONN. PARALLEL REMOTE CONTROL	J07		
			1	25	3	7			B	CONN. PARALLEL REMOTE CONTROL	J03		
			1	27	4	13				TO CONN. PARALLEL REMOTE CONTR.	P04		
BR-PLAY			1	23	8	15			B	CONN. PARALLEL REMOTE CONTROL	J07		
			1	25	2	15			B	CONNECTOR SYNCHRONIZER CONTROL	J02		
			1	25	3	15			B	CONN. PARALLEL REMOTE CONTROL	J03		
			1	27	3	4				TO GRP25, ELM02 (SYNCHRONIZER)	P03		
			1	27	4	4				TO CONN. PARALLEL REMOTE CONTR.	P04		
BR-REC			1	23	8	9			B	CONN. PARALLEL REMOTE CONTROL	J07		
			1	25	2	9			B	CONNECTOR SYNCHRONIZER CONTROL	J02		
			1	25	3	9			B	CONN. PARALLEL REMOTE CONTROL	J03		
			1	27	3	17				TO GRP25, ELM02 (SYNCHRONIZER)	P03		
			1	27	4	17				TO CONN. PARALLEL REMOTE CONTR.	P04		
BR-REW			1	23	8	2			B	CONN. PARALLEL REMOTE CONTROL	J07		
			1	25	2	2			B	CONNECTOR SYNCHRONIZER CONTROL	J02		
			1	25	3	2			B	CONN. PARALLEL REMOTE CONTROL	J03		
			1	27	3	3				TO GRP25, ELM02 (SYNCHRONIZER)	P03		
			1	27	4	3				TO CONN. PARALLEL REMOTE CONTR.	P04		
BR-STOP			1	23	8	16			B	CONN. PARALLEL REMOTE CONTROL	J07		
			1	25	2	16			B	CONNECTOR SYNCHRONIZER CONTROL	J02		
			1	25	3	16			B	CONN. PARALLEL REMOTE CONTROL	J03		
			1	27	3	6				TO GRP25, ELM02 (SYNCHRONIZER)	P03		
			1	27	4	6				TO CONN. PARALLEL REMOTE CONTR.	P04		
BR-VRSPD			1	23	8	4			B	CONN. PARALLEL REMOTE CONTROL	J07		
			1	25	2	4			B	CONNECTOR SYNCHRONIZER CONTROL	J02		
			1	25	3	4			B	CONN. PARALLEL REMOTE CONTROL	J03		
			1	27	3	7				TO GRP25, ELM02 (SYNCHRONIZER)	P03		
			1	27	4	7				TO CONN. PARALLEL REMOTE CONTR.	P04		
CA-ADR-R			3	1	1	27				LINE AMPLIFIER, CH 1	J01		1.820.715.00
			3	1	2	25A				CONTROLLER INTERNAL NRS CH 1	J02		1.820.815.00
			3	1	3	27				REPRODUCE AMPLIFIER, CH 1	J03		1.820.710.00
			3	1	4	27				RECORD AMPLIFIER, CH 1	J04		1.820.811.00
			3	1	5	27				HF-DRIVER, CH 1	J05		1.820.813.00
			3	1	6	27				LINE AMPLIFIER, CH 2	J06		1.820.715.00
			3	1	7	25A				CONTROLLER INTERNAL NRS CH 2	J07		1.820.815.00
			3	1	8	27				REPRODUCE AMPLIFIER, CH 2	J08		1.820.710.00
			3	1	9	27				RECORD AMPLIFIER, CH 2	J09		1.820.811.00
			3	1	10	27				HF-DRIVER, CH 2	J10		1.820.813.00
			3	1	11	27				LINE AMPLIFIER, CH 3	J11		1.820.715.00
			3	1	12	25A				CONTROLLER INTERNAL NRS CH 3	J12		1.820.815.00
			3	1	13	27				REPRODUCE AMPLIFIER, CH 3	J13		1.820.710.00
			3	1	14	27				RECORD AMPLIFIER, CH 3	J14		1.820.811.00
			3	1	15	27				HF-DRIVER, CH 3	J15		1.820.813.00
			3	1	16	27				LINE AMPLIFIER, CH 4	J16		1.820.715.00
			3	1	17	25A				CONTROLLER INTERNAL NRS CH 4	J17		1.820.815.00
			3	1	18	27				REPRODUCE AMPLIFIER, CH 4	J18		1.820.710.00
			3	1	19	27				RECORD AMPLIFIER, CH 4	J19		1.820.811.00
			3	1	20	27				HF-DRIVER, CH 4	J20		1.820.813.00
			3	1	21	21A				BUS CONVERTER	J21		1.820.717.00

SIGNAL NAME	COLOR	MI	ASY	GRP	ELM	PNT	S	LV	TYPE	DESCRIPTION OF ELEMENT		REMARK	ELEMENT NR.
<<-- CONT.OF			3	2	1	27				LINE AMPLIFIER, CH 5	J01		1.820.715.00
CA-ADR-R			3	2	2	25A				CONTROLLER INTERNAL NRS CH 5	J02		1.820.815.00
			3	2	3	27				REPRODUCE AMPLIFIER, CH 5	J03		1.820.710.00
			3	2	4	27				RECORD AMPLIFIER, CH 5	J04		1.820.811.00
			3	2	5	27				HF-DRIVER, CH 5	J05		1.820.813.00
			3	2	6	27				LINE AMPLIFIER, CH 6	J06		1.820.715.00
			3	2	7	25A				CONTROLLER INTERNAL NRS CH 6	J07		1.820.815.00
			3	2	8	27				REPRODUCE AMPLIFIER, CH 6	J08		1.820.710.00
			3	2	9	27				RECORD AMPLIFIER, CH 6	J09		1.820.811.00
			3	2	10	27				HF-DRIVER, CH 6	J10		1.820.813.00
			3	2	11	27				LINE AMPLIFIER, CH 7	J11		1.820.715.00
			3	2	12	25A				CONTROLLER INTERNAL NRS CH 7	J12		1.820.815.00
			3	2	13	27				REPRODUCE AMPLIFIER, CH 7	J13		1.820.710.00
			3	2	14	27				RECORD AMPLIFIER, CH 7	J14		1.820.811.00
			3	2	15	27				HF-DRIVER, CH 7	J15		1.820.813.00
			3	2	16	27				LINE AMPLIFIER, CH 8	J16		1.820.715.00
			3	2	17	25A				CONTROLLER INTERNAL NRS CH 8	J17		1.820.815.00
			3	2	18	27				REPRODUCE AMPLIFIER, CH 8	J18		1.820.710.00
			3	2	19	27				RECORD AMPLIFIER, CH 8	J19		1.820.811.00
			3	2	20	27				HF-DRIVER, CH 8	J20		1.820.813.00
			3	2	21	21A				BUS CONVERTER	J21		1.820.717.00
			4	1	1	27				LINE AMPLIFIER, CH 9	J01		1.820.715.00
			4	1	2	25A				CONTROLLER INTERNAL NRS CH 9	J02		1.820.815.00
			4	1	3	27				REPRODUCE AMPLIFIER, CH 9	J03		1.820.710.00
			4	1	4	27				RECORD AMPLIFIER, CH 9	J04		1.820.811.00
			4	1	5	27				HF-DRIVER, CH 9	J05		1.820.813.00
			4	1	6	27				LINE AMPLIFIER, CH10	J06		1.820.715.00
			4	1	7	25A				CONTROLLER INTERNAL NRS CH10	J07		1.820.815.00
			4	1	8	27				REPRODUCE AMPLIFIER, CH10	J08		1.820.710.00
			4	1	9	27				RECORD AMPLIFIER, CH10	J09		1.820.811.00
			4	1	10	27				HF-DRIVER, CH10	J10		1.820.813.00
			4	1	11	27				LINE AMPLIFIER, CH11	J11		1.820.715.00
			4	1	12	25A				CONTROLLER INTERNAL NRS CH11	J12		1.820.815.00
			4	1	13	27				REPRODUCE AMPLIFIER, CH11	J13		1.820.710.00
			4	1	14	27				RECORD AMPLIFIER, CH11	J14		1.820.811.00
			4	1	15	27				HF-DRIVER, CH11	J15		1.820.813.00
			4	1	16	27				LINE AMPLIFIER, CH12	J16		1.820.715.00
			4	1	17	25A				CONTROLLER INTERNAL NRS CH12	J17		1.820.815.00
			4	1	18	27				REPRODUCE AMPLIFIER, CH12	J18		1.820.710.00
			4	1	19	27				RECORD AMPLIFIER, CH12	J19		1.820.811.00
			4	1	20	27				HF-DRIVER, CH12	J20		1.820.813.00
			4	1	21	21A				BUS CONVERTER	J21		1.820.717.00
			4	2	1	27				LINE AMPLIFIER, CH13	J01		1.820.715.00
			4	2	2	25A				CONTROLLER INTERNAL NRS CH13	J02		1.820.815.00
			4	2	3	27				REPRODUCE AMPLIFIER, CH13	J03		1.820.710.00
			4	2	4	27				RECORD AMPLIFIER, CH13	J04		1.820.811.00
			4	2	5	27				HF-DRIVER, CH13	J05		1.820.813.00
			4	2	6	27				LINE AMPLIFIER, CH14	J06		1.820.715.00
			4	2	7	25A				CONTROLLER INTERNAL NRS CH14	J07		1.820.815.00
			4	2	8	27				REPRODUCE AMPLIFIER, CH14	J08		1.820.710.00
			4	2	9	27				RECORD AMPLIFIER, CH14	J09		1.820.811.00
			4	2	10	27				HF-DRIVER, CH14	J10		1.820.813.00
			4	2	11	27				LINE AMPLIFIER, CH15	J11		1.820.715.00
			4	2	12	25A				CONTROLLER INTERNAL NRS CH15	J12		1.820.815.00

WILLI STUDER AG	S I G N A L W I R E L I S T	89/07/20	9:25	P A G E 83
	* TAPE TRANSPORT & AUDIO MCH *	89/04/19 - 00		

SIGNAL NAME	COLOR	MI	ASY	GRP	ELM	PNT	S	LV	TYPE	DESCRIPTION OF ELEMENT		REMARK	ELEMENT NR.
<<-- CONT.OF			4	2	13	27				REPRODUCE AMPLIFIER, CH15	J13		1.820.710.00
CA-ADR-R			4	2	14	27				RECORD AMPLIFIER, CH15	J14		1.820.811.00
			4	2	15	27				HF-DRIVER, CH15	J15		1.820.813.00
			4	2	16	27				LINE AMPLIFIER, CH16	J16		1.820.715.00
			4	2	17	25A				CONTROLLER INTERNAL NRS CH16	J17		1.820.815.00
			4	2	18	27				REPRODUCE AMPLIFIER, CH16	J18		1.820.710.00
			4	2	19	27				RECORD AMPLIFIER, CH16	J19		1.820.811.00
			4	2	20	27				HF-DRIVER, CH16	J20		1.820.813.00
			4	2	21	21A				BUS CONVERTER	J21		1.820.717.00
			5	1	1	27				LINE AMPLIFIER, CH17	J01		1.820.715.00
			5	1	2	25A				CONTROLLER INTERNAL NRS CH17	J02		1.820.815.00
			5	1	3	27				REPRODUCE AMPLIFIER, CH17	J03		1.820.710.00
			5	1	4	27				RECORD AMPLIFIER, CH17	J04		1.820.811.00
			5	1	5	27				HF-DRIVER, CH17	J05		1.820.813.00
			5	1	6	27				LINE AMPLIFIER, CH18	J06		1.820.715.00
			5	1	7	25A				CONTROLLER INTERNAL NRS CH18	J07		1.820.815.00
			5	1	8	27				REPRODUCE AMPLIFIER, CH18	J08		1.820.710.00
			5	1	9	27				RECORD AMPLIFIER, CH18	J09		1.820.811.00
			5	1	10	27				HF-DRIVER, CH18	J10		1.820.813.00
			5	1	11	27				LINE AMPLIFIER, CH19	J11		1.820.715.00
			5	1	12	25A				CONTROLLER INTERNAL NRS CH19	J12		1.820.815.00
			5	1	13	27				REPRODUCE AMPLIFIER, CH19	J13		1.820.710.00
			5	1	14	27				RECORD AMPLIFIER, CH19	J14		1.820.811.00
			5	1	15	27				HF-DRIVER, CH19	J15		1.820.813.00
			5	1	16	27				LINE AMPLIFIER, CH20	J16		1.820.715.00
			5	1	17	25A				CONTROLLER INTERNAL NRS CH20	J17		1.820.815.00
			5	1	18	27				REPRODUCE AMPLIFIER, CH20	J18		1.820.710.00
			5	1	19	27				RECORD AMPLIFIER, CH20	J19		1.820.811.00
			5	1	20	27				HF-DRIVER, CH20	J20		1.820.813.00
			5	1	21	21A				BUS CONVERTER	J21		1.820.717.00
			5	2	1	27				LINE AMPLIFIER, CH21	J01		1.820.715.00
			5	2	2	25A				CONTROLLER INTERNAL NRS CH21	J02		1.820.815.00
			5	2	3	27				REPRODUCE AMPLIFIER, CH21	J03		1.820.710.00
			5	2	4	27				RECORD AMPLIFIER, CH21	J04		1.820.811.00
			5	2	5	27				HF-DRIVER, CH21	J05		1.820.813.00
			5	2	6	27				LINE AMPLIFIER, CH22	J06		1.820.715.00
			5	2	7	25A				CONTROLLER INTERNAL NRS CH22	J07		1.820.815.00
			5	2	8	27				REPRODUCE AMPLIFIER, CH22	J08		1.820.710.00
			5	2	9	27				RECORD AMPLIFIER, CH22	J09		1.820.811.00
			5	2	10	27				HF-DRIVER, CH22	J10		1.820.813.00
			5	2	11	27				LINE AMPLIFIER, CH23	J11		1.820.715.00
			5	2	12	25A				CONTROLLER INTERNAL NRS CH23	J12		1.820.815.00
			5	2	13	27				REPRODUCE AMPLIFIER, CH23	J13		1.820.710.00
			5	2	14	27				RECORD AMPLIFIER, CH23	J14		1.820.811.00
			5	2	15	27				HF-DRIVER, CH23	J15		1.820.813.00
			5	2	16	27				LINE AMPLIFIER, CH24	J16		1.820.715.00
			5	2	17	25A				CONTROLLER INTERNAL NRS CH24	J17		1.820.815.00
			5	2	18	27				REPRODUCE AMPLIFIER, CH24	J18		1.820.710.00
			5	2	19	27				RECORD AMPLIFIER, CH24	J19		1.820.811.00
			5	2	20	27				HF-DRIVER, CH24	J20		1.820.813.00
			5	2	21	21A				BUS CONVERTER	J21		1.820.717.00

WILLI STUDER AG	S I G N A L W I R E L I S T	89/07/20	9:25	P A G E 84
	* TAPE TRANSPORT & AUDIO MCH *	89/04/19 - 00		

SIGNAL NAME	COLOR	MI	ASY	GRP	ELM	PNT	S	LV	TYPE	DESCRIPTION OF ELEMENT		REMARK	ELEMENT NR.
CA-ADR-S			3	1	1	28				LINE AMPLIFIER, CH 1	J01		1.820.715.00
			3	1	2	25B				CONTROLLER INTERNAL NRS CH 1	J02		1.820.815.00
			3	1	3	28				REPRODUCE AMPLIFIER, CH 1	J03		1.820.710.00
			3	1	4	28				RECORD AMPLIFIER, CH 1	J04		1.820.811.00
			3	1	5	28				HF-DRIVER, CH 1	J05		1.820.813.00
			3	1	6	28				LINE AMPLIFIER, CH 2	J06		1.820.715.00
			3	1	7	25B				CONTROLLER INTERNAL NRS CH 2	J07		1.820.815.00
			3	1	8	28				REPRODUCE AMPLIFIER, CH 2	J08		1.820.710.00
			3	1	9	28				RECORD AMPLIFIER, CH 2	J09		1.820.811.00
			3	1	10	28				HF-DRIVER, CH 2	J10		1.820.813.00
			3	1	11	28				LINE AMPLIFIER, CH 3	J11		1.820.715.00
			3	1	12	25B				CONTROLLER INTERNAL NRS CH 3	J12		1.820.815.00
			3	1	13	28				REPRODUCE AMPLIFIER, CH 3	J13		1.820.710.00
			3	1	14	28				RECORD AMPLIFIER, CH 3	J14		1.820.811.00
			3	1	15	28				HF-DRIVER, CH 3	J15		1.820.813.00
			3	1	16	28				LINE AMPLIFIER, CH 4	J16		1.820.715.00
			3	1	17	25B				CONTROLLER INTERNAL NRS CH 4	J17		1.820.815.00
			3	1	18	28				REPRODUCE AMPLIFIER, CH 4	J18		1.820.710.00
			3	1	19	28				RECORD AMPLIFIER, CH 4	J19		1.820.811.00
			3	1	20	28				HF-DRIVER, CH 4	J20		1.820.813.00
			3	1	21	21B				BUS CONVERTER	J21		1.820.717.00
			3	2	1	28				LINE AMPLIFIER, CH 5	J01		1.820.715.00
			3	2	2	25B				CONTROLLER INTERNAL NRS CH 5	J02		1.820.815.00
			3	2	3	28				REPRODUCE AMPLIFIER, CH 5	J03		1.820.710.00
			3	2	4	28				RECORD AMPLIFIER, CH 5	J04		1.820.811.00
			3	2	5	28				HF-DRIVER, CH 5	J05		1.820.813.00
			3	2	6	28				LINE AMPLIFIER, CH 6	J06		1.820.715.00
			3	2	7	25B				CONTROLLER INTERNAL NRS CH 6	J07		1.820.815.00
			3	2	8	28				REPRODUCE AMPLIFIER, CH 6	J08		1.820.710.00
			3	2	9	28				RECORD AMPLIFIER, CH 6	J09		1.820.811.00
			3	2	10	28				HF-DRIVER, CH 6	J10		1.820.813.00
			3	2	11	28				LINE AMPLIFIER, CH 7	J11		1.820.715.00
			3	2	12	25B				CONTROLLER INTERNAL NRS CH 7	J12		1.820.815.00
			3	2	13	28				REPRODUCE AMPLIFIER, CH 7	J13		1.820.710.00
			3	2	14	28				RECORD AMPLIFIER, CH 7	J14		1.820.811.00
			3	2	15	28				HF-DRIVER, CH 7	J15		1.820.813.00
			3	2	16	28				LINE AMPLIFIER, CH 8	J16		1.820.715.00
			3	2	17	25B				CONTROLLER INTERNAL NRS CH 8	J17		1.820.815.00
			3	2	18	28				REPRODUCE AMPLIFIER, CH 8	J18		1.820.710.00
			3	2	19	28				RECORD AMPLIFIER, CH 8	J19		1.820.811.00
			3	2	20	28				HF-DRIVER, CH 8	J20		1.820.813.00
			3	2	21	21B				BUS CONVERTER	J21		1.820.717.00
			4	1	1	28				LINE AMPLIFIER, CH 9	J01		1.820.715.00
			4	1	2	25B				CONTROLLER INTERNAL NRS CH 9	J02		1.820.815.00
			4	1	3	28				REPRODUCE AMPLIFIER, CH 9	J03		1.820.710.00
			4	1	4	28				RECORD AMPLIFIER, CH 9	J04		1.820.811.00
			4	1	5	28				HF-DRIVER, CH 9	J05		1.820.813.00
			4	1	6	28				LINE AMPLIFIER, CH10	J06		1.820.715.00
			4	1	7	25B				CONTROLLER INTERNAL NRS CH10	J07		1.820.815.00
			4	1	8	28				REPRODUCE AMPLIFIER, CH10	J08		1.820.710.00
			4	1	9	28				RECORD AMPLIFIER, CH10	J09		1.820.811.00
			4	1	10	28				HF-DRIVER, CH10	J10		1.820.813.00
			4	1	11	28				LINE AMPLIFIER, CH11	J11		1.820.715.00
			4	1	12	25B				CONTROLLER INTERNAL NRS CH11	J12		1.820.815.00
			4	1	13	28				REPRODUCE AMPLIFIER, CH11	J13		1.820.710.00

WILLI STUDER AG * S I G N A L W I R E L I S T * 89/07/20 * 9:25 * P A G E 85

* TAPE TRANSPORT & AUDIO MCH * * 89/04/19 - 00

SIGNAL NAME	COLOR	MI	ASY	GRP	ELM	PNT	S	LV	TYPE	DESCRIPTION OF ELEMENT		REMARK	ELEMENT NR.
<<-- CONT.OF			4	1	14	28				RECORD AMPLIFIER, CH11	J14		1.820.811.00
CA-ADR-S			4	1	15	28				HF-DRIVER, CH11	J15		1.820.813.00
			4	1	16	28				LINE AMPLIFIER, CH12	J16		1.820.715.00
			4	1	17	25B				CONTROLLER INTERNAL NRS CH12	J17		1.820.815.00
			4	1	18	28				REPRODUCE AMPLIFIER, CH12	J18		1.820.710.00
			4	1	19	28				RECORD AMPLIFIER, CH12	J19		1.820.811.00
			4	1	20	28				HF-DRIVER, CH12	J20		1.820.813.00
			4	1	21	21B				BUS CONVERTER	J21		1.820.717.00
			4	2	1	28				LINE AMPLIFIER, CH13	J01		1.820.715.00
			4	2	2	25B				CONTROLLER INTERNAL NRS CH13	J02		1.820.815.00
			4	2	3	28				REPRODUCE AMPLIFIER, CH13	J03		1.820.710.00
			4	2	4	28				RECORD AMPLIFIER, CH13	J04		1.820.811.00
			4	2	5	28				HF-DRIVER, CH13	J05		1.820.813.00
			4	2	6	28				LINE AMPLIFIER, CH14	J06		1.820.715.00
			4	2	7	25B				CONTROLLER INTERNAL NRS CH14	J07		1.820.815.00
			4	2	8	28				REPRODUCE AMPLIFIER, CH14	J08		1.820.710.00
			4	2	9	28				RECORD AMPLIFIER, CH14	J09		1.820.811.00
			4	2	10	28				HF-DRIVER, CH14	J10		1.820.813.00
			4	2	11	28				LINE AMPLIFIER, CH15	J11		1.820.715.00
			4	2	12	25B				CONTROLLER INTERNAL NRS CH15	J12		1.820.815.00
			4	2	13	28				REPRODUCE AMPLIFIER, CH15	J13		1.820.710.00
			4	2	14	28				RECORD AMPLIFIER, CH15	J14		1.820.811.00
			4	2	15	28				HF-DRIVER, CH15	J15		1.820.813.00
			4	2	16	28				LINE AMPLIFIER, CH16	J16		1.820.715.00
			4	2	17	25B				CONTROLLER INTERNAL NRS CH16	J17		1.820.815.00
			4	2	18	28				REPRODUCE AMPLIFIER, CH16	J18		1.820.710.00
			4	2	19	28				RECORD AMPLIFIER, CH16	J19		1.820.811.00
			4	2	20	28				HF-DRIVER, CH16	J20		1.820.813.00
			4	2	21	21B				BUS CONVERTER	J21		1.820.717.00
			5	1	1	28				LINE AMPLIFIER, CH17	J01		1.820.715.00
			5	1	2	25B				CONTROLLER INTERNAL NRS CH17	J02		1.820.815.00
			5	1	3	28				REPRODUCE AMPLIFIER, CH17	J03		1.820.710.00
			5	1	4	28				RECORD AMPLIFIER, CH17	J04		1.820.811.00
			5	1	5	28				HF-DRIVER, CH17	J05		1.820.813.00
			5	1	6	28				LINE AMPLIFIER, CH18	J06		1.820.715.00
			5	1	7	25B				CONTROLLER INTERNAL NRS CH18	J07		1.820.815.00
			5	1	8	28				REPRODUCE AMPLIFIER, CH18	J08		1.820.710.00
			5	1	9	28				RECORD AMPLIFIER, CH18	J09		1.820.811.00
			5	1	10	28				HF-DRIVER, CH18	J10		1.820.813.00
			5	1	11	28				LINE AMPLIFIER, CH19	J11		1.820.715.00
			5	1	12	25B				CONTROLLER INTERNAL NRS CH19	J12		1.820.815.00
			5	1	13	28				REPRODUCE AMPLIFIER, CH19	J13		1.820.710.00
			5	1	14	28				RECORD AMPLIFIER, CH19	J14		1.820.811.00
			5	1	15	28				HF-DRIVER, CH19	J15		1.820.813.00
			5	1	16	28				LINE AMPLIFIER, CH20	J16		1.820.715.00
			5	1	17	25B				CONTROLLER INTERNAL NRS CH20	J17		1.820.815.00
			5	1	18	28				REPRODUCE AMPLIFIER, CH20	J18		1.820.710.00
			5	1	19	28				RECORD AMPLIFIER, CH20	J19		1.820.811.00
			5	1	20	28				HF-DRIVER, CH20	J20		1.820.813.00
			5	1	21	21B				BUS CONVERTER	J21		1.820.717.00
			5	2	1	28				LINE AMPLIFIER, CH21	J01		1.820.715.00
			5	2	2	25B				CONTROLLER INTERNAL NRS CH21	J02		1.820.815.00
			5	2	3	28				REPRODUCE AMPLIFIER, CH21	J03		1.820.710.00
			5	2	4	28				RECORD AMPLIFIER, CH21	J04		1.820.811.00

WILLI STUDER AG * S I G N A L W I R E L I S T * 89/07/20 * 9:25 * P A G E 86

* TAPE TRANSPORT & AUDIO MCH * * 89/04/19 - 00

SIGNAL NAME	COLOR	MI	ASY	GRP	ELM	PNT	S	LV	TYPE	DESCRIPTION OF ELEMENT		REMARK	ELEMENT NR.
<<-- CONT.OF			5	2	5	28				HF-DRIVER, CH21	J05		1.820.813.00
CA-ADR-S			5	2	6	28				LINE AMPLIFIER, CH22	J06		1.820.715.00
			5	2	7	25B				CONTROLLER INTERNAL NRS CH22	J07		1.820.815.00
			5	2	8	28				REPRODUCE AMPLIFIER, CH22	J08		1.820.710.00
			5	2	9	28				RECORD AMPLIFIER, CH22	J09		1.820.811.00
			5	2	10	28				HF-DRIVER, CH22	J10		1.820.813.00
			5	2	11	28				LINE AMPLIFIER, CH23	J11		1.820.715.00
			5	2	12	25B				CONTROLLER INTERNAL NRS CH23	J12		1.820.815.00
			5	2	13	28				REPRODUCE AMPLIFIER, CH23	J13		1.820.710.00
			5	2	14	28				RECORD AMPLIFIER, CH23	J14		1.820.811.00
			5	2	15	28				HF-DRIVER, CH23	J15		1.820.813.00
			5	2	16	28				LINE AMPLIFIER, CH24	J16		1.820.715.00
			5	2	17	25B				CONTROLLER INTERNAL NRS CH24	J17		1.820.815.00
			5	2	18	28				REPRODUCE AMPLIFIER, CH24	J18		1.820.710.00
			5	2	19	28				RECORD AMPLIFIER, CH24	J19		1.820.811.00
			5	2	20	28				HF-DRIVER, CH24	J20		1.820.813.00
			5	2	21	21B				BUS CONVERTER	J21		1.820.717.00
CA-ADR-T			3	1	1	29				LINE AMPLIFIER, CH 1	J01		1.820.715.00
			3	1	2	26A				CONTROLLER INTERNAL NRS CH 1	J02		1.820.815.00
			3	1	3	29				REPRODUCE AMPLIFIER, CH 1	J03		1.820.710.00
			3	1	4	29				RECORD AMPLIFIER, CH 1	J04		1.820.811.00
			3	1	5	29				HF-DRIVER, CH 1	J05		1.820.813.00
			3	1	6	29				LINE AMPLIFIER, CH 2	J06		1.820.715.00
			3	1	7	26A				CONTROLLER INTERNAL NRS CH 2	J07		1.820.815.00
			3	1	8	29				REPRODUCE AMPLIFIER, CH 2	J08		1.820.710.00
			3	1	9	29				RECORD AMPLIFIER, CH 2	J09		1.820.811.00
			3	1	10	29				HF-DRIVER, CH 2	J10		1.820.813.00
			3	1	11	29				LINE AMPLIFIER, CH 3	J11		1.820.715.00
			3	1	12	26A				CONTROLLER INTERNAL NRS CH 3	J12		1.820.815.00
			3	1	13	29				REPRODUCE AMPLIFIER, CH 3	J13		1.820.710.00
			3	1	14	29				RECORD AMPLIFIER, CH 3	J14		1.820.811.00
			3	1	15	29				HF-DRIVER, CH 3	J15		1.820.813.00
			3	1	16	29				LINE AMPLIFIER, CH 4	J16		1.820.715.00
			3	1	17	26A				CONTROLLER INTERNAL NRS CH 4	J17		1.820.815.00
			3	1	18	29				REPRODUCE AMPLIFIER, CH 4	J18		1.820.710.00
			3	1	19	29				RECORD AMPLIFIER, CH 4	J19		1.820.811.00
			3	1	20	29				HF-DRIVER, CH 4	J20		1.820.813.00
			3	1	21	22A				BUS CONVERTER	J21		1.820.717.00
			3	2	1	29				LINE AMPLIFIER, CH 5	J01		1.820.715.00
			3	2	2	26A				CONTROLLER INTERNAL NRS CH 5	J02		1.820.815.00
			3	2	3	29				REPRODUCE AMPLIFIER, CH 5	J03		1.820.710.00
			3	2	4	29				RECORD AMPLIFIER, CH 5	J04		1.820.811.00
			3	2	5	29				HF-DRIVER, CH 5	J05		1.820.813.00
			3	2	6	29				LINE AMPLIFIER, CH 6	J06		1.820.715.00
			3	2	7	26A				CONTROLLER INTERNAL NRS CH 6	J07		1.820.815.00
			3	2	8	29				REPRODUCE AMPLIFIER, CH 6	J08		1.820.710.00
			3	2	9	29				RECORD AMPLIFIER, CH 6	J09		1.820.811.00
			3	2	10	29				HF-DRIVER, CH 6	J10		1.820.813.00
			3	2	11	29				LINE AMPLIFIER, CH 7	J11		1.820.715.00
			3	2	12	26A				CONTROLLER INTERNAL NRS CH 7	J12		1.820.815.00
			3	2	13	29				REPRODUCE AMPLIFIER, CH 7	J13		1.820.710.00
			3	2	14	29				RECORD AMPLIFIER, CH 7	J14		1.820.811.00
			3	2	15	29				HF-DRIVER, CH 7	J15		1.820.813.00

```
*    WILLI STUDER AG   *    S I G N A L     W I R E     L I S T              * 89/07/20  *   9:25  *   P A G E  87   *
*                           * TAPE TRANSPORT & AUDIO MCH *                    * 89/04/19 - 00                          *
```

SIGNAL NAME	COLOR	MI	ASY	GRP	ELM	PNT	S	LV	TYPE	DESCRIPTION OF ELEMENT		REMARK	ELEMENT NR.
<<-- CONT.OF			3	2	16	29				LINE AMPLIFIER, CH 8	J16		1.820.715.00
CA-ADR-T			3	2	17	26A				CONTROLLER INTERNAL NRS CH 8	J17		1.820.815.00
			3	2	18	29				REPRODUCE AMPLIFIER, CH 8	J18		1.820.710.00
			3	2	19	29				RECORD AMPLIFIER, CH 8	J19		1.820.811.00
			3	2	20	29				HF-DRIVER, CH 8	J20		1.820.813.00
			3	2	21	22A				BUS CONVERTER	J21		1.820.717.00
			4	1	1	29				LINE AMPLIFIER, CH 9	J01		1.820.715.00
			4	1	2	26A				CONTROLLER INTERNAL NRS CH 9	J02		1.820.815.00
			4	1	3	29				REPRODUCE AMPLIFIER, CH 9	J03		1.820.710.00
			4	1	4	29				RECORD AMPLIFIER, CH 9	J04		1.820.811.00
			4	1	5	29				HF-DRIVER, CH 9	J05		1.820.813.00
			4	1	6	29				LINE AMPLIFIER, CH10	J06		1.820.715.00
			4	1	7	26A				CONTROLLER INTERNAL NRS CH10	J07		1.820.815.00
			4	1	8	29				REPRODUCE AMPLIFIER, CH10	J08		1.820.710.00
			4	1	9	29				RECORD AMPLIFIER, CH10	J09		1.820.811.00
			4	1	10	29				HF-DRIVER, CH10	J10		1.820.813.00
			4	1	11	29				LINE AMPLIFIER, CH11	J11		1.820.715.00
			4	1	12	26A				CONTROLLER INTERNAL NRS CH11	J12		1.820.815.00
			4	1	13	29				REPRODUCE AMPLIFIER, CH11	J13		1.820.710.00
			4	1	14	29				RECORD AMPLIFIER, CH11	J14		1.820.811.00
			4	1	15	29				HF-DRIVER, CH11	J15		1.820.813.00
			4	1	16	29				LINE AMPLIFIER, CH12	J16		1.820.715.00
			4	1	17	26A				CONTROLLER INTERNAL NRS CH12	J17		1.820.815.00
			4	1	18	29				REPRODUCE AMPLIFIER, CH12	J18		1.820.710.00
			4	1	19	29				RECORD AMPLIFIER, CH12	J19		1.820.811.00
			4	1	20	29				HF-DRIVER, CH12	J20		1.820.813.00
			4	1	21	22A				BUS CONVERTER	J21		1.820.717.00
			4	2	1	29				LINE AMPLIFIER, CH13	J01		1.820.715.00
			4	2	2	26A				CONTROLLER INTERNAL NRS CH13	J02		1.820.815.00
			4	2	3	29				REPRODUCE AMPLIFIER, CH13	J03		1.820.710.00
			4	2	4	29				RECORD AMPLIFIER, CH13	J04		1.820.811.00
			4	2	5	29				HF-DRIVER, CH13	J05		1.820.813.00
			4	2	6	29				LINE AMPLIFIER, CH14	J06		1.820.715.00
			4	2	7	26A				CONTROLLER INTERNAL NRS CH14	J07		1.820.815.00
			4	2	8	29				REPRODUCE AMPLIFIER, CH14	J08		1.820.710.00
			4	2	9	29				RECORD AMPLIFIER, CH14	J09		1.820.811.00
			4	2	10	29				HF-DRIVER, CH14	J10		1.820.813.00
			4	2	11	29				LINE AMPLIFIER, CH15	J11		1.820.715.00
			4	2	12	26A				CONTROLLER INTERNAL NRS CH15	J12		1.820.815.00
			4	2	13	29				REPRODUCE AMPLIFIER, CH15	J13		1.820.710.00
			4	2	14	29				RECORD AMPLIFIER, CH15	J14		1.820.811.00
			4	2	15	29				HF-DRIVER, CH15	J15		1.820.813.00
			4	2	16	29				LINE AMPLIFIER, CH16	J16		1.820.715.00
			4	2	17	26A				CONTROLLER INTERNAL NRS CH16	J17		1.820.815.00
			4	2	18	29				REPRODUCE AMPLIFIER, CH16	J18		1.820.710.00
			4	2	19	29				RECORD AMPLIFIER, CH16	J19		1.820.811.00
			4	2	20	29				HF-DRIVER, CH16	J20		1.820.813.00
			4	2	21	22A				BUS CONVERTER	J21		1.820.717.00
			5	1	1	29				LINE AMPLIFIER, CH17	J01		1.820.715.00
			5	1	2	26A				CONTROLLER INTERNAL NRS CH17	J02		1.820.815.00
			5	1	3	29				REPRODUCE AMPLIFIER, CH17	J03		1.820.710.00
			5	1	4	29				RECORD AMPLIFIER, CH17	J04		1.820.811.00
			5	1	5	29				HF-DRIVER, CH17	J05		1.820.813.00
			5	1	6	29				LINE AMPLIFIER, CH18	J06		1.820.715.00

```
*    WILLI STUDER AG   *    S I G N A L     W I R E     L I S T              * 89/07/20  *   9:25  *   P A G E  88   *
*                           * TAPE TRANSPORT & AUDIO MCH *                    * 89/04/19 - 00                          *
```

SIGNAL NAME	COLOR	MI	ASY	GRP	ELM	PNT	S	LV	TYPE	DESCRIPTION OF ELEMENT		REMARK	ELEMENT NR.
<<-- CONT.OF			5	1	7	26A				CONTROLLER INTERNAL NRS CH18	J07		1.820.815.00
CA-ADR-T			5	1	8	29				REPRODUCE AMPLIFIER, CH18	J08		1.820.710.00
			5	1	9	29				RECORD AMPLIFIER, CH18	J09		1.820.811.00
			5	1	10	29				HF-DRIVER, CH18	J10		1.820.813.00
			5	1	11	29				LINE AMPLIFIER, CH19	J11		1.820.715.00
			5	1	12	26A				CONTROLLER INTERNAL NRS CH19	J12		1.820.815.00
			5	1	13	29				REPRODUCE AMPLIFIER, CH19	J13		1.820.710.00
			5	1	14	29				RECORD AMPLIFIER, CH19	J14		1.820.811.00
			5	1	15	29				HF-DRIVER, CH19	J15		1.820.813.00
			5	1	16	29				LINE AMPLIFIER, CH20	J16		1.820.715.00
			5	1	17	26A				CONTROLLER INTERNAL NRS CH20	J17		1.820.815.00
			5	1	18	29				REPRODUCE AMPLIFIER, CH20	J18		1.820.710.00
			5	1	19	29				RECORD AMPLIFIER, CH20	J19		1.820.811.00
			5	1	20	29				HF-DRIVER, CH20	J20		1.820.813.00
			5	1	21	22A				BUS CONVERTER	J21		1.820.717.00
			5	2	1	29				LINE AMPLIFIER, CH21	J01		1.820.715.00
			5	2	2	26A				CONTROLLER INTERNAL NRS CH21	J02		1.820.815.00
			5	2	3	29				REPRODUCE AMPLIFIER, CH21	J03		1.820.710.00
			5	2	4	29				RECORD AMPLIFIER, CH21	J04		1.820.811.00
			5	2	5	29				HF-DRIVER, CH21	J05		1.820.813.00
			5	2	6	29				LINE AMPLIFIER, CH22	J06		1.820.715.00
			5	2	7	26A				CONTROLLER INTERNAL NRS CH22	J07		1.820.815.00
			5	2	8	29				REPRODUCE AMPLIFIER, CH22	J08		1.820.710.00
			5	2	9	29				RECORD AMPLIFIER, CH22	J09		1.820.811.00
			5	2	10	29				HF-DRIVER, CH22	J10		1.820.813.00
			5	2	11	29				LINE AMPLIFIER, CH23	J11		1.820.715.00
			5	2	12	26A				CONTROLLER INTERNAL NRS CH23	J12		1.820.815.00
			5	2	13	29				REPRODUCE AMPLIFIER, CH23	J13		1.820.710.00
			5	2	14	29				RECORD AMPLIFIER, CH23	J14		1.820.811.00
			5	2	15	29				HF-DRIVER, CH23	J15		1.820.813.00
			5	2	16	29				LINE AMPLIFIER, CH24	J16		1.820.715.00
			5	2	17	26A				CONTROLLER INTERNAL NRS CH24	J17		1.820.815.00
			5	2	18	29				REPRODUCE AMPLIFIER, CH24	J18		1.820.710.00
			5	2	19	29				RECORD AMPLIFIER, CH24	J19		1.820.811.00
			5	2	20	29				HF-DRIVER, CH24	J20		1.820.813.00
			5	2	21	22A				BUS CONVERTER	J21		1.820.717.00
CA-ADR-U			3	1	1	30				LINE AMPLIFIER, CH 1	J01		1.820.715.00
			3	1	2	26B				CONTROLLER INTERNAL NRS CH 1	J02		1.820.815.00
			3	1	3	30				REPRODUCE AMPLIFIER, CH 1	J03		1.820.710.00
			3	1	4	30				RECORD AMPLIFIER, CH 1	J04		1.820.811.00
			3	1	5	30				HF-DRIVER, CH 1	J05		1.820.813.00
			3	1	6	30				LINE AMPLIFIER, CH 2	J06		1.820.715.00
			3	1	7	26B				CONTROLLER INTERNAL NRS CH 2	J07		1.820.815.00
			3	1	8	30				REPRODUCE AMPLIFIER, CH 2	J08		1.820.710.00
			3	1	9	30				RECORD AMPLIFIER, CH 2	J09		1.820.811.00
			3	1	10	30				HF-DRIVER, CH 2	J10		1.820.813.00
			3	1	11	30				LINE AMPLIFIER, CH 3	J11		1.820.715.00
			3	1	12	26B				CONTROLLER INTERNAL NRS CH 3	J12		1.820.815.00
			3	1	13	30				REPRODUCE AMPLIFIER, CH 3	J13		1.820.710.00
			3	1	14	30				RECORD AMPLIFIER, CH 3	J14		1.820.811.00
			3	1	15	30				HF-DRIVER, CH 3	J15		1.820.813.00
			3	1	16	30				LINE AMPLIFIER, CH 4	J16		1.820.715.00
			3	1	17	26B				CONTROLLER INTERNAL NRS CH 4	J17		1.820.815.00

SIGNAL NAME	COLOR	MI	ASY	GRP	ELM	PNT	S	LV	TYPE	DESCRIPTION OF ELEMENT		REMARK	ELEMENT NR.
<<-- CONT.OF			3	1	18	30				REPRODUCE AMPLIFIER, CH 4	J18		1.820.710.00
CA-ADR-U			3	1	19	30				RECORD AMPLIFIER, CH 4	J19		1.820.811.00
			3	1	20	30				HF-DRIVER, CH 4	J20		1.820.813.00
			3	1	21	22B				BUS CONVERTER	J21		1.820.717.00
			3	2	1	30				LINE AMPLIFIER, CH 5	J01		1.820.715.00
			3	2	2	26B				CONTROLLER INTERNAL NRS CH 5	J02		1.820.815.00
			3	2	3	30				REPRODUCE AMPLIFIER, CH 5	J03		1.820.710.00
			3	2	4	30				RECORD AMPLIFIER, CH 5	J04		1.820.811.00
			3	2	5	30				HF-DRIVER, CH 5	J05		1.820.813.00
			3	2	6	30				LINE AMPLIFIER, CH 6	J06		1.820.715.00
			3	2	7	26B				CONTROLLER INTERNAL NRS CH 6	J07		1.820.815.00
			3	2	8	30				REPRODUCE AMPLIFIER, CH 6	J08		1.820.710.00
			3	2	9	30				RECORD AMPLIFIER, CH 6	J09		1.820.811.00
			3	2	10	30				HF-DRIVER, CH 6	J10		1.820.813.00
			3	2	11	30				LINE AMPLIFIER, CH 7	J11		1.820.715.00
			3	2	12	26B				CONTROLLER INTERNAL NRS CH 7	J12		1.820.815.00
			3	2	13	30				REPRODUCE AMPLIFIER, CH 7	J13		1.820.710.00
			3	2	14	30				RECORD AMPLIFIER, CH 7	J14		1.820.811.00
			3	2	15	30				HF-DRIVER, CH 7	J15		1.820.813.00
			3	2	16	30				LINE AMPLIFIER, CH 8	J16		1.820.715.00
			3	2	17	26B				CONTROLLER INTERNAL NRS CH 8	J17		1.820.815.00
			3	2	18	30				REPRODUCE AMPLIFIER, CH 8	J18		1.820.710.00
			3	2	19	30				RECORD AMPLIFIER, CH 8	J19		1.820.811.00
			3	2	20	30				HF-DRIVER, CH 8	J20		1.820.813.00
			3	2	21	22B				BUS CONVERTER	J21		1.820.717.00
			4	1	1	30				LINE AMPLIFIER, CH 9	J01		1.820.715.00
			4	1	2	26B				CONTROLLER INTERNAL NRS CH 9	J02		1.820.815.00
			4	1	3	30				REPRODUCE AMPLIFIER, CH 9	J03		1.820.710.00
			4	1	4	30				RECORD AMPLIFIER, CH 9	J04		1.820.811.00
			4	1	5	30				HF-DRIVER, CH 9	J05		1.820.813.00
			4	1	6	30				LINE AMPLIFIER, CH10	J06		1.820.715.00
			4	1	7	26B				CONTROLLER INTERNAL NRS CH10	J07		1.820.815.00
			4	1	8	30				REPRODUCE AMPLIFIER, CH10	J08		1.820.710.00
			4	1	9	30				RECORD AMPLIFIER, CH10	J09		1.820.811.00
			4	1	10	30				HF-DRIVER, CH10	J10		1.820.813.00
			4	1	11	30				LINE AMPLIFIER, CH11	J11		1.820.715.00
			4	1	12	26B				CONTROLLER INTERNAL NRS CH11	J12		1.820.815.00
			4	1	13	30				REPRODUCE AMPLIFIER, CH11	J13		1.820.710.00
			4	1	14	30				RECORD AMPLIFIER, CH11	J14		1.820.811.00
			4	1	15	30				HF-DRIVER, CH11	J15		1.820.813.00
			4	1	16	30				LINE AMPLIFIER, CH12	J16		1.820.715.00
			4	1	17	26B				CONTROLLER INTERNAL NRS CH12	J17		1.820.815.00
			4	1	18	30				REPRODUCE AMPLIFIER, CH12	J18		1.820.710.00
			4	1	19	30				RECORD AMPLIFIER, CH12	J19		1.820.811.00
			4	1	20	30				HF-DRIVER, CH12	J20		1.820.813.00
			4	1	21	22B				BUS CONVERTER	J21		1.820.717.00
			4	2	1	30				LINE AMPLIFIER, CH13	J01		1.820.715.00
			4	2	2	26B				CONTROLLER INTERNAL NRS CH13	J02		1.820.815.00
			4	2	3	30				REPRODUCE AMPLIFIER, CH13	J03		1.820.710.00
			4	2	4	30				RECORD AMPLIFIER, CH13	J04		1.820.811.00
			4	2	5	30				HF-DRIVER, CH13	J05		1.820.813.00
			4	2	6	30				LINE AMPLIFIER, CH14	J06		1.820.715.00
			4	2	7	26B				CONTROLLER INTERNAL NRS CH14	J07		1.820.815.00
			4	2	8	30				REPRODUCE AMPLIFIER, CH14	J08		1.820.710.00

SIGNAL NAME	COLOR	MI	ASY	GRP	ELM	PNT	S	LV	TYPE	DESCRIPTION OF ELEMENT		REMARK	ELEMENT NR.
<<-- CONT.OF			4	2	9	30				RECORD AMPLIFIER, CH14	J09		1.820.811.00
CA-ADR-U			4	2	10	30				HF-DRIVER, CH14	J10		1.820.813.00
			4	2	11	30				LINE AMPLIFIER, CH15	J11		1.820.715.00
			4	2	12	26B				CONTROLLER INTERNAL NRS CH15	J12		1.820.815.00
			4	2	13	30				REPRODUCE AMPLIFIER, CH15	J13		1.820.710.00
			4	2	14	30				RECORD AMPLIFIER, CH15	J14		1.820.811.00
			4	2	15	30				HF-DRIVER, CH15	J15		1.820.813.00
			4	2	16	30				LINE AMPLIFIER, CH16	J16		1.820.715.00
			4	2	17	26B				CONTROLLER INTERNAL NRS CH16	J17		1.820.815.00
			4	2	18	30				REPRODUCE AMPLIFIER, CH16	J18		1.820.710.00
			4	2	19	30				RECORD AMPLIFIER, CH16	J19		1.820.811.00
			4	2	20	30				HF-DRIVER, CH16	J20		1.820.813.00
			4	2	21	22B				BUS CONVERTER	J21		1.820.717.00
			5	1	1	30				LINE AMPLIFIER, CH17	J01		1.820.715.00
			5	1	2	26B				CONTROLLER INTERNAL NRS CH17	J02		1.820.815.00
			5	1	3	30				REPRODUCE AMPLIFIER, CH17	J03		1.820.710.00
			5	1	4	30				RECORD AMPLIFIER, CH17	J04		1.820.811.00
			5	1	5	30				HF-DRIVER, CH17	J05		1.820.813.00
			5	1	6	30				LINE AMPLIFIER, CH18	J06		1.820.715.00
			5	1	7	26B				CONTROLLER INTERNAL NRS CH18	J07		1.820.815.00
			5	1	8	30				REPRODUCE AMPLIFIER, CH18	J08		1.820.710.00
			5	1	9	30				RECORD AMPLIFIER, CH18	J09		1.820.811.00
			5	1	10	30				HF-DRIVER, CH18	J10		1.820.813.00
			5	1	11	30				LINE AMPLIFIER, CH19	J11		1.820.715.00
			5	1	12	26B				CONTROLLER INTERNAL NRS CH19	J12		1.820.815.00
			5	1	13	30				REPRODUCE AMPLIFIER, CH19	J13		1.820.710.00
			5	1	14	30				RECORD AMPLIFIER, CH19	J14		1.820.811.00
			5	1	15	30				HF-DRIVER, CH19	J15		1.820.813.00
			5	1	16	30				LINE AMPLIFIER, CH20	J16		1.820.715.00
			5	1	17	26B				CONTROLLER INTERNAL NRS CH20	J17		1.820.815.00
			5	1	18	30				REPRODUCE AMPLIFIER, CH20	J18		1.820.710.00
			5	1	19	30				RECORD AMPLIFIER, CH20	J19		1.820.811.00
			5	1	20	30				HF-DRIVER, CH20	J20		1.820.813.00
			5	1	21	22B				BUS CONVERTER	J21		1.820.717.00
			5	2	1	30				LINE AMPLIFIER, CH21	J01		1.820.715.00
			5	2	2	26B				CONTROLLER INTERNAL NRS CH21	J02		1.820.815.00
			5	2	3	30				REPRODUCE AMPLIFIER, CH21	J03		1.820.710.00
			5	2	4	30				RECORD AMPLIFIER, CH21	J04		1.820.811.00
			5	2	5	30				HF-DRIVER, CH21	J05		1.820.813.00
			5	2	6	30				LINE AMPLIFIER, CH22	J06		1.820.715.00
			5	2	7	26B				CONTROLLER INTERNAL NRS CH22	J07		1.820.815.00
			5	2	8	30				REPRODUCE AMPLIFIER, CH22	J08		1.820.710.00
			5	2	9	30				RECORD AMPLIFIER, CH22	J09		1.820.811.00
			5	2	10	30				HF-DRIVER, CH22	J10		1.820.813.00
			5	2	11	30				LINE AMPLIFIER, CH23	J11		1.820.715.00
			5	2	12	26B				CONTROLLER INTERNAL NRS CH23	J12		1.820.815.00
			5	2	13	30				REPRODUCE AMPLIFIER, CH23	J13		1.820.710.00
			5	2	14	30				RECORD AMPLIFIER, CH23	J14		1.820.811.00
			5	2	15	30				HF-DRIVER, CH23	J15		1.820.813.00
			5	2	16	30				LINE AMPLIFIER, CH24	J16		1.820.715.00
			5	2	17	26B				CONTROLLER INTERNAL NRS CH24	J17		1.820.815.00
			5	2	18	30				REPRODUCE AMPLIFIER, CH24	J18		1.820.710.00
			5	2	19	30				RECORD AMPLIFIER, CH24	J19		1.820.811.00
			5	2	20	30				HF-DRIVER, CH24	J20		1.820.813.00
			5	2	21	22B				BUS CONVERTER	J21		1.820.717.00

WILLI STUDER AG * S I G N A L W I R E L I S T * 89/07/20 * 9:25 * P A G E 91 *

* TAPE TRANSPORT & AUDIO MCH * * 89/04/19 - 00 *

SIGNAL NAME	COLOR	MI	ASY	GRP	ELM	PNT	S	LV	TYPE	DESCRIPTION OF ELEMENT		REMARK	ELEMENT NR.
CA-BAD01			3	1	4	17				RECORD AMPLIFIER, CH 1	J04		1.820.811.00
			3	1	5	17				HF-DRIVER, CH 1	J05		1.820.813.00
CA-BAD02			3	1	9	17				RECORD AMPLIFIER, CH 2	J09		1.820.811.00
			3	1	10	17				HF-DRIVER, CH 2	J10		1.820.813.00
CA-BAD03			3	1	14	17				RECORD AMPLIFIER, CH 3	J14		1.820.811.00
			3	1	15	17				HF-DRIVER, CH 3	J15		1.820.813.00
CA-BAD04			3	1	19	17				RECORD AMPLIFIER, CH 4	J19		1.820.811.00
			3	1	20	17				HF-DRIVER, CH 4	J20		1.820.813.00
CA-BAD05			3	2	4	17				RECORD AMPLIFIER, CH 5	J04		1.820.811.00
			3	2	5	17				HF-DRIVER, CH 5	J05		1.820.813.00
CA-BAD06			3	2	9	17				RECORD AMPLIFIER, CH 6	J09		1.820.811.00
			3	2	10	17				HF-DRIVER, CH 6	J10		1.820.813.00
CA-BAD07			3	2	14	17				RECORD AMPLIFIER, CH 7	J14		1.820.811.00
			3	2	15	17				HF-DRIVER, CH 7	J15		1.820.813.00
CA-BAD08			3	2	19	17				RECORD AMPLIFIER, CH 8	J19		1.820.811.00
			3	2	20	17				HF-DRIVER, CH 8	J20		1.820.813.00
CA-BAD09			4	1	4	17				RECORD AMPLIFIER, CH 9	J04		1.820.811.00
			4	1	5	17				HF-DRIVER, CH 9	J05		1.820.813.00
CA-BAD10			4	1	9	17				RECORD AMPLIFIER, CH10	J09		1.820.811.00
			4	1	10	17				HF-DRIVER, CH10	J10		1.820.813.00
CA-BAD11			4	1	14	17				RECORD AMPLIFIER, CH11	J14		1.820.811.00
			4	1	15	17				HF-DRIVER, CH11	J15		1.820.813.00
CA-BAD12			4	1	19	17				RECORD AMPLIFIER, CH12	J19		1.820.811.00
			4	1	20	17				HF-DRIVER, CH12	J20		1.820.813.00
CA-BAD13			4	2	4	17				RECORD AMPLIFIER, CH13	J04		1.820.811.00
			4	2	5	17				HF-DRIVER, CH13	J05		1.820.813.00
CA-BAD14			4	2	9	17				RECORD AMPLIFIER, CH14	J09		1.820.811.00
			4	2	10	17				HF-DRIVER, CH14	J10		1.820.813.00
CA-BAD15			4	2	14	17				RECORD AMPLIFIER, CH15	J14		1.820.811.00
			4	2	15	17				HF-DRIVER, CH15	J15		1.820.813.00
CA-BAD16			4	2	19	17				RECORD AMPLIFIER, CH16	J19		1.820.811.00
			4	2	20	17				HF-DRIVER, CH16	J20		1.820.813.00
CA-BAD17			5	1	4	17				RECORD AMPLIFIER, CH17	J04		1.820.811.00
			5	1	5	17				HF-DRIVER, CH17	J05		1.820.813.00
CA-BAD18			5	1	9	17				RECORD AMPLIFIER, CH18	J09		1.820.811.00
			5	1	10	17				HF-DRIVER, CH18	J10		1.820.813.00
CA-BAD19			5	1	14	17				RECORD AMPLIFIER, CH19	J14		1.820.811.00
			5	1	15	17				HF-DRIVER, CH19	J15		1.820.813.00

```
*****************************************************************************************************************************************
*   WILLI STUDER AG   *     S I G N A L     W I R E     L I S T              * 89/07/20  *   9:25  *  P A G E  92   *
*****************************************************************************************************************************************
*                       * TAPE TRANSPORT & AUDIO MCH *                       * 89/04/19 - 00                            *
*****************************************************************************************************************************************
```

SIGNAL NAME	COLOR	MI	ASY	GRP	ELM	PNT	S	LV	TYPE	DESCRIPTION OF ELEMENT		REMARK	ELEMENT NR.
CA-BAD20			5	1	19	17				RECORD AMPLIFIER, CH20	J19		1.820.811.00
			5	1	20	17				HF-DRIVER, CH20	J20		1.820.813.00
CA-BAD21			5	2	4	17				RECORD AMPLIFIER, CH21	J04		1.820.811.00
			5	2	5	17				HF-DRIVER, CH21	J05		1.820.813.00
CA-BAD22			5	2	9	17				RECORD AMPLIFIER, CH22	J09		1.820.811.00
			5	2	10	17				HF-DRIVER, CH22	J10		1.820.813.00
CA-BAD23			5	2	14	17				RECORD AMPLIFIER, CH23	J14		1.820.811.00
			5	2	15	17				HF-DRIVER, CH23	J15		1.820.813.00
CA-BAD24			5	2	19	17				RECORD AMPLIFIER, CH24	J19		1.820.811.00
			5	2	20	17				HF-DRIVER, CH24	J20		1.820.813.00
CA-CHS01			3	1	1	39				LINE AMPLIFIER, CH 1	J01		1.820.715.00
			3	1	2	32A				CONTROLLER INTERNAL NRS CH 1	J02		1.820.815.00
			3	1	3	39				REPRODUCE AMPLIFIER, CH 1	J03		1.820.710.00
			3	1	4	39				RECORD AMPLIFIER, CH 1	J04		1.820.811.00
			3	1	5	39				HF-DRIVER, CH 1	J05		1.820.813.00
			3	1	21	28A				BUS CONVERTER	J21		1.820.717.00
CA-CHS02			3	1	6	39				LINE AMPLIFIER, CH 2	J06		1.820.715.00
			3	1	7	32A				CONTROLLER INTERNAL NRS CH 2	J07		1.820.815.00
			3	1	8	39				REPRODUCE AMPLIFIER, CH 2	J08		1.820.710.00
			3	1	9	39				RECORD AMPLIFIER, CH 2	J09		1.820.811.00
			3	1	10	39				HF-DRIVER, CH 2	J10		1.820.813.00
			3	1	21	28B				BUS CONVERTER	J21		1.820.717.00
CA-CHS03			3	1	11	39				LINE AMPLIFIER, CH 3	J11		1.820.715.00
			3	1	12	32A				CONTROLLER INTERNAL NRS CH 3	J12		1.820.815.00
			3	1	13	39				REPRODUCE AMPLIFIER, CH 3	J13		1.820.710.00
			3	1	14	39				RECORD AMPLIFIER, CH 3	J14		1.820.811.00
			3	1	15	39				HF-DRIVER, CH 3	J15		1.820.813.00
			3	1	21	29A				BUS CONVERTER	J21		1.820.717.00
CA-CHS04			3	1	16	39				LINE AMPLIFIER, CH 4	J16		1.820.715.00
			3	1	17	32A				CONTROLLER INTERNAL NRS CH 4	J17		1.820.815.00
			3	1	18	39				REPRODUCE AMPLIFIER, CH 4	J18		1.820.710.00
			3	1	19	39				RECORD AMPLIFIER, CH 4	J19		1.820.811.00
			3	1	20	39				HF-DRIVER, CH 4	J20		1.820.813.00
			3	1	21	29B				BUS CONVERTER	J21		1.820.717.00
CA-CHS05			3	2	1	39				LINE AMPLIFIER, CH 5	J01		1.820.715.00
			3	2	2	32A				CONTROLLER INTERNAL NRS CH 5	J02		1.820.815.00
			3	2	3	39				REPRODUCE AMPLIFIER, CH 5	J03		1.820.710.00
			3	2	4	39				RECORD AMPLIFIER, CH 5	J04		1.820.811.00
			3	2	5	39				HF-DRIVER, CH 5	J05		1.820.813.00
			3	2	21	28A				BUS CONVERTER	J21		1.820.717.00
CA-CHS06			3	2	6	39				LINE AMPLIFIER, CH 6	J06		1.820.715.00
			3	2	7	32A				CONTROLLER INTERNAL NRS CH 6	J07		1.820.815.00
			3	2	8	39				REPRODUCE AMPLIFIER, CH 6	J08		1.820.710.00
			3	2	9	39				RECORD AMPLIFIER, CH 6	J09		1.820.811.00
			3	2	10	39				HF-DRIVER, CH 6	J10		1.820.813.00
			3	2	21	28B				BUS CONVERTER	J21		1.820.717.00

* WILLI STUDER AG * S I G N A L W I R E L I S T * 89/07/20 * 9:25 * P A G E 93 *

* * TAPE TRANSPORT & AUDIO MCH * * 89/04/19 - 00 *

SIGNAL NAME	COLOR	MI	ASY	GRP	ELM	PNT	S	LV	TYPE	DESCRIPTION OF ELEMENT		REMARK	ELEMENT NR.
CA-CHS07			3	2	11	39				LINE AMPLIFIER, CH 7	J11		1.820.715.00
			3	2	12	32A				CONTROLLER INTERNAL NRS CH 7	J12		1.820.815.00
			3	2	13	39				REPRODUCE AMPLIFIER, CH 7	J13		1.820.710.00
			3	2	14	39				RECORD AMPLIFIER, CH 7	J14		1.820.811.00
			3	2	15	39				HF-DRIVER, CH 7	J15		1.820.813.00
			3	2	21	29A				BUS CONVERTER	J21		1.820.717.00
CA-CHS08			3	2	16	39				LINE AMPLIFIER, CH 8	J16		1.820.715.00
			3	2	17	32A				CONTROLLER INTERNAL NRS CH 8	J17		1.820.815.00
			3	2	18	39				REPRODUCE AMPLIFIER, CH 8	J18		1.820.710.00
			3	2	19	39				RECORD AMPLIFIER, CH 8	J19		1.820.811.00
			3	2	20	39				HF-DRIVER, CH 8	J20		1.820.813.00
			3	2	21	29B				BUS CONVERTER	J21		1.820.717.00
CA-CHS09			4	1	1	39				LINE AMPLIFIER, CH 9	J01		1.820.715.00
			4	1	2	32A				CONTROLLER INTERNAL NRS CH 9	J02		1.820.815.00
			4	1	3	39				REPRODUCE AMPLIFIER, CH 9	J03		1.820.710.00
			4	1	4	39				RECORD AMPLIFIER, CH 9	J04		1.820.811.00
			4	1	5	39				HF-DRIVER, CH 9	J05		1.820.813.00
			4	1	21	28A				BUS CONVERTER	J21		1.820.717.00
CA-CHS10			4	1	6	39				LINE AMPLIFIER, CH10	J06		1.820.715.00
			4	1	7	32A				CONTROLLER INTERNAL NRS CH10	J07		1.820.815.00
			4	1	8	39				REPRODUCE AMPLIFIER, CH10	J08		1.820.710.00
			4	1	9	39				RECORD AMPLIFIER, CH10	J09		1.820.811.00
			4	1	10	39				HF-DRIVER, CH10	J10		1.820.813.00
			4	1	21	28B				BUS CONVERTER	J21		1.820.717.00
CA-CHS11			4	1	11	39				LINE AMPLIFIER, CH11	J11		1.820.715.00
			4	1	12	32A				CONTROLLER INTERNAL NRS CH11	J12		1.820.815.00
			4	1	13	39				REPRODUCE AMPLIFIER, CH11	J13		1.820.710.00
			4	1	14	39				RECORD AMPLIFIER, CH11	J14		1.820.811.00
			4	1	15	39				HF-DRIVER, CH11	J15		1.820.813.00
			4	1	21	29A				BUS CONVERTER	J21		1.820.717.00
CA-CHS12			4	1	16	39				LINE AMPLIFIER, CH12	J16		1.820.715.00
			4	1	17	32A				CONTROLLER INTERNAL NRS CH12	J17		1.820.815.00
			4	1	18	39				REPRODUCE AMPLIFIER, CH12	J18		1.820.710.00
			4	1	19	39				RECORD AMPLIFIER, CH12	J19		1.820.811.00
			4	1	20	39				HF-DRIVER, CH12	J20		1.820.813.00
			4	1	21	29B				BUS CONVERTER	J21		1.820.717.00
CA-CHS13			4	2	1	39				LINE AMPLIFIER, CH13	J01		1.820.715.00
			4	2	2	32A				CONTROLLER INTERNAL NRS CH13	J02		1.820.815.00
			4	2	3	39				REPRODUCE AMPLIFIER, CH13	J03		1.820.710.00
			4	2	4	39				RECORD AMPLIFIER, CH13	J04		1.820.811.00
			4	2	5	39				HF-DRIVER, CH13	J05		1.820.813.00
			4	2	21	28A				BUS CONVERTER	J21		1.820.717.00
CA-CHS14			4	2	6	39				LINE AMPLIFIER, CH14	J06		1.820.715.00
			4	2	7	32A				CONTROLLER INTERNAL NRS CH14	J07		1.820.815.00
			4	2	8	39				REPRODUCE AMPLIFIER, CH14	J08		1.820.710.00
			4	2	9	39				RECORD AMPLIFIER, CH14	J09		1.820.811.00
			4	2	10	39				HF-DRIVER, CH14	J10		1.820.813.00
			4	2	21	28B				BUS CONVERTER	J21		1.820.717.00

* WILLI STUDER AG * S I G N A L W I R E L I S T * 89/07/20 * 9:25 * P A G E 94 *

* * TAPE TRANSPORT & AUDIO MCH * * 89/04/19 - 00 *

SIGNAL NAME	COLOR	MI	ASY	GRP	ELM	PNT	S	LV	TYPE	DESCRIPTION OF ELEMENT		REMARK	ELEMENT NR.
CA-CHS15			4	2	11	39				LINE AMPLIFIER, CH15	J11		1.820.715.00
			4	2	12	32A				CONTROLLER INTERNAL NRS CH15	J12		1.820.815.00
			4	2	13	39				REPRODUCE AMPLIFIER, CH15	J13		1.820.710.00
			4	2	14	39				RECORD AMPLIFIER, CH15	J14		1.820.811.00
			4	2	15	39				HF-DRIVER, CH15	J15		1.820.813.00
			4	2	21	29A				BUS CONVERTER	J21		1.820.717.00
CA-CHS16			4	2	16	39				LINE AMPLIFIER, CH16	J16		1.820.715.00
			4	2	17	32A				CONTROLLER INTERNAL NRS CH16	J17		1.820.815.00
			4	2	18	39				REPRODUCE AMPLIFIER, CH16	J18		1.820.710.00
			4	2	19	39				RECORD AMPLIFIER, CH16	J19		1.820.811.00
			4	2	20	39				HF-DRIVER, CH16	J20		1.820.813.00
			4	2	21	29B				BUS CONVERTER	J21		1.820.717.00
CA-CHS17			5	1	1	39				LINE AMPLIFIER, CH17	J01		1.820.715.00
			5	1	2	32A				CONTROLLER INTERNAL NRS CH17	J02		1.820.815.00
			5	1	3	39				REPRODUCE AMPLIFIER, CH17	J03		1.820.710.00
			5	1	4	39				RECORD AMPLIFIER, CH17	J04		1.820.811.00
			5	1	5	39				HF-DRIVER, CH17	J05		1.820.813.00
			5	1	21	28A				BUS CONVERTER	J21		1.820.717.00
CA-CHS18			5	1	6	39				LINE AMPLIFIER, CH18	J06		1.820.715.00
			5	1	7	32A				CONTROLLER INTERNAL NRS CH18	J07		1.820.815.00
			5	1	8	39				REPRODUCE AMPLIFIER, CH18	J08		1.820.710.00
			5	1	9	39				RECORD AMPLIFIER, CH18	J09		1.820.811.00
			5	1	10	39				HF-DRIVER, CH18	J10		1.820.813.00
			5	1	21	28B				BUS CONVERTER	J21		1.820.717.00
CA-CHS19			5	1	11	39				LINE AMPLIFIER, CH19	J11		1.820.715.00
			5	1	12	32A				CONTROLLER INTERNAL NRS CH19	J12		1.820.815.00
			5	1	13	39				REPRODUCE AMPLIFIER, CH19	J13		1.820.710.00
			5	1	14	39				RECORD AMPLIFIER, CH19	J14		1.820.811.00
			5	1	15	39				HF-DRIVER, CH19	J15		1.820.813.00
			5	1	21	29A				BUS CONVERTER	J21		1.820.717.00
CA-CHS20			5	1	16	39				LINE AMPLIFIER, CH20	J16		1.820.715.00
			5	1	17	32A				CONTROLLER INTERNAL NRS CH20	J17		1.820.815.00
			5	1	18	39				REPRODUCE AMPLIFIER, CH20	J18		1.820.710.00
			5	1	19	39				RECORD AMPLIFIER, CH20	J19		1.820.811.00
			5	1	20	39				HF-DRIVER, CH20	J20		1.820.813.00
			5	1	21	29B				BUS CONVERTER	J21		1.820.717.00
CA-CHS21			5	2	1	39				LINE AMPLIFIER, CH21	J01		1.820.715.00
			5	2	2	32A				CONTROLLER INTERNAL NRS CH21	J02		1.820.815.00
			5	2	3	39				REPRODUCE AMPLIFIER, CH21	J03		1.820.710.00
			5	2	4	39				RECORD AMPLIFIER, CH21	J04		1.820.811.00
			5	2	5	39				HF-DRIVER, CH21	J05		1.820.813.00
			5	2	21	28A				BUS CONVERTER	J21		1.820.717.00
CA-CHS22			5	2	6	39				LINE AMPLIFIER, CH22	J06		1.820.715.00
			5	2	7	32A				CONTROLLER INTERNAL NRS CH22	J07		1.820.815.00
			5	2	8	39				REPRODUCE AMPLIFIER, CH22	J08		1.820.710.00
			5	2	9	39				RECORD AMPLIFIER, CH22	J09		1.820.811.00
			5	2	10	39				HF-DRIVER, CH22	J10		1.820.813.00
			5	2	21	28B				BUS CONVERTER	J21		1.820.717.00

WILLI STUDER AG * SIGNAL WIRE LIST * 89/07/20 * 9:25 * PAGE 95
* TAPE TRANSPORT & AUDIO MCH * * 89/04/19 - 00

SIGNAL NAME	COLOR	MI	ASY	GRP	ELM	PNT	S	LV	TYPE	DESCRIPTION OF ELEMENT		REMARK	ELEMENT NR.
CA-CHS23			5	2	11	39				LINE AMPLIFIER, CH23	J11		1.820.715.00
			5	2	12	32A				CONTROLLER INTERNAL NRS CH23	J12		1.820.815.00
			5	2	13	39				REPRODUCE AMPLIFIER, CH23	J13		1.820.710.00
			5	2	14	39				RECORD AMPLIFIER, CH23	J14		1.820.811.00
			5	2	15	39				HF-DRIVER, CH23	J15		1.820.813.00
			5	2	21	29A				BUS CONVERTER	J21		1.820.717.00
CA-CHS24			5	2	16	39				LINE AMPLIFIER, CH24	J16		1.820.715.00
			5	2	17	32A				CONTROLLER INTERNAL NRS CH24	J17		1.820.815.00
			5	2	18	39				REPRODUCE AMPLIFIER, CH24	J18		1.820.710.00
			5	2	19	39				RECORD AMPLIFIER, CH24	J19		1.820.811.00
			5	2	20	39				HF-DRIVER, CH24	J20		1.820.813.00
			5	2	21	29B				BUS CONVERTER	J21		1.820.717.00
CA-DATA0			3	1	1	31				LINE AMPLIFIER, CH 1	J01		1.820.715.00
			3	1	2	27A				CONTROLLER INTERNAL NRS CH 1	J02		1.820.815.00
			3	1	3	31				REPRODUCE AMPLIFIER, CH 1	J03		1.820.710.00
			3	1	4	31				RECORD AMPLIFIER, CH 1	J04		1.820.811.00
			3	1	5	31				HF-DRIVER, CH 1	J05		1.820.813.00
			3	1	6	31				LINE AMPLIFIER, CH 2	J06		1.820.715.00
			3	1	7	27A				CONTROLLER INTERNAL NRS CH 2	J07		1.820.815.00
			3	1	8	31				REPRODUCE AMPLIFIER, CH 2	J08		1.820.710.00
			3	1	9	31				RECORD AMPLIFIER, CH 2	J09		1.820.811.00
			3	1	10	31				HF-DRIVER, CH 2	J10		1.820.813.00
			3	1	11	31				LINE AMPLIFIER, CH 3	J11		1.820.715.00
			3	1	12	27A				CONTROLLER INTERNAL NRS CH 3	J12		1.820.815.00
			3	1	13	31				REPRODUCE AMPLIFIER, CH 3	J13		1.820.710.00
			3	1	14	31				RECORD AMPLIFIER, CH 3	J14		1.820.811.00
			3	1	15	31				HF-DRIVER, CH 3	J15		1.820.813.00
			3	1	16	31				LINE AMPLIFIER, CH 4	J16		1.820.715.00
			3	1	17	27A				CONTROLLER INTERNAL NRS CH 4	J17		1.820.815.00
			3	1	18	31				REPRODUCE AMPLIFIER, CH 4	J18		1.820.710.00
			3	1	19	31				RECORD AMPLIFIER, CH 4	J19		1.820.811.00
			3	1	20	31				HF-DRIVER, CH 4	J20		1.820.813.00
			3	1	21	23A				BUS CONVERTER	J21		1.820.717.00
			3	2	1	31				LINE AMPLIFIER, CH 5	J01		1.820.715.00
			3	2	2	27A				CONTROLLER INTERNAL NRS CH 5	J02		1.820.815.00
			3	2	3	31				REPRODUCE AMPLIFIER, CH 5	J03		1.820.710.00
			3	2	4	31				RECORD AMPLIFIER, CH 5	J04		1.820.811.00
			3	2	5	31				HF-DRIVER, CH 5	J05		1.820.813.00
			3	2	6	31				LINE AMPLIFIER, CH 6	J06		1.820.715.00
			3	2	7	27A				CONTROLLER INTERNAL NRS CH 6	J07		1.820.815.00
			3	2	8	31				REPRODUCE AMPLIFIER, CH 6	J08		1.820.710.00
			3	2	9	31				RECORD AMPLIFIER, CH 6	J09		1.820.811.00
			3	2	10	31				HF-DRIVER, CH 6	J10		1.820.813.00
			3	2	11	31				LINE AMPLIFIER, CH 7	J11		1.820.715.00
			3	2	12	27A				CONTROLLER INTERNAL NRS CH 7	J12		1.820.815.00
			3	2	13	31				REPRODUCE AMPLIFIER, CH 7	J13		1.820.710.00
			3	2	14	31				RECORD AMPLIFIER, CH 7	J14		1.820.811.00
			3	2	15	31				HF-DRIVER, CH 7	J15		1.820.813.00
			3	2	16	31				LINE AMPLIFIER, CH 8	J16		1.820.715.00
			3	2	17	27A				CONTROLLER INTERNAL NRS CH 8	J17		1.820.815.00
			3	2	18	31				REPRODUCE AMPLIFIER, CH 8	J18		1.820.710.00
			3	2	19	31				RECORD AMPLIFIER, CH 8	J19		1.820.811.00
			3	2	20	31				HF-DRIVER, CH 8	J20		1.820.813.00

WILLI STUDER AG * SIGNAL WIRE LIST * 89/07/20 * 9:25 * PAGE 96
* TAPE TRANSPORT & AUDIO MCH * * 89/04/19 - 00

SIGNAL NAME	COLOR	MI	ASY	GRP	ELM	PNT	S	LV	TYPE	DESCRIPTION OF ELEMENT		REMARK	ELEMENT NR.
<<-- CONT.OF			3	2	21	23A				BUS CONVERTER	J21		1.820.717.00
CA-DATA0			4	1	1	31				LINE AMPLIFIER, CH 9	J01		1.820.715.00
			4	1	2	27A				CONTROLLER INTERNAL NRS CH 9	J02		1.820.815.00
			4	1	3	31				REPRODUCE AMPLIFIER, CH 9	J03		1.820.710.00
			4	1	4	31				RECORD AMPLIFIER, CH 9	J04		1.820.811.00
			4	1	5	31				HF-DRIVER, CH 9	J05		1.820.813.00
			4	1	6	31				LINE AMPLIFIER, CH10	J06		1.820.715.00
			4	1	7	27A				CONTROLLER INTERNAL NRS CH10	J07		1.820.815.00
			4	1	8	31				REPRODUCE AMPLIFIER, CH10	J08		1.820.710.00
			4	1	9	31				RECORD AMPLIFIER, CH10	J09		1.820.811.00
			4	1	10	31				HF-DRIVER, CH10	J10		1.820.813.00
			4	1	11	31				LINE AMPLIFIER, CH11	J11		1.820.715.00
			4	1	12	27A				CONTROLLER INTERNAL NRS CH11	J12		1.820.815.00
			4	1	13	31				REPRODUCE AMPLIFIER, CH11	J13		1.820.710.00
			4	1	14	31				RECORD AMPLIFIER, CH11	J14		1.820.811.00
			4	1	15	31				HF-DRIVER, CH11	J15		1.820.813.00
			4	1	16	31				LINE AMPLIFIER, CH12	J16		1.820.715.00
			4	1	17	27A				CONTROLLER INTERNAL NRS CH12	J17		1.820.815.00
			4	1	18	31				REPRODUCE AMPLIFIER, CH12	J18		1.820.710.00
			4	1	19	31				RECORD AMPLIFIER, CH12	J19		1.820.811.00
			4	1	20	31				HF-DRIVER, CH12	J20		1.820.813.00
			4	1	21	23A				BUS CONVERTER	J21		1.820.717.00
			4	2	1	31				LINE AMPLIFIER, CH13	J01		1.820.715.00
			4	2	2	27A				CONTROLLER INTERNAL NRS CH13	J02		1.820.815.00
			4	2	3	31				REPRODUCE AMPLIFIER, CH13	J03		1.820.710.00
			4	2	4	31				RECORD AMPLIFIER, CH13	J04		1.820.811.00
			4	2	5	31				HF-DRIVER, CH13	J05		1.820.813.00
			4	2	6	31				LINE AMPLIFIER, CH14	J06		1.820.715.00
			4	2	7	27A				CONTROLLER INTERNAL NRS CH14	J07		1.820.815.00
			4	2	8	31				REPRODUCE AMPLIFIER, CH14	J08		1.820.710.00
			4	2	9	31				RECORD AMPLIFIER, CH14	J09		1.820.811.00
			4	2	10	31				HF-DRIVER, CH14	J10		1.820.813.00
			4	2	11	31				LINE AMPLIFIER, CH15	J11		1.820.715.00
			4	2	12	27A				CONTROLLER INTERNAL NRS CH15	J12		1.820.815.00
			4	2	13	31				REPRODUCE AMPLIFIER, CH15	J13		1.820.710.00
			4	2	14	31				RECORD AMPLIFIER, CH15	J14		1.820.811.00
			4	2	15	31				HF-DRIVER, CH15	J15		1.820.813.00
			4	2	16	31				LINE AMPLIFIER, CH16	J16		1.820.715.00
			4	2	17	27A				CONTROLLER INTERNAL NRS CH16	J17		1.820.815.00
			4	2	18	31				REPRODUCE AMPLIFIER, CH16	J18		1.820.710.00
			4	2	19	31				RECORD AMPLIFIER, CH16	J19		1.820.811.00
			4	2	20	31				HF-DRIVER, CH16	J20		1.820.813.00
			4	2	21	23A				BUS CONVERTER	J21		1.820.717.00
			5	1	1	31				LINE AMPLIFIER, CH17	J01		1.820.715.00
			5	1	2	27A				CONTROLLER INTERNAL NRS CH17	J02		1.820.815.00
			5	1	3	31				REPRODUCE AMPLIFIER, CH17	J03		1.820.710.00
			5	1	4	31				RECORD AMPLIFIER, CH17	J04		1.820.811.00
			5	1	5	31				HF-DRIVER, CH17	J05		1.820.813.00
			5	1	6	31				LINE AMPLIFIER, CH18	J06		1.820.715.00
			5	1	7	27A				CONTROLLER INTERNAL NRS CH18	J07		1.820.815.00
			5	1	8	31				REPRODUCE AMPLIFIER, CH18	J08		1.820.710.00
			5	1	9	31				RECORD AMPLIFIER, CH18	J09		1.820.811.00
			5	1	10	31				HF-DRIVER, CH18	J10		1.820.813.00
			5	1	11	31				LINE AMPLIFIER, CH19	J11		1.820.715.00

WILLI STUDER AG	S I G N A L W I R E L I S T	89/07/20	9:25	P A G E 97
	* TAPE TRANSPORT & AUDIO MCH *	89/04/19 - 00		

SIGNAL NAME	COLOR	MI	ASY	GRP	ELM	PNT	S	LV	TYPE	DESCRIPTION OF ELEMENT		REMARK	ELEMENT NR.
<<-- CONT.OF			5	1	12	27A				CONTROLLER INTERNAL NRS CH19	J12		1.820.815.00
CA-DATA0			5	1	13	31				REPRODUCE AMPLIFIER, CH19	J13		1.820.710.00
			5	1	14	31				RECORD AMPLIFIER, CH19	J14		1.820.811.00
			5	1	15	31				HF-DRIVER, CH19	J15		1.820.813.00
			5	1	16	31				LINE AMPLIFIER, CH20	J16		1.820.715.00
			5	1	17	27A				CONTROLLER INTERNAL NRS CH20	J17		1.820.815.00
			5	1	18	31				REPRODUCE AMPLIFIER, CH20	J18		1.820.710.00
			5	1	19	31				RECORD AMPLIFIER, CH20	J19		1.820.811.00
			5	1	20	31				HF-DRIVER, CH20	J20		1.820.813.00
			5	1	21	23A				BUS CONVERTER	J21		1.820.717.00
			5	2	1	31				LINE AMPLIFIER, CH21	J01		1.820.715.00
			5	2	2	27A				CONTROLLER INTERNAL NRS CH21	J02		1.820.815.00
			5	2	3	31				REPRODUCE AMPLIFIER, CH21	J03		1.820.710.00
			5	2	4	31				RECORD AMPLIFIER, CH21	J04		1.820.811.00
			5	2	5	31				HF-DRIVER, CH21	J05		1.820.813.00
			5	2	6	31				LINE AMPLIFIER, CH22	J06		1.820.715.00
			5	2	7	27A				CONTROLLER INTERNAL NRS CH22	J07		1.820.815.00
			5	2	8	31				REPRODUCE AMPLIFIER, CH22	J08		1.820.710.00
			5	2	9	31				RECORD AMPLIFIER, CH22	J09		1.820.811.00
			5	2	10	31				HF-DRIVER, CH22	J10		1.820.813.00
			5	2	11	31				LINE AMPLIFIER, CH23	J11		1.820.715.00
			5	2	12	27A				CONTROLLER INTERNAL NRS CH23	J12		1.820.815.00
			5	2	13	31				REPRODUCE AMPLIFIER, CH23	J13		1.820.710.00
			5	2	14	31				RECORD AMPLIFIER, CH23	J14		1.820.811.00
			5	2	15	31				HF-DRIVER, CH23	J15		1.820.813.00
			5	2	16	31				LINE AMPLIFIER, CH24	J16		1.820.715.00
			5	2	17	27A				CONTROLLER INTERNAL NRS CH24	J17		1.820.815.00
			5	2	18	31				REPRODUCE AMPLIFIER, CH24	J18		1.820.710.00
			5	2	19	31				RECORD AMPLIFIER, CH24	J19		1.820.811.00
			5	2	20	31				HF-DRIVER, CH24	J20		1.820.813.00
			5	2	21	23A				BUS CONVERTER	J21		1.820.717.00
CA-DATA1			3	1	1	32				LINE AMPLIFIER, CH 1	J01		1.820.715.00
			3	1	2	27B				CONTROLLER INTERNAL NRS CH 1	J02		1.820.815.00
			3	1	3	32				REPRODUCE AMPLIFIER, CH 1	J03		1.820.710.00
			3	1	4	32				RECORD AMPLIFIER, CH 1	J04		1.820.811.00
			3	1	5	32				HF-DRIVER, CH 1	J05		1.820.813.00
			3	1	6	32				LINE AMPLIFIER, CH 2	J06		1.820.715.00
			3	1	7	27B				CONTROLLER INTERNAL NRS CH 2	J07		1.820.815.00
			3	1	8	32				REPRODUCE AMPLIFIER, CH 2	J08		1.820.710.00
			3	1	9	32				RECORD AMPLIFIER, CH 2	J09		1.820.811.00
			3	1	10	32				HF-DRIVER, CH 2	J10		1.820.813.00
			3	1	11	32				LINE AMPLIFIER, CH 3	J11		1.820.715.00
			3	1	12	27B				CONTROLLER INTERNAL NRS CH 3	J12		1.820.815.00
			3	1	13	32				REPRODUCE AMPLIFIER, CH 3	J13		1.820.710.00
			3	1	14	32				RECORD AMPLIFIER, CH 3	J14		1.820.811.00
			3	1	15	32				HF-DRIVER, CH 3	J15		1.820.813.00
			3	1	16	32				LINE AMPLIFIER, CH 4	J16		1.820.715.00
			3	1	17	27B				CONTROLLER INTERNAL NRS CH 4	J17		1.820.815.00
			3	1	18	32				REPRODUCE AMPLIFIER, CH 4	J18		1.820.710.00
			3	1	19	32				RECORD AMPLIFIER, CH 4	J19		1.820.811.00
			3	1	20	32				HF-DRIVER, CH 4	J20		1.820.813.00
			3	1	21	23B				BUS CONVERTER	J21		1.820.717.00
			3	2	1	32				LINE AMPLIFIER, CH 5	J01		1.820.715.00

WILLI STUDER AG	S I G N A L W I R E L I S T	89/07/20	9:25	P A G E 98
	* TAPE TRANSPORT & AUDIO MCH *	89/04/19 - 00		

SIGNAL NAME	COLOR	MI	ASY	GRP	ELM	PNT	S	LV	TYPE	DESCRIPTION OF ELEMENT		REMARK	ELEMENT NR.
<<-- CONT.OF			3	2	2	27B				CONTROLLER INTERNAL NRS CH 5	J02		1.820.815.00
CA-DATA1			3	2	3	32				REPRODUCE AMPLIFIER, CH 5	J03		1.820.710.00
			3	2	4	32				RECORD AMPLIFIER, CH 5	J04		1.820.811.00
			3	2	5	32				HF-DRIVER, CH 5	J05		1.820.813.00
			3	2	6	32				LINE AMPLIFIER, CH 6	J06		1.820.715.00
			3	2	7	27B				CONTROLLER INTERNAL NRS CH 6	J07		1.820.815.00
			3	2	8	32				REPRODUCE AMPLIFIER, CH 6	J08		1.820.710.00
			3	2	9	32				RECORD AMPLIFIER, CH 6	J09		1.820.811.00
			3	2	10	32				HF-DRIVER, CH 6	J10		1.820.813.00
			3	2	11	32				LINE AMPLIFIER, CH 7	J11		1.820.715.00
			3	2	12	27B				CONTROLLER INTERNAL NRS CH 7	J12		1.820.815.00
			3	2	13	32				REPRODUCE AMPLIFIER, CH 7	J13		1.820.710.00
			3	2	14	32				RECORD AMPLIFIER, CH 7	J14		1.820.811.00
			3	2	15	32				HF-DRIVER, CH 7	J15		1.820.813.00
			3	2	16	32				LINE AMPLIFIER, CH 8	J16		1.820.715.00
			3	2	17	27B				CONTROLLER INTERNAL NRS CH 8	J17		1.820.815.00
			3	2	18	32				REPRODUCE AMPLIFIER, CH 8	J18		1.820.710.00
			3	2	19	32				RECORD AMPLIFIER, CH 8	J19		1.820.811.00
			3	2	20	32				HF-DRIVER, CH 8	J20		1.820.813.00
			3	2	21	23B				BUS CONVERTER	J21		1.820.717.00
			4	1	1	32				LINE AMPLIFIER, CH 9	J01		1.820.715.00
			4	1	2	27B				CONTROLLER INTERNAL NRS CH 9	J02		1.820.815.00
			4	1	3	32				REPRODUCE AMPLIFIER, CH 9	J03		1.820.710.00
			4	1	4	32				RECORD AMPLIFIER, CH 9	J04		1.820.811.00
			4	1	5	32				HF-DRIVER, CH 9	J05		1.820.813.00
			4	1	6	32				LINE AMPLIFIER, CH10	J06		1.820.715.00
			4	1	7	27B				CONTROLLER INTERNAL NRS CH10	J07		1.820.815.00
			4	1	8	32				REPRODUCE AMPLIFIER, CH10	J08		1.820.710.00
			4	1	9	32				RECORD AMPLIFIER, CH10	J09		1.820.811.00
			4	1	10	32				HF-DRIVER, CH10	J10		1.820.813.00
			4	1	11	32				LINE AMPLIFIER, CH11	J11		1.820.715.00
			4	1	12	27B				CONTROLLER INTERNAL NRS CH11	J12		1.820.815.00
			4	1	13	32				REPRODUCE AMPLIFIER, CH11	J13		1.820.710.00
			4	1	14	32				RECORD AMPLIFIER, CH11	J14		1.820.811.00
			4	1	15	32				HF-DRIVER, CH11	J15		1.820.813.00
			4	1	16	32				LINE AMPLIFIER, CH12	J16		1.820.715.00
			4	1	17	27B				CONTROLLER INTERNAL NRS CH12	J17		1.820.815.00
			4	1	18	32				REPRODUCE AMPLIFIER, CH12	J18		1.820.710.00
			4	1	19	32				RECORD AMPLIFIER, CH12	J19		1.820.811.00
			4	1	20	32				HF-DRIVER, CH12	J20		1.820.813.00
			4	1	21	23B				BUS CONVERTER	J21		1.820.717.00
			4	2	1	32				LINE AMPLIFIER, CH13	J01		1.820.715.00
			4	2	2	27B				CONTROLLER INTERNAL NRS CH13	J02		1.820.815.00
			4	2	3	32				REPRODUCE AMPLIFIER, CH13	J03		1.820.710.00
			4	2	4	32				RECORD AMPLIFIER, CH13	J04		1.820.811.00
			4	2	5	32				HF-DRIVER, CH13	J05		1.820.813.00
			4	2	6	32				LINE AMPLIFIER, CH14	J06		1.820.715.00
			4	2	7	27B				CONTROLLER INTERNAL NRS CH14	J07		1.820.815.00
			4	2	8	32				REPRODUCE AMPLIFIER, CH14	J08		1.820.710.00
			4	2	9	32				RECORD AMPLIFIER, CH14	J09		1.820.811.00
			4	2	10	32				HF-DRIVER, CH14	J10		1.820.813.00
			4	2	11	32				LINE AMPLIFIER, CH15	J11		1.820.715.00
			4	2	12	27B				CONTROLLER INTERNAL NRS CH15	J12		1.820.815.00
			4	2	13	32				REPRODUCE AMPLIFIER, CH15	J13		1.820.710.00

WILLI STUDER AG * S I G N A L W I R E L I S T * 89/07/20 * 9:25 * P A G E 99 *

* TAPE TRANSPORT & AUDIO MCH * * 89/04/19 - 00 *

SIGNAL NAME	COLOR	MI	ASY	GRP	ELM	PNT	S	LV	TYPE	DESCRIPTION OF ELEMENT		REMARK	ELEMENT NR.
<<-- CONT.OF			4	2	14	32				RECORD AMPLIFIER, CH15	J14		1.820.811.00
CA-DATA1			4	2	15	32				HF-DRIVER, CH15	J15		1.820.813.00
			4	2	16	32				LINE AMPLIFIER, CH16	J16		1.820.715.00
			4	2	17	27B				CONTROLLER INTERNAL NRS CH16	J17		1.820.815.00
			4	2	18	32				REPRODUCE AMPLIFIER, CH16	J18		1.820.710.00
			4	2	19	32				RECORD AMPLIFIER, CH16	J19		1.820.811.00
			4	2	20	32				HF-DRIVER, CH16	J20		1.820.813.00
			4	2	21	23B				BUS CONVERTER	J21		1.820.717.00
			5	1	1	32				LINE AMPLIFIER, CH17	J01		1.820.715.00
			5	1	2	27B				CONTROLLER INTERNAL NRS CH17	J02		1.820.815.00
			5	1	3	32				REPRODUCE AMPLIFIER, CH17	J03		1.820.710.00
			5	1	4	32				RECORD AMPLIFIER, CH17	J04		1.820.811.00
			5	1	5	32				HF-DRIVER, CH17	J05		1.820.813.00
			5	1	6	32				LINE AMPLIFIER, CH18	J06		1.820.715.00
			5	1	7	27B				CONTROLLER INTERNAL NRS CH18	J07		1.820.815.00
			5	1	8	32				REPRODUCE AMPLIFIER, CH18	J08		1.820.710.00
			5	1	9	32				RECORD AMPLIFIER, CH18	J09		1.820.811.00
			5	1	10	32				HF-DRIVER, CH18	J10		1.820.813.00
			5	1	11	32				LINE AMPLIFIER, CH19	J11		1.820.715.00
			5	1	12	27B				CONTROLLER INTERNAL NRS CH19	J12		1.820.815.00
			5	1	13	32				REPRODUCE AMPLIFIER, CH19	J13		1.820.710.00
			5	1	14	32				RECORD AMPLIFIER, CH19	J14		1.820.811.00
			5	1	15	32				HF-DRIVER, CH19	J15		1.820.813.00
			5	1	16	32				LINE AMPLIFIER, CH20	J16		1.820.715.00
			5	1	17	27B				CONTROLLER INTERNAL NRS CH20	J17		1.820.815.00
			5	1	18	32				REPRODUCE AMPLIFIER, CH20	J18		1.820.710.00
			5	1	19	32				RECORD AMPLIFIER, CH20	J19		1.820.811.00
			5	1	20	32				HF-DRIVER, CH20	J20		1.820.813.00
			5	1	21	23B				BUS CONVERTER	J21		1.820.717.00
			5	2	1	32				LINE AMPLIFIER, CH21	J01		1.820.715.00
			5	2	2	27B				CONTROLLER INTERNAL NRS CH21	J02		1.820.815.00
			5	2	3	32				REPRODUCE AMPLIFIER, CH21	J03		1.820.710.00
			5	2	4	32				RECORD AMPLIFIER, CH21	J04		1.820.811.00
			5	2	5	32				HF-DRIVER, CH21	J05		1.820.813.00
			5	2	6	32				LINE AMPLIFIER, CH22	J06		1.820.715.00
			5	2	7	27B				CONTROLLER INTERNAL NRS CH22	J07		1.820.815.00
			5	2	8	32				REPRODUCE AMPLIFIER, CH22	J08		1.820.710.00
			5	2	9	32				RECORD AMPLIFIER, CH22	J09		1.820.811.00
			5	2	10	32				HF-DRIVER, CH22	J10		1.820.813.00
			5	2	11	32				LINE AMPLIFIER, CH23	J11		1.820.715.00
			5	2	12	27B				CONTROLLER INTERNAL NRS CH23	J12		1.820.815.00
			5	2	13	32				REPRODUCE AMPLIFIER, CH23	J13		1.820.710.00
			5	2	14	32				RECORD AMPLIFIER, CH23	J14		1.820.811.00
			5	2	15	32				HF-DRIVER, CH23	J15		1.820.813.00
			5	2	16	32				LINE AMPLIFIER, CH24	J16		1.820.715.00
			5	2	17	27B				CONTROLLER INTERNAL NRS CH24	J17		1.820.815.00
			5	2	18	32				REPRODUCE AMPLIFIER, CH24	J18		1.820.710.00
			5	2	19	32				RECORD AMPLIFIER, CH24	J19		1.820.811.00
			5	2	20	32				HF-DRIVER, CH24	J20		1.820.813.00
			5	2	21	23B				BUS CONVERTER	J21		1.820.717.00
CA-DATA2			3	1	1	33				LINE AMPLIFIER, CH 1	J01		1.820.715.00
			3	1	2	28A				CONTROLLER INTERNAL NRS CH 1	J02		1.820.815.00
			3	1	3	33				REPRODUCE AMPLIFIER, CH 1	J03		1.820.710.00

WILLI STUDER AG * S I G N A L W I R E L I S T * 89/07/20 * 9:25 * P A G E 100 *

* TAPE TRANSPORT & AUDIO MCH * * 89/04/19 - 00 *

SIGNAL NAME	COLOR	MI	ASY	GRP	ELM	PNT	S	LV	TYPE	DESCRIPTION OF ELEMENT		REMARK	ELEMENT NR.
<<-- CONT.OF			3	1	4	33				RECORD AMPLIFIER, CH 1	J04		1.820.811.00
CA-DATA2			3	1	5	33				HF-DRIVER, CH 1	J05		1.820.813.00
			3	1	6	33				LINE AMPLIFIER, CH 2	J06		1.820.715.00
			3	1	7	28A				CONTROLLER INTERNAL NRS CH 2	J07		1.820.815.00
			3	1	8	33				REPRODUCE AMPLIFIER, CH 2	J08		1.820.710.00
			3	1	9	33				RECORD AMPLIFIER, CH 2	J09		1.820.811.00
			3	1	10	33				HF-DRIVER, CH 2	J10		1.820.813.00
			3	1	11	33				LINE AMPLIFIER, CH 3	J11		1.820.715.00
			3	1	12	28A				CONTROLLER INTERNAL NRS CH 3	J12		1.820.815.00
			3	1	13	33				REPRODUCE AMPLIFIER, CH 3	J13		1.820.710.00
			3	1	14	33				RECORD AMPLIFIER, CH 3	J14		1.820.811.00
			3	1	15	33				HF-DRIVER, CH 3	J15		1.820.813.00
			3	1	16	33				LINE AMPLIFIER, CH 4	J16		1.820.715.00
			3	1	17	28A				CONTROLLER INTERNAL NRS CH 4	J17		1.820.815.00
			3	1	18	33				REPRODUCE AMPLIFIER, CH 4	J18		1.820.710.00
			3	1	19	33				RECORD AMPLIFIER, CH 4	J19		1.820.811.00
			3	1	20	33				HF-DRIVER, CH 4	J20		1.820.813.00
			3	1	21	24A				BUS CONVERTER	J21		1.820.717.00
			3	2	1	33				LINE AMPLIFIER, CH 5	J01		1.820.715.00
			3	2	2	28A				CONTROLLER INTERNAL NRS CH 5	J02		1.820.815.00
			3	2	3	33				REPRODUCE AMPLIFIER, CH 5	J03		1.820.710.00
			3	2	4	33				RECORD AMPLIFIER, CH 5	J04		1.820.811.00
			3	2	5	33				HF-DRIVER, CH 5	J05		1.820.813.00
			3	2	6	33				LINE AMPLIFIER, CH 6	J06		1.820.715.00
			3	2	7	28A				CONTROLLER INTERNAL NRS CH 6	J07		1.820.815.00
			3	2	8	33				REPRODUCE AMPLIFIER, CH 6	J08		1.820.710.00
			3	2	9	33				RECORD AMPLIFIER, CH 6	J09		1.820.811.00
			3	2	10	33				HF-DRIVER, CH 6	J10		1.820.813.00
			3	2	11	33				LINE AMPLIFIER, CH 7	J11		1.820.715.00
			3	2	12	28A				CONTROLLER INTERNAL NRS CH 7	J12		1.820.815.00
			3	2	13	33				REPRODUCE AMPLIFIER, CH 7	J13		1.820.710.00
			3	2	14	33				RECORD AMPLIFIER, CH 7	J14		1.820.811.00
			3	2	15	33				HF-DRIVER, CH 7	J15		1.820.813.00
			3	2	16	33				LINE AMPLIFIER, CH 8	J16		1.820.715.00
			3	2	17	28A				CONTROLLER INTERNAL NRS CH 8	J17		1.820.815.00
			3	2	18	33				REPRODUCE AMPLIFIER, CH 8	J18		1.820.710.00
			3	2	19	33				RECORD AMPLIFIER, CH 8	J19		1.820.811.00
			3	2	20	33				HF-DRIVER, CH 8	J20		1.820.813.00
			3	2	21	24A				BUS CONVERTER	J21		1.820.717.00
			4	1	1	33				LINE AMPLIFIER, CH 9	J01		1.820.715.00
			4	1	2	28A				CONTROLLER INTERNAL NRS CH 9	J02		1.820.815.00
			4	1	3	33				REPRODUCE AMPLIFIER, CH 9	J03		1.820.710.00
			4	1	4	33				RECORD AMPLIFIER, CH 9	J04		1.820.811.00
			4	1	5	33				HF-DRIVER, CH 9	J05		1.820.813.00
			4	1	6	33				LINE AMPLIFIER, CH10	J06		1.820.715.00
			4	1	7	28A				CONTROLLER INTERNAL NRS CH10	J07		1.820.815.00
			4	1	8	33				REPRODUCE AMPLIFIER, CH10	J08		1.820.710.00
			4	1	9	33				RECORD AMPLIFIER, CH10	J09		1.820.811.00
			4	1	10	33				HF-DRIVER, CH10	J10		1.820.813.00
			4	1	11	33				LINE AMPLIFIER, CH11	J11		1.820.715.00
			4	1	12	28A				CONTROLLER INTERNAL NRS CH11	J12		1.820.815.00
			4	1	13	33				REPRODUCE AMPLIFIER, CH11	J13		1.820.710.00
			4	1	14	33				RECORD AMPLIFIER, CH11	J14		1.820.811.00
			4	1	15	33				HF-DRIVER, CH11	J15		1.820.813.00

```
*    WILLI STUDER AG    *    S I G N A L    W I R E    L I S T              * 89/07/20  *   9:25  *   P A G E 101   *
*                        * TAPE TRANSPORT & AUDIO MCH *                      * 89/04/19 - 00                          *
```

SIGNAL NAME	COLOR	MI	ASY	GRP	ELM	PNT	S	LV	TYPE	DESCRIPTION OF ELEMENT		REMARK	ELEMENT NR.
<<-- CONT.OF			4	1	16	33				LINE AMPLIFIER, CH12	J16		1.820.715.00
CA-DATA2			4	1	17	28A				CONTROLLER INTERNAL NRS CH12	J17		1.820.815.00
			4	1	18	33				REPRODUCE AMPLIFIER, CH12	J18		1.820.710.00
			4	1	19	33				RECORD AMPLIFIER, CH12	J19		1.820.811.00
			4	1	20	33				HF-DRIVER, CH12	J20		1.820.813.00
			4	1	21	24A				BUS CONVERTER	J21		1.820.717.00
			4	2	1	33				LINE AMPLIFIER, CH13	J01		1.820.715.00
			4	2	2	28A				CONTROLLER INTERNAL NRS CH13	J02		1.820.815.00
			4	2	3	33				REPRODUCE AMPLIFIER, CH13	J03		1.820.710.00
			4	2	4	33				RECORD AMPLIFIER, CH13	J04		1.820.811.00
			4	2	5	33				HF-DRIVER, CH13	J05		1.820.813.00
			4	2	6	33				LINE AMPLIFIER, CH14	J06		1.820.715.00
			4	2	7	28A				CONTROLLER INTERNAL NRS CH14	J07		1.820.815.00
			4	2	8	33				REPRODUCE AMPLIFIER, CH14	J08		1.820.710.00
			4	2	9	33				RECORD AMPLIFIER, CH14	J09		1.820.811.00
			4	2	10	33				HF-DRIVER, CH14	J10		1.820.813.00
			4	2	11	33				LINE AMPLIFIER, CH15	J11		1.820.715.00
			4	2	12	28A				CONTROLLER INTERNAL NRS CH15	J12		1.820.815.00
			4	2	13	33				REPRODUCE AMPLIFIER, CH15	J13		1.820.710.00
			4	2	14	33				RECORD AMPLIFIER, CH15	J14		1.820.811.00
			4	2	15	33				HF-DRIVER, CH15	J15		1.820.813.00
			4	2	16	33				LINE AMPLIFIER, CH16	J16		1.820.715.00
			4	2	17	28A				CONTROLLER INTERNAL NRS CH16	J17		1.820.815.00
			4	2	18	33				REPRODUCE AMPLIFIER, CH16	J18		1.820.710.00
			4	2	19	33				RECORD AMPLIFIER, CH16	J19		1.820.811.00
			4	2	20	33				HF-DRIVER, CH16	J20		1.820.813.00
			4	2	21	24A				BUS CONVERTER	J21		1.820.717.00
			5	1	1	33				LINE AMPLIFIER, CH17	J01		1.820.715.00
			5	1	2	28A				CONTROLLER INTERNAL NRS CH17	J02		1.820.815.00
			5	1	3	33				REPRODUCE AMPLIFIER, CH17	J03		1.820.710.00
			5	1	4	33				RECORD AMPLIFIER, CH17	J04		1.820.811.00
			5	1	5	33				HF-DRIVER, CH17	J05		1.820.813.00
			5	1	6	33				LINE AMPLIFIER, CH18	J06		1.820.715.00
			5	1	7	28A				CONTROLLER INTERNAL NRS CH18	J07		1.820.815.00
			5	1	8	33				REPRODUCE AMPLIFIER, CH18	J08		1.820.710.00
			5	1	9	33				RECORD AMPLIFIER, CH18	J09		1.820.811.00
			5	1	10	33				HF-DRIVER, CH18	J10		1.820.813.00
			5	1	11	33				LINE AMPLIFIER, CH19	J11		1.820.715.00
			5	1	12	28A				CONTROLLER INTERNAL NRS CH19	J12		1.820.815.00
			5	1	13	33				REPRODUCE AMPLIFIER, CH19	J13		1.820.710.00
			5	1	14	33				RECORD AMPLIFIER, CH19	J14		1.820.811.00
			5	1	15	33				HF-DRIVER, CH19	J15		1.820.813.00
			5	1	16	33				LINE AMPLIFIER, CH20	J16		1.820.715.00
			5	1	17	28A				CONTROLLER INTERNAL NRS CH20	J17		1.820.815.00
			5	1	18	33				REPRODUCE AMPLIFIER, CH20	J18		1.820.710.00
			5	1	19	33				RECORD AMPLIFIER, CH20	J19		1.820.811.00
			5	1	20	33				HF-DRIVER, CH20	J20		1.820.813.00
			5	1	21	24A				BUS CONVERTER	J21		1.820.717.00
			5	2	1	33				LINE AMPLIFIER, CH21	J01		1.820.715.00
			5	2	2	28A				CONTROLLER INTERNAL NRS CH21	J02		1.820.815.00
			5	2	3	33				REPRODUCE AMPLIFIER, CH21	J03		1.820.710.00
			5	2	4	33				RECORD AMPLIFIER, CH21	J04		1.820.811.00
			5	2	5	33				HF-DRIVER, CH21	J05		1.820.813.00
			5	2	6	33				LINE AMPLIFIER, CH22	J06		1.820.715.00

```
*    WILLI STUDER AG    *    S I G N A L    W I R E    L I S T              * 89/07/20  *   9:25  *   P A G E 102   *
*                        * TAPE TRANSPORT & AUDIO MCH *                      * 89/04/19 - 00                          *
```

SIGNAL NAME	COLOR	MI	ASY	GRP	ELM	PNT	S	LV	TYPE	DESCRIPTION OF ELEMENT		REMARK	ELEMENT NR.
<<-- CONT.OF			5	2	7	28A				CONTROLLER INTERNAL NRS CH22	J07		1.820.815.00
CA-DATA2			5	2	8	33				REPRODUCE AMPLIFIER, CH22	J08		1.820.710.00
			5	2	9	33				RECORD AMPLIFIER, CH22	J09		1.820.811.00
			5	2	10	33				HF-DRIVER, CH22	J10		1.820.813.00
			5	2	11	33				LINE AMPLIFIER, CH23	J11		1.820.715.00
			5	2	12	28A				CONTROLLER INTERNAL NRS CH23	J12		1.820.815.00
			5	2	13	33				REPRODUCE AMPLIFIER, CH23	J13		1.820.710.00
			5	2	14	33				RECORD AMPLIFIER, CH23	J14		1.820.811.00
			5	2	15	33				HF-DRIVER, CH23	J15		1.820.813.00
			5	2	16	33				LINE AMPLIFIER, CH24	J16		1.820.715.00
			5	2	17	28A				CONTROLLER INTERNAL NRS CH24	J17		1.820.815.00
			5	2	18	33				REPRODUCE AMPLIFIER, CH24	J18		1.820.710.00
			5	2	19	33				RECORD AMPLIFIER, CH24	J19		1.820.811.00
			5	2	20	33				HF-DRIVER, CH24	J20		1.820.813.00
			5	2	21	24A				BUS CONVERTER	J21		1.820.717.00
CA-DATA3			3	1	1	34				LINE AMPLIFIER, CH 1	J01		1.820.715.00
			3	1	2	28B				CONTROLLER INTERNAL NRS CH 1	J02		1.820.815.00
			3	1	3	34				REPRODUCE AMPLIFIER, CH 1	J03		1.820.710.00
			3	1	4	34				RECORD AMPLIFIER, CH 1	J04		1.820.811.00
			3	1	5	34				HF-DRIVER, CH 1	J05		1.820.813.00
			3	1	6	34				LINE AMPLIFIER, CH 2	J06		1.820.715.00
			3	1	7	28B				CONTROLLER INTERNAL NRS CH 2	J07		1.820.815.00
			3	1	8	34				REPRODUCE AMPLIFIER, CH 2	J08		1.820.710.00
			3	1	9	34				RECORD AMPLIFIER, CH 2	J09		1.820.811.00
			3	1	10	34				HF-DRIVER, CH 2	J10		1.820.813.00
			3	1	11	34				LINE AMPLIFIER, CH 3	J11		1.820.715.00
			3	1	12	28B				CONTROLLER INTERNAL NRS CH 3	J12		1.820.815.00
			3	1	13	34				REPRODUCE AMPLIFIER, CH 3	J13		1.820.710.00
			3	1	14	34				RECORD AMPLIFIER, CH 3	J14		1.820.811.00
			3	1	15	34				HF-DRIVER, CH 3	J15		1.820.813.00
			3	1	16	34				LINE AMPLIFIER, CH 4	J16		1.820.715.00
			3	1	17	28B				CONTROLLER INTERNAL NRS CH 4	J17		1.820.815.00
			3	1	18	34				REPRODUCE AMPLIFIER, CH 4	J18		1.820.710.00
			3	1	19	34				RECORD AMPLIFIER, CH 4	J19		1.820.811.00
			3	1	20	34				HF-DRIVER, CH 4	J20		1.820.813.00
			3	1	21	24B				BUS CONVERTER	J21		1.820.717.00
			3	2	1	34				LINE AMPLIFIER, CH 5	J01		1.820.715.00
			3	2	2	28B				CONTROLLER INTERNAL NRS CH 5	J02		1.820.815.00
			3	2	3	34				REPRODUCE AMPLIFIER, CH 5	J03		1.820.710.00
			3	2	4	34				RECORD AMPLIFIER, CH 5	J04		1.820.811.00
			3	2	5	34				HF-DRIVER, CH 5	J05		1.820.813.00
			3	2	6	34				LINE AMPLIFIER, CH 6	J06		1.820.715.00
			3	2	7	28B				CONTROLLER INTERNAL NRS CH 6	J07		1.820.815.00
			3	2	8	34				REPRODUCE AMPLIFIER, CH 6	J08		1.820.710.00
			3	2	9	34				RECORD AMPLIFIER, CH 6	J09		1.820.811.00
			3	2	10	34				HF-DRIVER, CH 6	J10		1.820.813.00
			3	2	11	34				LINE AMPLIFIER, CH 7	J11		1.820.715.00
			3	2	12	28B				CONTROLLER INTERNAL NRS CH 7	J12		1.820.815.00
			3	2	13	34				REPRODUCE AMPLIFIER, CH 7	J13		1.820.710.00
			3	2	14	34				RECORD AMPLIFIER, CH 7	J14		1.820.811.00
			3	2	15	34				HF-DRIVER, CH 7	J15		1.820.813.00
			3	2	16	34				LINE AMPLIFIER, CH 8	J16		1.820.715.00
			3	2	17	28B				CONTROLLER INTERNAL NRS CH 8	J17		1.820.815.00

WILLI STUDER AG * S I G N A L W I R E L I S T * 89/07/20 * 9:25 * P A G E 103

* TAPE TRANSPORT & AUDIO MCH * * 89/04/19 - 00

SIGNAL NAME	COLOR	MI	ASY	GRP	ELM	PNT	S	LV	TYPE	DESCRIPTION OF ELEMENT		REMARK	ELEMENT NR.
<<-- CONT.OF			3	2	18	34				REPRODUCE AMPLIFIER, CH 8	J18		1.820.710.00
CA-DATA3			3	2	19	34				RECORD AMPLIFIER, CH 8	J19		1.820.811.00
			3	2	20	34				HF-DRIVER, CH 8	J20		1.820.813.00
			3	2	21	24B				BUS CONVERTER	J21		1.820.717.00
			4	1	1	34				LINE AMPLIFIER, CH 9	J01		1.820.715.00
			4	1	2	28B				CONTROLLER INTERNAL NRS CH 9	J02		1.820.815.00
			4	1	3	34				REPRODUCE AMPLIFIER, CH 9	J03		1.820.710.00
			4	1	4	34				RECORD AMPLIFIER, CH 9	J04		1.820.811.00
			4	1	5	34				HF-DRIVER, CH 9	J05		1.820.813.00
			4	1	6	34				LINE AMPLIFIER, CH10	J06		1.820.715.00
			4	1	7	28B				CONTROLLER INTERNAL NRS CH10	J07		1.820.815.00
			4	1	8	34				REPRODUCE AMPLIFIER, CH10	J08		1.820.710.00
			4	1	9	34				RECORD AMPLIFIER, CH10	J09		1.820.811.00
			4	1	10	34				HF-DRIVER, CH10	J10		1.820.813.00
			4	1	11	34				LINE AMPLIFIER, CH11	J11		1.820.715.00
			4	1	12	28B				CONTROLLER INTERNAL NRS CH11	J12		1.820.815.00
			4	1	13	34				REPRODUCE AMPLIFIER, CH11	J13		1.820.710.00
			4	1	14	34				RECORD AMPLIFIER, CH11	J14		1.820.811.00
			4	1	15	34				HF-DRIVER, CH11	J15		1.820.813.00
			4	1	16	34				LINE AMPLIFIER, CH12	J16		1.820.715.00
			4	1	17	28B				CONTROLLER INTERNAL NRS CH12	J17		1.820.815.00
			4	1	18	34				REPRODUCE AMPLIFIER, CH12	J18		1.820.710.00
			4	1	19	34				RECORD AMPLIFIER, CH12	J19		1.820.811.00
			4	1	20	34				HF-DRIVER, CH12	J20		1.820.813.00
			4	1	21	24B				BUS CONVERTER	J21		1.820.717.00
			4	2	1	34				LINE AMPLIFIER, CH13	J01		1.820.715.00
			4	2	2	28B				CONTROLLER INTERNAL NRS CH13	J02		1.820.815.00
			4	2	3	34				REPRODUCE AMPLIFIER, CH13	J03		1.820.710.00
			4	2	4	34				RECORD AMPLIFIER, CH13	J04		1.820.811.00
			4	2	5	34				HF-DRIVER, CH13	J05		1.820.813.00
			4	2	6	34				LINE AMPLIFIER, CH14	J06		1.820.715.00
			4	2	7	28B				CONTROLLER INTERNAL NRS CH14	J07		1.820.815.00
			4	2	8	34				REPRODUCE AMPLIFIER, CH14	J08		1.820.710.00
			4	2	9	34				RECORD AMPLIFIER, CH14	J09		1.820.811.00
			4	2	10	34				HF-DRIVER, CH14	J10		1.820.813.00
			4	2	11	34				LINE AMPLIFIER, CH15	J11		1.820.715.00
			4	2	12	28B				CONTROLLER INTERNAL NRS CH15	J12		1.820.815.00
			4	2	13	34				REPRODUCE AMPLIFIER, CH15	J13		1.820.710.00
			4	2	14	34				RECORD AMPLIFIER, CH15	J14		1.820.811.00
			4	2	15	34				HF-DRIVER, CH15	J15		1.820.813.00
			4	2	16	34				LINE AMPLIFIER, CH16	J16		1.820.715.00
			4	2	17	28B				CONTROLLER INTERNAL NRS CH16	J17		1.820.815.00
			4	2	18	34				REPRODUCE AMPLIFIER, CH16	J18		1.820.710.00
			4	2	19	34				RECORD AMPLIFIER, CH16	J19		1.820.811.00
			4	2	20	34				HF-DRIVER, CH16	J20		1.820.813.00
			4	2	21	24B				BUS CONVERTER	J21		1.820.717.00
			5	1	1	34				LINE AMPLIFIER, CH17	J01		1.820.715.00
			5	1	2	28B				CONTROLLER INTERNAL NRS CH17	J02		1.820.815.00
			5	1	3	34				REPRODUCE AMPLIFIER, CH17	J03		1.820.710.00
			5	1	4	34				RECORD AMPLIFIER, CH17	J04		1.820.811.00
			5	1	5	34				HF-DRIVER, CH17	J05		1.820.813.00
			5	1	6	34				LINE AMPLIFIER, CH18	J06		1.820.715.00
			5	1	7	28B				CONTROLLER INTERNAL NRS CH18	J07		1.820.815.00
			5	1	8	34				REPRODUCE AMPLIFIER, CH18	J08		1.820.710.00

WILLI STUDER AG * S I G N A L W I R E L I S T * 89/07/20 * 9:25 * P A G E 104

* TAPE TRANSPORT & AUDIO MCH * * 89/04/19 - 00

SIGNAL NAME	COLOR	MI	ASY	GRP	ELM	PNT	S	LV	TYPE	DESCRIPTION OF ELEMENT		REMARK	ELEMENT NR.
<<-- CONT.OF			5	1	9	34				RECORD AMPLIFIER, CH18	J09		1.820.811.00
CA-DATA3			5	1	10	34				HF-DRIVER, CH18	J10		1.820.813.00
			5	1	11	34				LINE AMPLIFIER, CH19	J11		1.820.715.00
			5	1	12	28B				CONTROLLER INTERNAL NRS CH19	J12		1.820.815.00
			5	1	13	34				REPRODUCE AMPLIFIER, CH19	J13		1.820.710.00
			5	1	14	34				RECORD AMPLIFIER, CH19	J14		1.820.811.00
			5	1	15	34				HF-DRIVER, CH19	J15		1.820.813.00
			5	1	16	34				LINE AMPLIFIER, CH20	J16		1.820.715.00
			5	1	17	28B				CONTROLLER INTERNAL NRS CH20	J17		1.820.815.00
			5	1	18	34				REPRODUCE AMPLIFIER, CH20	J18		1.820.710.00
			5	1	19	34				RECORD AMPLIFIER, CH20	J19		1.820.811.00
			5	1	20	34				HF-DRIVER, CH20	J20		1.820.813.00
			5	1	21	24B				BUS CONVERTER	J21		1.820.717.00
			5	2	1	34				LINE AMPLIFIER, CH21	J01		1.820.715.00
			5	2	2	28B				CONTROLLER INTERNAL NRS CH21	J02		1.820.815.00
			5	2	3	34				REPRODUCE AMPLIFIER, CH21	J03		1.820.710.00
			5	2	4	34				RECORD AMPLIFIER, CH21	J04		1.820.811.00
			5	2	5	34				HF-DRIVER, CH21	J05		1.820.813.00
			5	2	6	34				LINE AMPLIFIER, CH22	J06		1.820.715.00
			5	2	7	28B				CONTROLLER INTERNAL NRS CH22	J07		1.820.815.00
			5	2	8	34				REPRODUCE AMPLIFIER, CH22	J08		1.820.710.00
			5	2	9	34				RECORD AMPLIFIER, CH22	J09		1.820.811.00
			5	2	10	34				HF-DRIVER, CH22	J10		1.820.813.00
			5	2	11	34				LINE AMPLIFIER, CH23	J11		1.820.715.00
			5	2	12	28B				CONTROLLER INTERNAL NRS CH23	J12		1.820.815.00
			5	2	13	34				REPRODUCE AMPLIFIER, CH23	J13		1.820.710.00
			5	2	14	34				RECORD AMPLIFIER, CH23	J14		1.820.811.00
			5	2	15	34				HF-DRIVER, CH23	J15		1.820.813.00
			5	2	16	34				LINE AMPLIFIER, CH24	J16		1.820.715.00
			5	2	17	28B				CONTROLLER INTERNAL NRS CH24	J17		1.820.815.00
			5	2	18	34				REPRODUCE AMPLIFIER, CH24	J18		1.820.710.00
			5	2	19	34				RECORD AMPLIFIER, CH24	J19		1.820.811.00
			5	2	20	34				HF-DRIVER, CH24	J20		1.820.813.00
			5	2	21	24B				BUS CONVERTER	J21		1.820.717.00
CA-DATA4			3	1	1	35				LINE AMPLIFIER, CH 1	J01		1.820.715.00
			3	1	2	29A				CONTROLLER INTERNAL NRS CH 1	J02		1.820.815.00
			3	1	3	35				REPRODUCE AMPLIFIER, CH 1	J03		1.820.710.00
			3	1	4	35				RECORD AMPLIFIER, CH 1	J04		1.820.811.00
			3	1	5	35				HF-DRIVER, CH 1	J05		1.820.813.00
			3	1	6	35				LINE AMPLIFIER, CH 2	J06		1.820.715.00
			3	1	7	29A				CONTROLLER INTERNAL NRS CH 2	J07		1.820.815.00
			3	1	8	35				REPRODUCE AMPLIFIER, CH 2	J08		1.820.710.00
			3	1	9	35				RECORD AMPLIFIER, CH 2	J09		1.820.811.00
			3	1	10	35				HF-DRIVER, CH 2	J10		1.820.813.00
			3	1	11	35				LINE AMPLIFIER, CH 3	J11		1.820.715.00
			3	1	12	29A				CONTROLLER INTERNAL NRS CH 3	J12		1.820.815.00
			3	1	13	35				REPRODUCE AMPLIFIER, CH 3	J13		1.820.710.00
			3	1	14	35				RECORD AMPLIFIER, CH 3	J14		1.820.811.00
			3	1	15	35				HF-DRIVER, CH 3	J15		1.820.813.00
			3	1	16	35				LINE AMPLIFIER, CH 4	J16		1.820.715.00
			3	1	17	29A				CONTROLLER INTERNAL NRS CH 4	J17		1.820.815.00
			3	1	18	35				REPRODUCE AMPLIFIER, CH 4	J18		1.820.710.00
			3	1	19	35				RECORD AMPLIFIER, CH 4	J19		1.820.811.00

```
*    WILLI STUDER AG    *    S I G N A L    W I R E    L I S T              * 89/07/20 *   9:25 *   P A G E 105   *
*                          * TAPE TRANSPORT & AUDIO MCH *                    * 89/04/19 - 00                        *
```

SIGNAL NAME	COLOR	MI	ASY	GRP	ELM	PNT	S	LV	TYPE	DESCRIPTION OF ELEMENT		REMARK	ELEMENT NR.
<<-- CONT.OF			3	1	20	35				HF-DRIVER, CH 4	J20		1.820.813.00
CA-DATA4			3	1	21	25A				BUS CONVERTER	J21		1.820.717.00
			3	2	1	35				LINE AMPLIFIER, CH 5	J01		1.820.715.00
			3	2	2	29A				CONTROLLER INTERNAL NRS CH 5	J02		1.820.815.00
			3	2	3	35				REPRODUCE AMPLIFIER, CH 5	J03		1.820.710.00
			3	2	4	35				RECORD AMPLIFIER, CH 5	J04		1.820.811.00
			3	2	5	35				HF-DRIVER, CH 5	J05		1.820.813.00
			3	2	6	35				LINE AMPLIFIER, CH 6	J06		1.820.715.00
			3	2	7	29A				CONTROLLER INTERNAL NRS CH 6	J07		1.820.815.00
			3	2	8	35				REPRODUCE AMPLIFIER, CH 6	J08		1.820.710.00
			3	2	9	35				RECORD AMPLIFIER, CH 6	J09		1.820.811.00
			3	2	10	35				HF-DRIVER, CH 6	J10		1.820.813.00
			3	2	11	35				LINE AMPLIFIER, CH 7	J11		1.820.715.00
			3	2	12	29A				CONTROLLER INTERNAL NRS CH 7	J12		1.820.815.00
			3	2	13	35				REPRODUCE AMPLIFIER, CH 7	J13		1.820.710.00
			3	2	14	35				RECORD AMPLIFIER, CH 7	J14		1.820.811.00
			3	2	15	35				HF-DRIVER, CH 7	J15		1.820.813.00
			3	2	16	35				LINE AMPLIFIER, CH 8	J16		1.820.715.00
			3	2	17	29A				CONTROLLER INTERNAL NRS CH 8	J17		1.820.815.00
			3	2	18	35				REPRODUCE AMPLIFIER, CH 8	J18		1.820.710.00
			3	2	19	35				RECORD AMPLIFIER, CH 8	J19		1.820.811.00
			3	2	20	35				HF-DRIVER, CH 8	J20		1.820.813.00
			3	2	21	25A				BUS CONVERTER	J21		1.820.717.00
			4	1	1	35				LINE AMPLIFIER, CH 9	J01		1.820.715.00
			4	1	2	29A				CONTROLLER INTERNAL NRS CH 9	J02		1.820.815.00
			4	1	3	35				REPRODUCE AMPLIFIER, CH 9	J03		1.820.710.00
			4	1	4	35				RECORD AMPLIFIER, CH 9	J04		1.820.811.00
			4	1	5	35				HF-DRIVER, CH 9	J05		1.820.813.00
			4	1	6	35				LINE AMPLIFIER, CH10	J06		1.820.715.00
			4	1	7	29A				CONTROLLER INTERNAL NRS CH10	J07		1.820.815.00
			4	1	8	35				REPRODUCE AMPLIFIER, CH10	J08		1.820.710.00
			4	1	9	35				RECORD AMPLIFIER, CH10	J09		1.820.811.00
			4	1	10	35				HF-DRIVER, CH10	J10		1.820.813.00
			4	1	11	35				LINE AMPLIFIER, CH11	J11		1.820.715.00
			4	1	12	29A				CONTROLLER INTERNAL NRS CH11	J12		1.820.815.00
			4	1	13	35				REPRODUCE AMPLIFIER, CH11	J13		1.820.710.00
			4	1	14	35				RECORD AMPLIFIER, CH11	J14		1.820.811.00
			4	1	15	35				HF-DRIVER, CH11	J15		1.820.813.00
			4	1	16	35				LINE AMPLIFIER, CH12	J16		1.820.715.00
			4	1	17	29A				CONTROLLER INTERNAL NRS CH12	J17		1.820.815.00
			4	1	18	35				REPRODUCE AMPLIFIER, CH12	J18		1.820.710.00
			4	1	19	35				RECORD AMPLIFIER, CH12	J19		1.820.811.00
			4	1	20	35				HF-DRIVER, CH12	J20		1.820.813.00
			4	1	21	25A				BUS CONVERTER	J21		1.820.717.00
			4	2	1	35				LINE AMPLIFIER, CH13	J01		1.820.715.00
			4	2	2	29A				CONTROLLER INTERNAL NRS CH13	J02		1.820.815.00
			4	2	3	35				REPRODUCE AMPLIFIER, CH13	J03		1.820.710.00
			4	2	4	35				RECORD AMPLIFIER, CH13	J04		1.820.811.00
			4	2	5	35				HF-DRIVER, CH13	J05		1.820.813.00
			4	2	6	35				LINE AMPLIFIER, CH14	J06		1.820.715.00
			4	2	7	29A				CONTROLLER INTERNAL NRS CH14	J07		1.820.815.00
			4	2	8	35				REPRODUCE AMPLIFIER, CH14	J08		1.820.710.00
			4	2	9	35				RECORD AMPLIFIER, CH14	J09		1.820.811.00
			4	2	10	35				HF-DRIVER, CH14	J10		1.820.813.00

```
*    WILLI STUDER AG    *    S I G N A L    W I R E    L I S T              * 89/07/20 *   9:25 *   P A G E 106   *
*                          * TAPE TRANSPORT & AUDIO MCH *                    * 89/04/19 - 00                        *
```

SIGNAL NAME	COLOR	MI	ASY	GRP	ELM	PNT	S	LV	TYPE	DESCRIPTION OF ELEMENT		REMARK	ELEMENT NR.
<<-- CONT.OF			4	2	11	35				LINE AMPLIFIER, CH15	J11		1.820.715.00
CA-DATA4			4	2	12	29A				CONTROLLER INTERNAL NRS CH15	J12		1.820.815.00
			4	2	13	35				REPRODUCE AMPLIFIER, CH15	J13		1.820.710.00
			4	2	14	35				RECORD AMPLIFIER, CH15	J14		1.820.811.00
			4	2	15	35				HF-DRIVER, CH15	J15		1.820.813.00
			4	2	16	35				LINE AMPLIFIER, CH16	J16		1.820.715.00
			4	2	17	29A				CONTROLLER INTERNAL NRS CH16	J17		1.820.815.00
			4	2	18	35				REPRODUCE AMPLIFIER, CH16	J18		1.820.710.00
			4	2	19	35				RECORD AMPLIFIER, CH16	J19		1.820.811.00
			4	2	20	35				HF-DRIVER, CH16	J20		1.820.813.00
			4	2	21	25A				BUS CONVERTER	J21		1.820.717.00
			5	1	1	35				LINE AMPLIFIER, CH17	J01		1.820.715.00
			5	1	2	29A				CONTROLLER INTERNAL NRS CH17	J02		1.820.815.00
			5	1	3	35				REPRODUCE AMPLIFIER, CH17	J03		1.820.710.00
			5	1	4	35				RECORD AMPLIFIER, CH17	J04		1.820.811.00
			5	1	5	35				HF-DRIVER, CH17	J05		1.820.813.00
			5	1	6	35				LINE AMPLIFIER, CH18	J06		1.820.715.00
			5	1	7	29A				CONTROLLER INTERNAL NRS CH18	J07		1.820.815.00
			5	1	8	35				REPRODUCE AMPLIFIER, CH18	J08		1.820.710.00
			5	1	9	35				RECORD AMPLIFIER, CH18	J09		1.820.811.00
			5	1	10	35				HF-DRIVER, CH18	J10		1.820.813.00
			5	1	11	35				LINE AMPLIFIER, CH19	J11		1.820.715.00
			5	1	12	29A				CONTROLLER INTERNAL NRS CH19	J12		1.820.815.00
			5	1	13	35				REPRODUCE AMPLIFIER, CH19	J13		1.820.710.00
			5	1	14	35				RECORD AMPLIFIER, CH19	J14		1.820.811.00
			5	1	15	35				HF-DRIVER, CH19	J15		1.820.813.00
			5	1	16	35				LINE AMPLIFIER, CH20	J16		1.820.715.00
			5	1	17	29A				CONTROLLER INTERNAL NRS CH20	J17		1.820.815.00
			5	1	18	35				REPRODUCE AMPLIFIER, CH20	J18		1.820.710.00
			5	1	19	35				RECORD AMPLIFIER, CH20	J19		1.820.811.00
			5	1	20	35				HF-DRIVER, CH20	J20		1.820.813.00
			5	1	21	25A				BUS CONVERTER	J21		1.820.717.00
			5	2	1	35				LINE AMPLIFIER, CH21	J01		1.820.715.00
			5	2	2	29A				CONTROLLER INTERNAL NRS CH21	J02		1.820.815.00
			5	2	3	35				REPRODUCE AMPLIFIER, CH21	J03		1.820.710.00
			5	2	4	35				RECORD AMPLIFIER, CH21	J04		1.820.811.00
			5	2	5	35				HF-DRIVER, CH21	J05		1.820.813.00
			5	2	6	35				LINE AMPLIFIER, CH22	J06		1.820.715.00
			5	2	7	29A				CONTROLLER INTERNAL NRS CH22	J07		1.820.815.00
			5	2	8	35				REPRODUCE AMPLIFIER, CH22	J08		1.820.710.00
			5	2	9	35				RECORD AMPLIFIER, CH22	J09		1.820.811.00
			5	2	10	35				HF-DRIVER, CH22	J10		1.820.813.00
			5	2	11	35				LINE AMPLIFIER, CH23	J11		1.820.715.00
			5	2	12	29A				CONTROLLER INTERNAL NRS CH23	J12		1.820.815.00
			5	2	13	35				REPRODUCE AMPLIFIER, CH23	J13		1.820.710.00
			5	2	14	35				RECORD AMPLIFIER, CH23	J14		1.820.811.00
			5	2	15	35				HF-DRIVER, CH23	J15		1.820.813.00
			5	2	16	35				LINE AMPLIFIER, CH24	J16		1.820.715.00
			5	2	17	29A				CONTROLLER INTERNAL NRS CH24	J17		1.820.815.00
			5	2	18	35				REPRODUCE AMPLIFIER, CH24	J18		1.820.710.00
			5	2	19	35				RECORD AMPLIFIER, CH24	J19		1.820.811.00
			5	2	20	35				HF-DRIVER, CH24	J20		1.820.813.00
			5	2	21	25A				BUS CONVERTER	J21		1.820.717.00

WILLI STUDER AG	SIGNAL WIRE LIST	89/07/20	9:25	PAGE 107
* TAPE TRANSPORT & AUDIO MCH *		89/04/19 - 00		

SIGNAL NAME	COLOR	MI	ASY	GRP	ELM	PNT	S	LV	TYPE	DESCRIPTION OF ELEMENT		REMARK	ELEMENT NR.
CA-DATA5			3	1	1	36				LINE AMPLIFIER, CH 1	J01		1.820.715.00
			3	1	2	29B				CONTROLLER INTERNAL NRS CH 1	J02		1.820.815.00
			3	1	3	36				REPRODUCE AMPLIFIER, CH 1	J03		1.820.710.00
			3	1	4	36				RECORD AMPLIFIER, CH 1	J04		1.820.811.00
			3	1	5	36				HF-DRIVER, CH 1	J05		1.820.813.00
			3	1	6	36				LINE AMPLIFIER, CH 2	J06		1.820.715.00
			3	1	7	29B				CONTROLLER INTERNAL NRS CH 2	J07		1.820.815.00
			3	1	8	36				REPRODUCE AMPLIFIER, CH 2	J08		1.820.710.00
			3	1	9	36				RECORD AMPLIFIER, CH 2	J09		1.820.811.00
			3	1	10	36				HF-DRIVER, CH 2	J10		1.820.813.00
			3	1	11	36				LINE AMPLIFIER, CH 3	J11		1.820.715.00
			3	1	12	29B				CONTROLLER INTERNAL NRS CH 3	J12		1.820.815.00
			3	1	13	36				REPRODUCE AMPLIFIER, CH 3	J13		1.820.710.00
			3	1	14	36				RECORD AMPLIFIER, CH 3	J14		1.820.811.00
			3	1	15	36				HF-DRIVER, CH 3	J15		1.820.813.00
			3	1	16	36				LINE AMPLIFIER, CH 4	J16		1.820.715.00
			3	1	17	29B				CONTROLLER INTERNAL NRS CH 4	J17		1.820.815.00
			3	1	18	36				REPRODUCE AMPLIFIER, CH 4	J18		1.820.710.00
			3	1	19	36				RECORD AMPLIFIER, CH 4	J19		1.820.811.00
			3	1	20	36				HF-DRIVER, CH 4	J20		1.820.813.00
			3	1	21	25B				BUS CONVERTER	J21		1.820.717.00
			3	2	1	36				LINE AMPLIFIER, CH 5	J01		1.820.715.00
			3	2	2	29B				CONTROLLER INTERNAL NRS CH 5	J02		1.820.815.00
			3	2	3	36				REPRODUCE AMPLIFIER, CH 5	J03		1.820.710.00
			3	2	4	36				RECORD AMPLIFIER, CH 5	J04		1.820.811.00
			3	2	5	36				HF-DRIVER, CH 5	J05		1.820.813.00
			3	2	6	36				LINE AMPLIFIER, CH 6	J06		1.820.715.00
			3	2	7	29B				CONTROLLER INTERNAL NRS CH 6	J07		1.820.815.00
			3	2	8	36				REPRODUCE AMPLIFIER, CH 6	J08		1.820.710.00
			3	2	9	36				RECORD AMPLIFIER, CH 6	J09		1.820.811.00
			3	2	10	36				HF-DRIVER, CH 6	J10		1.820.813.00
			3	2	11	36				LINE AMPLIFIER, CH 7	J11		1.820.715.00
			3	2	12	29B				CONTROLLER INTERNAL NRS CH 7	J12		1.820.815.00
			3	2	13	36				REPRODUCE AMPLIFIER, CH 7	J13		1.820.710.00
			3	2	14	36				RECORD AMPLIFIER, CH 7	J14		1.820.811.00
			3	2	15	36				HF-DRIVER, CH 7	J15		1.820.813.00
			3	2	16	36				LINE AMPLIFIER, CH 8	J16		1.820.715.00
			3	2	17	29B				CONTROLLER INTERNAL NRS CH 8	J17		1.820.815.00
			3	2	18	36				REPRODUCE AMPLIFIER, CH 8	J18		1.820.710.00
			3	2	19	36				RECORD AMPLIFIER, CH 8	J19		1.820.811.00
			3	2	20	36				HF-DRIVER, CH 8	J20		1.820.813.00
			3	2	21	25B				BUS CONVERTER	J21		1.820.717.00
			4	1	1	36				LINE AMPLIFIER, CH 9	J01		1.820.715.00
			4	1	2	29B				CONTROLLER INTERNAL NRS CH 9	J02		1.820.815.00
			4	1	3	36				REPRODUCE AMPLIFIER, CH 9	J03		1.820.710.00
			4	1	4	36				RECORD AMPLIFIER, CH 9	J04		1.820.811.00
			4	1	5	36				HF-DRIVER, CH 9	J05		1.820.813.00
			4	1	6	36				LINE AMPLIFIER, CH10	J06		1.820.715.00
			4	1	7	29B				CONTROLLER INTERNAL NRS CH10	J07		1.820.815.00
			4	1	8	36				REPRODUCE AMPLIFIER, CH10	J08		1.820.710.00
			4	1	9	36				RECORD AMPLIFIER, CH10	J09		1.820.811.00
			4	1	10	36				HF-DRIVER, CH10	J10		1.820.813.00
			4	1	11	36				LINE AMPLIFIER, CH11	J11		1.820.715.00
			4	1	12	29B				CONTROLLER INTERNAL NRS CH11	J12		1.820.815.00
			4	1	13	36				REPRODUCE AMPLIFIER, CH11	J13		1.820.710.00

WILLI STUDER AG	SIGNAL WIRE LIST	89/07/20	9:25	PAGE 108
* TAPE TRANSPORT & AUDIO MCH *		89/04/19 - 00		

SIGNAL NAME	COLOR	MI	ASY	GRP	ELM	PNT	S	LV	TYPE	DESCRIPTION OF ELEMENT		REMARK	ELEMENT NR.
<<-- CONT.OF			4	1	14	36				RECORD AMPLIFIER, CH11	J14		1.820.811.00
CA-DATA5			4	1	15	36				HF-DRIVER, CH11	J15		1.820.813.00
			4	1	16	36				LINE AMPLIFIER, CH12	J16		1.820.715.00
			4	1	17	29B				CONTROLLER INTERNAL NRS CH12	J17		1.820.815.00
			4	1	18	36				REPRODUCE AMPLIFIER, CH12	J18		1.820.710.00
			4	1	19	36				RECORD AMPLIFIER, CH12	J19		1.820.811.00
			4	1	20	36				HF-DRIVER, CH12	J20		1.820.813.00
			4	1	21	25B				BUS CONVERTER	J21		1.820.717.00
			4	2	1	36				LINE AMPLIFIER, CH13	J01		1.820.715.00
			4	2	2	29B				CONTROLLER INTERNAL NRS CH13	J02		1.820.815.00
			4	2	3	36				REPRODUCE AMPLIFIER, CH13	J03		1.820.710.00
			4	2	4	36				RECORD AMPLIFIER, CH13	J04		1.820.811.00
			4	2	5	36				HF-DRIVER, CH13	J05		1.820.813.00
			4	2	6	36				LINE AMPLIFIER, CH14	J06		1.820.715.00
			4	2	7	29B				CONTROLLER INTERNAL NRS CH14	J07		1.820.815.00
			4	2	8	36				REPRODUCE AMPLIFIER, CH14	J08		1.820.710.00
			4	2	9	36				RECORD AMPLIFIER, CH14	J09		1.820.811.00
			4	2	10	36				HF-DRIVER, CH14	J10		1.820.813.00
			4	2	11	36				LINE AMPLIFIER, CH15	J11		1.820.715.00
			4	2	12	29B				CONTROLLER INTERNAL NRS CH15	J12		1.820.815.00
			4	2	13	36				REPRODUCE AMPLIFIER, CH15	J13		1.820.710.00
			4	2	14	36				RECORD AMPLIFIER, CH15	J14		1.820.811.00
			4	2	15	36				HF-DRIVER, CH15	J15		1.820.813.00
			4	2	16	36				LINE AMPLIFIER, CH16	J16		1.820.715.00
			4	2	17	29B				CONTROLLER INTERNAL NRS CH16	J17		1.820.815.00
			4	2	18	36				REPRODUCE AMPLIFIER, CH16	J18		1.820.710.00
			4	2	19	36				RECORD AMPLIFIER, CH16	J19		1.820.811.00
			4	2	20	36				HF-DRIVER, CH16	J20		1.820.813.00
			4	2	21	25B				BUS CONVERTER	J21		1.820.717.00
			5	1	1	36				LINE AMPLIFIER, CH17	J01		1.820.715.00
			5	1	2	29B				CONTROLLER INTERNAL NRS CH17	J02		1.820.815.00
			5	1	3	36				REPRODUCE AMPLIFIER, CH17	J03		1.820.710.00
			5	1	4	36				RECORD AMPLIFIER, CH17	J04		1.820.811.00
			5	1	5	36				HF-DRIVER, CH17	J05		1.820.813.00
			5	1	6	36				LINE AMPLIFIER, CH18	J06		1.820.715.00
			5	1	7	29B				CONTROLLER INTERNAL NRS CH18	J07		1.820.815.00
			5	1	8	36				REPRODUCE AMPLIFIER, CH18	J08		1.820.710.00
			5	1	9	36				RECORD AMPLIFIER, CH18	J09		1.820.811.00
			5	1	10	36				HF-DRIVER, CH18	J10		1.820.813.00
			5	1	11	36				LINE AMPLIFIER, CH19	J11		1.820.715.00
			5	1	12	29B				CONTROLLER INTERNAL NRS CH19	J12		1.820.815.00
			5	1	13	36				REPRODUCE AMPLIFIER, CH19	J13		1.820.710.00
			5	1	14	36				RECORD AMPLIFIER, CH19	J14		1.820.811.00
			5	1	15	36				HF-DRIVER, CH19	J15		1.820.813.00
			5	1	16	36				LINE AMPLIFIER, CH20	J16		1.820.715.00
			5	1	17	29B				CONTROLLER INTERNAL NRS CH20	J17		1.820.815.00
			5	1	18	36				REPRODUCE AMPLIFIER, CH20	J18		1.820.710.00
			5	1	19	36				RECORD AMPLIFIER, CH20	J19		1.820.811.00
			5	1	20	36				HF-DRIVER, CH20	J20		1.820.813.00
			5	1	21	25B				BUS CONVERTER	J21		1.820.717.00
			5	2	1	36				LINE AMPLIFIER, CH21	J01		1.820.715.00
			5	2	2	29B				CONTROLLER INTERNAL NRS CH21	J02		1.820.815.00
			5	2	3	36				REPRODUCE AMPLIFIER, CH21	J03		1.820.710.00
			5	2	4	36				RECORD AMPLIFIER, CH21	J04		1.820.811.00

```
*    WILLI STUDER AG   *    S I G N A L     W I R E     L I S T                 *  89/07/20  *   9:25  *   P A G E 109   *
*                           * TAPE TRANSPORT & AUDIO MCH *                       *  89/04/19 - 00                       *
```

SIGNAL NAME	COLOR	MI	ASY	GRP	ELM	PNT	S	LV	TYPE	DESCRIPTION OF ELEMENT		REMARK	ELEMENT NR.
<<-- CONT.OF			5	2	5	36				HF-DRIVER, CH21	J05		1.820.813.00
CA-DATA5			5	2	6	36				LINE AMPLIFIER, CH22	J06		1.820.715.00
			5	2	7	29B				CONTROLLER INTERNAL NRS CH22	J07		1.820.815.00
			5	2	8	36				REPRODUCE AMPLIFIER, CH22	J08		1.820.710.00
			5	2	9	36				RECORD AMPLIFIER, CH22	J09		1.820.811.00
			5	2	10	36				HF-DRIVER, CH22	J10		1.820.813.00
			5	2	11	36				LINE AMPLIFIER, CH23	J11		1.820.715.00
			5	2	12	29B				CONTROLLER INTERNAL NRS CH23	J12		1.820.815.00
			5	2	13	36				REPRODUCE AMPLIFIER, CH23	J13		1.820.710.00
			5	2	14	36				RECORD AMPLIFIER, CH23	J14		1.820.811.00
			5	2	15	36				HF-DRIVER, CH23	J15		1.820.813.00
			5	2	16	36				LINE AMPLIFIER, CH24	J16		1.820.715.00
			5	2	17	29B				CONTROLLER INTERNAL NRS CH24	J17		1.820.815.00
			5	2	18	36				REPRODUCE AMPLIFIER, CH24	J18		1.820.710.00
			5	2	19	36				RECORD AMPLIFIER, CH24	J19		1.820.811.00
			5	2	20	36				HF-DRIVER, CH24	J20		1.820.813.00
			5	2	21	25B				BUS CONVERTER	J21		1.820.717.00
CA-DATA6			3	1	1	37				LINE AMPLIFIER, CH 1	J01		1.820.715.00
			3	1	2	30A				CONTROLLER INTERNAL NRS CH 1	J02		1.820.815.00
			3	1	3	37				REPRODUCE AMPLIFIER, CH 1	J03		1.820.710.00
			3	1	4	37				RECORD AMPLIFIER, CH 1	J04		1.820.811.00
			3	1	5	37				HF-DRIVER, CH 1	J05		1.820.813.00
			3	1	6	37				LINE AMPLIFIER, CH 2	J06		1.820.715.00
			3	1	7	30A				CONTROLLER INTERNAL NRS CH 2	J07		1.820.815.00
			3	1	8	37				REPRODUCE AMPLIFIER, CH 2	J08		1.820.710.00
			3	1	9	37				RECORD AMPLIFIER, CH 2	J09		1.820.811.00
			3	1	10	37				HF-DRIVER, CH 2	J10		1.820.813.00
			3	1	11	37				LINE AMPLIFIER, CH 3	J11		1.820.715.00
			3	1	12	30A				CONTROLLER INTERNAL NRS CH 3	J12		1.820.815.00
			3	1	13	37				REPRODUCE AMPLIFIER, CH 3	J13		1.820.710.00
			3	1	14	37				RECORD AMPLIFIER, CH 3	J14		1.820.811.00
			3	1	15	37				HF-DRIVER, CH 3	J15		1.820.813.00
			3	1	16	37				LINE AMPLIFIER, CH 4	J16		1.820.715.00
			3	1	17	30A				CONTROLLER INTERNAL NRS CH 4	J17		1.820.815.00
			3	1	18	37				REPRODUCE AMPLIFIER, CH 4	J18		1.820.710.00
			3	1	19	37				RECORD AMPLIFIER, CH 4	J19		1.820.811.00
			3	1	20	37				HF-DRIVER, CH 4	J20		1.820.813.00
			3	1	21	26A				BUS CONVERTER	J21		1.820.717.00
			3	2	1	37				LINE AMPLIFIER, CH 5	J01		1.820.715.00
			3	2	2	30A				CONTROLLER INTERNAL NRS CH 5	J02		1.820.815.00
			3	2	3	37				REPRODUCE AMPLIFIER, CH 5	J03		1.820.710.00
			3	2	4	37				RECORD AMPLIFIER, CH 5	J04		1.820.811.00
			3	2	5	37				HF-DRIVER, CH 5	J05		1.820.813.00
			3	2	6	37				LINE AMPLIFIER, CH 6	J06		1.820.715.00
			3	2	7	30A				CONTROLLER INTERNAL NRS CH 6	J07		1.820.815.00
			3	2	8	37				REPRODUCE AMPLIFIER, CH 6	J08		1.820.710.00
			3	2	9	37				RECORD AMPLIFIER, CH 6	J09		1.820.811.00
			3	2	10	37				HF-DRIVER, CH 6	J10		1.820.813.00
			3	2	11	37				LINE AMPLIFIER, CH 7	J11		1.820.715.00
			3	2	12	30A				CONTROLLER INTERNAL NRS CH 7	J12		1.820.815.00
			3	2	13	37				REPRODUCE AMPLIFIER, CH 7	J13		1.820.710.00
			3	2	14	37				RECORD AMPLIFIER, CH 7	J14		1.820.811.00
			3	2	15	37				HF-DRIVER, CH 7	J15		1.820.813.00

```
*    WILLI STUDER AG   *    S I G N A L     W I R E     L I S T                 *  89/07/20  *   9:25  *   P A G E 110   *
*                           * TAPE TRANSPORT & AUDIO MCH *                       *  89/04/19 - 00                       *
```

SIGNAL NAME	COLOR	MI	ASY	GRP	ELM	PNT	S	LV	TYPE	DESCRIPTION OF ELEMENT		REMARK	ELEMENT NR.
<<-- CONT.OF			3	2	16	37				LINE AMPLIFIER, CH 8	J16		1.820.715.00
CA-DATA6			3	2	17	30A				CONTROLLER INTERNAL NRS CH 8	J17		1.820.815.00
			3	2	18	37				REPRODUCE AMPLIFIER, CH 8	J18		1.820.710.00
			3	2	19	37				RECORD AMPLIFIER, CH 8	J19		1.820.811.00
			3	2	20	37				HF-DRIVER, CH 8	J20		1.820.813.00
			3	2	21	26A				BUS CONVERTER	J21		1.820.717.00
			4	1	1	37				LINE AMPLIFIER, CH 9	J01		1.820.715.00
			4	1	2	30A				CONTROLLER INTERNAL NRS CH 9	J02		1.820.815.00
			4	1	3	37				REPRODUCE AMPLIFIER, CH 9	J03		1.820.710.00
			4	1	4	37				RECORD AMPLIFIER, CH 9	J04		1.820.811.00
			4	1	5	37				HF-DRIVER, CH 9	J05		1.820.813.00
			4	1	6	37				LINE AMPLIFIER, CH10	J06		1.820.715.00
			4	1	7	30A				CONTROLLER INTERNAL NRS CH10	J07		1.820.815.00
			4	1	8	37				REPRODUCE AMPLIFIER, CH10	J08		1.820.710.00
			4	1	9	37				RECORD AMPLIFIER, CH10	J09		1.820.811.00
			4	1	10	37				HF-DRIVER, CH10	J10		1.820.813.00
			4	1	11	37				LINE AMPLIFIER, CH11	J11		1.820.715.00
			4	1	12	30A				CONTROLLER INTERNAL NRS CH11	J12		1.820.815.00
			4	1	13	37				REPRODUCE AMPLIFIER, CH11	J13		1.820.710.00
			4	1	14	37				RECORD AMPLIFIER, CH11	J14		1.820.811.00
			4	1	15	37				HF-DRIVER, CH11	J15		1.820.813.00
			4	1	16	37				LINE AMPLIFIER, CH12	J16		1.820.715.00
			4	1	17	30A				CONTROLLER INTERNAL NRS CH12	J17		1.820.815.00
			4	1	18	37				REPRODUCE AMPLIFIER, CH12	J18		1.820.710.00
			4	1	19	37				RECORD AMPLIFIER, CH12	J19		1.820.811.00
			4	1	20	37				HF-DRIVER, CH12	J20		1.820.813.00
			4	1	21	26A				BUS CONVERTER	J21		1.820.717.00
			4	2	1	37				LINE AMPLIFIER, CH13	J01		1.820.715.00
			4	2	2	30A				CONTROLLER INTERNAL NRS CH13	J02		1.820.815.00
			4	2	3	37				REPRODUCE AMPLIFIER, CH13	J03		1.820.710.00
			4	2	4	37				RECORD AMPLIFIER, CH13	J04		1.820.811.00
			4	2	5	37				HF-DRIVER, CH13	J05		1.820.813.00
			4	2	6	37				LINE AMPLIFIER, CH14	J06		1.820.715.00
			4	2	7	30A				CONTROLLER INTERNAL NRS CH14	J07		1.820.815.00
			4	2	8	37				REPRODUCE AMPLIFIER, CH14	J08		1.820.710.00
			4	2	9	37				RECORD AMPLIFIER, CH14	J09		1.820.811.00
			4	2	10	37				HF-DRIVER, CH14	J10		1.820.813.00
			4	2	11	37				LINE AMPLIFIER, CH15	J11		1.820.715.00
			4	2	12	30A				CONTROLLER INTERNAL NRS CH15	J12		1.820.815.00
			4	2	13	37				REPRODUCE AMPLIFIER, CH15	J13		1.820.710.00
			4	2	14	37				RECORD AMPLIFIER, CH15	J14		1.820.811.00
			4	2	15	37				HF-DRIVER, CH15	J15		1.820.813.00
			4	2	16	37				LINE AMPLIFIER, CH16	J16		1.820.715.00
			4	2	17	30A				CONTROLLER INTERNAL NRS CH16	J17		1.820.815.00
			4	2	18	37				REPRODUCE AMPLIFIER, CH16	J18		1.820.710.00
			4	2	19	37				RECORD AMPLIFIER, CH16	J19		1.820.811.00
			4	2	20	37				HF-DRIVER, CH16	J20		1.820.813.00
			4	2	21	26A				BUS CONVERTER	J21		1.820.717.00
			5	1	1	37				LINE AMPLIFIER, CH17	J01		1.820.715.00
			5	1	2	30A				CONTROLLER INTERNAL NRS CH17	J02		1.820.815.00
			5	1	3	37				REPRODUCE AMPLIFIER, CH17	J03		1.820.710.00
			5	1	4	37				RECORD AMPLIFIER, CH17	J04		1.820.811.00
			5	1	5	37				HF-DRIVER, CH17	J05		1.820.813.00
			5	1	6	37				LINE AMPLIFIER, CH18	J06		1.820.715.00

```
*    WILLI STUDER AG    *    S I G N A L    W I R E    L I S T                    * 89/07/20  *   9:25  *   P A G E 111   *
*                                * TAPE TRANSPORT & AUDIO MCH *                    * 89/04/19 - 00                          *
```

SIGNAL NAME	COLOR	MI	ASY	GRP	ELM	PNT	S	LV	TYPE	DESCRIPTION OF ELEMENT		REMARK	ELEMENT NR.
<<-- CONT.OF			5	1	7	30A				CONTROLLER INTERNAL NRS CH18	J07		1.820.815.00
CA-DATA6			5	1	8	37				REPRODUCE AMPLIFIER, CH18	J08		1.820.710.00
			5	1	9	37				RECORD AMPLIFIER, CH18	J09		1.820.811.00
			5	1	10	37				HF-DRIVER, CH18	J10		1.820.813.00
			5	1	11	37				LINE AMPLIFIER, CH19	J11		1.820.715.00
			5	1	12	30A				CONTROLLER INTERNAL NRS CH19	J12		1.820.815.00
			5	1	13	37				REPRODUCE AMPLIFIER, CH19	J13		1.820.710.00
			5	1	14	37				RECORD AMPLIFIER, CH19	J14		1.820.811.00
			5	1	15	37				HF-DRIVER, CH19	J15		1.820.813.00
			5	1	16	37				LINE AMPLIFIER, CH20	J16		1.820.715.00
			5	1	17	30A				CONTROLLER INTERNAL NRS CH20	J17		1.820.815.00
			5	1	18	37				REPRODUCE AMPLIFIER, CH20	J18		1.820.710.00
			5	1	19	37				RECORD AMPLIFIER, CH20	J19		1.820.811.00
			5	1	20	37				HF-DRIVER, CH20	J20		1.820.813.00
			5	1	21	26A				BUS CONVERTER	J21		1.820.717.00
			5	2	1	37				LINE AMPLIFIER, CH21	J01		1.820.715.00
			5	2	2	30A				CONTROLLER INTERNAL NRS CH21	J02		1.820.815.00
			5	2	3	37				REPRODUCE AMPLIFIER, CH21	J03		1.820.710.00
			5	2	4	37				RECORD AMPLIFIER, CH21	J04		1.820.811.00
			5	2	5	37				HF-DRIVER, CH21	J05		1.820.813.00
			5	2	6	37				LINE AMPLIFIER, CH22	J06		1.820.715.00
			5	2	7	30A				CONTROLLER INTERNAL NRS CH22	J07		1.820.815.00
			5	2	8	37				REPRODUCE AMPLIFIER, CH22	J08		1.820.710.00
			5	2	9	37				RECORD AMPLIFIER, CH22	J09		1.820.811.00
			5	2	10	37				HF-DRIVER, CH22	J10		1.820.813.00
			5	2	11	37				LINE AMPLIFIER, CH23	J11		1.820.715.00
			5	2	12	30A				CONTROLLER INTERNAL NRS CH23	J12		1.820.815.00
			5	2	13	37				REPRODUCE AMPLIFIER, CH23	J13		1.820.710.00
			5	2	14	37				RECORD AMPLIFIER, CH23	J14		1.820.811.00
			5	2	15	37				HF-DRIVER, CH23	J15		1.820.813.00
			5	2	16	37				LINE AMPLIFIER, CH24	J16		1.820.715.00
			5	2	17	30A				CONTROLLER INTERNAL NRS CH24	J17		1.820.815.00
			5	2	18	37				REPRODUCE AMPLIFIER, CH24	J18		1.820.710.00
			5	2	19	37				RECORD AMPLIFIER, CH24	J19		1.820.811.00
			5	2	20	37				HF-DRIVER, CH24	J20		1.820.813.00
			5	2	21	26A				BUS CONVERTER	J21		1.820.717.00
CA-DATA7			3	1	1	38				LINE AMPLIFIER, CH 1	J01		1.820.715.00
			3	1	2	30B				CONTROLLER INTERNAL NRS CH 1	J02		1.820.815.00
			3	1	3	38				REPRODUCE AMPLIFIER, CH 1	J03		1.820.710.00
			3	1	4	38				RECORD AMPLIFIER, CH 1	J04		1.820.811.00
			3	1	5	38				HF-DRIVER, CH 1	J05		1.820.813.00
			3	1	6	38				LINE AMPLIFIER, CH 2	J06		1.820.715.00
			3	1	7	30B				CONTROLLER INTERNAL NRS CH 2	J07		1.820.815.00
			3	1	8	38				REPRODUCE AMPLIFIER, CH 2	J08		1.820.710.00
			3	1	9	38				RECORD AMPLIFIER, CH 2	J09		1.820.811.00
			3	1	10	38				HF-DRIVER, CH 2	J10		1.820.813.00
			3	1	11	38				LINE AMPLIFIER, CH 3	J11		1.820.715.00
			3	1	12	30B				CONTROLLER INTERNAL NRS CH 3	J12		1.820.815.00
			3	1	13	38				REPRODUCE AMPLIFIER, CH 3	J13		1.820.710.00
			3	1	14	38				RECORD AMPLIFIER, CH 3	J14		1.820.811.00
			3	1	15	38				HF-DRIVER, CH 3	J15		1.820.813.00
			3	1	16	38				LINE AMPLIFIER, CH 4	J16		1.820.715.00
			3	1	17	30B				CONTROLLER INTERNAL NRS CH 4	J17		1.820.815.00

```
*    WILLI STUDER AG    *    S I G N A L    W I R E    L I S T                    * 89/07/20  *   9:25  *   P A G E 112   *
*                                * TAPE TRANSPORT & AUDIO MCH *                    * 89/04/19 - 00                          *
```

SIGNAL NAME	COLOR	MI	ASY	GRP	ELM	PNT	S	LV	TYPE	DESCRIPTION OF ELEMENT		REMARK	ELEMENT NR.
<<-- CONT.OF			3	1	18	38				REPRODUCE AMPLIFIER, CH 4	J18		1.820.710.00
CA-DATA7			3	1	19	38				RECORD AMPLIFIER, CH 4	J19		1.820.811.00
			3	1	20	38				HF-DRIVER, CH 4	J20		1.820.813.00
			3	1	21	26B				BUS CONVERTER	J21		1.820.717.00
			3	2	1	38				LINE AMPLIFIER, CH 5	J01		1.820.715.00
			3	2	2	30B				CONTROLLER INTERNAL NRS CH 5	J02		1.820.815.00
			3	2	3	38				REPRODUCE AMPLIFIER, CH 5	J03		1.820.710.00
			3	2	4	38				RECORD AMPLIFIER, CH 5	J04		1.820.811.00
			3	2	5	38				HF-DRIVER, CH 5	J05		1.820.813.00
			3	2	6	38				LINE AMPLIFIER, CH 6	J06		1.820.715.00
			3	2	7	30B				CONTROLLER INTERNAL NRS CH 6	J07		1.820.815.00
			3	2	8	38				REPRODUCE AMPLIFIER, CH 6	J08		1.820.710.00
			3	2	9	38				RECORD AMPLIFIER, CH 6	J09		1.820.811.00
			3	2	10	38				HF-DRIVER, CH 6	J10		1.820.813.00
			3	2	11	38				LINE AMPLIFIER, CH 7	J11		1.820.715.00
			3	2	12	30B				CONTROLLER INTERNAL NRS CH 7	J12		1.820.815.00
			3	2	13	38				REPRODUCE AMPLIFIER, CH 7	J13		1.820.710.00
			3	2	14	38				RECORD AMPLIFIER, CH 7	J14		1.820.811.00
			3	2	15	38				HF-DRIVER, CH 7	J15		1.820.813.00
			3	2	16	38				LINE AMPLIFIER, CH 8	J16		1.820.715.00
			3	2	17	30B				CONTROLLER INTERNAL NRS CH 8	J17		1.820.815.00
			3	2	18	38				REPRODUCE AMPLIFIER, CH 8	J18		1.820.710.00
			3	2	19	38				RECORD AMPLIFIER, CH 8	J19		1.820.811.00
			3	2	20	38				HF-DRIVER, CH 8	J20		1.820.813.00
			3	2	21	26B				BUS CONVERTER	J21		1.820.717.00
			4	1	1	38				LINE AMPLIFIER, CH 9	J01		1.820.715.00
			4	1	2	30B				CONTROLLER INTERNAL NRS CH 9	J02		1.820.815.00
			4	1	3	38				REPRODUCE AMPLIFIER, CH 9	J03		1.820.710.00
			4	1	4	38				RECORD AMPLIFIER, CH 9	J04		1.820.811.00
			4	1	5	38				HF-DRIVER, CH 9	J05		1.820.813.00
			4	1	6	38				LINE AMPLIFIER, CH10	J06		1.820.715.00
			4	1	7	30B				CONTROLLER INTERNAL NRS CH10	J07		1.820.815.00
			4	1	8	38				REPRODUCE AMPLIFIER, CH10	J08		1.820.710.00
			4	1	9	38				RECORD AMPLIFIER, CH10	J09		1.820.811.00
			4	1	10	38				HF-DRIVER, CH10	J10		1.820.813.00
			4	1	11	38				LINE AMPLIFIER, CH11	J11		1.820.715.00
			4	1	12	30B				CONTROLLER INTERNAL NRS CH11	J12		1.820.815.00
			4	1	13	38				REPRODUCE AMPLIFIER, CH11	J13		1.820.710.00
			4	1	14	38				RECORD AMPLIFIER, CH11	J14		1.820.811.00
			4	1	15	38				HF-DRIVER, CH11	J15		1.820.813.00
			4	1	16	38				LINE AMPLIFIER, CH12	J16		1.820.715.00
			4	1	17	30B				CONTROLLER INTERNAL NRS CH12	J17		1.820.815.00
			4	1	18	38				REPRODUCE AMPLIFIER, CH12	J18		1.820.710.00
			4	1	19	38				RECORD AMPLIFIER, CH12	J19		1.820.811.00
			4	1	20	38				HF-DRIVER, CH12	J20		1.820.813.00
			4	1	21	26B				BUS CONVERTER	J21		1.820.717.00
			4	2	1	38				LINE AMPLIFIER, CH13	J01		1.820.715.00
			4	2	2	30B				CONTROLLER INTERNAL NRS CH13	J02		1.820.815.00
			4	2	3	38				REPRODUCE AMPLIFIER, CH13	J03		1.820.710.00
			4	2	4	38				RECORD AMPLIFIER, CH13	J04		1.820.811.00
			4	2	5	38				HF-DRIVER, CH13	J05		1.820.813.00
			4	2	6	38				LINE AMPLIFIER, CH14	J06		1.820.715.00
			4	2	7	30B				CONTROLLER INTERNAL NRS CH14	J07		1.820.815.00
			4	2	8	38				REPRODUCE AMPLIFIER, CH14	J08		1.820.710.00

```
*    WILLI STUDER AG   *    S I G N A L     W I R E     L I S T              * 89/07/20 *   9:25 *   P A G E 113   *
*                           * TAPE TRANSPORT & AUDIO MCH *                    * '89/04/19 - 00                        *
```

SIGNAL NAME	COLOR	MI	ASY	GRP	ELM	PNT	S	LV	TYPE	DESCRIPTION OF ELEMENT		REMARK	ELEMENT NR.
<<-- CONT.OF			4	2	9	38				RECORD AMPLIFIER, CH14	J09		1.820.811.00
CA-DATA7			4	2	10	38				HF-DRIVER, CH14	J10		1.820.813.00
			4	2	11	38				LINE AMPLIFIER, CH15	J11		1.820.715.00
			4	2	12	30B				CONTROLLER INTERNAL NRS CH15	J12		1.820.815.00
			4	2	13	38				REPRODUCE AMPLIFIER, CH15	J13		1.820.710.00
			4	2	14	38				RECORD AMPLIFIER, CH15	J14		1.820.811.00
			4	2	15	38				HF-DRIVER, CH15	J15		1.820.813.00
			4	2	16	38				LINE AMPLIFIER, CH16	J16		1.820.715.00
			4	2	17	30B				CONTROLLER INTERNAL NRS CH16	J17		1.820.815.00
			4	2	18	38				REPRODUCE AMPLIFIER, CH16	J18		1.820.710.00
			4	2	19	38				RECORD AMPLIFIER, CH16	J19		1.820.811.00
			4	2	20	38				HF-DRIVER, CH16	J20		1.820.813.00
			4	2	21	26B				BUS CONVERTER	J21		1.820.717.00
			5	1	1	38				LINE AMPLIFIER, CH17	J01		1.820.715.00
			5	1	2	30B				CONTROLLER INTERNAL NRS CH17	J02		1.820.815.00
			5	1	3	38				REPRODUCE AMPLIFIER, CH17	J03		1.820.710.00
			5	1	4	38				RECORD AMPLIFIER, CH17	J04		1.820.811.00
			5	1	5	38				HF-DRIVER, CH17	J05		1.820.813.00
			5	1	6	38				LINE AMPLIFIER, CH18	J06		1.820.715.00
			5	1	7	30B				CONTROLLER INTERNAL NRS CH18	J07		1.820.815.00
			5	1	8	38				REPRODUCE AMPLIFIER, CH18	J08		1.820.710.00
			5	1	9	38				RECORD AMPLIFIER, CH18	J09		1.820.811.00
			5	1	10	38				HF-DRIVER, CH18	J10		1.820.813.00
			5	1	11	38				LINE AMPLIFIER, CH19	J11		1.820.715.00
			5	1	12	30B				CONTROLLER INTERNAL NRS CH19	J12		1.820.815.00
			5	1	13	38				REPRODUCE AMPLIFIER, CH19	J13		1.820.710.00
			5	1	14	38				RECORD AMPLIFIER, CH19	J14		1.820.811.00
			5	1	15	38				HF-DRIVER, CH19	J15		1.820.813.00
			5	1	16	38				LINE AMPLIFIER, CH20	J16		1.820.715.00
			5	1	17	30B				CONTROLLER INTERNAL NRS CH20	J17		1.820.815.00
			5	1	18	38				REPRODUCE AMPLIFIER, CH20	J18		1.820.710.00
			5	1	19	38				RECORD AMPLIFIER, CH20	J19		1.820.811.00
			5	1	20	38				HF-DRIVER, CH20	J20		1.820.813.00
			5	1	21	26B				BUS CONVERTER	J21		1.820.717.00
			5	2	1	38				LINE AMPLIFIER, CH21	J01		1.820.715.00
			5	2	2	30B				CONTROLLER INTERNAL NRS CH21	J02		1.820.815.00
			5	2	3	38				REPRODUCE AMPLIFIER, CH21	J03		1.820.710.00
			5	2	4	38				RECORD AMPLIFIER, CH21	J04		1.820.811.00
			5	2	5	38				HF-DRIVER, CH21	J05		1.820.813.00
			5	2	6	38				LINE AMPLIFIER, CH22	J06		1.820.715.00
			5	2	7	30B				CONTROLLER INTERNAL NRS CH22	J07		1.820.815.00
			5	2	8	38				REPRODUCE AMPLIFIER, CH22	J08		1.820.710.00
			5	2	9	38				RECORD AMPLIFIER, CH22	J09		1.820.811.00
			5	2	10	38				HF-DRIVER, CH22	J10		1.820.813.00
			5	2	11	38				LINE AMPLIFIER, CH23	J11		1.820.715.00
			5	2	12	30B				CONTROLLER INTERNAL NRS CH23	J12		1.820.815.00
			5	2	13	38				REPRODUCE AMPLIFIER, CH23	J13		1.820.710.00
			5	2	14	38				RECORD AMPLIFIER, CH23	J14		1.820.811.00
			5	2	15	38				HF-DRIVER, CH23	J15		1.820.813.00
			5	2	16	38				LINE AMPLIFIER, CH24	J16		1.820.715.00
			5	2	17	30B				CONTROLLER INTERNAL NRS CH24	J17		1.820.815.00
			5	2	18	38				REPRODUCE AMPLIFIER, CH24	J18		1.820.710.00
			5	2	19	38				RECORD AMPLIFIER, CH24	J19		1.820.811.00
			5	2	20	38				HF-DRIVER, CH24	J20		1.820.813.00
			5	2	21	26B				BUS CONVERTER	J21		1.820.717.00

* WILLI STUDER AG * S I G N A L W I R E L I S T * 89/07/20 * 9:25 * P A G E 114 *

* * TAPE TRANSPORT & AUDIO MCH * * 89/04/19 - 00 *

SIGNAL NAME	COLOR	MI	ASY	GRP	ELM	PNT	S	LV	TYPE	DESCRIPTION OF ELEMENT		REMARK	ELEMENT NR.
CA-EQL01			3	1	1	16				LINE AMPLIFIER, CH 1	J01		1.820.715.00
			3	1	3	15				REPRODUCE AMPLIFIER, CH 1	J03		1.820.710.00
CA-EQL02			3	1	6	16				LINE AMPLIFIER, CH 2	J06		1.820.715.00
			3	1	8	15				REPRODUCE AMPLIFIER, CH 2	J08		1.820.710.00
CA-EQL03			3	1	11	16				LINE AMPLIFIER, CH 3	J11		1.820.715.00
			3	1	13	15				REPRODUCE AMPLIFIER, CH 3	J13		1.820.710.00
CA-EQL04			3	1	16	16				LINE AMPLIFIER, CH 4	J16		1.820.715.00
			3	1	18	15				REPRODUCE AMPLIFIER, CH 4	J18		1.820.710.00
CA-EQL05			3	2	1	16				LINE AMPLIFIER, CH 5	J01		1.820.715.00
			3	2	3	15				REPRODUCE AMPLIFIER, CH 5	J03		1.820.710.00
CA-EQL06			3	2	6	16				LINE AMPLIFIER, CH 6	J06		1.820.715.00
			3	2	8	15				REPRODUCE AMPLIFIER, CH 6	J08		1.820.710.00
CA-EQL07			3	2	11	16				LINE AMPLIFIER, CH 7	J11		1.820.715.00
			3	2	13	15				REPRODUCE AMPLIFIER, CH 7	J13		1.820.710.00
CA-EQL08			3	2	16	16				LINE AMPLIFIER, CH 8	J16		1.820.715.00
			3	2	18	15				REPRODUCE AMPLIFIER, CH 8	J18		1.820.710.00
CA-EQL09			4	1	1	16				LINE AMPLIFIER, CH 9	J01		1.820.715.00
			4	1	3	15				REPRODUCE AMPLIFIER, CH 9	J03		1.820.710.00
CA-EQL10			4	1	6	16				LINE AMPLIFIER, CH10	J06		1.820.715.00
			4	1	8	15				REPRODUCE AMPLIFIER, CH10	J08		1.820.710.00
CA-EQL11			4	1	11	16				LINE AMPLIFIER, CH11	J11		1.820.715.00
			4	1	13	15				REPRODUCE AMPLIFIER, CH11	J13		1.820.710.00
CA-EQL12			4	1	16	16				LINE AMPLIFIER, CH12	J16		1.820.715.00
			4	1	18	15				REPRODUCE AMPLIFIER, CH12	J18		1.820.710.00
CA-EQL13			4	2	1	16				LINE AMPLIFIER, CH13	J01		1.820.715.00
			4	2	3	15				REPRODUCE AMPLIFIER, CH13	J03		1.820.710.00
CA-EQL14			4	2	6	16				LINE AMPLIFIER, CH14	J06		1.820.715.00
			4	2	8	15				REPRODUCE AMPLIFIER, CH14	J08		1.820.710.00
CA-EQL15			4	2	11	16				LINE AMPLIFIER, CH15	J11		1.820.715.00
			4	2	13	15				REPRODUCE AMPLIFIER, CH15	J13		1.820.710.00
CA-EQL16			4	2	16	16				LINE AMPLIFIER, CH16	J16		1.820.715.00
			4	2	18	15				REPRODUCE AMPLIFIER, CH16	J18		1.820.710.00
CA-EQL17			5	1	1	16				LINE AMPLIFIER, CH17	J01		1.820.715.00
			5	1	3	15				REPRODUCE AMPLIFIER, CH17	J03		1.820.710.00
CA-EQL18			5	1	6	16				LINE AMPLIFIER, CH18	J06		1.820.715.00
			5	1	8	15				REPRODUCE AMPLIFIER, CH18	J08		1.820.710.00
CA-EQL19			5	1	11	16				LINE AMPLIFIER, CH19	J11		1.820.715.00
			5	1	13	15				REPRODUCE AMPLIFIER, CH19	J13		1.820.710.00

* WILLI STUDER AG * S I G N A L W I R E L I S T * 89/07/20 * 9:25 * P A G E 115 *

* * TAPE TRANSPORT & AUDIO MCH * * 89/04/19 - 00 *

SIGNAL NAME	COLOR	MI	ASY	GRP	ELM	PNT	S	LV	TYPE	DESCRIPTION OF ELEMENT		REMARK	ELEMENT NR.
CA-EQL20			5	1	16	16				LINE AMPLIFIER, CH20	J16		1.820.715.00
			5	1	18	15				REPRODUCE AMPLIFIER, CH20	J18		1.820.710.00
CA-EQL21			5	2	1	16				LINE AMPLIFIER, CH21	J01		1.820.715.00
			5	2	3	15				REPRODUCE AMPLIFIER, CH21	J03		1.820.710.00
CA-EQL22			5	2	6	16				LINE AMPLIFIER, CH22	J06		1.820.715.00
			5	2	8	15				REPRODUCE AMPLIFIER, CH22	J08		1.820.710.00
CA-EQL23			5	2	11	16				LINE AMPLIFIER, CH23	J11		1.820.715.00
			5	2	13	15				REPRODUCE AMPLIFIER, CH23	J13		1.820.710.00
CA-EQL24			5	2	16	16				LINE AMPLIFIER, CH24	J16		1.820.715.00
			5	2	18	15				REPRODUCE AMPLIFIER, CH24	J18		1.820.710.00
CA-LS001			3	1	1	18				LINE AMPLIFIER, CH 1	J01		1.820.715.00
			3	1	2	24A				CONTROLLER INTERNAL NRS CH 1	J02		1.820.815.00
CA-LS002			3	1	6	18				LINE AMPLIFIER, CH 2	J06		1.820.715.00
			3	1	7	24A				CONTROLLER INTERNAL NRS CH 2	J07		1.820.815.00
CA-LS003			3	1	11	18				LINE AMPLIFIER, CH 3	J11		1.820.715.00
			3	1	12	24A				CONTROLLER INTERNAL NRS CH 3	J12		1.820.815.00
CA-LS004			3	1	16	18				LINE AMPLIFIER, CH 4	J16		1.820.715.00
			3	1	17	24A				CONTROLLER INTERNAL NRS CH 4	J17		1.820.815.00
CA-LS005			3	2	1	18				LINE AMPLIFIER, CH 5	J01		1.820.715.00
			3	2	2	24A				CONTROLLER INTERNAL NRS CH 5	J02		1.820.815.00
CA-LS006			3	2	6	18				LINE AMPLIFIER, CH 6	J06		1.820.715.00
			3	2	7	24A				CONTROLLER INTERNAL NRS CH 6	J07		1.820.815.00
CA-LS007			3	2	11	18				LINE AMPLIFIER, CH 7	J11		1.820.715.00
			3	2	12	24A				CONTROLLER INTERNAL NRS CH 7	J12		1.820.815.00
CA-LS008			3	2	16	18				LINE AMPLIFIER, CH 8	J16		1.820.715.00
			3	2	17	24A				CONTROLLER INTERNAL NRS CH 8	J17		1.820.815.00
CA-LS009			4	1	1	18				LINE AMPLIFIER, CH 9	J01		1.820.715.00
			4	1	2	24A				CONTROLLER INTERNAL NRS CH 9	J02		1.820.815.00
CA-LS010			4	1	6	18				LINE AMPLIFIER, CH10	J06		1.820.715.00
			4	1	7	24A				CONTROLLER INTERNAL NRS CH10	J07		1.820.815.00
CA-LS011			4	1	11	18				LINE AMPLIFIER, CH11	J11		1.820.715.00
			4	1	12	24A				CONTROLLER INTERNAL NRS CH11	J12		1.820.815.00
CA-LS012			4	1	16	18				LINE AMPLIFIER, CH12	J16		1.820.715.00
			4	1	17	24A				CONTROLLER INTERNAL NRS CH12	J17		1.820.815.00
CA-LS013			4	2	1	18				LINE AMPLIFIER, CH13	J01		1.820.715.00
			4	2	2	24A				CONTROLLER INTERNAL NRS CH13	J02		1.820.815.00
CA-LS014			4	2	6	18				LINE AMPLIFIER, CH14	J06		1.820.715.00
			4	2	7	24A				CONTROLLER INTERNAL NRS CH14	J07		1.820.815.00

* WILLI STUDER AG * S I G N A L W I R E L I S T * 89/07/20 * 9:25 * P A G E 116 *

* * TAPE TRANSPORT & AUDIO MCH * * 89/04/19 - 00 *

SIGNAL NAME	COLOR	MI	ASY	GRP	ELM	PNT	S	LV	TYPE	DESCRIPTION OF ELEMENT		REMARK	ELEMENT NR.
CA-LSO15			4	2	11	18				LINE AMPLIFIER, CH15	J11		1.820.715.00
			4	2	12	24A				CONTROLLER INTERNAL NRS CH15	J12		1.820.815.00
CA-LSO16			4	2	16	18				LINE AMPLIFIER, CH16	J16		1.820.715.00
			4	2	17	24A				CONTROLLER INTERNAL NRS CH16	J17		1.820.815.00
CA-LSO17			5	1	1	18				LINE AMPLIFIER, CH17	J01		1.820.715.00
			5	1	2	24A				CONTROLLER INTERNAL NRS CH17	J02		1.820.815.00
CA-LSO18			5	1	6	18				LINE AMPLIFIER, CH18	J06		1.820.715.00
			5	1	7	24A				CONTROLLER INTERNAL NRS CH18	J07		1.820.815.00
CA-LSO19			5	1	11	18				LINE AMPLIFIER, CH19	J11		1.820.715.00
			5	1	12	24A				CONTROLLER INTERNAL NRS CH19	J12		1.820.815.00
CA-LSO20			5	1	16	18				LINE AMPLIFIER, CH20	J16		1.820.715.00
			5	1	17	24A				CONTROLLER INTERNAL NRS CH20	J17		1.820.815.00
CA-LSO21			5	2	1	18				LINE AMPLIFIER, CH21	J01		1.820.715.00
			5	2	2	24A				CONTROLLER INTERNAL NRS CH21	J02		1.820.815.00
CA-LSO22			5	2	6	18				LINE AMPLIFIER, CH22	J06		1.820.715.00
			5	2	7	24A				CONTROLLER INTERNAL NRS CH22	J07		1.820.815.00
CA-LSO23			5	2	11	18				LINE AMPLIFIER, CH23	J11		1.820.715.00
			5	2	12	24A				CONTROLLER INTERNAL NRS CH23	J12		1.820.815.00
CA-LSO24			5	2	16	18				LINE AMPLIFIER, CH24	J16		1.820.715.00
			5	2	17	24A				CONTROLLER INTERNAL NRS CH24	J17		1.820.815.00
CA-LSW01			3	1	2	23B				CONTROLLER INTERNAL NRS CH 1	J02		1.820.815.00
			3	1	3	17				REPRODUCE AMPLIFIER, CH 1	J03		1.820.710.00
CA-LSW02			3	1	7	23B				CONTROLLER INTERNAL NRS CH 2	J07		1.820.815.00
			3	1	8	17				REPRODUCE AMPLIFIER, CH 2	J08		1.820.710.00
CA-LSW03			3	1	12	23B				CONTROLLER INTERNAL NRS CH 3	J12		1.820.815.00
			3	1	13	17				REPRODUCE AMPLIFIER, CH 3	J13		1.820.710.00
CA-LSW04			3	1	17	23B				CONTROLLER INTERNAL NRS CH 4	J17		1.820.815.00
			3	1	18	17				REPRODUCE AMPLIFIER, CH 4	J18		1.820.710.00
CA-LSW05			3	2	2	23B				CONTROLLER INTERNAL NRS CH 5	J02		1.820.815.00
			3	2	3	17				REPRODUCE AMPLIFIER, CH 5	J03		1.820.710.00
CA-LSW06			3	2	7	23B				CONTROLLER INTERNAL NRS CH 6	J07		1.820.815.00
			3	2	8	17				REPRODUCE AMPLIFIER, CH 6	J08		1.820.710.00
CA-LSW07			3	2	12	23B				CONTROLLER INTERNAL NRS CH 7	J12		1.820.815.00
			3	2	13	17				REPRODUCE AMPLIFIER, CH 7	J13		1.820.710.00
CA-LSW08			3	2	17	23B				CONTROLLER INTERNAL NRS CH 8	J17		1.820.815.00
			3	2	18	17				REPRODUCE AMPLIFIER, CH 8	J18		1.820.710.00
CA-LSW09			4	1	2	23B				CONTROLLER INTERNAL NRS CH 9	J02		1.820.815.00
			4	1	3	17				REPRODUCE AMPLIFIER, CH 9	J03		1.820.710.00

***

WILLI STUDER AG * S I G N A L W I R E L I S T * 89/07/20 * 9:25 * P A G E 118

* TAPE TRANSPORT & AUDIO MCH * * 89/04/19 - 00

SIGNAL NAME	COLOR	MI	ASY	GRP	ELM	PNT	S	LV	TYPE	DESCRIPTION OF ELEMENT		REMARK	ELEMENT NR.
CA-RSW05			3	2	4	18				RECORD AMPLIFIER, CH 5	J04		1.820.811.00
			3	2	5	18				HF-DRIVER, CH 5	J05		1.820.813.00
CA-RSW06			3	2	9	18				RECORD AMPLIFIER, CH 6	J09		1.820.811.00
			3	2	10	18				HF-DRIVER, CH 6	J10		1.820.813.00
CA-RSW07			3	2	14	18				RECORD AMPLIFIER, CH 7	J14		1.820.811.00
			3	2	15	18				HF-DRIVER, CH 7	J15		1.820.813.00
CA-RSW08			3	2	19	18				RECORD AMPLIFIER, CH 8	J19		1.820.811.00
			3	2	20	18				HF-DRIVER, CH 8	J20		1.820.813.00
CA-RSW09			4	1	4	18				RECORD AMPLIFIER, CH 9	J04		1.820.811.00
			4	1	5	18				HF-DRIVER, CH 9	J05		1.820.813.00
CA-RSW10			4	1	9	18				RECORD AMPLIFIER, CH10	J09		1.820.811.00
			4	1	10	18				HF-DRIVER, CH10	J10		1.820.813.00
CA-RSW11			4	1	14	18				RECORD AMPLIFIER, CH11	J14		1.820.811.00
			4	1	15	18				HF-DRIVER, CH11	J15		1.820.813.00
CA-RSW12			4	1	19	18				RECORD AMPLIFIER, CH12	J19		1.820.811.00
			4	1	20	18				HF-DRIVER, CH12	J20		1.820.813.00
CA-RSW13			4	2	4	18				RECORD AMPLIFIER, CH13	J04		1.820.811.00
			4	2	5	18				HF-DRIVER, CH13	J05		1.820.813.00
CA-RSW14			4	2	9	18				RECORD AMPLIFIER, CH14	J09		1.820.811.00
			4	2	10	18				HF-DRIVER, CH14	J10		1.820.813.00
CA-RSW15			4	2	14	18				RECORD AMPLIFIER, CH15	J14		1.820.811.00
			4	2	15	18				HF-DRIVER, CH15	J15		1.820.813.00
CA-RSW16			4	2	19	18				RECORD AMPLIFIER, CH16	J19		1.820.811.00
			4	2	20	18				HF-DRIVER, CH16	J20		1.820.813.00
CA-RSW17			5	1	4	18				RECORD AMPLIFIER, CH17	J04		1.820.811.00
			5	1	5	18				HF-DRIVER, CH17	J05		1.820.813.00
CA-RSW18			5	1	9	18				RECORD AMPLIFIER, CH18	J09		1.820.811.00
			5	1	10	18				HF-DRIVER, CH18	J10		1.820.813.00
CA-RSW19			5	1	14	18				RECORD AMPLIFIER, CH19	J14		1.820.811.00
			5	1	15	18				HF-DRIVER, CH19	J15		1.820.813.00
CA-RSW20			5	1	19	18				RECORD AMPLIFIER, CH20	J19		1.820.811.00
			5	1	20	18				HF-DRIVER, CH20	J20		1.820.813.00
CA-RSW21			5	2	4	18				RECORD AMPLIFIER, CH21	J04		1.820.811.00
			5	2	5	18				HF-DRIVER, CH21	J05		1.820.813.00
CA-RSW22			5	2	9	18				RECORD AMPLIFIER, CH22	J09		1.820.811.00
			5	2	10	18				HF-DRIVER, CH22	J10		1.820.813.00
CA-RSW23			5	2	14	18				RECORD AMPLIFIER, CH23	J14		1.820.811.00
			5	2	15	18				HF-DRIVER, CH23	J15		1.820.813.00

* WILLI STUDER AG * S I G N A L W I R E L I S T * 89/07/20 * 9:25 * P A G E 119 *
* TAPE TRANSPORT & AUDIO MCH * * 89/04/19 - 00 *

SIGNAL NAME	COLOR	MI	ASY	GRP	ELM	PNT	S	LV	TYPE	DESCRIPTION OF ELEMENT		REMARK	ELEMENT NR.
CA-RSW24			5	2	19	18				RECORD AMPLIFIER, CH24	J19		1.820.811.00
			5	2	20	18				HF-DRIVER, CH24	J20		1.820.813.00
CA-SAF-A			3	1	2	22B				CONTROLLER INTERNAL NRS CH 1	J02		1.820.815.00
			3	1	7	22B				CONTROLLER INTERNAL NRS CH 2	J07		1.820.815.00
			3	1	12	22B				CONTROLLER INTERNAL NRS CH 3	J12		1.820.815.00
			3	1	17	22B				CONTROLLER INTERNAL NRS CH 4	J17		1.820.815.00
			3	1	21	20A				BUS CONVERTER	J21		1.820.717.00
CA-SAF-B			3	2	2	22B				CONTROLLER INTERNAL NRS CH 5	J02		1.820.815.00
			3	2	7	22B				CONTROLLER INTERNAL NRS CH 6	J07		1.820.815.00
			3	2	12	22B				CONTROLLER INTERNAL NRS CH 7	J12		1.820.815.00
			3	2	17	22B				CONTROLLER INTERNAL NRS CH 8	J17		1.820.815.00
			3	2	21	20A				BUS CONVERTER	J21		1.820.717.00
CA-SAF-C			4	1	2	22B				CONTROLLER INTERNAL NRS CH 9	J02		1.820.815.00
			4	1	7	22B				CONTROLLER INTERNAL NRS CH10	J07		1.820.815.00
			4	1	12	22B				CONTROLLER INTERNAL NRS CH11	J12		1.820.815.00
			4	1	17	22B				CONTROLLER INTERNAL NRS CH12	J17		1.820.815.00
			4	1	21	20A				BUS CONVERTER	J21		1.820.717.00
CA-SAF-D			4	2	2	22B				CONTROLLER INTERNAL NRS CH13	J02		1.820.815.00
			4	2	7	22B				CONTROLLER INTERNAL NRS CH14	J07		1.820.815.00
			4	2	12	22B				CONTROLLER INTERNAL NRS CH15	J12		1.820.815.00
			4	2	17	22B				CONTROLLER INTERNAL NRS CH16	J17		1.820.815.00
			4	2	21	20A				BUS CONVERTER	J21		1.820.717.00
CA-SAF-E			5	1	2	22B				CONTROLLER INTERNAL NRS CH17	J02		1.820.815.00
			5	1	7	22B				CONTROLLER INTERNAL NRS CH18	J07		1.820.815.00
			5	1	12	22B				CONTROLLER INTERNAL NRS CH19	J12		1.820.815.00
			5	1	17	22B				CONTROLLER INTERNAL NRS CH20	J17		1.820.815.00
			5	1	21	20A				BUS CONVERTER	J21		1.820.717.00
CA-SAF-F			5	2	2	22B				CONTROLLER INTERNAL NRS CH21	J02		1.820.815.00
			5	2	7	22B				CONTROLLER INTERNAL NRS CH22	J07		1.820.815.00
			5	2	12	22B				CONTROLLER INTERNAL NRS CH23	J12		1.820.815.00
			5	2	17	22B				CONTROLLER INTERNAL NRS CH24	J17		1.820.815.00
			5	2	21	20A				BUS CONVERTER	J21		1.820.717.00
CA-SAF01			3	1	1	26				LINE AMPLIFIER, CH 1	J01		1.820.715.00
			3	1	2	21B				CONTROLLER INTERNAL NRS CH 1	J02		1.820.815.00
			3	1	3	26				REPRODUCE AMPLIFIER, CH 1	J03		1.820.710.00
			3	1	4	26				RECORD AMPLIFIER, CH 1	J04		1.820.811.00
			3	1	5	26				HF-DRIVER, CH 1	J05		1.820.813.00
CA-SAF02			3	1	6	26				LINE AMPLIFIER, CH 2	J06		1.820.715.00
			3	1	7	21B				CONTROLLER INTERNAL NRS CH 2	J07		1.820.815.00
			3	1	8	26				REPRODUCE AMPLIFIER, CH 2	J08		1.820.710.00
			3	1	9	26				RECORD AMPLIFIER, CH 2	J09		1.820.811.00
			3	1	10	26				HF-DRIVER, CH 2	J10		1.820.813.00
CA-SAF03			3	1	11	26				LINE AMPLIFIER, CH 3	J11		1.820.715.00
			3	1	12	21B				CONTROLLER INTERNAL NRS CH 3	J12		1.820.815.00
			3	1	13	26				REPRODUCE AMPLIFIER, CH 3	J13		1.820.710.00
			3	1	14	26				RECORD AMPLIFIER, CH 3	J14		1.820.811.00
			3	1	15	26				HF-DRIVER, CH 3	J15		1.820.813.00

* WILLI STUDER AG * S I G N A L W I R E L I S T * 89/07/20 * 9:25 * P A G E 120 *
* TAPE TRANSPORT & AUDIO MCH * * 89/04/19 - 00 *

SIGNAL NAME	COLOR	MI	ASY	GRP	ELM	PNT	S	LV	TYPE	DESCRIPTION OF ELEMENT		REMARK	ELEMENT NR.
CA-SAF04			3	1	16	26				LINE AMPLIFIER, CH 4	J16		1.820.715.00
			3	1	17	21B				CONTROLLER INTERNAL NRS CH 4	J17		1.820.815.00
			3	1	18	26				REPRODUCE AMPLIFIER, CH 4	J18		1.820.710.00
			3	1	19	26				RECORD AMPLIFIER, CH 4	J19		1.820.811.00
			3	1	20	26				HF-DRIVER, CH 4	J20		1.820.813.00
CA-SAF05			3	2	1	26				LINE AMPLIFIER, CH 5	J01		1.820.715.00
			3	2	2	21B				CONTROLLER INTERNAL NRS CH 5	J02		1.820.815.00
			3	2	3	26				REPRODUCE AMPLIFIER, CH 5	J03		1.820.710.00
			3	2	4	26				RECORD AMPLIFIER, CH 5	J04		1.820.811.00
			3	2	5	26				HF-DRIVER, CH 5	J05		1.820.813.00
CA-SAF06			3	2	6	26				LINE AMPLIFIER, CH 6	J06		1.820.715.00
			3	2	7	21B				CONTROLLER INTERNAL NRS CH 6	J07		1.820.815.00
			3	2	8	26				REPRODUCE AMPLIFIER, CH 6	J08		1.820.710.00
			3	2	9	26				RECORD AMPLIFIER, CH 6	J09		1.820.811.00
			3	2	10	26				HF-DRIVER, CH 6	J10		1.820.813.00
CA-SAF07			3	2	11	26				LINE AMPLIFIER, CH 7	J11		1.820.715.00
			3	2	12	21B				CONTROLLER INTERNAL NRS CH 7	J12		1.820.815.00
			3	2	13	26				REPRODUCE AMPLIFIER, CH 7	J13		1.820.710.00
			3	2	14	26				RECORD AMPLIFIER, CH 7	J14		1.820.811.00
			3	2	15	26				HF-DRIVER, CH 7	J15		1.820.813.00
CA-SAF08			3	2	16	26				LINE AMPLIFIER, CH 8	J16		1.820.715.00
			3	2	17	21B				CONTROLLER INTERNAL NRS CH 8	J17		1.820.815.00
			3	2	18	26				REPRODUCE AMPLIFIER, CH 8	J18		1.820.710.00
			3	2	19	26				RECORD AMPLIFIER, CH 8	J19		1.820.811.00
			3	2	20	26				HF-DRIVER, CH 8	J20		1.820.813.00
CA-SAF09			4	1	1	26				LINE AMPLIFIER, CH 9	J01		1.820.715.00
			4	1	2	21B				CONTROLLER INTERNAL NRS CH 9	J02		1.820.815.00
			4	1	3	26				REPRODUCE AMPLIFIER, CH 9	J03		1.820.710.00
			4	1	4	26				RECORD AMPLIFIER, CH 9	J04		1.820.811.00
			4	1	5	26				HF-DRIVER, CH 9	J05		1.820.813.00
CA-SAF10			4	1	6	26				LINE AMPLIFIER, CH10	J06		1.820.715.00
			4	1	7	21B				CONTROLLER INTERNAL NRS CH10	J07		1.820.815.00
			4	1	8	26				REPRODUCE AMPLIFIER, CH10	J08		1.820.710.00
			4	1	9	26				RECORD AMPLIFIER, CH10	J09		1.820.811.00
			4	1	10	26				HF-DRIVER, CH10	J10		1.820.813.00
CA-SAF11			4	1	11	26				LINE AMPLIFIER, CH11	J11		1.820.715.00
			4	1	12	21B				CONTROLLER INTERNAL NRS CH11	J12		1.820.815.00
			4	1	13	26				REPRODUCE AMPLIFIER, CH11	J13		1.820.710.00
			4	1	14	26				RECORD AMPLIFIER, CH11	J14		1.820.811.00
			4	1	15	26				HF-DRIVER, CH11	J15		1.820.813.00
CA-SAF12			4	1	16	26				LINE AMPLIFIER, CH12	J16		1.820.715.00
			4	1	17	21B				CONTROLLER INTERNAL NRS CH12	J17		1.820.815.00
			4	1	18	26				REPRODUCE AMPLIFIER, CH12	J18		1.820.710.00
			4	1	19	26				RECORD AMPLIFIER, CH12	J19		1.820.811.00
			4	1	20	26				HF-DRIVER, CH12	J20		1.820.813.00

* WILLI STUDER AG * S I G N A L W I R E L I S T * 89/07/20 * 9:25 * P A G E 121 *
* * TAPE TRANSPORT & AUDIO MCH * * 89/04/19 - 00 *

SIGNAL NAME	COLOR	MI	ASY	GRP	ELM	PNT	S	LV	TYPE	DESCRIPTION OF ELEMENT		REMARK	ELEMENT NR.
CA-SAF13			4	2	1	26				LINE AMPLIFIER, CH13	J01		1.820.715.00
			4	2	2	21B				CONTROLLER INTERNAL NRS CH13	J02		1.820.815.00
			4	2	3	26				REPRODUCE AMPLIFIER, CH13	J03		1.820.710.00
			4	2	4	26				RECORD AMPLIFIER, CH13	J04		1.820.811.00
			4	2	5	26				HF-DRIVER, CH13	J05		1.820.813.00
CA-SAF14			4	2	6	26				LINE AMPLIFIER, CH14	J06		1.820.715.00
			4	2	7	21B				CONTROLLER INTERNAL NRS CH14	J07		1.820.815.00
			4	2	8	26				REPRODUCE AMPLIFIER, CH14	J08		1.820.710.00
			4	2	9	26				RECORD AMPLIFIER, CH14	J09		1.820.811.00
			4	2	10	26				HF-DRIVER, CH14	J10		1.820.813.00
CA-SAF15			4	2	11	26				LINE AMPLIFIER, CH15	J11		1.820.715.00
			4	2	12	21B				CONTROLLER INTERNAL NRS CH15	J12		1.820.815.00
			4	2	13	26				REPRODUCE AMPLIFIER, CH15	J13		1.820.710.00
			4	2	14	26				RECORD AMPLIFIER, CH15	J14		1.820.811.00
			4	2	15	26				HF-DRIVER, CH15	J15		1.820.813.00
CA-SAF16			4	2	16	26				LINE AMPLIFIER, CH16	J16		1.820.715.00
			4	2	17	21B				CONTROLLER INTERNAL NRS CH16	J17		1.820.815.00
			4	2	18	26				REPRODUCE AMPLIFIER, CH16	J18		1.820.710.00
			4	2	19	26				RECORD AMPLIFIER, CH16	J19		1.820.811.00
			4	2	20	26				HF-DRIVER, CH16	J20		1.820.813.00
CA-SAF17			5	1	1	26				LINE AMPLIFIER, CH17	J01		1.820.715.00
			5	1	2	21B				CONTROLLER INTERNAL NRS CH17	J02		1.820.815.00
			5	1	3	26				REPRODUCE AMPLIFIER, CH17	J03		1.820.710.00
			5	1	4	26				RECORD AMPLIFIER, CH17	J04		1.820.811.00
			5	1	5	26				HF-DRIVER, CH17	J05		1.820.813.00
CA-SAF18			5	1	6	26				LINE AMPLIFIER, CH18	J06		1.820.715.00
			5	1	7	21B				CONTROLLER INTERNAL NRS CH18	J07		1.820.815.00
			5	1	8	26				REPRODUCE AMPLIFIER, CH18	J08		1.820.710.00
			5	1	9	26				RECORD AMPLIFIER, CH18	J09		1.820.811.00
			5	1	10	26				HF-DRIVER, CH18	J10		1.820.813.00
CA-SAF19			5	1	11	26				LINE AMPLIFIER, CH19	J11		1.820.715.00
			5	1	12	21B				CONTROLLER INTERNAL NRS CH19	J12		1.820.815.00
			5	1	13	26				REPRODUCE AMPLIFIER, CH19	J13		1.820.710.00
			5	1	14	26				RECORD AMPLIFIER, CH19	J14		1.820.811.00
			5	1	15	26				HF-DRIVER, CH19	J15		1.820.813.00
CA-SAF20			5	1	16	26				LINE AMPLIFIER, CH20	J16		1.820.715.00
			5	1	17	21B				CONTROLLER INTERNAL NRS CH20	J17		1.820.815.00
			5	1	18	26				REPRODUCE AMPLIFIER, CH20	J18		1.820.710.00
			5	1	19	26				RECORD AMPLIFIER, CH20	J19		1.820.811.00
			5	1	20	26				HF-DRIVER, CH20	J20		1.820.813.00
CA-SAF21			5	2	1	26				LINE AMPLIFIER, CH21	J01		1.820.715.00
			5	2	2	21B				CONTROLLER INTERNAL NRS CH21	J02		1.820.815.00
			5	2	3	26				REPRODUCE AMPLIFIER, CH21	J03		1.820.710.00
			5	2	4	26				RECORD AMPLIFIER, CH21	J04		1.820.811.00
			5	2	5	26				HF-DRIVER, CH21	J05		1.820.813.00

* WILLI STUDER AG * S I G N A L W I R E L I S T * 89/07/20 * 9:25 * P A G E 122 *
* * TAPE TRANSPORT & AUDIO MCH * * 89/04/19 - 00 *

SIGNAL NAME	COLOR	MI	ASY	GRP	ELM	PNT	S	LV	TYPE	DESCRIPTION OF ELEMENT		REMARK	ELEMENT NR.
CA-SAF22			5	2	6	26				LINE AMPLIFIER, CH22	J06		1.820.715.00
			5	2	7	21B				CONTROLLER INTERNAL NRS CH22	J07		1.820.815.00
			5	2	8	26				REPRODUCE AMPLIFIER, CH22	J08		1.820.710.00
			5	2	9	26				RECORD AMPLIFIER, CH22	J09		1.820.811.00
			5	2	10	26				HF-DRIVER, CH22	J10		1.820.813.00
CA-SAF23			5	2	11	26				LINE AMPLIFIER, CH23	J11		1.820.715.00
			5	2	12	21B				CONTROLLER INTERNAL NRS CH23	J12		1.820.815.00
			5	2	13	26				REPRODUCE AMPLIFIER, CH23	J13		1.820.710.00
			5	2	14	26				RECORD AMPLIFIER, CH23	J14		1.820.811.00
			5	2	15	26				HF-DRIVER, CH23	J15		1.820.813.00
CA-SAF24			5	2	16	26				LINE AMPLIFIER, CH24	J16		1.820.715.00
			5	2	17	21B				CONTROLLER INTERNAL NRS CH24	J17		1.820.815.00
			5	2	18	26				REPRODUCE AMPLIFIER, CH24	J18		1.820.710.00
			5	2	19	26				RECORD AMPLIFIER, CH24	J19		1.820.811.00
			5	2	20	26				HF-DRIVER, CH24	J20		1.820.813.00
CA-SYN01			3	1	1	17				LINE AMPLIFIER, CH 1	J01		1.820.715.00
			3	1	3	16				REPRODUCE AMPLIFIER, CH 1	J03		1.820.710.00
CA-SYN02			3	1	6	17				LINE AMPLIFIER, CH 2	J06		1.820.715.00
			3	1	8	16				REPRODUCE AMPLIFIER, CH 2	J08		1.820.710.00
CA-SYN03			3	1	11	17				LINE AMPLIFIER, CH 3	J11		1.820.715.00
			3	1	13	16				REPRODUCE AMPLIFIER, CH 3	J13		1.820.710.00
CA-SYN04			3	1	16	17				LINE AMPLIFIER, CH 4	J16		1.820.715.00
			3	1	18	16				REPRODUCE AMPLIFIER, CH 4	J18		1.820.710.00
CA-SYN05			3	2	1	17				LINE AMPLIFIER, CH 5	J01		1.820.715.00
			3	2	3	16				REPRODUCE AMPLIFIER, CH 5	J03		1.820.710.00
CA-SYN06			3	2	6	17				LINE AMPLIFIER, CH 6	J06		1.820.715.00
			3	2	8	16				REPRODUCE AMPLIFIER, CH 6	J08		1.820.710.00
CA-SYN07			3	2	11	17				LINE AMPLIFIER, CH 7	J11		1.820.715.00
			3	2	13	16				REPRODUCE AMPLIFIER, CH 7	J13		1.820.710.00
CA-SYN08			3	2	16	17				LINE AMPLIFIER, CH 8	J16		1.820.715.00
			3	2	18	16				REPRODUCE AMPLIFIER, CH 8	J18		1.820.710.00
CA-SYN09			4	1	1	17				LINE AMPLIFIER, CH 9	J01		1.820.715.00
			4	1	3	16				REPRODUCE AMPLIFIER, CH 9	J03		1.820.710.00
CA-SYN10			4	1	6	17				LINE AMPLIFIER, CH10	J06		1.820.715.00
			4	1	8	16				REPRODUCE AMPLIFIER, CH10	J08		1.820.710.00
CA-SYN11			4	1	11	17				LINE AMPLIFIER, CH11	J11		1.820.715.00
			4	1	13	16				REPRODUCE AMPLIFIER, CH11	J13		1.820.710.00
CA-SYN12			4	1	16	17				LINE AMPLIFIER, CH12	J16		1.820.715.00
			4	1	18	16				REPRODUCE AMPLIFIER, CH12	J18		1.820.710.00
CA-SYN13			4	2	1	17				LINE AMPLIFIER, CH13	J01		1.820.715.00
			4	2	3	16				REPRODUCE AMPLIFIER, CH13	J03		1.820.710.00

WILLI STUDER AG * S I G N A L W I R E L I S T * 89/07/20 * 9:25 * P A G E 123

* TAPE TRANSPORT & AUDIO MCH * * 89/04/19 - 00

SIGNAL NAME	COLOR	MI	ASY	GRP	ELM	PNT	S	LV	TYPE	DESCRIPTION OF ELEMENT		REMARK	ELEMENT NR.
CA-SYN14			4	2	6	17				LINE AMPLIFIER, CH14	J06		1.820.715.00
			4	2	8	16				REPRODUCE AMPLIFIER, CH14	J08		1.820.710.00
CA-SYN15			4	2	11	17				LINE AMPLIFIER, CH15	J11		1.820.715.00
			4	2	13	16				REPRODUCE AMPLIFIER, CH15	J13		1.820.710.00
CA-SYN16			4	2	16	17				LINE AMPLIFIER, CH16	J16		1.820.715.00
			4	2	18	16				REPRODUCE AMPLIFIER, CH16	J18		1.820.710.00
CA-SYN17			5	1	1	17				LINE AMPLIFIER, CH17	J01		1.820.715.00
			5	1	3	16				REPRODUCE AMPLIFIER, CH17	J03		1.820.710.00
CA-SYN18			5	1	6	17				LINE AMPLIFIER, CH18	J06		1.820.715.00
			5	1	8	16				REPRODUCE AMPLIFIER, CH18	J08		1.820.710.00
CA-SYN19			5	1	11	17				LINE AMPLIFIER, CH19	J11		1.820.715.00
			5	1	13	16				REPRODUCE AMPLIFIER, CH19	J13		1.820.710.00
CA-SYN20			5	1	16	17				LINE AMPLIFIER, CH20	J16		1.820.715.00
			5	1	18	16				REPRODUCE AMPLIFIER, CH20	J18		1.820.710.00
CA-SYN21			5	2	1	17				LINE AMPLIFIER, CH21	J01		1.820.715.00
			5	2	3	16				REPRODUCE AMPLIFIER, CH21	J03		1.820.710.00
CA-SYN22			5	2	6	17				LINE AMPLIFIER, CH22	J06		1.820.715.00
			5	2	8	16				REPRODUCE AMPLIFIER, CH22	J08		1.820.710.00
CA-SYN23			5	2	11	17				LINE AMPLIFIER, CH23	J11		1.820.715.00
			5	2	13	16				REPRODUCE AMPLIFIER, CH23	J13		1.820.710.00
CA-SYN24			5	2	16	17				LINE AMPLIFIER, CH24	J16		1.820.715.00
			5	2	18	16				REPRODUCE AMPLIFIER, CH24	J18		1.820.710.00
CA-TC-01			3	1	2	10B				CONTROLLER INTERNAL NRS CH 1	J02		1.820.815.00
			3	1	3	9				REPRODUCE AMPLIFIER, CH 1	J03		1.820.710.00
CA-TC-02			3	1	7	10B				CONTROLLER INTERNAL NRS CH 2	J07		1.820.815.00
			3	1	8	9				REPRODUCE AMPLIFIER, CH 2	J08		1.820.710.00
CA-TC-03			3	1	12	10B				CONTROLLER INTERNAL NRS CH 3	J12		1.820.815.00
			3	1	13	9				REPRODUCE AMPLIFIER, CH 3	J13		1.820.710.00
CA-TC-04			3	1	17	10B				CONTROLLER INTERNAL NRS CH 4	J17		1.820.815.00
			3	1	18	9				REPRODUCE AMPLIFIER, CH 4	J18		1.820.710.00
CA-TC-05			3	2	2	10B				CONTROLLER INTERNAL NRS CH 5	J02		1.820.815.00
			3	2	3	9				REPRODUCE AMPLIFIER, CH 5	J03		1.820.710.00
CA-TC-06			3	2	7	10B				CONTROLLER INTERNAL NRS CH 6	J07		1.820.815.00
			3	2	8	9				REPRODUCE AMPLIFIER, CH 6	J08		1.820.710.00
CA-TC-07			3	2	12	10B				CONTROLLER INTERNAL NRS CH 7	J12		1.820.815.00
			3	2	13	9				REPRODUCE AMPLIFIER, CH 7	J13		1.820.710.00
CA-TC-08			3	2	17	10B				CONTROLLER INTERNAL NRS CH 8	J17		1.820.815.00
			3	2	18	9				REPRODUCE AMPLIFIER, CH 8	J18		1.820.710.00

```
*    WILLI STUDER AG    *    S I G N A L     W I R E     L I S T                *  89/07/20  *   9:25  *   P A G E 124    *
*                            * TAPE TRANSPORT & AUDIO MCH *                      *  89/04/19 - 00                        *
```

SIGNAL NAME	COLOR	MI	ASY	GRP	ELM	PNT	S	LV	TYPE	DESCRIPTION OF ELEMENT		REMARK	ELEMENT NR.
CA-TC-09			4	1	2	10B				CONTROLLER INTERNAL NRS CH 9	J02		1.820.815.00
			4	1	3	9				REPRODUCE AMPLIFIER, CH 9	J03		1.820.710.00
CA-TC-10			4	1	7	10B				CONTROLLER INTERNAL NRS CH10	J07		1.820.815.00
			4	1	8	9				REPRODUCE AMPLIFIER, CH10	J08		1.820.710.00
CA-TC-11			4	1	12	10B				CONTROLLER INTERNAL NRS CH11	J12		1.820.815.00
			4	1	13	9				REPRODUCE AMPLIFIER, CH11	J13		1.820.710.00
CA-TC-12			4	1	17	10B				CONTROLLER INTERNAL NRS CH12	J17		1.820.815.00
			4	1	18	9				REPRODUCE AMPLIFIER, CH12	J18		1.820.710.00
CA-TC-13			4	2	2	10B				CONTROLLER INTERNAL NRS CH13	J02		1.820.815.00
			4	2	3	9				REPRODUCE AMPLIFIER, CH13	J03		1.820.710.00
CA-TC-14			4	2	7	10B				CONTROLLER INTERNAL NRS CH14	J07		1.820.815.00
			4	2	8	9				REPRODUCE AMPLIFIER, CH14	J08		1.820.710.00
CA-TC-15			4	2	12	10B				CONTROLLER INTERNAL NRS CH15	J12		1.820.815.00
			4	2	13	9				REPRODUCE AMPLIFIER, CH15	J13		1.820.710.00
CA-TC-16			4	2	17	10B				CONTROLLER INTERNAL NRS CH16	J17		1.820.815.00
			4	2	18	9				REPRODUCE AMPLIFIER, CH16	J18		1.820.710.00
CA-TC-17			5	1	2	10B				CONTROLLER INTERNAL NRS CH17	J02		1.820.815.00
			5	1	3	9				REPRODUCE AMPLIFIER, CH17	J03		1.820.710.00
CA-TC-18			5	1	7	10B				CONTROLLER INTERNAL NRS CH18	J07		1.820.815.00
			5	1	8	9				REPRODUCE AMPLIFIER, CH18	J08		1.820.710.00
CA-TC-19			5	1	12	10B				CONTROLLER INTERNAL NRS CH19	J12		1.820.815.00
			5	1	13	9				REPRODUCE AMPLIFIER, CH19	J13		1.820.710.00
CA-TC-20			5	1	17	10B				CONTROLLER INTERNAL NRS CH20	J17		1.820.815.00
			5	1	18	9				REPRODUCE AMPLIFIER, CH20	J18		1.820.710.00
CA-TC-21			5	2	2	10B				CONTROLLER INTERNAL NRS CH21	J02		1.820.815.00
			5	2	3	9				REPRODUCE AMPLIFIER, CH21	J03		1.820.710.00
CA-TC-22			5	2	7	10B				CONTROLLER INTERNAL NRS CH22	J07		1.820.815.00
			5	2	8	9				REPRODUCE AMPLIFIER, CH22	J08		1.820.710.00
CA-TC-23			5	2	12	10B				CONTROLLER INTERNAL NRS CH23	J12		1.820.815.00
			5	2	13	9				REPRODUCE AMPLIFIER, CH23	J13		1.820.710.00
CA-TC-24			5	2	17	10B				CONTROLLER INTERNAL NRS CH24	J17		1.820.815.00
			5	2	18	9				REPRODUCE AMPLIFIER, CH24	J18		1.820.710.00
CD-ACT01			3	1	2	7A				CONTROLLER INTERNAL NRS CH 1	J02		1.820.815.00
			3	1	32	4				NOISE REDUCTION, CH 1	J23		
			3	4	1	16T				NOISE REDUCTION UNIT CH 1	J11		
	9		3	4	11	4			D	TO GRP01, ELM32 (AUDIO BASIS B.)	P11		
CD-ACT02			3	1	7	7A				CONTROLLER INTERNAL NRS CH 2	J07		1.820.815.00
			3	1	37	4				NOISE REDUCTION, CH 2	J28		
	9		3	4	21	4			D	TO GRP01, ELM37 (AUDIO BASIS B.)	P21		

* WILLI STUDER AG * S I G N A L W I R E L I S T * 89/07/20 * 9:25 * P A G E 125 *
* * TAPE TRANSPORT & AUDIO MCH * * 89/04/19 - 00 *

SIGNAL NAME	COLOR	MI	ASY	GRP	ELM	PNT	S	LV	TYPE	DESCRIPTION OF ELEMENT		REMARK	ELEMENT NR.
CD-ACT03			3	1	12	7A				CONTROLLER INTERNAL NRS CH 3	J12		1.820.815.00
			3	1	42	4				NOISE REDUCTION, CH 3	J33		
	9		3	4	31	4			D	TO GRP01, ELM42 (AUDIO BASIS B.)	P31		
CD-ACT04			3	1	17	7A				CONTROLLER INTERNAL NRS CH 4	J17		1.820.815.00
			3	1	47	4				NOISE REDUCTION, CH 4	J38		
	9		3	4	41	4			D	TO GRP01, ELM47 (AUDIO BASIS B.)	P41		
CD-ACT05			3	2	2	7A				CONTROLLER INTERNAL NRS CH 5	J02		1.820.815.00
			3	2	32	4				NOISE REDUCTION, CH 5	J23		
	9		3	4	51	4			D	TO GRP02, ELM32 (AUDIO BASIS B.)	P51		
CD-ACT06			3	2	7	7A				CONTROLLER INTERNAL NRS CH 6	J07		1.820.815.00
			3	2	37	4				NOISE REDUCTION, CH 6	J28		
	9		3	4	61	4			D	TO GRP02, ELM37 (AUDIO BASIS B.)	P61		
CD-ACT07			3	2	12	7A				CONTROLLER INTERNAL NRS CH 7	J12		1.820.815.00
			3	2	42	4				NOISE REDUCTION, CH 7	J33		
	9		3	4	71	4			D	TO GRP02, ELM42 (AUDIO BASIS B.)	P71		
CD-ACT08			3	2	17	7A				CONTROLLER INTERNAL NRS CH 8	J17		1.820.815.00
			3	2	47	4				NOISE REDUCTION, CH 8	J38		
	9		3	4	81	4			D	TO GRP02, ELM47 (AUDIO BASIS B.)	P81		
CD-ACT09			4	1	2	7A				CONTROLLER INTERNAL NRS CH 9	J02		1.820.815.00
			4	1	32	4				NOISE REDUCTION, CH 9	J23		
			4	4	1	12				NOISE REDUCTION UNIT CH 9	J01		
			4	4	11	4			D	TO GRP01, ELM32 (AUDIO BASIS B.)	P01		
CD-ACT10			4	1	7	7A				CONTROLLER INTERNAL NRS CH10	J07		1.820.815.00
			4	1	37	4				NOISE REDUCTION, CH10	J28		
			4	4	12	4			D	TO GRP01, ELM37 (AUDIO BASIS B.)	P02		
CD-ACT11			4	1	12	7A				CONTROLLER INTERNAL NRS CH11	J12		1.820.815.00
			4	1	42	4				NOISE REDUCTION, CH11	J33		
			4	4	13	4			D	TO GRP01, ELM42 (AUDIO BASIS B.)	P03		
CD-ACT12			4	1	17	7A				CONTROLLER INTERNAL NRS CH12	J17		1.820.815.00
			4	1	47	4				NOISE REDUCTION, CH12	J38		
			4	4	14	4			D	TO GRP01, ELM47 (AUDIO BASIS B.)	P04		
CD-ACT13			4	2	2	7A				CONTROLLER INTERNAL NRS CH13	J02		1.820.815.00
			4	2	32	4				NOISE REDUCTION, CH13	J23		
			4	4	15	4			D	TO GRP02, ELM32 (AUDIO BASIS B.)	P05		
CD-ACT14			4	2	7	7A				CONTROLLER INTERNAL NRS CH14	J07		1.820.815.00
			4	2	37	4				NOISE REDUCTION, CH14	J28		
			4	4	16	4			D	TO GRP02, ELM37 (AUDIO BASIS B.)	P06		
CD-ACT15			4	2	12	7A				CONTROLLER INTERNAL NRS CH15	J12		1.820.815.00
			4	2	42	4				NOISE REDUCTION, CH15	J33		
			4	4	17	4			D	TO GRP02, ELM42 (AUDIO BASIS B.)	P07		
CD-ACT16			4	2	17	7A				CONTROLLER INTERNAL NRS CH16	J17		1.820.815.00
			4	2	47	4				NOISE REDUCTION, CH16	J38		
			4	4	18	4			D	TO GRP02, ELM47 (AUDIO BASIS B.)	P08		

* WILLI STUDER AG * S I G N A L W I R E L I S T * 89/07/20 * 9:25 * P A G E 126 *
* * TAPE TRANSPORT & AUDIO MCH * * 89/04/19 - 00 *

SIGNAL NAME	COLOR	MI	ASY	GRP	ELM	PNT	S	LV	TYPE	DESCRIPTION OF ELEMENT		REMARK	ELEMENT NR.
CD-ACT17			5	1	2	7A				CONTROLLER INTERNAL NRS CH17	J02		1.820.815.00
			5	1	32	4				NOISE REDUCTION, CH17	J23		
			5	4	1	12				NOISE REDUCTION UNIT CH17	J01		
			5	4	11	4			D	TO GRP01, ELM32 (AUDIO BASIS B.)	P01		
CD-ACT18			5	1	7	7A				CONTROLLER INTERNAL NRS CH18	J07		1.820.815.00
			5	1	37	4				NOISE REDUCTION, CH18	J28		
			5	4	12	4			D	TO GRP01, ELM37 (AUDIO BASIS B.)	P02		
CD-ACT19			5	1	12	7A				CONTROLLER INTERNAL NRS CH19	J12		1.820.815.00
			5	1	42	4				NOISE REDUCTION, CH19	J33		
			5	4	13	4			D	TO GRP01, ELM42 (AUDIO BASIS B.)	P03		
CD-ACT20			5	1	17	7A				CONTROLLER INTERNAL NRS CH20	J17		1.820.815.00
			5	1	47	4				NOISE REDUCTION, CH20	J38		
			5	4	14	4			D	TO GRP01, ELM47 (AUDIO BASIS B.)	P04		
CD-ACT21			5	2	2	7A				CONTROLLER INTERNAL NRS CH21	J02		1.820.815.00
			5	2	32	4				NOISE REDUCTION, CH21	J23		
			5	4	15	4			D	TO GRP02, ELM32 (AUDIO BASIS B.)	P05		
CD-ACT22			5	2	7	7A				CONTROLLER INTERNAL NRS CH22	J07		1.820.815.00
			5	2	37	4				NOISE REDUCTION, CH22	J28		
			5	4	16	4			D	TO GRP02, ELM37 (AUDIO BASIS B.)	P06		
CD-ACT23			5	2	12	7A				CONTROLLER INTERNAL NRS CH23	J12		1.820.815.00
			5	2	42	4				NOISE REDUCTION, CH23	J33		
			5	4	17	4			D	TO GRP02, ELM42 (AUDIO BASIS B.)	P07		
CD-ACT24			5	2	17	7A				CONTROLLER INTERNAL NRS CH24	J17		1.820.815.00
			5	2	47	4				NOISE REDUCTION, CH24	J38		
			5	4	18	4			D	TO GRP02, ELM47 (AUDIO BASIS B.)	P08		
CD-CAL01			3	1	2	8B				CONTROLLER INTERNAL NRS CH 1	J02		1.820.815.00
			3	1	32	1				NOISE REDUCTION, CH 1	J23		
			3	4	1	3				NOISE REDUCTION UNIT CH 1	J11		
	1		3	4	11	1			D	TO GRP01, ELM32 (AUDIO BASIS B.)	P11		
CD-CAL02			3	1	7	8B				CONTROLLER INTERNAL NRS CH 2	J07		1.820.815.00
			3	1	37	1				NOISE REDUCTION, CH 2	J28		
	1		3	4	21	1			D	TO GRP01, ELM37 (AUDIO BASIS B.)	P21		
CD-CAL03			3	1	12	8B				CONTROLLER INTERNAL NRS CH 3	J12		1.820.815.00
			3	1	42	1				NOISE REDUCTION, CH 3	J33		
	1		3	4	31	1			D	TO GRP01, ELM42 (AUDIO BASIS B.)	P31		
CD-CAL04			3	1	17	8B				CONTROLLER INTERNAL NRS CH 4	J17		1.820.815.00
			3	1	47	1				NOISE REDUCTION, CH 4	J38		
	1		3	4	41	1			D	TO GRP01, ELM47 (AUDIO BASIS B.)	P41		
CD-CAL05			3	2	2	8B				CONTROLLER INTERNAL NRS CH 5	J02		1.820.815.00
			3	2	32	1				NOISE REDUCTION, CH 5	J23		
	1		3	4	51	1			D	TO GRP02, ELM32 (AUDIO BASIS B.)	P51		

SIGNAL NAME	COLOR	MI	ASY	GRP	ELM	PNT	S	LV	TYPE	DESCRIPTION OF ELEMENT		REMARK	ELEMENT NR.
CD-CAL06			3	2	7	8B				CONTROLLER INTERNAL NRS CH 6	J07		1.820.815.00
			3	2	37	1				NOISE REDUCTION, CH 6	J28		
	1		3	4	61	1			D	TO GRP02, ELM37 (AUDIO BASIS B.)	P61		
CD-CAL07			3	2	12	8B				CONTROLLER INTERNAL NRS CH 7	J12		1.820.815.00
			3	2	42	1				NOISE REDUCTION, CH 7	J33		
	1		3	4	71	1			D	TO GRP02, ELM42 (AUDIO BASIS B.)	P71		
CD-CAL08			3	2	17	8B				CONTROLLER INTERNAL NRS CH 8	J17		1.820.815.00
			3	2	47	1				NOISE REDUCTION, CH 8	J38		
	1		3	4	81	1			D	TO GRP02, ELM47 (AUDIO BASIS B.)	P81		
CD-CAL09			4	1	2	8B				CONTROLLER INTERNAL NRS CH 9	J02		1.820.815.00
			4	1	32	1				NOISE REDUCTION, CH 9	J23		
			4	4	1	3				NOISE REDUCTION UNIT CH 9	J01		
			4	4	11	1			D	TO GRP01, ELM32 (AUDIO BASIS B.)	P01		
CD-CAL10			4	1	7	8B				CONTROLLER INTERNAL NRS CH10	J07		1.820.815.00
			4	1	37	1				NOISE REDUCTION, CH10	J28		
			4	4	12	1			D	TO GRP01, ELM37 (AUDIO BASIS B.)	P02		
CD-CAL11			4	1	12	8B				CONTROLLER INTERNAL NRS CH11	J12		1.820.815.00
			4	1	42	1				NOISE REDUCTION, CH11	J33		
			4	4	13	1			D	TO GRP01, ELM42 (AUDIO BASIS B.)	P03		
CD-CAL12			4	1	17	8B				CONTROLLER INTERNAL NRS CH12	J17		1.820.815.00
			4	1	47	1				NOISE REDUCTION, CH12	J38		
			4	4	14	1			D	TO GRP01, ELM47 (AUDIO BASIS B.)	P04		
CD-CAL13			4	2	2	8B				CONTROLLER INTERNAL NRS CH13	J02		1.820.815.00
			4	2	32	1				NOISE REDUCTION, CH13	J23		
			4	4	15	1			D	TO GRP02, ELM32 (AUDIO BASIS B.)	P05		
CD-CAL14			4	2	7	8B				CONTROLLER INTERNAL NRS CH14	J07		1.820.815.00
			4	2	37	1				NOISE REDUCTION, CH14	J28		
			4	4	16	1			D	TO GRP02, ELM37 (AUDIO BASIS B.)	P06		
CD-CAL15			4	2	12	8B				CONTROLLER INTERNAL NRS CH15	J12		1.820.815.00
			4	2	42	1				NOISE REDUCTION, CH15	J33		
			4	4	17	1			D	TO GRP02, ELM42 (AUDIO BASIS B.)	P07		
CD-CAL16			4	2	17	8B				CONTROLLER INTERNAL NRS CH16	J17		1.820.815.00
			4	2	47	1				NOISE REDUCTION, CH16	J38		
			4	4	18	1			D	TO GRP02, ELM47 (AUDIO BASIS B.)	P08		
CD-CAL17			5	1	2	8B				CONTROLLER INTERNAL NRS CH17	J02		1.820.815.00
			5	1	32	1				NOISE REDUCTION, CH17	J23		
			5	4	1	3				NOISE REDUCTION UNIT CH17	J01		
			5	4	11	1			D	TO GRP01, ELM32 (AUDIO BASIS B.)	P01		
CD-CAL18			5	1	7	8B				CONTROLLER INTERNAL NRS CH18	J07		1.820.815.00
			5	1	37	1				NOISE REDUCTION, CH18	J28		
			5	4	12	1			D	TO GRP01, ELM37 (AUDIO BASIS B.)	P02		

SIGNAL NAME	COLOR	MI	ASY	GRP	ELM	PNT	S	LV	TYPE	DESCRIPTION OF ELEMENT		REMARK	ELEMENT NR.
CD-CAL19			5	1	12	8B				CONTROLLER INTERNAL NRS CH19	J12		1.820.815.00
			5	1	42	1				NOISE REDUCTION, CH19	J33		
			5	4	13	1			D	TO GRP01, ELM42 (AUDIO BASIS B.)	P03		
CD-CAL20			5	1	17	8B				CONTROLLER INTERNAL NRS CH20	J17		1.820.815.00
			5	1	47	1				NOISE REDUCTION, CH20	J38		
			5	4	14	1			D	TO GRP01, ELM47 (AUDIO BASIS B.)	P04		
CD-CAL21			5	2	2	8B				CONTROLLER INTERNAL NRS CH21	J02		1.820.815.00
			5	2	32	1				NOISE REDUCTION, CH21	J23		
			5	4	15	1			D	TO GRP02, ELM32 (AUDIO BASIS B.)	P05		
CD-CAL22			5	2	7	8B				CONTROLLER INTERNAL NRS CH22	J07		1.820.815.00
			5	2	37	1				NOISE REDUCTION, CH22	J28		
			5	4	16	1			D	TO GRP02, ELM37 (AUDIO BASIS B.)	P06		
CD-CAL23			5	2	12	8B				CONTROLLER INTERNAL NRS CH23	J12		1.820.815.00
			5	2	42	1				NOISE REDUCTION, CH23	J33		
			5	4	17	1			D	TO GRP02, ELM42 (AUDIO BASIS B.)	P07		
CD-CAL24			5	2	17	8B				CONTROLLER INTERNAL NRS CH24	J17		1.820.815.00
			5	2	47	1				NOISE REDUCTION, CH24	J38		
			5	4	18	1			D	TO GRP02, ELM47 (AUDIO BASIS B.)	P08		
CD-REC01			3	1	2	8A				CONTROLLER INTERNAL NRS CH 1	J02		1.820.815.00
			3	1	32	2				NOISE REDUCTION, CH 1	J23		
	8		3	4	11	2			D	TO GRP01, ELM32 (AUDIO BASIS B.)	P11		
CD-REC02			3	1	7	8A				CONTROLLER INTERNAL NRS CH 2	J07		1.820.815.00
			3	1	37	2				NOISE REDUCTION, CH 2	J28		
	8		3	4	21	2			D	TO GRP01, ELM37 (AUDIO BASIS B.)	P21		
CD-REC03			3	1	12	8A				CONTROLLER INTERNAL NRS CH 3	J12		1.820.815.00
			3	1	42	2				NOISE REDUCTION, CH 3	J33		
	8		3	4	31	2			D	TO GRP01, ELM42 (AUDIO BASIS B.)	P31		
CD-REC04			3	1	17	8A				CONTROLLER INTERNAL NRS CH 4	J17		1.820.815.00
			3	1	47	2				NOISE REDUCTION, CH 4	J38		
	8		3	4	41	2			D	TO GRP01, ELM47 (AUDIO BASIS B.)	P41		
CD-REC05			3	2	2	8A				CONTROLLER INTERNAL NRS CH 5	J02		1.820.815.00
			3	2	32	2				NOISE REDUCTION, CH 5	J23		
	8		3	4	51	2			D	TO GRP02, ELM32 (AUDIO BASIS B.)	P51		
CD-REC06			3	2	7	8A				CONTROLLER INTERNAL NRS CH 6	J07		1.820.815.00
			3	2	37	2				NOISE REDUCTION, CH 6	J28		
	8		3	4	61	2			D	TO GRP02, ELM37 (AUDIO BASIS B.)	P61		
CD-REC07			3	2	12	8A				CONTROLLER INTERNAL NRS CH 7	J12		1.820.815.00
			3	2	42	2				NOISE REDUCTION, CH 7	J33		
	8		3	4	71	2			D	TO GRP02, ELM42 (AUDIO BASIS B.)	P71		
CD-REC08			3	2	17	8A				CONTROLLER INTERNAL NRS CH 8	J17		1.820.815.00
			3	2	47	2				NOISE REDUCTION, CH 8	J38		
	8		3	4	81	2			D	TO GRP02, ELM47 (AUDIO BASIS B.)	P81		

* WILLI STUDER AG * S I G N A L W I R E L I S T * 89/07/20 * 9:25 * P A G E 129 *

* * TAPE TRANSPORT & AUDIO MCH * * 89/04/19 - 00 *

SIGNAL NAME	COLOR	MI	ASY	GRP	ELM	PNT	S	LV	TYPE	DESCRIPTION OF ELEMENT	REMARK	ELEMENT NR.
CD-REC09			4	1	2	8A				CONTROLLER INTERNAL NRS CH 9 J02		1.820.815.00
			4	1	32	2				NOISE REDUCTION, CH 9 J23		
			4	4	11	2			D	TO GRP01, ELM32 (AUDIO BASIS B.) P01		
CD-REC10			4	1	7	8A				CONTROLLER INTERNAL NRS CH10 J07		1.820.815.00
			4	1	37	2				NOISE REDUCTION, CH10 J28		
			4	4	12	2			D	TO GRP01, ELM37 (AUDIO BASIS B.) P02		
CD-REC11			4	1	12	8A				CONTROLLER INTERNAL NRS CH11 J12		1.820.815.00
			4	1	42	2				NOISE REDUCTION, CH11 J33		
			4	4	13	2			D	TO GRP01, ELM42 (AUDIO BASIS B.) P03		
CD-REC12			4	1	17	8A				CONTROLLER INTERNAL NRS CH12 J17		1.820.815.00
			4	1	47	2				NOISE REDUCTION, CH12 J38		
			4	4	14	2			D	TO GRP01, ELM47 (AUDIO BASIS B.) P04		
CD-REC13			4	2	2	8A				CONTROLLER INTERNAL NRS CH13 J02		1.820.815.00
			4	2	32	2				NOISE REDUCTION, CH13 J23		
			4	4	15	2			D	TO GRP02, ELM32 (AUDIO BASIS B.) P05		
CD-REC14			4	2	7	8A				CONTROLLER INTERNAL NRS CH14 J07		1.820.815.00
			4	2	37	2				NOISE REDUCTION, CH14 J28		
			4	4	16	2			D	TO GRP02, ELM37 (AUDIO BASIS B.) P06		
CD-REC15			4	2	12	8A				CONTROLLER INTERNAL NRS CH15 J12		1.820.815.00
			4	2	42	2				NOISE REDUCTION, CH15 J33		
			4	4	17	2			D	TO GRP02, ELM42 (AUDIO BASIS B.) P07		
CD-REC16			4	2	17	8A				CONTROLLER INTERNAL NRS CH16 J17		1.820.815.00
			4	2	47	2				NOISE REDUCTION, CH16 J38		
			4	4	18	2			D	TO GRP02, ELM47 (AUDIO BASIS B.) P08		
CD-REC17			5	1	2	8A				CONTROLLER INTERNAL NRS CH17 J02		1.820.815.00
			5	1	32	2				NOISE REDUCTION, CH17 J23		
			5	4	11	2			D	TO GRP01, ELM32 (AUDIO BASIS B.) P01		
CD-REC18			5	1	7	8A				CONTROLLER INTERNAL NRS CH18 J07		1.820.815.00
			5	1	37	2				NOISE REDUCTION, CH18 J28		
			5	4	12	2			D	TO GRP01, ELM37 (AUDIO BASIS B.) P02		
CD-REC19			5	1	12	8A				CONTROLLER INTERNAL NRS CH19 J12		1.820.815.00
			5	1	42	2				NOISE REDUCTION, CH19 J33		
			5	4	13	2			D	TO GRP01, ELM42 (AUDIO BASIS B.) P03		
CD-REC20			5	1	17	8A				CONTROLLER INTERNAL NRS CH20 J17		1.820.815.00
			5	1	47	2				NOISE REDUCTION, CH20 J38		
			5	4	14	2			D	TO GRP01, ELM47 (AUDIO BASIS B.) P04		
CD-REC21			5	2	2	8A				CONTROLLER INTERNAL NRS CH21 J02		1.820.815.00
			5	2	32	2				NOISE REDUCTION, CH21 J23		
			5	4	15	2			D	TO GRP02, ELM32 (AUDIO BASIS B.) P05		
CD-REC22			5	2	7	8A				CONTROLLER INTERNAL NRS CH22 J07		1.820.815.00
			5	2	37	2				NOISE REDUCTION, CH22 J28		
			5	4	16	2			D	TO GRP02, ELM37 (AUDIO BASIS B.) P06		

* WILLI STUDER AG * S I G N A L W I R E L I S T * 89/07/20 * 9:25 * P A G E 130 *

* * TAPE TRANSPORT & AUDIO MCH * * 89/04/19 - 00 *

SIGNAL NAME	COLOR	MI	ASY	GRP	ELM	PNT	S	LV	TYPE	DESCRIPTION OF ELEMENT	REMARK	ELEMENT NR.
CD-REC23			5	2	12	8A				CONTROLLER INTERNAL NRS CH23 J12		1.820.815.00
			5	2	42	2				NOISE REDUCTION, CH23 J33		
			5	4	17	2			D	TO GRP02, ELM42 (AUDIO BASIS B.) P07		
CD-REC24			5	2	17	8A				CONTROLLER INTERNAL NRS CH24 J17		1.820.815.00
			5	2	47	2				NOISE REDUCTION, CH24 J38		
			5	4	18	2			D	TO GRP02, ELM47 (AUDIO BASIS B.) P08		
CD-REP01			3	1	2	7B				CONTROLLER INTERNAL NRS CH 1 J02		1.820.815.00
			3	1	32	3				NOISE REDUCTION, CH 1 J23		
	5		3	4	11	3			D	TO GRP01, ELM32 (AUDIO BASIS B.) P11		
CD-REP02			3	1	7	7B				CONTROLLER INTERNAL NRS CH 2 J07		1.820.815.00
			3	1	37	3				NOISE REDUCTION, CH 2 J28		
	5		3	4	21	3			D	TO GRP01, ELM37 (AUDIO BASIS B.) P21		
CD-REP03			3	1	12	7B				CONTROLLER INTERNAL NRS CH 3 J12		1.820.815.00
			3	1	42	3				NOISE REDUCTION, CH 3 J33		
	5		3	4	31	3			D	TO GRP01, ELM42 (AUDIO BASIS B.) P31		
CD-REP04			3	1	17	7B				CONTROLLER INTERNAL NRS CH 4 J17		1.820.815.00
			3	1	47	3				NOISE REDUCTION, CH 4 J38		
	5		3	4	41	3			D	TO GRP01, ELM47 (AUDIO BASIS B.) P41		
CD-REP05			3	2	2	7B				CONTROLLER INTERNAL NRS CH 5 J02		1.820.815.00
			3	2	32	3				NOISE REDUCTION, CH 5 J23		
	5		3	4	51	3			D	TO GRP02, ELM32 (AUDIO BASIS B.) P51		
CD-REP06			3	2	7	7B				CONTROLLER INTERNAL NRS CH 6 J07		1.820.815.00
			3	2	37	3				NOISE REDUCTION, CH 6 J28		
	5		3	4	61	3			D	TO GRP02, ELM37 (AUDIO BASIS B.) P61		
CD-REP07			3	2	12	7B				CONTROLLER INTERNAL NRS CH 7 J12		1.820.815.00
			3	2	42	3				NOISE REDUCTION, CH 7 J33		
	5		3	4	71	3			D	TO GRP02, ELM42 (AUDIO BASIS B.) P71		
CD-REP08			3	2	17	7B				CONTROLLER INTERNAL NRS CH 8 J17		1.820.815.00
			3	2	47	3				NOISE REDUCTION, CH 8 J38		
	5		3	4	81	3			D	TO GRP02, ELM47 (AUDIO BASIS B.) P81		
CD-REP09			4	1	2	7B				CONTROLLER INTERNAL NRS CH 9 J02		1.820.815.00
			4	1	32	3				NOISE REDUCTION, CH 9 J23		
			4	4	11	3			D	TO GRP01, ELM32 (AUDIO BASIS B.) P01		
CD-REP10			4	1	7	7B				CONTROLLER INTERNAL NRS CH10 J07		1.820.815.00
			4	1	37	3				NOISE REDUCTION, CH10 J28		
			4	4	12	3			D	TO GRP01, ELM37 (AUDIO BASIS B.) P02		
CD-REP11			4	1	12	7B				CONTROLLER INTERNAL NRS CH11 J12		1.820.815.00
			4	1	42	3				NOISE REDUCTION, CH11 J33		
			4	4	13	3			D	TO GRP01, ELM42 (AUDIO BASIS B.) P03		
CD-REP12			4	1	17	7B				CONTROLLER INTERNAL NRS CH12 J17		1.820.815.00
			4	1	47	3				NOISE REDUCTION, CH12 J38		
			4	4	14	3			D	TO GRP01, ELM47 (AUDIO BASIS B.) P04		

* WILLI STUDER AG * S I G N A L W I R E L I S T * 89/07/20 * 9:25 * P A G E 131 *
* * TAPE TRANSPORT & AUDIO MCH * * 89/04/19 - 00 *

SIGNAL NAME	COLOR	MI	ASY	GRP	ELM	PNT	S	LV	TYPE	DESCRIPTION OF ELEMENT		REMARK	ELEMENT NR.
CD-REP13			4	2	2	7B				CONTROLLER INTERNAL NRS CH13	J02		1.820.815.00
			4	2	32	3				NOISE REDUCTION, CH13	J23		
			4	4	15	3			D	TO GRP02, ELM32 (AUDIO BASIS B.)	P05		
CD-REP14			4	2	7	7B				CONTROLLER INTERNAL NRS CH14	J07		1.820.815.00
			4	2	37	3				NOISE REDUCTION, CH14	J28		
			4	4	16	3			D	TO GRP02, ELM37 (AUDIO BASIS B.)	P06		
CD-REP15			4	2	12	7B				CONTROLLER INTERNAL NRS CH15	J12		1.820.815.00
			4	2	42	3				NOISE REDUCTION, CH15	J33		
			4	4	17	3			D	TO GRP02, ELM42 (AUDIO BASIS B.)	P07		
CD-REP16			4	2	17	7B				CONTROLLER INTERNAL NRS CH16	J17		1.820.815.00
			4	2	47	3				NOISE REDUCTION, CH16	J38		
			4	4	18	3			D	TO GRP02, ELM47 (AUDIO BASIS B.)	P08		
CD-REP17			5	1	2	7B				CONTROLLER INTERNAL NRS CH17	J02		1.820.815.00
			5	1	32	3				NOISE REDUCTION, CH17	J23		
			5	4	11	3			D	TO GRP01, ELM32 (AUDIO BASIS B.)	P01		
CD-REP18			5	1	7	7B				CONTROLLER INTERNAL NRS CH18	J07		1.820.815.00
			5	1	37	3				NOISE REDUCTION, CH18	J28		
			5	4	12	3			D	TO GRP01, ELM37 (AUDIO BASIS B.)	P02		
CD-REP19			5	1	12	7B				CONTROLLER INTERNAL NRS CH19	J12		1.820.815.00
			5	1	42	3				NOISE REDUCTION, CH19	J33		
			5	4	13	3			D	TO GRP01, ELM42 (AUDIO BASIS B.)	P03		
CD-REP20			5	1	17	7B				CONTROLLER INTERNAL NRS CH20	J17		1.820.815.00
			5	1	47	3				NOISE REDUCTION, CH20	J38		
			5	4	14	3			D	TO GRP01, ELM47 (AUDIO BASIS B.)	P04		
CD-REP21			5	2	2	7B				CONTROLLER INTERNAL NRS CH21	J02		1.820.815.00
			5	2	32	3				NOISE REDUCTION, CH21	J23		
			5	4	15	3			D	TO GRP02, ELM32 (AUDIO BASIS B.)	P05		
CD-REP22			5	2	7	7B				CONTROLLER INTERNAL NRS CH22	J07		1.820.815.00
			5	2	37	3				NOISE REDUCTION, CH22	J28		
			5	4	16	3			D	TO GRP02, ELM37 (AUDIO BASIS B.)	P06		
CD-REP23			5	2	12	7B				CONTROLLER INTERNAL NRS CH23	J12		1.820.815.00
			5	2	42	3				NOISE REDUCTION, CH23	J33		
			5	4	17	3			D	TO GRP02, ELM42 (AUDIO BASIS B.)	P07		
CD-REP24			5	2	17	7B				CONTROLLER INTERNAL NRS CH24	J17		1.820.815.00
			5	2	47	3				NOISE REDUCTION, CH24	J38		
			5	4	18	3			D	TO GRP02, ELM47 (AUDIO BASIS B.)	P08		
CD-SETUP			1	22	17	3					P14		
			1	22	18	3					P15		
			1	22	19	3					P16		
			1	22	22	6				GENERATOR UNIT MCH	J07		1.820.725.00
CPHASE-R	2		1	38	1	1			F	FROM GRP39, ELM02	J01		
	2		1	38	4	1			L	STATOR (WIRE FIELD)			
			1	39	2	1			M	TO GRP38, ELM01 (CAPSTAN MOTOR)	P02		

* WILLI STUDER AG * S I G N A L W I R E L I S T * 89/07/20 * 9:25 * P A G E 132 *
* * TAPE TRANSPORT & AUDIO MCH * * 89/04/19 - 00 *

SIGNAL NAME	COLOR	MI	ASY	GRP	ELM	PNT	S	LV	TYPE	DESCRIPTION OF ELEMENT		REMARK	ELEMENT NR.
CPHASE-S	0		1	38	1	3			F	FROM GRP39, ELM02	J01		
	0		1	38	4	2			L	STATOR (WIRE FIELD)			
			1	39	2	3			M	TO GRP38, ELM01 (CAPSTAN MOTOR)	P02		
CPHASE-T	9		1	38	1	2			F	FROM GRP39, ELM02	J01		
	9		1	38	4	3			L	STATOR (WIRE FIELD)			
			1	39	2	2			M	TO GRP38, ELM01 (CAPSTAN MOTOR)	P02		
CVIDEO	9		1	23	13	2			L	COMP. VIDEO IN	J12		
	9		1	23	14	2			L	COMP. VIDEO IN	J13		
DIRSELEC			1	22	25	13B				FLOPPY DISK CONTROLLER	J10		1.820.726.00
			1	22	26	18				FLOPPY DISK CONNECTOR	P13		1.820.000.00
DISKCHAN			1	22	25	22B				FLOPPY DISK CONTROLLER	J10		1.820.726.00
			1	22	26	2				FLOPPY DISK CONNECTOR	P13		1.820.000.00
DLBGN-01			3	1	2	2B				CONTROLLER INTERNAL NRS CH 1	J02		1.820.815.00
			3	1	32	11				NOISE REDUCTION, CH 1	J23		
DLBGN-02			3	1	7	2B				CONTROLLER INTERNAL NRS CH 2	J07		1.820.815.00
			3	1	37	11				NOISE REDUCTION, CH 2	J28		
DLBGN-03			3	1	12	2B				CONTROLLER INTERNAL NRS CH 3	J12		1.820.815.00
			3	1	42	11				NOISE REDUCTION, CH 3	J33		
DLBGN-04			3	1	17	2B				CONTROLLER INTERNAL NRS CH 4	J17		1.820.815.00
			3	1	47	11				NOISE REDUCTION, CH 4	J38		
DLBGN-05			3	2	2	2B				CONTROLLER INTERNAL NRS CH 5	J02		1.820.815.00
			3	2	32	11				NOISE REDUCTION, CH 5	J23		
DLBGN-06			3	2	7	2B				CONTROLLER INTERNAL NRS CH 6	J07		1.820.815.00
			3	2	37	11				NOISE REDUCTION, CH 6	J28		
DLBGN-07			3	2	12	2B				CONTROLLER INTERNAL NRS CH 7	J12		1.820.815.00
			3	2	42	11				NOISE REDUCTION, CH 7	J33		
DLBGN-08			3	2	17	2B				CONTROLLER INTERNAL NRS CH 8	J17		1.820.815.00
			3	2	47	11				NOISE REDUCTION, CH 8	J38		
DLBGN-09			4	1	2	2B				CONTROLLER INTERNAL NRS CH 9	J02		1.820.815.00
			4	1	32	11				NOISE REDUCTION, CH 9	J23		
			4	4	11	11			D	TO GRP01, ELM32 (AUDIO BASIS B.)	P01		
DLBGN-10			4	1	7	2B				CONTROLLER INTERNAL NRS CH10	J07		1.820.815.00
			4	1	37	11				NOISE REDUCTION, CH10	J28		
			4	4	12	11			D	TO GRP01, ELM37 (AUDIO BASIS B.)	P02		
DLBGN-11			4	1	12	2B				CONTROLLER INTERNAL NRS CH11	J12		1.820.815.00
			4	1	42	11				NOISE REDUCTION, CH11	J33		
			4	4	13	11			D	TO GRP01, ELM42 (AUDIO BASIS B.)	P03		
DLBGN-12			4	1	17	2B				CONTROLLER INTERNAL NRS CH12	J17		1.820.815.00
			4	1	47	11				NOISE REDUCTION, CH12	J38		
			4	4	14	11			D	TO GRP01, ELM47 (AUDIO BASIS B.)	P04		

```
*****************************************************************************************************************************
*   WILLI STUDER AG   *   S I G N A L   W I R E   L I S T          * 89/07/20 *  9:25 *  P A G E 133  *
*****************************************************************************************************************************
*                         * TAPE TRANSPORT & AUDIO MCH *                        * 89/04/19 - 00                              *
*****************************************************************************************************************************
```

SIGNAL NAME	COLOR	MI	ASY	GRP	ELM	PNT	S	LV	TYPE	DESCRIPTION OF ELEMENT		REMARK	ELEMENT NR.
DLBGN-13			4	2	2	2B				CONTROLLER INTERNAL NRS CH13	J02		1.820.815.00
			4	2	32	11				NOISE REDUCTION, CH13	J23		
			4	4	15	11			D	TO GRP02, ELM32 (AUDIO BASIS B.)	P05		
DLBGN-14			4	2	7	2B				CONTROLLER INTERNAL NRS CH14	J07		1.820.815.00
			4	2	37	11				NOISE REDUCTION, CH14	J28		
			4	4	16	11			D	TO GRP02, ELM37 (AUDIO BASIS B.)	P06		
DLBGN-15			4	2	12	2B				CONTROLLER INTERNAL NRS CH15	J12		1.820.815.00
			4	2	42	11				NOISE REDUCTION, CH15	J33		
			4	4	17	11			D	TO GRP02, ELM42 (AUDIO BASIS B.)	P07		
DLBGN-16			4	2	17	2B				CONTROLLER INTERNAL NRS CH16	J17		1.820.815.00
			4	2	47	11				NOISE REDUCTION, CH16	J38		
			4	4	18	11			D	TO GRP02, ELM47 (AUDIO BASIS B.)	P08		
DLBGN-17			5	1	2	2B				CONTROLLER INTERNAL NRS CH17	J02		1.820.815.00
			5	1	32	11				NOISE REDUCTION, CH17	J23		
			5	4	11	11			D	TO GRP01, ELM32 (AUDIO BASIS B.)	P01		
DLBGN-18			5	1	7	2B				CONTROLLER INTERNAL NRS CH18	J07		1.820.815.00
			5	1	37	11				NOISE REDUCTION, CH18	J28		
			5	4	12	11			D	TO GRP01, ELM37 (AUDIO BASIS B.)	P02		
DLBGN-19			5	1	12	2B				CONTROLLER INTERNAL NRS CH19	J12		1.820.815.00
			5	1	42	11				NOISE REDUCTION, CH19	J33		
			5	4	13	11			D	TO GRP01, ELM42 (AUDIO BASIS B.)	P03		
DLBGN-20			5	1	17	2B				CONTROLLER INTERNAL NRS CH20	J17		1.820.815.00
			5	1	47	11				NOISE REDUCTION, CH20	J38		
			5	4	14	11			D	TO GRP01, ELM47 (AUDIO BASIS B.)	P04		
DLBGN-21			5	2	2	2B				CONTROLLER INTERNAL NRS CH21	J02		1.820.815.00
			5	2	32	11				NOISE REDUCTION, CH21	J23		
			5	4	15	11			D	TO GRP02, ELM32 (AUDIO BASIS B.)	P05		
DLBGN-22			5	2	7	2B				CONTROLLER INTERNAL NRS CH22	J07		1.820.815.00
			5	2	37	11				NOISE REDUCTION, CH22	J28		
			5	4	16	11			D	TO GRP02, ELM37 (AUDIO BASIS B.)	P06		
DLBGN-23			5	2	12	2B				CONTROLLER INTERNAL NRS CH23	J12		1.820.815.00
			5	2	42	11				NOISE REDUCTION, CH23	J33		
			5	4	17	11			D	TO GRP02, ELM42 (AUDIO BASIS B.)	P07		
DLBGN-24			5	2	17	2B				CONTROLLER INTERNAL NRS CH24	J17		1.820.815.00
			5	2	47	11				NOISE REDUCTION, CH24	J38		
			5	4	18	11			D	TO GRP02, ELM47 (AUDIO BASIS B.)	P08		
DLBIN-01			3	1	2	1A				CONTROLLER INTERNAL NRS CH 1	J02		1.820.815.00
			3	1	32	13				NOISE REDUCTION, CH 1	J23		
			3	4	1	10				NOISE REDUCTION UNIT CH 1	J11		
	9		3	4	11	13			D	TO GRP01, ELM32 (AUDIO BASIS B.)	P11		
DLBIN-02			3	1	7	1A				CONTROLLER INTERNAL NRS CH 2	J07		1.820.815.00
			3	1	37	13				NOISE REDUCTION, CH 2	J28		
	9		3	4	21	13			D	TO GRP01, ELM37 (AUDIO BASIS B.)	P21		

WILLI STUDER AG * S I G N A L W I R E L I S T * 89/07/20 * 9:25 * P A G E 134 *

* TAPE TRANSPORT & AUDIO MCH * * 89/04/19 - 00 *

SIGNAL NAME	COLOR	MI	ASY	GRP	ELM	PNT	S	LV	TYPE	DESCRIPTION OF ELEMENT		REMARK	ELEMENT NR.
DLBIN-03			3	1	12	1A				CONTROLLER INTERNAL NRS CH 3	J12		1.820.815.00
			3	1	42	13				NOISE REDUCTION, CH 3	J33		
	9		3	4	31	13			D	TO GRP01, ELM42 (AUDIO BASIS B.)	P31		
DLBIN-04			3	1	17	1A				CONTROLLER INTERNAL NRS CH 4	J17		1.820.815.00
			3	1	47	13				NOISE REDUCTION, CH 4	J38		
	9		3	4	41	13			D	TO GRP01, ELM47 (AUDIO BASIS B.)	P41		
DLBIN-05			3	2	2	1A				CONTROLLER INTERNAL NRS CH 5	J02		1.820.815.00
			3	2	32	13				NOISE REDUCTION, CH 5	J23		
	9		3	4	51	13			D	TO GRP02, ELM32 (AUDIO BASIS B.)	P51		
DLBIN-06			3	2	7	1A				CONTROLLER INTERNAL NRS CH 6	J07		1.820.815.00
			3	2	37	13				NOISE REDUCTION, CH 6	J28		
	9		3	4	61	13			D	TO GRP02, ELM37 (AUDIO BASIS B.)	P61		
DLBIN-07			3	2	12	1A				CONTROLLER INTERNAL NRS CH 7	J12		1.820.815.00
			3	2	42	13				NOISE REDUCTION, CH 7	J33		
	9		3	4	71	13			D	TO GRP02, ELM42 (AUDIO BASIS B.)	P71		
DLBIN-08			3	2	17	1A				CONTROLLER INTERNAL NRS CH 8	J17		1.820.815.00
			3	2	47	13				NOISE REDUCTION, CH 8	J38		
	9		3	4	81	13			D	TO GRP02, ELM47 (AUDIO BASIS B.)	P81		
DLBIN-09			4	1	2	1A				CONTROLLER INTERNAL NRS CH 9	J02		1.820.815.00
			4	1	32	13				NOISE REDUCTION, CH 9	J23		
			4	4	1	10				NOISE REDUCTION UNIT CH 9	J01		
			4	4	11	13			D	TO GRP01, ELM32 (AUDIO BASIS B.)	P01		
DLBIN-10			4	1	7	1A				CONTROLLER INTERNAL NRS CH10	J07		1.820.815.00
			4	1	37	13				NOISE REDUCTION, CH10	J28		
			4	4	12	13			D	TO GRP01, ELM37 (AUDIO BASIS B.)	P02		
DLBIN-11			4	1	12	1A				CONTROLLER INTERNAL NRS CH11	J12		1.820.815.00
			4	1	42	13				NOISE REDUCTION, CH11	J33		
			4	4	13	13			D	TO GRP01, ELM42 (AUDIO BASIS B.)	P03		
DLBIN-12			4	1	17	1A				CONTROLLER INTERNAL NRS CH12	J17		1.820.815.00
			4	1	47	13				NOISE REDUCTION, CH12	J38		
			4	4	14	13			D	TO GRP01, ELM47 (AUDIO BASIS B.)	P04		
DLBIN-13			4	2	2	1A				CONTROLLER INTERNAL NRS CH13	J02		1.820.815.00
			4	2	32	13				NOISE REDUCTION, CH13	J23		
			4	4	15	13			D	TO GRP02, ELM32 (AUDIO BASIS B.)	P05		
DLBIN-14			4	2	7	1A				CONTROLLER INTERNAL NRS CH14	J07		1.820.815.00
			4	2	37	13				NOISE REDUCTION, CH14	J28		
			4	4	16	13			D	TO GRP02, ELM37 (AUDIO BASIS B.)	P06		
DLBIN-15			4	2	12	1A				CONTROLLER INTERNAL NRS CH15	J12		1.820.815.00
			4	2	42	13				NOISE REDUCTION, CH15	J33		
			4	4	17	13			D	TO GRP02, ELM42 (AUDIO BASIS B.)	P07		
DLBIN-16			4	2	17	1A				CONTROLLER INTERNAL NRS CH16	J17		1.820.815.00
			4	2	47	13				NOISE REDUCTION, CH16	J38		
			4	4	18	13			D	TO GRP02, ELM47 (AUDIO BASIS B.)	P08		

* WILLI STUDER AG * S I G N A L W I R E L I S T * 89/07/20 * 9:25 * P A G E 135 *
* * TAPE TRANSPORT & AUDIO MCH * * 89/04/19 - 00 *

SIGNAL NAME	COLOR	MI	ASY	GRP	ELM	PNT	S	LV	TYPE	DESCRIPTION OF ELEMENT		REMARK	ELEMENT NR.
DLBIN-17			5	1	2	1A				CONTROLLER INTERNAL NRS CH17	J02		1.820.815.00
			5	1	32	13				NOISE REDUCTION, CH17	J23		
			5	4	1	10				NOISE REDUCTION UNIT CH17	J01		
			5	4	11	13			D	TO GRP01, ELM32 (AUDIO BASIS B.)	P01		
DLBIN-18			5	1	7	1A				CONTROLLER INTERNAL NRS CH18	J07		1.820.815.00
			5	1	37	13				NOISE REDUCTION, CH18	J28		
			5	4	12	13			D	TO GRP01, ELM37 (AUDIO BASIS B.)	P02		
DLBIN-19			5	1	12	1A				CONTROLLER INTERNAL NRS CH19	J12		1.820.815.00
			5	1	42	13				NOISE REDUCTION, CH19	J33		
			5	4	13	13			D	TO GRP01, ELM42 (AUDIO BASIS B.)	P03		
DLBIN-20			5	1	17	1A				CONTROLLER INTERNAL NRS CH20	J17		1.820.815.00
			5	1	47	13				NOISE REDUCTION, CH20	J38		
			5	4	14	13			D	TO GRP01, ELM47 (AUDIO BASIS B.)	P04		
DLBIN-21			5	2	2	1A				CONTROLLER INTERNAL NRS CH21	J02		1.820.815.00
			5	2	32	13				NOISE REDUCTION, CH21	J23		
			5	4	15	13			D	TO GRP02, ELM32 (AUDIO BASIS B.)	P05		
DLBIN-22			5	2	7	1A				CONTROLLER INTERNAL NRS CH22	J07		1.820.815.00
			5	2	37	13				NOISE REDUCTION, CH22	J28		
			5	4	16	13			D	TO GRP02, ELM37 (AUDIO BASIS B.)	P06		
DLBIN-23			5	2	12	1A				CONTROLLER INTERNAL NRS CH23	J12		1.820.815.00
			5	2	42	13				NOISE REDUCTION, CH23	J33		
			5	4	17	13			D	TO GRP02, ELM42 (AUDIO BASIS B.)	P07		
DLBIN-24			5	2	17	1A				CONTROLLER INTERNAL NRS CH24	J17		1.820.815.00
			5	2	47	13				NOISE REDUCTION, CH24	J38		
			5	4	18	13			D	TO GRP02, ELM47 (AUDIO BASIS B.)	P08		
DL80A-01			3	1	2	4A				CONTROLLER INTERNAL NRS CH 1	J02		1.820.815.00
			3	1	32	9				NOISE REDUCTION, CH 1	J23		
			3	4	1	4				NOISE REDUCTION UNIT CH 1	J11		
	9		3	4	11	9			D	TO GRP01, ELM32 (AUDIO BASIS B.)	P11		
DL80A-02			3	1	7	4A				CONTROLLER INTERNAL NRS CH 2	J07		1.820.815.00
			3	1	37	9				NOISE REDUCTION, CH 2	J28		
	9		3	4	21	9			D	TO GRP01, ELM37 (AUDIO BASIS B.)	P21		
DL80A-03			3	1	12	4A				CONTROLLER INTERNAL NRS CH 3	J12		1.820.815.00
			3	1	42	9				NOISE REDUCTION, CH 3	J33		
	9		3	4	31	9			D	TO GRP01, ELM42 (AUDIO BASIS B.)	P31		
DL80A-04			3	1	17	4A				CONTROLLER INTERNAL NRS CH 4	J17		1.820.815.00
			3	1	47	9				NOISE REDUCTION, CH 4	J38		
	9		3	4	41	9			D	TO GRP01, ELM47 (AUDIO BASIS B.)	P41		
DL80A-05			3	2	2	4A				CONTROLLER INTERNAL NRS CH 5	J02		1.820.815.00
			3	2	32	9				NOISE REDUCTION, CH 5	J23		
	9		3	4	51	9			D	TO GRP02, ELM32 (AUDIO BASIS B.)	P51		

* WILLI STUDER AG * S I G N A L W I R E L I S T * 89/07/20 * 9:25 * P A G E 136 *
* * TAPE TRANSPORT & AUDIO MCH * * 89/04/19 - 00 *

SIGNAL NAME	COLOR	MI	ASY	GRP	ELM	PNT	S	LV	TYPE	DESCRIPTION OF ELEMENT		REMARK	ELEMENT NR.
DL80A-06			3	2	7	4A				CONTROLLER INTERNAL NRS CH 6	J07		1.820.815.00
			3	2	37	9				NOISE REDUCTION, CH 6	J28		
	9		3	4	61	9			D	TO GRP02, ELM37 (AUDIO BASIS B.)	P61		
DL80A-07			3	2	12	4A				CONTROLLER INTERNAL NRS CH 7	J12		1.820.815.00
			3	2	42	9				NOISE REDUCTION, CH 7	J33		
	9		3	4	71	9			D	TO GRP02, ELM42 (AUDIO BASIS B.)	P71		
DL80A-08			3	2	17	4A				CONTROLLER INTERNAL NRS CH 8	J17		1.820.815.00
			3	2	47	9				NOISE REDUCTION, CH 8	J38		
	9		3	4	81	9			D	TO GRP02, ELM47 (AUDIO BASIS B.)	P81		
DL80A-09			4	1	2	4A				CONTROLLER INTERNAL NRS CH 9	J02		1.820.815.00
			4	1	32	9				NOISE REDUCTION, CH 9	J23		
			4	4	1	4				NOISE REDUCTION UNIT CH 9	J01		
			4	4	11	9			D	TO GRP01, ELM32 (AUDIO BASIS B.)	P01		
DL80A-10			4	1	7	4A				CONTROLLER INTERNAL NRS CH10	J07		1.820.815.00
			4	1	37	9				NOISE REDUCTION, CH10	J28		
			4	4	12	9			D	TO GRP01, ELM37 (AUDIO BASIS B.)	P02		
DL80A-11			4	1	12	4A				CONTROLLER INTERNAL NRS CH11	J12		1.820.815.00
			4	1	42	9				NOISE REDUCTION, CH11	J33		
			4	4	13	9			D	TO GRP01, ELM42 (AUDIO BASIS B.)	P03		
DL80A-12			4	1	17	4A				CONTROLLER INTERNAL NRS CH12	J17		1.820.815.00
			4	1	47	9				NOISE REDUCTION, CH12	J38		
			4	4	14	9			D	TO GRP01, ELM47 (AUDIO BASIS B.)	P04		
DL80A-13			4	2	2	4A				CONTROLLER INTERNAL NRS CH13	J02		1.820.815.00
			4	2	32	9				NOISE REDUCTION, CH13	J23		
			4	4	15	9			D	TO GRP02, ELM32 (AUDIO BASIS B.)	P05		
DL80A-14			4	2	7	4A				CONTROLLER INTERNAL NRS CH14	J07		1.820.815.00
			4	2	37	9				NOISE REDUCTION, CH14	J28		
			4	4	16	9			D	TO GRP02, ELM37 (AUDIO BASIS B.)	P06		
DL80A-15			4	2	12	4A				CONTROLLER INTERNAL NRS CH15	J12		1.820.815.00
			4	2	42	9				NOISE REDUCTION, CH15	J33		
			4	4	17	9			D	TO GRP02, ELM42 (AUDIO BASIS B.)	P07		
DL80A-16			4	2	17	4A				CONTROLLER INTERNAL NRS CH16	J17		1.820.815.00
			4	2	47	9				NOISE REDUCTION, CH16	J38		
			4	4	18	9			D	TO GRP02, ELM47 (AUDIO BASIS B.)	P08		
DL80A-17			5	1	2	4A				CONTROLLER INTERNAL NRS CH17	J02		1.820.815.00
			5	1	32	9				NOISE REDUCTION, CH17	J23		
			5	4	1	4				NOISE REDUCTION UNIT CH17	J01		
			5	4	11	9			D	TO GRP01, ELM32 (AUDIO BASIS B.)	P01		
DL80A-18			5	1	7	4A				CONTROLLER INTERNAL NRS CH18	J07		1.820.815.00
			5	1	37	9				NOISE REDUCTION, CH18	J28		
			5	4	12	9			D	TO GRP01, ELM37 (AUDIO BASIS B.)	P02		

WILLI STUDER AG * SIGNAL WIRE LIST * 89/07/20 * 9:25 * PAGE 137
* TAPE TRANSPORT & AUDIO MCH * * 89/04/19 - 00

SIGNAL NAME	COLOR	MI	ASY	GRP	ELM	PNT	S	LV	TYPE	DESCRIPTION OF ELEMENT		REMARK	ELEMENT NR.
DL80A-19			5	1	12	4A				CONTROLLER INTERNAL NRS CH19	J12		1.820.815.00
			5	1	42	9				NOISE REDUCTION, CH19	J33		
			5	4	13	9			D	TO GRP01, ELM42 (AUDIO BASIS B.)	P03		
DL80A-20			5	1	17	4A				CONTROLLER INTERNAL NRS CH20	J17		1.820.815.00
			5	1	47	9				NOISE REDUCTION, CH20	J38		
			5	4	14	9			D	TO GRP01, ELM47 (AUDIO BASIS B.)	P04		
DL80A-21			5	2	2	4A				CONTROLLER INTERNAL NRS CH21	J02		1.820.815.00
			5	2	32	9				NOISE REDUCTION, CH21	J23		
			5	4	15	9			D	TO GRP02, ELM32 (AUDIO BASIS B.)	P05		
DL80A-22			5	2	7	4A				CONTROLLER INTERNAL NRS CH22	J07		1.820.815.00
			5	2	37	9				NOISE REDUCTION, CH22	J28		
			5	4	16	9			D	TO GRP02, ELM37 (AUDIO BASIS B.)	P06		
DL80A-23			5	2	12	4A				CONTROLLER INTERNAL NRS CH23	J12		1.820.815.00
			5	2	42	9				NOISE REDUCTION, CH23	J33		
			5	4	17	9			D	TO GRP02, ELM42 (AUDIO BASIS B.)	P07		
DL80A-24			5	2	17	4A				CONTROLLER INTERNAL NRS CH24	J17		1.820.815.00
			5	2	47	9				NOISE REDUCTION, CH24	J38		
			5	4	18	9			D	TO GRP02, ELM47 (AUDIO BASIS B.)	P08		
DL80B-01			3	1	2	5B				CONTROLLER INTERNAL NRS CH 1	J02		1.820.815.00
			3	1	32	7				NOISE REDUCTION, CH 1	J23		
DL80B-02			3	1	7	5B				CONTROLLER INTERNAL NRS CH 2	J07		1.820.815.00
			3	1	37	7				NOISE REDUCTION, CH 2	J28		
DL80B-03			3	1	12	5B				CONTROLLER INTERNAL NRS CH 3	J12		1.820.815.00
			3	1	42	7				NOISE REDUCTION, CH 3	J33		
DL80B-04			3	1	17	5B				CONTROLLER INTERNAL NRS CH 4	J17		1.820.815.00
			3	1	47	7				NOISE REDUCTION, CH 4	J38		
DL80B-05			3	2	2	5B				CONTROLLER INTERNAL NRS CH 5	J02		1.820.815.00
			3	2	32	7				NOISE REDUCTION, CH 5	J23		
DL80B-06			3	2	7	5B				CONTROLLER INTERNAL NRS CH 6	J07		1.820.815.00
			3	2	37	7				NOISE REDUCTION, CH 6	J28		
DL80B-07			3	2	12	5B				CONTROLLER INTERNAL NRS CH 7	J12		1.820.815.00
			3	2	42	7				NOISE REDUCTION, CH 7	J33		
DL80B-08			3	2	17	5B				CONTROLLER INTERNAL NRS CH 8	J17		1.820.815.00
			3	2	47	7				NOISE REDUCTION, CH 8	J38		
DL80B-09			4	1	2	5B				CONTROLLER INTERNAL NRS CH 9	J02		1.820.815.00
			4	1	32	7				NOISE REDUCTION, CH 9	J23		
			4	4	11	7			D	TO GRP01, ELM32 (AUDIO BASIS B.)	P01		
DL80B-10			4	1	7	5B				CONTROLLER INTERNAL NRS CH10	J07		1.820.815.00
			4	1	37	7				NOISE REDUCTION, CH10	J28		
			4	4	12	7			D	TO GRP01, ELM37 (AUDIO BASIS B.)	P02		

WILLI STUDER AG * SIGNAL WIRE LIST * 89/07/20 * 9:25 * PAGE 138
* TAPE TRANSPORT & AUDIO MCH * * 89/04/19 - 00

SIGNAL NAME	COLOR	MI	ASY	GRP	ELM	PNT	S	LV	TYPE	DESCRIPTION OF ELEMENT		REMARK	ELEMENT NR.
DL80B-11			4	1	12	5B				CONTROLLER INTERNAL NRS CH11	J12		1.820.815.00
			4	1	42	7				NOISE REDUCTION, CH11	J33		
			4	4	13	7			D	TO GRP01, ELM42 (AUDIO BASIS B.)	P03		
DL80B-12			4	1	17	5B				CONTROLLER INTERNAL NRS CH12	J17		1.820.815.00
			4	1	47	7				NOISE REDUCTION, CH12	J38		
			4	4	14	7			D	TO GRP01, ELM47 (AUDIO BASIS B.)	P04		
DL80B-13			4	2	2	5B				CONTROLLER INTERNAL NRS CH13	J02		1.820.815.00
			4	2	32	7				NOISE REDUCTION, CH13	J23		
			4	4	15	7			D	TO GRP02, ELM32 (AUDIO BASIS B.)	P05		
DL80B-14			4	2	7	5B				CONTROLLER INTERNAL NRS CH14	J07		1.820.815.00
			4	2	37	7				NOISE REDUCTION, CH14	J28		
			4	4	16	7			D	TO GRP02, ELM37 (AUDIO BASIS B.)	P06		
DL80B-15			4	2	12	5B				CONTROLLER INTERNAL NRS CH15	J12		1.820.815.00
			4	2	42	7				NOISE REDUCTION, CH15	J33		
			4	4	17	7			D	TO GRP02, ELM42 (AUDIO BASIS B.)	P07		
DL80B-16			4	2	17	5B				CONTROLLER INTERNAL NRS CH16	J17		1.820.815.00
			4	2	47	7				NOISE REDUCTION, CH16	J38		
			4	4	18	7			D	TO GRP02, ELM47 (AUDIO BASIS B.)	P08		
DL80B-17			5	1	2	5B				CONTROLLER INTERNAL NRS CH17	J02		1.820.815.00
			5	1	32	7				NOISE REDUCTION, CH17	J23		
			5	4	11	7			D	TO GRP01, ELM32 (AUDIO BASIS B.)	P01		
DL80B-18			5	1	7	5B				CONTROLLER INTERNAL NRS CH18	J07		1.820.815.00
			5	1	37	7				NOISE REDUCTION, CH18	J28		
			5	4	12	7			D	TO GRP01, ELM37 (AUDIO BASIS B.)	P02		
DL80B-19			5	1	12	5B				CONTROLLER INTERNAL NRS CH19	J12		1.820.815.00
			5	1	42	7				NOISE REDUCTION, CH19	J33		
			5	4	13	7			D	TO GRP01, ELM42 (AUDIO BASIS B.)	P03		
DL80B-20			5	1	17	5B				CONTROLLER INTERNAL NRS CH20	J17		1.820.815.00
			5	1	47	7				NOISE REDUCTION, CH20	J38		
			5	4	14	7			D	TO GRP01, ELM47 (AUDIO BASIS B.)	P04		
DL80B-21			5	2	2	5B				CONTROLLER INTERNAL NRS CH21	J02		1.820.815.00
			5	2	32	7				NOISE REDUCTION, CH21	J23		
			5	4	15	7			D	TO GRP02, ELM32 (AUDIO BASIS B.)	P05		
DL80B-22			5	2	7	5B				CONTROLLER INTERNAL NRS CH22	J07		1.820.815.00
			5	2	37	7				NOISE REDUCTION, CH22	J28		
			5	4	16	7			D	TO GRP02, ELM37 (AUDIO BASIS B.)	P06		
DL80B-23			5	2	12	5B				CONTROLLER INTERNAL NRS CH23	J12		1.820.815.00
			5	2	42	7				NOISE REDUCTION, CH23	J33		
			5	4	17	7			D	TO GRP02, ELM42 (AUDIO BASIS B.)	P07		
DL80B-24			5	2	17	5B				CONTROLLER INTERNAL NRS CH24	J17		1.820.815.00
			5	2	47	7				NOISE REDUCTION, CH24	J38		
			5	4	18	7			D	TO GRP02, ELM47 (AUDIO BASIS B.)	P08		

* WILLI STUDER AG * S I G N A L W I R E L I S T * 89/07/20 * 9:25 * P A G E 139 *

* * TAPE TRANSPORT & AUDIO MCH * * 89/04/19 - 00 *

SIGNAL NAME	COLOR	MI	ASY	GRP	ELM	PNT	S	LV	TYPE	DESCRIPTION OF ELEMENT		REMARK	ELEMENT NR.
DRIVESL0			1	22	25	17B				FLOPPY DISK CONTROLLER	J10		1.820.726.00
			1	22	26	10				FLOPPY DISK CONNECTOR	P13		1.820.000.00
DRIVESL1			1	22	25	16B				FLOPPY DISK CONTROLLER	J10		1.820.726.00
			1	22	26	12				FLOPPY DISK CONNECTOR	P13		1.820.000.00
DRIVESL2			1	22	25	15B				FLOPPY DISK CONTROLLER	J10		1.820.726.00
			1	22	26	14				FLOPPY DISK CONNECTOR	P13		1.820.000.00
DRIVESL3			1	22	25	19B				FLOPPY DISK CONTROLLER	J10		1.820.726.00
			1	22	26	6				FLOPPY DISK CONNECTOR	P13		1.820.000.00
EQUAL-01			3	1	3	2				REPRODUCE AMPLIFIER, CH 1	J03		1.820.710.00
			3	1	4	2				RECORD AMPLIFIER, CH 1	J04		1.820.811.00
EQUAL-02			3	1	8	2				REPRODUCE AMPLIFIER, CH 2	J08		1.820.710.00
			3	1	9	2				RECORD AMPLIFIER, CH 2	J09		1.820.811.00
EQUAL-03			3	1	13	2				REPRODUCE AMPLIFIER, CH 3	J13		1.820.710.00
			3	1	14	2				RECORD AMPLIFIER, CH 3	J14		1.820.811.00
EQUAL-04			3	1	18	2				REPRODUCE AMPLIFIER, CH 4	J18		1.820.710.00
			3	1	19	2				RECORD AMPLIFIER, CH 4	J19		1.820.811.00
EQUAL-05			3	2	3	2				REPRODUCE AMPLIFIER, CH 5	J03		1.820.710.00
			3	2	4	2				RECORD AMPLIFIER, CH 5	J04		1.820.811.00
EQUAL-06			3	2	8	2				REPRODUCE AMPLIFIER, CH 6	J08		1.820.710.00
			3	2	9	2				RECORD AMPLIFIER, CH 6	J09		1.820.811.00
EQUAL-07			3	2	13	2				REPRODUCE AMPLIFIER, CH 7	J13		1.820.710.00
			3	2	14	2				RECORD AMPLIFIER, CH 7	J14		1.820.811.00
EQUAL-08			3	2	18	2				REPRODUCE AMPLIFIER, CH 8	J18		1.820.710.00
			3	2	19	2				RECORD AMPLIFIER, CH 8	J19		1.820.811.00
EQUAL-09			4	1	3	2				REPRODUCE AMPLIFIER, CH 9	J03		1.820.710.00
			4	1	4	2				RECORD AMPLIFIER, CH 9	J04		1.820.811.00
EQUAL-10			4	1	8	2				REPRODUCE AMPLIFIER, CH10	J08		1.820.710.00
			4	1	9	2				RECORD AMPLIFIER, CH10	J09		1.820.811.00
EQUAL-11			4	1	13	2				REPRODUCE AMPLIFIER, CH11	J13		1.820.710.00
			4	1	14	2				RECORD AMPLIFIER, CH11	J14		1.820.811.00
EQUAL-12			4	1	18	2				REPRODUCE AMPLIFIER, CH12	J18		1.820.710.00
			4	1	19	2				RECORD AMPLIFIER, CH12	J19		1.820.811.00
EQUAL-13			4	2	3	2				REPRODUCE AMPLIFIER, CH13	J03		1.820.710.00
			4	2	4	2				RECORD AMPLIFIER, CH13	J04		1.820.811.00
EQUAL-14			4	2	8	2				REPRODUCE AMPLIFIER, CH14	J08		1.820.710.00
			4	2	9	2				RECORD AMPLIFIER, CH14	J09		1.820.811.00
EQUAL-15			4	2	13	2				REPRODUCE AMPLIFIER, CH15	J13		1.820.710.00
			4	2	14	2				RECORD AMPLIFIER, CH15	J14		1.820.811.00

* WILLI STUDER AG * S I G N A L W I R E L I S T * 89/07/20 * 9:25 * P A G E 140 *

* * TAPE TRANSPORT & AUDIO MCH * * 89/04/19 - 00 *

SIGNAL NAME	COLOR	MI	ASY	GRP	ELM	PNT	S	LV	TYPE	DESCRIPTION OF ELEMENT		REMARK	ELEMENT NR.
EQUAL-16			4	2	18	2				REPRODUCE AMPLIFIER, CH16	J18		1.820.710.00
			4	2	19	2				RECORD AMPLIFIER, CH16	J19		1.820.811.00
EQUAL-17			5	1	3	2				REPRODUCE AMPLIFIER, CH17	J03		1.820.710.00
			5	1	4	2				RECORD AMPLIFIER, CH17	J04		1.820.811.00
EQUAL-18			5	1	8	2				REPRODUCE AMPLIFIER, CH18	J08		1.820.710.00
			5	1	9	2				RECORD AMPLIFIER, CH18	J09		1.820.811.00
EQUAL-19			5	1	13	2				REPRODUCE AMPLIFIER, CH19	J13		1.820.710.00
			5	1	14	2				RECORD AMPLIFIER, CH19	J14		1.820.811.00
EQUAL-20			5	1	18	2				REPRODUCE AMPLIFIER, CH20	J18		1.820.710.00
			5	1	19	2				RECORD AMPLIFIER, CH20	J19		1.820.811.00
EQUAL-21			5	2	3	2				REPRODUCE AMPLIFIER, CH21	J03		1.820.710.00
			5	2	4	2				RECORD AMPLIFIER, CH21	J04		1.820.811.00
EQUAL-22			5	2	8	2				REPRODUCE AMPLIFIER, CH22	J08		1.820.710.00
			5	2	9	2				RECORD AMPLIFIER, CH22	J09		1.820.811.00
EQUAL-23			5	2	13	2				REPRODUCE AMPLIFIER, CH23	J13		1.820.710.00
			5	2	14	2				RECORD AMPLIFIER, CH23	J14		1.820.811.00
EQUAL-24			5	2	18	2				REPRODUCE AMPLIFIER, CH24	J18		1.820.710.00
			5	2	19	2				RECORD AMPLIFIER, CH24	J19		1.820.811.00
ERACS-01			3	1	5	9				HF-DRIVER, CH 1	J05		1.820.813.00
ERACS-02			3	1	10	9				HF-DRIVER, CH 2	J10		1.820.813.00
ERACS-03			3	1	15	9				HF-DRIVER, CH 3	J15		1.820.813.00
ERACS-04			3	1	20	9				HF-DRIVER, CH 4	J20		1.820.813.00
ERACS-05			3	2	5	9				HF-DRIVER, CH 5	J05		1.820.813.00
ERACS-06			3	2	10	9				HF-DRIVER, CH 6	J10		1.820.813.00
ERACS-07			3	2	15	9				HF-DRIVER, CH 7	J15		1.820.813.00
ERACS-08			3	2	20	9				HF-DRIVER, CH 8	J20		1.820.813.00
ERACS-09			4	1	5	9				HF-DRIVER, CH 9	J05		1.820.813.00
ERACS-10			4	1	10	9				HF-DRIVER, CH10	J10		1.820.813.00
ERACS-11			4	1	15	9				HF-DRIVER, CH11	J15		1.820.813.00
ERACS-12			4	1	20	9				HF-DRIVER, CH12	J20		1.820.813.00
ERACS-13			4	2	5	9				HF-DRIVER, CH13	J05		1.820.813.00
ERACS-14			4	2	10	9				HF-DRIVER, CH14	J10		1.820.813.00
ERACS-15			4	2	15	9				HF-DRIVER, CH15	J15		1.820.813.00

* WILLI STUDER AG * S I G N A L W I R E L I S T * 89/07/20 * 9:25 * P A G E 141 *
* * TAPE TRANSPORT & AUDIO MCH * * 89/04/19 - 00 *

SIGNAL NAME	COLOR	MI	ASY	GRP	ELM	PNT	S	LV	TYPE	DESCRIPTION OF ELEMENT		REMARK	ELEMENT NR.
ERACS-16			4	2	20	9				HF-DRIVER, CH16	J20		1.820.813.00
ERACS-17			5	1	5	9				HF-DRIVER, CH17	J05		1.820.813.00
ERACS-18			5	1	10	9				HF-DRIVER, CH18	J10		1.820.813.00
ERACS-19			5	1	15	9				HF-DRIVER, CH19	J15		1.820.813.00
ERACS-20			5	1	20	9				HF-DRIVER, CH20	J20		1.820.813.00
ERACS-21			5	2	5	9				HF-DRIVER, CH21	J05		1.820.813.00
ERACS-22			5	2	10	9				HF-DRIVER, CH22	J10		1.820.813.00
ERACS-23			5	2	15	9				HF-DRIVER, CH23	J15		1.820.813.00
ERACS-24			5	2	20	9				HF-DRIVER, CH24	J20		1.820.813.00
ERAHH-01			2	1	1	12				ERASE HEAD, CH 01 TO 08	P01		
			3	1	5	14				HF-DRIVER, CH 1	J05		1.820.813.00
			3	1	35	2				ERASE HEAD, CH 1	J26		
ERAHH-02			2	1	1	10				ERASE HEAD, CH 01 TO 08	P01		
			3	1	10	14				HF-DRIVER, CH 2	J10		1.820.813.00
			3	1	40	2				ERASE HEAD, CH 2	J31		
ERAHH-03			2	1	1	9				ERASE HEAD, CH 01 TO 08	P01		
			3	1	15	14				HF-DRIVER, CH 3	J15		1.820.813.00
			3	1	45	2				ERASE HEAD, CH 3	J36		
ERAHH-04			2	1	1	7				ERASE HEAD, CH 01 TO 08	P01		
			3	1	20	14				HF-DRIVER, CH 4	J20		1.820.813.00
			3	1	50	2				ERASE HEAD, CH 4	J41		
ERAHH-05			2	1	1	6				ERASE HEAD, CH 01 TO 08	P01		
			3	2	5	14				HF-DRIVER, CH 5	J05		1.820.813.00
			3	2	35	2				ERASE HEAD, CH 5	J26		
ERAHH-06			2	1	1	4				ERASE HEAD, CH 01 TO 08	P01		
			3	2	10	14				HF-DRIVER, CH 6	J10		1.820.813.00
			3	2	40	2				ERASE HEAD, CH 6	J31		
ERAHH-07			2	1	1	3				ERASE HEAD, CH 01 TO 08	P01		
			3	2	15	14				HF-DRIVER, CH 7	J15		1.820.813.00
			3	2	45	2				ERASE HEAD, CH 7	J36		
ERAHH-08			2	1	1	1				ERASE HEAD, CH 01 TO 08	P01		
			3	2	20	14				HF-DRIVER, CH 8	J20		1.820.813.00
			3	2	50	2				ERASE HEAD, CH 8	J41		
ERAHH-09			2	1	2	12				ERASE HEAD, CH 09 TO 16	P02		
			4	1	5	14				HF-DRIVER, CH 9	J05		1.820.813.00
			4	1	35	2				ERASE HEAD, CH 9	J26		

* WILLI STUDER AG * S I G N A L W I R E L I S T * 89/07/20 * 9:25 * P A G E 142 *
* * TAPE TRANSPORT & AUDIO MCH * * 89/04/19 - 00 *

SIGNAL NAME	COLOR	MI	ASY	GRP	ELM	PNT	S	LV	TYPE	DESCRIPTION OF ELEMENT		REMARK	ELEMENT NR.
ERAHH-10			2	1	2	10				ERASE HEAD, CH 09 TO 16	P02		
			4	1	10	14				HF-DRIVER, CH10	J10		1.820.813.00
			4	1	40	2				ERASE HEAD, CH10	J31		
ERAHH-11			2	1	2	9				ERASE HEAD, CH 09 TO 16	P02		
			4	1	15	14				HF-DRIVER, CH11	J15		1.820.813.00
			4	1	45	2				ERASE HEAD, CH11	J36		
ERAHH-12			2	1	2	7				ERASE HEAD, CH 09 TO 16	P02		
			4	1	20	14				HF-DRIVER, CH12	J20		1.820.813.00
			4	1	50	2				ERASE HEAD, CH12	J41		
ERAHH-13			2	1	2	6				ERASE HEAD, CH 09 TO 16	P02		
			4	2	5	14				HF-DRIVER, CH13	J05		1.820.813.00
			4	2	35	2				ERASE HEAD, CH13	J26		
ERAHH-14			2	1	2	4				ERASE HEAD, CH 09 TO 16	P02		
			4	2	10	14				HF-DRIVER, CH14	J10		1.820.813.00
			4	2	40	2				ERASE HEAD, CH14	J31		
ERAHH-15			2	1	2	3				ERASE HEAD, CH 09 TO 16	P02		
			4	2	15	14				HF-DRIVER, CH15	J15		1.820.813.00
			4	2	45	2				ERASE HEAD, CH15	J36		
ERAHH-16			2	1	2	1				ERASE HEAD, CH 09 TO 16	P02		
			4	2	20	14				HF-DRIVER, CH16	J20		1.820.813.00
			4	2	50	2				ERASE HEAD, CH16	J41		
ERAHH-17			2	1	3	12				ERASE HEAD, CH 17 TO 24	P03		
			5	1	5	14				HF-DRIVER, CH17	J05		1.820.813.00
			5	1	35	2				ERASE HEAD, CH17	J26		
ERAHH-18			2	1	3	10				ERASE HEAD, CH 17 TO 24	P03		
			5	1	10	14				HF-DRIVER, CH18	J10		1.820.813.00
			5	1	40	2				ERASE HEAD, CH18	J31		
ERAHH-19			2	1	3	9				ERASE HEAD, CH 17 TO 24	P03		
			5	1	15	14				HF-DRIVER, CH19	J15		1.820.813.00
			5	1	45	2				ERASE HEAD, CH19	J36		
ERAHH-20			2	1	3	7				ERASE HEAD, CH 17 TO 24	P03		
			5	1	20	14				HF-DRIVER, CH20	J20		1.820.813.00
			5	1	50	2				ERASE HEAD, CH20	J41		
ERAHH-21			2	1	3	6				ERASE HEAD, CH 17 TO 24	P03		
			5	2	5	14				HF-DRIVER, CH21	J05		1.820.813.00
			5	2	35	2				ERASE HEAD, CH21	J26		
ERAHH-22			2	1	3	4				ERASE HEAD, CH 17 TO 24	P03		
			5	2	10	14				HF-DRIVER, CH22	J10		1.820.813.00
			5	2	40	2				ERASE HEAD, CH22	J31		
ERAHH-23			2	1	3	3				ERASE HEAD, CH 17 TO 24	P03		
			5	2	15	14				HF-DRIVER, CH23	J15		1.820.813.00
			5	2	45	2				ERASE HEAD, CH23	J36		

* WILLI STUDER AG * S I G N A L W I R E L I S T * 89/07/20 * 9:25 * P A G E 143 *
* * TAPE TRANSPORT & AUDIO MCH * * 89/04/19 - 00 *

SIGNAL NAME	COLOR	MI	ASY	GRP	ELM	PNT	S	LV	TYPE	DESCRIPTION OF ELEMENT		REMARK	ELEMENT NR.
ERAHH-24			2	1	3	1				ERASE HEAD, CH 17 TO 24	P03		
			5	2	20	14				HF-DRIVER, CH24	J20		1.820.813.00
			5	2	50	2				ERASE HEAD, CH24	J41		
ERAHL-01			2	1	1	25				ERASE HEAD, CH 01 TO 08	P01		
			3	1	5	12				HF-DRIVER, CH 1	J05		1.820.813.00
			3	1	35	1				ERASE HEAD, CH 1	J26		
ERAHL-02			2	1	1	23				ERASE HEAD, CH 01 TO 08	P01		
			3	1	10	12				HF-DRIVER, CH 2	J10		1.820.813.00
			3	1	40	1				ERASE HEAD, CH 2	J31		
ERAHL-03			2	1	1	22				ERASE HEAD, CH 01 TO 08	P01		
			3	1	15	12				HF-DRIVER, CH 3	J15		1.820.813.00
			3	1	45	1				ERASE HEAD, CH 3	J36		
ERAHL-04			2	1	1	20				ERASE HEAD, CH 01 TO 08	P01		
			3	1	20	12				HF-DRIVER, CH 4	J20		1.820.813.00
			3	1	50	1				ERASE HEAD, CH 4	J41		
ERAHL-05			2	1	1	19				ERASE HEAD, CH 01 TO 08	P01		
			3	2	5	12				HF-DRIVER, CH 5	J05		1.820.813.00
			3	2	35	1				ERASE HEAD, CH 5	J26		
ERAHL-06			2	1	1	17				ERASE HEAD, CH 01 TO 08	P01		
			3	2	10	12				HF-DRIVER, CH 6	J10		1.820.813.00
			3	2	40	1				ERASE HEAD, CH 6	J31		
ERAHL-07			2	1	1	16				ERASE HEAD, CH 01 TO 08	P01		
			3	2	15	12				HF-DRIVER, CH 7	J15		1.820.813.00
			3	2	45	1				ERASE HEAD, CH 7	J36		
ERAHL-08			2	1	1	14				ERASE HEAD, CH 01 TO 08	P01		
			3	2	20	12				HF-DRIVER, CH 8	J20		1.820.813.00
			3	2	50	1				ERASE HEAD, CH 8	J41		
ERAHL-09			2	1	2	25				ERASE HEAD, CH 09 TO 16	P02		
			4	1	5	12				HF-DRIVER, CH 9	J05		1.820.813.00
			4	1	35	1				ERASE HEAD, CH 9	J26		
ERAHL-10			2	1	2	23				ERASE HEAD, CH 09 TO 16	P02		
			4	1	10	12				HF-DRIVER, CH10	J10		1.820.813.00
			4	1	40	1				ERASE HEAD, CH10	J31		
ERAHL-11			2	1	2	22				ERASE HEAD, CH 09 TO 16	P02		
			4	1	15	12				HF-DRIVER, CH11	J15		1.820.813.00
			4	1	45	1				ERASE HEAD, CH11	J36		
ERAHL-12			2	1	2	20				ERASE HEAD, CH 09 TO 16	P02		
			4	1	20	12				HF-DRIVER, CH12	J20		1.820.813.00
			4	1	50	1				ERASE HEAD, CH12	J41		
ERAHL-13			2	1	2	19				ERASE HEAD, CH 09 TO 16	P02		
			4	2	5	12				HF-DRIVER, CH13	J05		1.820.813.00
			4	2	35	1				ERASE HEAD, CH13	J26		

* WILLI STUDER AG * S I G N A L W I R E L I S T * 89/07/20 * 9:25 * P A G E 144 *
* * TAPE TRANSPORT & AUDIO MCH * * 89/04/19 - 00 *

SIGNAL NAME	COLOR	MI	ASY	GRP	ELM	PNT	S	LV	TYPE	DESCRIPTION OF ELEMENT		REMARK	ELEMENT NR.
ERAHL-14			2	1	2	17				ERASE HEAD, CH 09 TO 16	P02		
			4	2	10	12				HF-DRIVER, CH14	J10		1.820.813.00
			4	2	40	1				ERASE HEAD, CH14	J31		
ERAHL-15			2	1	2	16				ERASE HEAD, CH 09 TO 16	P02		
			4	2	15	12				HF-DRIVER, CH15	J15		1.820.813.00
			4	2	45	1				ERASE HEAD, CH15	J36		
ERAHL-16			2	1	2	14				ERASE HEAD, CH 09 TO 16	P02		
			4	2	20	12				HF-DRIVER, CH16	J20		1.820.813.00
			4	2	50	1				ERASE HEAD, CH16	J41		
ERAHL-17			2	1	3	25				ERASE HEAD, CH 17 TO 24	P03		
			5	1	5	12				HF-DRIVER, CH17	J05		1.820.813.00
			5	1	35	1				ERASE HEAD, CH17	J26		
ERAHL-18			2	1	3	23				ERASE HEAD, CH 17 TO 24	P03		
			5	1	10	12				HF-DRIVER, CH18	J10		1.820.813.00
			5	1	40	1				ERASE HEAD, CH18	J31		
ERAHL-19			2	1	3	22				ERASE HEAD, CH 17 TO 24	P03		
			5	1	15	12				HF-DRIVER, CH19	J15		1.820.813.00
			5	1	45	1				ERASE HEAD, CH19	J36		
ERAHL-20			2	1	3	20				ERASE HEAD, CH 17 TO 24	P03		
			5	1	20	12				HF-DRIVER, CH20	J20		1.820.813.00
			5	1	50	1				ERASE HEAD, CH20	J41		
ERAHL-21			2	1	3	19				ERASE HEAD, CH 17 TO 24	P03		
			5	2	5	12				HF-DRIVER, CH21	J05		1.820.813.00
			5	2	35	1				ERASE HEAD, CH21	J26		
ERAHL-22			2	1	3	17				ERASE HEAD, CH 17 TO 24	P03		
			5	2	10	12				HF-DRIVER, CH22	J10		1.820.813.00
			5	2	40	1				ERASE HEAD, CH22	J31		
ERAHL-23			2	1	3	16				ERASE HEAD, CH 17 TO 24	P03		
			5	2	15	12				HF-DRIVER, CH23	J15		1.820.813.00
			5	2	45	1				ERASE HEAD, CH23	J36		
ERAHL-24			2	1	3	14				ERASE HEAD, CH 17 TO 24	P03		
			5	2	20	12				HF-DRIVER, CH24	J20		1.820.813.00
			5	2	50	1				ERASE HEAD, CH24	J41		
ERAHM-01			3	1	5	13				HF-DRIVER, CH 1	J05		1.820.813.00
ERAHM-02			3	1	10	13				HF-DRIVER, CH 2	J10		1.820.813.00
ERAHM-03			3	1	15	13				HF-DRIVER, CH 3	J15		1.820.813.00
ERAHM-04			3	1	20	13				HF-DRIVER, CH 4	J20		1.820.813.00
ERAHM-05			3	2	5	13				HF-DRIVER, CH 5	J05		1.820.813.00
ERAHM-06			3	2	10	13				HF-DRIVER, CH 6	J10		1.820.813.00

SIGNAL NAME	COLOR	MI	ASY	GRP	ELM	PNT	S	LV	TYPE	DESCRIPTION OF ELEMENT		REMARK	ELEMENT NR.
ERAHM-07			3	2	15	13				HF-DRIVER, CH 7	J15		1.820.813.00
ERAHM-08			3	2	20	13				HF-DRIVER, CH 8	J20		1.820.813.00
ERAHM-09			4	1	5	13				HF-DRIVER, CH 9	J05		1.820.813.00
ERAHM-10			4	1	10	13				HF-DRIVER, CH10	J10		1.820.813.00
ERAHM-11			4	1	15	13				HF-DRIVER, CH11	J15		1.820.813.00
ERAHM-12			4	1	20	13				HF-DRIVER, CH12	J20		1.820.813.00
ERAHM-13			4	2	5	13				HF-DRIVER, CH13	J05		1.820.813.00
ERAHM-14			4	2	10	13				HF-DRIVER, CH14	J10		1.820.813.00
ERAHM-15			4	2	15	13				HF-DRIVER, CH15	J15		1.820.813.00
ERAHM-16			4	2	20	13				HF-DRIVER, CH16	J20		1.820.813.00
ERAHM-17			5	1	5	13				HF-DRIVER, CH17	J05		1.820.813.00
ERAHM-18			5	1	10	13				HF-DRIVER, CH18	J10		1.820.813.00
ERAHM-19			5	1	15	13				HF-DRIVER, CH19	J15		1.820.813.00
ERAHM-20			5	1	20	13				HF-DRIVER, CH20	J20		1.820.813.00
ERAHM-21			5	2	5	13				HF-DRIVER, CH21	J05		1.820.813.00
ERAHM-22			5	2	10	13				HF-DRIVER, CH22	J10		1.820.813.00
ERAHM-23			5	2	15	13				HF-DRIVER, CH23	J15		1.820.813.00
ERAHM-24			5	2	20	13				HF-DRIVER, CH24	J20		1.820.813.00
ERAHO-01			2	1	1	24				ERASE HEAD, CH 01 TO 08	P01		
			3	1	5	15				HF-DRIVER, CH 1	J05		1.820.813.00
			3	1	35	4				ERASE HEAD, CH 1	J26		
ERAHO-02			2	1	1	11				ERASE HEAD, CH 01 TO 08	P01		
			3	1	10	15				HF-DRIVER, CH 2	J10		1.820.813.00
			3	1	40	4				ERASE HEAD, CH 2	J31		
ERAHO-03			2	1	1	21				ERASE HEAD, CH 01 TO 08	P01		
			3	1	15	15				HF-DRIVER, CH 3	J15		1.820.813.00
			3	1	45	4				ERASE HEAD, CH 3	J36		
ERAHO-04			2	1	1	8				ERASE HEAD, CH 01 TO 08	P01		
			3	1	20	15				HF-DRIVER, CH 4	J20		1.820.813.00
			3	1	50	4				ERASE HEAD, CH 4	J41		
ERAHO-05			2	1	1	18				ERASE HEAD, CH 01 TO 08	P01		
			3	2	5	15				HF-DRIVER, CH 5	J05		1.820.813.00
			3	2	35	4				ERASE HEAD, CH 5	J26		

SIGNAL NAME	COLOR	MI	ASY	GRP	ELM	PNT	S	LV	TYPE	DESCRIPTION OF ELEMENT		REMARK	ELEMENT NR.
ERAHO-06			2	1	1	5				ERASE HEAD, CH 01 TO 08	P01		
			3	2	10	15				HF-DRIVER, CH 6	J10		1.820.813.00
			3	2	40	4				ERASE HEAD, CH 6	J31		
ERAHO-07			2	1	1	15				ERASE HEAD, CH 01 TO 08	P01		
			3	2	15	15				HF-DRIVER, CH 7	J15		1.820.813.00
			3	2	45	4				ERASE HEAD, CH 7	J36		
ERAHO-08			2	1	1	2				ERASE HEAD, CH 01 TO 08	P01		
			3	2	20	15				HF-DRIVER, CH 8	J20		1.820.813.00
			3	2	50	4				ERASE HEAD, CH 8	J41		
ERAHO-09			2	1	2	24				ERASE HEAD, CH 09 TO 16	P02		
			4	1	5	15				HF-DRIVER, CH 9	J05		1.820.813.00
			4	1	35	4				ERASE HEAD, CH 9	J26		
ERAHO-10			2	1	2	11				ERASE HEAD, CH 09 TO 16	P02		
			4	1	10	15				HF-DRIVER, CH10	J10		1.820.813.00
			4	1	40	4				ERASE HEAD, CH10	J31		
ERAHO-11			2	1	2	21				ERASE HEAD, CH 09 TO 16	P02		
			4	1	15	15				HF-DRIVER, CH11	J15		1.820.813.00
			4	1	45	4				ERASE HEAD, CH11	J36		
ERAHO-12			2	1	2	8				ERASE HEAD, CH 09 TO 16	P02		
			4	1	20	15				HF-DRIVER, CH12	J20		1.820.813.00
			4	1	50	4				ERASE HEAD, CH12	J41		
ERAHO-13			2	1	2	18				ERASE HEAD, CH 09 TO 16	P02		
			4	2	5	15				HF-DRIVER, CH13	J05		1.820.813.00
			4	2	35	4				ERASE HEAD, CH13	J26		
ERAHO-14			2	1	2	5				ERASE HEAD, CH 09 TO 16	P02		
			4	2	10	15				HF-DRIVER, CH14	J10		1.820.813.00
			4	2	40	4				ERASE HEAD, CH14	J31		
ERAHO-15			2	1	2	15				ERASE HEAD, CH 09 TO 16	P02		
			4	2	15	15				HF-DRIVER, CH15	J15		1.820.813.00
			4	2	45	4				ERASE HEAD, CH15	J36		
ERAHO-16			2	1	2	2				ERASE HEAD, CH 09 TO 16	P02		
			4	2	20	15				HF-DRIVER, CH16	J20		1.820.813.00
			4	2	50	4				ERASE HEAD, CH16	J41		
ERAHO-17			2	1	3	24				ERASE HEAD, CH 17 TO 24	P03		
			5	1	5	15				HF-DRIVER, CH17	J05		1.820.813.00
			5	1	35	4				ERASE HEAD, CH17	J26		
ERAHO-18			2	1	3	11				ERASE HEAD, CH 17 TO 24	P03		
			5	1	10	15				HF-DRIVER, CH18	J10		1.820.813.00
			5	1	40	4				ERASE HEAD, CH18	J31		
ERAHO-19			2	1	3	21				ERASE HEAD, CH 17 TO 24	P03		
			5	1	15	15				HF-DRIVER, CH19	J15		1.820.813.00
			5	1	45	4				ERASE HEAD, CH19	J36		

```
*    WILLI STUDER AG    *    S I G N A L    W I R E    L I S T              * 89/07/20  *   9:25  *  P A G E 147   *
*                            * TAPE TRANSPORT & AUDIO MCH *                  * 89/04/19 - 00                        *
```

SIGNAL NAME	COLOR	MI	ASY	GRP	ELM	PNT	S	LV	TYPE	DESCRIPTION OF ELEMENT		REMARK	ELEMENT NR.
ERAHO-20			2	1	3	8				ERASE HEAD, CH 17 TO 24	P03		
			5	1	20	15				HF-DRIVER, CH20	J20		1.820.813.00
			5	1	50	4				ERASE HEAD, CH20	J41		
ERAHO-21			2	1	3	18				ERASE HEAD, CH 17 TO 24	P03		
			5	2	5	15				HF-DRIVER, CH21	J05		1.820.813.00
			5	2	35	4				ERASE HEAD, CH21	J26		
ERAHO-22			2	1	3	5				ERASE HEAD, CH 17 TO 24	P03		
			5	2	10	15				HF-DRIVER, CH22	J10		1.820.813.00
			5	2	40	4				ERASE HEAD, CH22	J31		
ERAHO-23			2	1	3	15				ERASE HEAD, CH 17 TO 24	P03		
			5	2	15	15				HF-DRIVER, CH23	J15		1.820.813.00
			5	2	45	4				ERASE HEAD, CH23	J36		
ERAHO-24			2	1	3	2				ERASE HEAD, CH 17 TO 24	P03		
			5	2	20	15				HF-DRIVER, CH24	J20		1.820.813.00
			5	2	50	4				ERASE HEAD, CH24	J41		
FAD1			1	23	8	11			B	CONN. PARALLEL REMOTE CONTROL	J07		
			1	25	3	11			B	CONN. PARALLEL REMOTE CONTROL	J03		
			1	27	4	21				TO CONN. PARALLEL REMOTE CONTR.	P04		
FAD2			1	23	8	12			B	CONN. PARALLEL REMOTE CONTROL	J07		
			1	25	3	12			B	CONN. PARALLEL REMOTE CONTROL	J03		
			1	27	4	23				TO CONN. PARALLEL REMOTE CONTR.	P04		
FRMGND			1	20	31	1				TO SMPTE/EBU CONNECTOR	P21		
			1	20	31	8				TO SMPTE/EBU CONNECTOR	P21		
			1	20	50	1				SMPTE/EBU INTERFACE	J11		1.820.751.00
			1	20	50	8				SMPTE/EBU INTERFACE	J11		1.820.751.00
			1	23	10	1				SERIAL REMOTE	J09		
			1	23	10	9				SERIAL REMOTE	J09		
			1	23	11	1				SERIAL REMOTE	J10		
			1	23	11	9				SERIAL REMOTE	J10		
			1	25	4	1			B	CONNECTOR SMPTE/EBU BUS	J04		
			1	25	4	9			B	CONNECTOR SMPTE/EBU BUS	J04		
			1	25	5	1			B	CONNECTOR SMPTE/EBU BUS	J05		
			1	25	5	9			B	CONNECTOR SMPTE/EBU BUS	J05		
GND			1	20	30	1				SSDA INT. SYNCHRONIZER	P20		
			1	20	30	8				SSDA INT. SYNCHRONIZER	P20		
			1	27	5	1			Y		P05		
	0		1	34	1	1			J	GROUND CONNECTION	P01		
	0		1	35	1	7			L	WIRE FIELD			
	0		1	35	1	54			L	WIRE FIELD			
	0		1	35	1	55			L	WIRE FIELD			
	0		1	35	62	1			J	TO GRP34, ELM01	J06		
	0		1	38	5	1			L	GROUND CONNECTION (WIRE FIELD)			
			2	2	2	1				OUTPUT	P01		
			2	2	2	14				OUTPUT	P01		
			2	3	2	1				OUTPUT	P01		
			2	3	2	14				OUTPUT	P01		
			2	4	2	1				OUTPUT	P01		

```
*    WILLI STUDER AG    *    S I G N A L    W I R E    L I S T              * 89/07/20  *   9:25  *  P A G E 148   *
*                            * TAPE TRANSPORT & AUDIO MCH *                  * 89/04/19 - 00                        *
```

SIGNAL NAME	COLOR	MI	ASY	GRP	ELM	PNT	S	LV	TYPE	DESCRIPTION OF ELEMENT		REMARK	ELEMENT NR.
<<-- CONT.OF			2	4	2	14				OUTPUT	P01		
GND	0		2	5	1	1			L				
	0		2	5	1	2			L				
	0		2	5	1	3			L				
			2	5	1	4							
			3	3	1	2				SUPPLY PREAMPLIFIER CH 1 TO 8	J01		
			3	3	2	2			BX	SUPPLY ASY03, GRP01	J02		
			3	3	3	2			BX	SUPPLY ASY03, GRP02	J03		
			3	3	4	2			BX	SUPPLY CONNECTOR	J04		
			3	3	5	2			BX	SUPPLY ASY03, GRP04 (NRS OPTION)	J05		
			3	4	10	2			AX	TO GRP03, ELM05	P10		
			4	3	1	2				SUPPLY PREAMPLIFIER CH17 TO 24	J01		
			5	3	1	2				SUPPLY PREAMPLIFIER CH 9 TO 16	J01		
	5-4		7	1	1	3			J	POWER INPUT	P01		54.42.0026
	5-4		7	1	2	3			J	POWER OUTPUT	J01		54.42.0200
	5-4		7	13	1	1			J				
	5-4		7	13	1	2			J				
HEADSELE			1	22	25	6B				FLOPPY DISK CONTROLLER	J10		1.820.726.00
			1	22	26	32				FLOPPY DISK CONNECTOR	P13		1.820.000.00
INDEX			1	22	25	18B				FLOPPY DISK CONTROLLER	J10		1.820.726.00
			1	22	26	8				FLOPPY DISK CONNECTOR	P13		1.820.000.00
INPAD-01			3	1	1	7				LINE AMPLIFIER, CH 1	J01		1.820.715.00
			3	1	2	11B				CONTROLLER INTERNAL NRS CH 1	J02		1.820.815.00
INPAD-02			3	1	6	7				LINE AMPLIFIER, CH 2	J06		1.820.715.00
			3	1	7	11B				CONTROLLER INTERNAL NRS CH 2	J07		1.820.815.00
INPAD-03			3	1	11	7				LINE AMPLIFIER, CH 3	J11		1.820.715.00
			3	1	12	11B				CONTROLLER INTERNAL NRS CH 3	J12		1.820.815.00
INPAD-04			3	1	16	7				LINE AMPLIFIER, CH 4	J16		1.820.715.00
			3	1	17	11B				CONTROLLER INTERNAL NRS CH 4	J17		1.820.815.00
INPAD-05			3	2	1	7				LINE AMPLIFIER, CH 5	J01		1.820.715.00
			3	2	2	11B				CONTROLLER INTERNAL NRS CH 5	J02		1.820.815.00
INPAD-06			3	2	6	7				LINE AMPLIFIER, CH 6	J06		1.820.715.00
			3	2	7	11B				CONTROLLER INTERNAL NRS CH 6	J07		1.820.815.00
INPAD-07			3	2	11	7				LINE AMPLIFIER, CH 7	J11		1.820.715.00
			3	2	12	11B				CONTROLLER INTERNAL NRS CH 7	J12		1.820.815.00
INPAD-08			3	2	16	7				LINE AMPLIFIER, CH 8	J16		1.820.715.00
			3	2	17	11B				CONTROLLER INTERNAL NRS CH 8	J17		1.820.815.00
INPAD-09			4	1	1	7				LINE AMPLIFIER, CH 9	J01		1.820.715.00
			4	1	2	11B				CONTROLLER INTERNAL NRS CH 9	J02		1.820.815.00
INPAD-10			4	1	6	7				LINE AMPLIFIER, CH10	J06		1.820.715.00
			4	1	7	11B				CONTROLLER INTERNAL NRS CH10	J07		1.820.815.00

```
*****************************************************************************************************************************
*    WILLI STUDER AG    *    S I G N A L    W I R E    L I S T                 * 89/07/20 *   9:25 *   P A G E 149    *
*****************************************************************************************************************************
*                          * TAPE TRANSPORT & AUDIO MCH *                      * 89/04/19 - 00                            *
*****************************************************************************************************************************
```

SIGNAL NAME	COLOR	MI	ASY	GRP	ELM	PNT	S	LV	TYPE	DESCRIPTION OF ELEMENT		REMARK	ELEMENT NR.
INPAD-11			4	1	11	7				LINE AMPLIFIER, CH11	J11		1.820.715.00
			4	1	12	11B				CONTROLLER INTERNAL NRS CH11	J12		1.820.815.00
INPAD-12			4	1	16	7				LINE AMPLIFIER, CH12	J16		1.820.715.00
			4	1	17	11B				CONTROLLER INTERNAL NRS CH12	J17		1.820.815.00
INPAD-13			4	2	1	7				LINE AMPLIFIER, CH13	J01		1.820.715.00
			4	2	2	11B				CONTROLLER INTERNAL NRS CH13	J02		1.820.815.00
INPAD-14			4	2	6	7				LINE AMPLIFIER, CH14	J06		1.820.715.00
			4	2	7	11B				CONTROLLER INTERNAL NRS CH14	J07		1.820.815.00
INPAD-15			4	2	11	7				LINE AMPLIFIER, CH15	J11		1.820.715.00
			4	2	12	11B				CONTROLLER INTERNAL NRS CH15	J12		1.820.815.00
INPAD-16			4	2	16	7				LINE AMPLIFIER, CH16	J16		1.820.715.00
			4	2	17	11B				CONTROLLER INTERNAL NRS CH16	J17		1.820.815.00
INPAD-17			5	1	1	7				LINE AMPLIFIER, CH17	J01		1.820.715.00
			5	1	2	11B				CONTROLLER INTERNAL NRS CH17	J02		1.820.815.00
INPAD-18			5	1	6	7				LINE AMPLIFIER, CH18	J06		1.820.715.00
			5	1	7	11B				CONTROLLER INTERNAL NRS CH18	J07		1.820.815.00
INPAD-19			5	1	11	7				LINE AMPLIFIER, CH19	J11		1.820.715.00
			5	1	12	11B				CONTROLLER INTERNAL NRS CH19	J12		1.820.815.00
INPAD-20			5	1	16	7				LINE AMPLIFIER, CH20	J16		1.820.715.00
			5	1	17	11B				CONTROLLER INTERNAL NRS CH20	J17		1.820.815.00
INPAD-21			5	2	1	7				LINE AMPLIFIER, CH21	J01		1.820.715.00
			5	2	2	11B				CONTROLLER INTERNAL NRS CH21	J02		1.820.815.00
INPAD-22			5	2	6	7				LINE AMPLIFIER, CH22	J06		1.820.715.00
			5	2	7	11B				CONTROLLER INTERNAL NRS CH22	J07		1.820.815.00
INPAD-23			5	2	11	7				LINE AMPLIFIER, CH23	J11		1.820.715.00
			5	2	12	11B				CONTROLLER INTERNAL NRS CH23	J12		1.820.815.00
INPAD-24			5	2	16	7				LINE AMPLIFIER, CH24	J16		1.820.715.00
			5	2	17	11B				CONTROLLER INTERNAL NRS CH24	J17		1.820.815.00
INPDI-01			3	1	1	6				LINE AMPLIFIER, CH 1	J01		1.820.715.00
			3	1	2	11A				CONTROLLER INTERNAL NRS CH 1	J02		1.820.815.00
INPDI-02			3	1	6	6				LINE AMPLIFIER, CH 2	J06		1.820.715.00
			3	1	7	11A				CONTROLLER INTERNAL NRS CH 2	J07		1.820.815.00
INPDI-03			3	1	11	6				LINE AMPLIFIER, CH 3	J11		1.820.715.00
			3	1	12	11A				CONTROLLER INTERNAL NRS CH 3	J12		1.820.815.00
INPDI-04			3	1	16	6				LINE AMPLIFIER, CH 4	J16		1.820.715.00
			3	1	17	11A				CONTROLLER INTERNAL NRS CH 4	J17		1.820.815.00
INPDI-05			3	2	1	6				LINE AMPLIFIER, CH 5	J01		1.820.715.00
			3	2	2	11A				CONTROLLER INTERNAL NRS CH 5	J02		1.820.815.00

```
*****************************************************************************************************************************
*   WILLI STUDER AG   *    S I G N A L    W I R E    L I S T              * 89/07/20  *  9:25  *  P A G E 150   *
*****************************************************************************************************************************
*                         * TAPE TRANSPORT & AUDIO MCH *                  * 89/04/19 - 00                          *
*****************************************************************************************************************************
```

SIGNAL NAME	COLOR	MI	ASY	GRP	ELM	PNT	S	LV	TYPE	DESCRIPTION OF ELEMENT		REMARK	ELEMENT NR.
INPDI-06			3	2	6	6				LINE AMPLIFIER, CH 6	J06		1.820.715.00
			3	2	7	11A				CONTROLLER INTERNAL NRS CH 6	J07		1.820.815.00
INPDI-07			3	2	11	6				LINE AMPLIFIER, CH 7	J11		1.820.715.00
			3	2	12	11A				CONTROLLER INTERNAL NRS CH 7	J12		1.820.815.00
INPDI-08			3	2	16	6				LINE AMPLIFIER, CH 8	J16		1.820.715.00
			3	2	17	11A				CONTROLLER INTERNAL NRS CH 8	J17		1.820.815.00
INPDI-09			4	1	1	6				LINE AMPLIFIER, CH 9	J01		1.820.715.00
			4	1	2	11A				CONTROLLER INTERNAL NRS CH 9	J02		1.820.815.00
INPDI-10			4	1	6	6				LINE AMPLIFIER, CH10	J06		1.820.715.00
			4	1	7	11A				CONTROLLER INTERNAL NRS CH10	J07		1.820.815.00
INPDI-11			4	1	11	6				LINE AMPLIFIER, CH11	J11		1.820.715.00
			4	1	12	11A				CONTROLLER INTERNAL NRS CH11	J12		1.820.815.00
INPDI-12			4	1	16	6				LINE AMPLIFIER, CH12	J16		1.820.715.00
			4	1	17	11A				CONTROLLER INTERNAL NRS CH12	J17		1.820.815.00
INPDI-13			4	2	1	6				LINE AMPLIFIER, CH13	J01		1.820.715.00
			4	2	2	11A				CONTROLLER INTERNAL NRS CH13	J02		1.820.815.00
INPDI-14			4	2	6	6				LINE AMPLIFIER, CH14	J06		1.820.715.00
			4	2	7	11A				CONTROLLER INTERNAL NRS CH14	J07		1.820.815.00
INPDI-15			4	2	11	6				LINE AMPLIFIER, CH15	J11		1.820.715.00
			4	2	12	11A				CONTROLLER INTERNAL NRS CH15	J12		1.820.815.00
INPDI-16			4	2	16	6				LINE AMPLIFIER, CH16	J16		1.820.715.00
			4	2	17	11A				CONTROLLER INTERNAL NRS CH16	J17		1.820.815.00
INPDI-17			5	1	1	6				LINE AMPLIFIER, CH17	J01		1.820.715.00
			5	1	2	11A				CONTROLLER INTERNAL NRS CH17	J02		1.820.815.00
INPDI-18			5	1	6	6				LINE AMPLIFIER, CH18	J06		1.820.715.00
			5	1	7	11A				CONTROLLER INTERNAL NRS CH18	J07		1.820.815.00
INPDI-19			5	1	11	6				LINE AMPLIFIER, CH19	J11		1.820.715.00
			5	1	12	11A				CONTROLLER INTERNAL NRS CH19	J12		1.820.815.00
INPDI-20			5	1	16	6				LINE AMPLIFIER, CH20	J16		1.820.715.00
			5	1	17	11A				CONTROLLER INTERNAL NRS CH20	J17		1.820.815.00
INPDI-21			5	2	1	6				LINE AMPLIFIER, CH21	J01		1.820.715.00
			5	2	2	11A				CONTROLLER INTERNAL NRS CH21	J02		1.820.815.00
INPDI-22			5	2	6	6				LINE AMPLIFIER, CH22	J06		1.820.715.00
			5	2	7	11A				CONTROLLER INTERNAL NRS CH22	J07		1.820.815.00
INPDI-23			5	2	11	6				LINE AMPLIFIER, CH23	J11		1.820.715.00
			5	2	12	11A				CONTROLLER INTERNAL NRS CH23	J12		1.820.815.00
INPDI-24			5	2	16	6				LINE AMPLIFIER, CH24	J16		1.820.715.00
			5	2	17	11A				CONTROLLER INTERNAL NRS CH24	J17		1.820.815.00

SIGNAL NAME	COLOR	MI	ASY	GRP	ELM	PNT	S	LV	TYPE	DESCRIPTION OF ELEMENT		REMARK	ELEMENT NR.
INUSE			1	22	25	21B				FLOPPY DISK CONTROLLER	J10		1.820.726.00
			1	22	26	4				FLOPPY DISK CONNECTOR	P13		1.820.000.00
IR-REFEX			1	23	8	13			B	CONN. PARALLEL REMOTE CONTROL	J07		
			1	25	2	13			B	CONNECTOR SYNCHRONIZER CONTROL	J02		
			1	25	3	13			B	CONN. PARALLEL REMOTE CONTROL	J03		
			1	27	3	25				TO GRP25, ELM02 (SYNCHRONIZER)	P03		
			1	27	4	25				TO CONN. PARALLEL REMOTE CONTR.	P04		
K-BRAKEL			1	20	43	31A				TAPE DECK PERIPHERY CONTR.	J04		1.820.762.00
	1		1	20	63	1			U	WIRE FIELD (TO BRAKE SOLENOIDS)			
	1		1	20	72	2			F	TO BRAKE SOLENOID, LEFT	P25		
	1		1	40	1	2			M	BRAKE SOLENOID			
K-BRAKER			1	20	43	32A				TAPE DECK PERIPHERY CONTR.	J04		1.820.762.00
	4		1	20	63	2			U	WIRE FIELD (TO BRAKE SOLENOIDS)			
	4		1	20	73	2			F	TO BRAKE SOLENOID, RIGHT	P26		
	4		1	41	1	2			M	BRAKE SOLENOID			
K-REC-01			3	1	3	4				REPRODUCE AMPLIFIER, CH 1	J03		1.820.710.00
			3	1	4	4				RECORD AMPLIFIER, CH 1	J04		1.820.811.00
			3	1	5	2				HF-DRIVER, CH 1	J05		1.820.813.00
K-REC-02			3	1	8	4				REPRODUCE AMPLIFIER, CH 2	J08		1.820.710.00
			3	1	9	4				RECORD AMPLIFIER, CH 2	J09		1.820.811.00
			3	1	10	2				HF-DRIVER, CH 2	J10		1.820.813.00
K-REC-03			3	1	13	4				REPRODUCE AMPLIFIER, CH 3	J13		1.820.710.00
			3	1	14	4				RECORD AMPLIFIER, CH 3	J14		1.820.811.00
			3	1	15	2				HF-DRIVER, CH 3	J15		1.820.813.00
K-REC-04			3	1	18	4				REPRODUCE AMPLIFIER, CH 4	J18		1.820.710.00
			3	1	19	4				RECORD AMPLIFIER, CH 4	J19		1.820.811.00
			3	1	20	2				HF-DRIVER, CH 4	J20		1.820.813.00
K-REC-05			3	2	3	4				REPRODUCE AMPLIFIER, CH 5	J03		1.820.710.00
			3	2	4	4				RECORD AMPLIFIER, CH 5	J04		1.820.811.00
			3	2	5	2				HF-DRIVER, CH 5	J05		1.820.813.00
K-REC-06			3	2	8	4				REPRODUCE AMPLIFIER, CH 6	J08		1.820.710.00
			3	2	9	4				RECORD AMPLIFIER, CH 6	J09		1.820.811.00
			3	2	10	2				HF-DRIVER, CH 6	J10		1.820.813.00
K-REC-07			3	2	13	4				REPRODUCE AMPLIFIER, CH 7	J13		1.820.710.00
			3	2	14	4				RECORD AMPLIFIER, CH 7	J14		1.820.811.00
			3	2	15	2				HF-DRIVER, CH 7	J15		1.820.813.00
K-REC-08			3	2	18	4				REPRODUCE AMPLIFIER, CH 8	J18		1.820.710.00
			3	2	19	4				RECORD AMPLIFIER, CH 8	J19		1.820.811.00
			3	2	20	2				HF-DRIVER, CH 8	J20		1.820.813.00
K-REC-09			4	1	3	4				REPRODUCE AMPLIFIER, CH 9	J03		1.820.710.00
			4	1	4	4				RECORD AMPLIFIER, CH 9	J04		1.820.811.00
			4	1	5	2				HF-DRIVER, CH 9	J05		1.820.813.00

SIGNAL NAME	COLOR	MI	ASY	GRP	ELM	PNT	S	LV	TYPE	DESCRIPTION OF ELEMENT		REMARK	ELEMENT NR.
K-REC-10			4	1	8	4				REPRODUCE AMPLIFIER, CH10	J08		1.820.710.00
			4	1	9	4				RECORD AMPLIFIER, CH10	J09		1.820.811.00
			4	1	10	2				HF-DRIVER, CH10	J10		1.820.813.00
K-REC-11			4	1	13	4				REPRODUCE AMPLIFIER, CH11	J13		1.820.710.00
			4	1	14	4				RECORD AMPLIFIER, CH11	J14		1.820.811.00
			4	1	15	2				HF-DRIVER, CH11	J15		1.820.813.00
K-REC-12			4	1	18	4				REPRODUCE AMPLIFIER, CH12	J18		1.820.710.00
			4	1	19	4				RECORD AMPLIFIER, CH12	J19		1.820.811.00
			4	1	20	2				HF-DRIVER, CH12	J20		1.820.813.00
K-REC-13			4	2	3	4				REPRODUCE AMPLIFIER, CH13	J03		1.820.710.00
			4	2	4	4				RECORD AMPLIFIER, CH13	J04		1.820.811.00
			4	2	5	2				HF-DRIVER, CH13	J05		1.820.813.00
K-REC-14			4	2	8	4				REPRODUCE AMPLIFIER, CH14	J08		1.820.710.00
			4	2	9	4				RECORD AMPLIFIER, CH14	J09		1.820.811.00
			4	2	10	2				HF-DRIVER, CH14	J10		1.820.813.00
K-REC-15			4	2	13	4				REPRODUCE AMPLIFIER, CH15	J13		1.820.710.00
			4	2	14	4				RECORD AMPLIFIER, CH15	J14		1.820.811.00
			4	2	15	2				HF-DRIVER, CH15	J15		1.820.813.00
K-REC-16			4	2	18	4				REPRODUCE AMPLIFIER, CH16	J18		1.820.710.00
			4	2	19	4				RECORD AMPLIFIER, CH16	J19		1.820.811.00
			4	2	20	2				HF-DRIVER, CH16	J20		1.820.813.00
K-REC-17			5	1	3	4				REPRODUCE AMPLIFIER, CH17	J03		1.820.710.00
			5	1	4	4				RECORD AMPLIFIER, CH17	J04		1.820.811.00
			5	1	5	2				HF-DRIVER, CH17	J05		1.820.813.00
K-REC-18			5	1	8	4				REPRODUCE AMPLIFIER, CH18	J08		1.820.710.00
			5	1	9	4				RECORD AMPLIFIER, CH18	J09		1.820.811.00
			5	1	10	2				HF-DRIVER, CH18	J10		1.820.813.00
K-REC-19			5	1	13	4				REPRODUCE AMPLIFIER, CH19	J13		1.820.710.00
			5	1	14	4				RECORD AMPLIFIER, CH19	J14		1.820.811.00
			5	1	15	2				HF-DRIVER, CH19	J15		1.820.813.00
K-REC-20			5	1	18	4				REPRODUCE AMPLIFIER, CH20	J18		1.820.710.00
			5	1	19	4				RECORD AMPLIFIER, CH20	J19		1.820.811.00
			5	1	20	2				HF-DRIVER, CH20	J20		1.820.813.00
K-REC-21			5	2	3	4				REPRODUCE AMPLIFIER, CH21	J03		1.820.710.00
			5	2	4	4				RECORD AMPLIFIER, CH21	J04		1.820.811.00
			5	2	5	2				HF-DRIVER, CH21	J05		1.820.813.00
K-REC-22			5	2	8	4				REPRODUCE AMPLIFIER, CH22	J08		1.820.710.00
			5	2	9	4				RECORD AMPLIFIER, CH22	J09		1.820.811.00
			5	2	10	2				HF-DRIVER, CH22	J10		1.820.813.00
K-REC-23			5	2	13	4				REPRODUCE AMPLIFIER, CH23	J13		1.820.710.00
			5	2	14	4				RECORD AMPLIFIER, CH23	J14		1.820.811.00
			5	2	15	2				HF-DRIVER, CH23	J15		1.820.813.00

* WILLI STUDER AG * S I G N A L W I R E L I S T * 89/07/20 * 9:25 * P A G E 153 *
* * TAPE TRANSPORT & AUDIO MCH * * 89/04/19 - 00 *

SIGNAL NAME	COLOR	MI	ASY	GRP	ELM	PNT	S	LV	TYPE	DESCRIPTION OF ELEMENT		REMARK	ELEMENT NR.
K-REC-24			5	2	18	4				REPRODUCE AMPLIFIER, CH24	J18		1.820.710.00
			5	2	19	4				RECORD AMPLIFIER, CH24	J19		1.820.811.00
			5	2	20	2				HF-DRIVER, CH24	J20		1.820.813.00
K-START	0		7	9	4	9			L	INPUT START RELAIS	K01		56.02.0105
	0		7	14	1	6			BX				54.25.0308
KCLN0-A			6	5	2	24				KEYBOARD	P02		
			6	9	1	24					P01		
KCLN0-C			6	6	2	24				KEYBOARD	P02		
			6	10	1	24					P01		
KCLN0-E			6	7	2	24				KEYBOARD	P02		
			6	11	1	24					P01		
KCLN0-G			6	8	2	24				KEYBOARD MASTER	J01		
			6	12	1	24					P01		
KCLN1-A			6	5	2	22				KEYBOARD	P02		
			6	9	1	22					P01		
KCLN1-C			6	6	2	22				KEYBOARD	P02		
			6	10	1	22					P01		
KCLN1-E			6	7	2	22				KEYBOARD	P02		
			6	11	1	22					P01		
KCLN1-G			6	8	2	22				KEYBOARD MASTER	J01		
			6	12	1	22					P01		
KCLN2-A			6	5	2	20				KEYBOARD	P02		
			6	9	1	20					P01		
KCLN2-C			6	6	2	20				KEYBOARD	P02		
			6	10	1	20					P01		
KCLN2-E			6	7	2	20				KEYBOARD	P02		
			6	11	1	20					P01		
KCLN2-G			6	8	2	20				KEYBOARD MASTER	J01		
			6	12	1	20					P01		
KCLN3-A			6	5	2	18				KEYBOARD	P02		
			6	9	1	18					P01		
KCLN3-C			6	6	2	18				KEYBOARD	P02		
			6	10	1	18					P01		
KCLN3-E			6	7	2	18				KEYBOARD	P02		
			6	11	1	18					P01		
KCLN3-G			6	8	2	18				KEYBOARD MASTER	J01		
			6	12	1	18					P01		

* WILLI STUDER AG * S I G N A L W I R E L I S T * 89/07/20 * 9:25 * P A G E 154 *
* * TAPE TRANSPORT & AUDIO MCH * * 89/04/19 - 00 *

SIGNAL NAME	COLOR	MI	ASY	GRP	ELM	PNT	S	LV	TYPE	DESCRIPTION OF ELEMENT		REMARK	ELEMENT NR.
KCLN4-A			6	5	2	15				KEYBOARD	P02		
			6	9	1	15					P01		
KCLN4-C			6	6	2	15				KEYBOARD	P02		
			6	10	1	15					P01		
KCLN4-E			6	7	2	15				KEYBOARD	P02		
			6	11	1	15					P01		
KCLN4-G			6	8	2	15				KEYBOARD MASTER	J01		
			6	12	1	15					P01		
KCLN5-A			6	5	2	12				KEYBOARD	P02		
			6	9	1	12					P01		
KCLN5-C			6	6	2	12				KEYBOARD	P02		
			6	10	1	12					P01		
KCLN5-E			6	7	2	12				KEYBOARD	P02		
			6	11	1	12					P01		
KCLN5-G			6	8	2	12				KEYBOARD MASTER	J01		
			6	12	1	12					P01		
KCLN6-A			6	5	2	10				KEYBOARD	P02		
			6	9	1	10					P01		
KCLN6-C			6	6	2	10				KEYBOARD	P02		
			6	10	1	10					P01		
KCLN6-E			6	7	2	10				KEYBOARD	P02		
			6	11	1	10					P01		
KCLN6-G			6	8	2	10				KEYBOARD MASTER	J01		
			6	12	1	10					P01		
KCLN7-A			6	5	2	8				KEYBOARD	P02		
			6	9	1	8					P01		
KCLN7-C			6	6	2	8				KEYBOARD	P02		
			6	10	1	8					P01		
KCLN7-E			6	7	2	8				KEYBOARD	P02		
			6	11	1	8					P01		
KCLN7-G			6	8	2	8				KEYBOARD MASTER	J01		
			6	12	1	8					P01		
KEY/CDIR			1	25	2	8				CONNECTOR SYNCHRONIZER CONTROL	J02		
			1	27	3	15				TO GRP25, ELM02 (SYNCHRONIZER)	P03		
KRW0-A			6	5	2	29				KEYBOARD	P02		
			6	9	1	29					P01		
KRW0-C			6	6	2	29				KEYBOARD	P02		
			6	10	1	29					P01		

* WILLI STUDER AG * S I G N A L W I R E L I S T * 89/07/20 * 9:25 * P A G E 155 *
* * TAPE TRANSPORT & AUDIO MCH * * 89/04/19 - 00 *

SIGNAL NAME	COLOR	MI	ASY	GRP	ELM	PNT	S	LV	TYPE	DESCRIPTION OF ELEMENT		REMARK	ELEMENT NR.
KRW0-E			6	7	2	29				KEYBOARD	P02		
			6	11	1	29					P01		
KRW0-G			6	8	2	29				KEYBOARD MASTER	J01		
			6	12	1	29					P01		
KRW1-A			6	5	2	28				KEYBOARD	P02		
			6	9	1	28					P01		
KRW1-C			6	6	2	28				KEYBOARD	P02		
			6	10	1	28					P01		
KRW1-E			6	7	2	28				KEYBOARD	P02		
			6	11	1	28					P01		
KRW1-G			6	8	2	28				KEYBOARD MASTER	J01		
			6	12	1	28					P01		
KRW2-A			6	5	2	27				KEYBOARD	P02		
			6	9	1	27					P01		
KRW2-C			6	6	2	27				KEYBOARD	P02		
			6	10	1	27					P01		
KRW2-E			6	7	2	27				KEYBOARD	P02		
			6	11	1	27					P01		
KRW2-G			6	8	2	27				KEYBOARD MASTER	J01		
			6	12	1	27					P01		
KRW3-A			6	5	2	26				KEYBOARD	P02		
			6	9	1	26					P01		
KRW3-C			6	6	2	26				KEYBOARD	P02		
			6	10	1	26					P01		
KRW3-E			6	7	2	26				KEYBOARD	P02		
			6	11	1	26					P01		
KRW3-G			6	8	2	26				KEYBOARD MASTER	J01		
			6	12	1	26					P01		
KRW4-A			6	5	2	25				KEYBOARD	P02		
			6	9	1	25					P01		
KRW4-C			6	6	2	25				KEYBOARD	P02		
			6	10	1	25					P01		
KRW4-E			6	7	2	25				KEYBOARD	P02		
			6	11	1	25					P01		
KRW4-G			6	8	2	25				KEYBOARD MASTER	J01		
			6	12	1	25					P01		
LCU-A	2		1	23	9	14			B	LOCAL CONTROL UNIT	J08		

* WILLI STUDER AG * S I G N A L W I R E L I S T * 89/07/20 * 9:25 * P A G E 156 *
* * TAPE TRANSPORT & AUDIO MCH * * 89/04/19 - 00 *

SIGNAL NAME	COLOR	MI	ASY	GRP	ELM	PNT	S	LV	TYPE	DESCRIPTION OF ELEMENT		REMARK	ELEMENT NR.
LCU-B	3		1	23	9	7			B	LOCAL CONTROL UNIT	J08		
LDCLN0-A			6	5	2	23				KEYBOARD	P02		
			6	9	1	23					P01		
LDCLN0-C			6	6	2	23				KEYBOARD	P02		
			6	10	1	23					P01		
LDCLN0-E			6	7	2	23				KEYBOARD	P02		
			6	11	1	23					P01		
LDCLN0-G			6	8	2	23				KEYBOARD MASTER	J01		
			6	12	1	23					P01		
LDCLN1-A			6	5	2	21				KEYBOARD	P02		
			6	9	1	21					P01		
LDCLN1-C			6	6	2	21				KEYBOARD	P02		
			6	10	1	21					P01		
LDCLN1-E			6	7	2	21				KEYBOARD	P02		
			6	11	1	21					P01		
LDCLN1-G			6	8	2	21				KEYBOARD MASTER	J01		
			6	12	1	21					P01		
LDCLN2-A			6	5	2	19				KEYBOARD	P02		
			6	9	1	19					P01		
LDCLN2-C			6	6	2	19				KEYBOARD	P02		
			6	10	1	19					P01		
LDCLN2-E			6	7	2	19				KEYBOARD	P02		
			6	11	1	19					P01		
LDCLN2-G			6	8	2	19				KEYBOARD MASTER	J01		
			6	12	1	19					P01		
LDCLN3-A			6	5	2	17				KEYBOARD	P02		
			6	9	1	17					P01		
LDCLN3-C			6	6	2	17				KEYBOARD	P02		
			6	10	1	17					P01		
LDCLN3-E			6	7	2	17				KEYBOARD	P02		
			6	11	1	17					P01		
LDCLN3-G			6	8	2	17				KEYBOARD MASTER	J01		
			6	12	1	17					P01		
LDCLN4-A			6	5	2	13				KEYBOARD	P02		
			6	9	1	13					P01		
LDCLN4-C			6	6	2	13				KEYBOARD	P02		
			6	10	1	13					P01		

* WILLI STUDER AG * S I G N A L W I R E L I S T * 89/07/20 * 9:25 * P A G E 157 *

* * TAPE TRANSPORT & AUDIO MCH * * 89/04/19 - 00 *

SIGNAL NAME	COLOR	MI	ASY	GRP	ELM	PNT	S	LV	TYPE	DESCRIPTION OF ELEMENT		REMARK	ELEMENT NR.
LDCLN4-E			6	7	2	13				KEYBOARD	P02		
			6	11	1	13					P01		
LDCLN4-G			6	8	2	13				KEYBOARD MASTER	J01		
			6	12	1	13					P01		
LDCLN5-A			6	5	2	11				KEYBOARD	P02		
			6	9	1	11					P01		
LDCLN5-C			6	6	2	11				KEYBOARD	P02		
			6	10	1	11					P01		
LDCLN5-E			6	7	2	11				KEYBOARD	P02		
			6	11	1	11					P01		
LDCLN5-G			6	8	2	11				KEYBOARD MASTER	J01		
			6	12	1	11					P01		
LDCLN6-A			6	5	2	9				KEYBOARD	P02		
			6	9	1	9					P01		
LDCLN6-C			6	6	2	9				KEYBOARD	P02		
			6	10	1	9					P01		
LDCLN6-E			6	7	2	9				KEYBOARD	P02		
			6	11	1	9					P01		
LDCLN6-G			6	8	2	9				KEYBOARD MASTER	J01		
			6	12	1	9					P01		
LDCLN7-A			6	5	2	7				KEYBOARD	P02		
			6	9	1	7					P01		
LDCLN7-C			6	6	2	7				KEYBOARD	P02		
			6	10	1	7					P01		
LDCLN7-E			6	7	2	7				KEYBOARD	P02		
			6	11	1	7					P01		
LDCLN7-G			6	8	2	7				KEYBOARD MASTER	J01		
			6	12	1	7					P01		
LDRW0-A			6	5	2	1				KEYBOARD	P02		
			6	9	1	1					P01		
LDRW0-C			6	6	2	1				KEYBOARD	P02		
			6	10	1	1					P01		
LDRW0-E			6	7	2	1				KEYBOARD	P02		
			6	11	1	1					P01		
LDRW0-G			6	8	2	1				KEYBOARD MASTER	J01		
			6	12	1	1					P01		
LDRW1-A			6	5	2	2				KEYBOARD	P02		
			6	9	1	2					P01		

```
*****************************************************************************************************************************
*    WILLI STUDER AG   *    S I G N A L     W I R E     L I S T              * 89/07/20  *   9:25  *   P A G E 158   *
*****************************************************************************************************************************
*                          * TAPE TRANSPORT & AUDIO MCH *                     * 89/04/19 - 00                              *
*****************************************************************************************************************************
```

SIGNAL NAME	COLOR	MI	ASY	GRP	ELM	PNT	S	LV	TYPE	DESCRIPTION OF ELEMENT		REMARK	ELEMENT NR.
LDRW1-C			6	6	2	2				KEYBOARD	P02		
			6	10	1	2					P01		
LDRW1-E			6	7	2	2				KEYBOARD	P02		
			6	11	1	2					P01		
LDRW1-G			6	8	2	2				KEYBOARD MASTER	J01		
			6	12	1	2					P01		
LDRW2-A			6	5	2	3				KEYBOARD	P02		
			6	9	1	3					P01		
LDRW2-C			6	6	2	3				KEYBOARD	P02		
			6	10	1	3					P01		
LDRW2-E			6	7	2	3				KEYBOARD	P02		
			6	11	1	3					P01		
LDRW2-G			6	8	2	3				KEYBOARD MASTER	J01		
			6	12	1	3					P01		
LDRW3-A			6	5	2	4				KEYBOARD	P02		
			6	9	1	4					P01		
LDRW3-C			6	6	2	4				KEYBOARD	P02		
			6	10	1	4					P01		
LDRW3-E			6	7	2	4				KEYBOARD	P02		
			6	11	1	4					P01		
LDRW3-G			6	8	2	4				KEYBOARD MASTER	J01		
			6	12	1	4					P01		
LDRW4-A			6	5	2	5				KEYBOARD	P02		
			6	9	1	5					P01		
LDRW4-C			6	6	2	5				KEYBOARD	P02		
			6	10	1	5					P01		
LDRW4-E			6	7	2	5				KEYBOARD	P02		
			6	11	1	5					P01		
LDRW4-G			6	8	2	5				KEYBOARD MASTER	J01		
			6	12	1	5					P01		
LDRW5-A			6	5	2	6				KEYBOARD	P02		
			6	9	1	6					P01		
LDRW5-C			6	6	2	6				KEYBOARD	P02		
			6	10	1	6					P01		
LDRW5-E			6	7	2	6				KEYBOARD	P02		
			6	11	1	6					P01		
LDRW5-G			6	8	2	6				KEYBOARD MASTER	J01		
			6	12	1	6					P01		

* WILLI STUDER AG * S I G N A L W I R E L I S T * 89/07/20 * 9:25 * P A G E 159 *
* * TAPE TRANSPORT & AUDIO MCH * * 89/04/19 - 00 *

SIGNAL NAME	COLOR	MI	ASY	GRP	ELM	PNT	S	LV	TYPE	DESCRIPTION OF ELEMENT		REMARK	ELEMENT NR.
LINE1	1		7	1	1	1			J	POWER INPUT	P01		54.42.0026
	1		7	1	2	1			J	POWER OUTPUT	J01		54.42.0200
LINE2	6		7	1	1	2			J	POWER INPUT	P01		54.42.0026
	6		7	1	2	2			J	POWER OUTPUT	J01		54.42.0200
LINFA-01			3	1	1	14				LINE AMPLIFIER, CH 1	J01		1.820.715.00
			3	1	31	5				LINE INPUT/OUTPUT, CH 1	J22		
			3	11	9	12				LINE INPUTS, CH 1 TO 8	P01		
LINFA-02			3	1	6	14				LINE AMPLIFIER, CH 2	J06		1.820.715.00
			3	1	36	5				LINE INPUT/OUTPUT, CH 2	J27		
			3	11	9	10				LINE INPUTS, CH 1 TO 8	P01		
LINFA-03			3	1	11	14				LINE AMPLIFIER, CH 3	J11		1.820.715.00
			3	1	41	5				LINE INPUT/OUTPUT, CH 3	J32		
			3	11	9	9				LINE INPUTS, CH 1 TO 8	P01		
LINFA-04			3	1	16	14				LINE AMPLIFIER, CH 4	J16		1.820.715.00
			3	1	46	5				LINE INPUT/OUTPUT, CH 4	J37		
			3	11	9	7				LINE INPUTS, CH 1 TO 8	P01		
LINFA-05			3	2	1	14				LINE AMPLIFIER, CH 5	J01		1.820.715.00
			3	2	31	5				LINE INPUT/OUTPUT, CH 5	J22		
			3	11	9	6				LINE INPUTS, CH 1 TO 8	P01		
LINFA-06			3	2	6	14				LINE AMPLIFIER, CH 6	J06		1.820.715.00
			3	2	36	5				LINE INPUT/OUTPUT, CH 6	J27		
			3	11	9	4				LINE INPUTS, CH 1 TO 8	P01		
LINFA-07			3	2	11	14				LINE AMPLIFIER, CH 7	J11		1.820.715.00
			3	2	41	5				LINE INPUT/OUTPUT, CH 7	J32		
			3	11	9	3				LINE INPUTS, CH 1 TO 8	P01		
LINFA-08			3	2	16	14				LINE AMPLIFIER, CH 8	J16		1.820.715.00
			3	2	46	5				LINE INPUT/OUTPUT, CH 8	J37		
			3	11	9	1				LINE INPUTS, CH 1 TO 8	P01		
LINFA-09			4	1	1	14				LINE AMPLIFIER, CH 9	J01		1.820.715.00
			4	1	31	5				LINE INPUT/OUTPUT, CH 9	J22		
			4	11	9	12				LINE INPUTS, CH 9 TO 16	P01		
LINFA-10			4	1	6	14				LINE AMPLIFIER, CH10	J06		1.820.715.00
			4	1	36	5				LINE INPUT/OUTPUT, CH10	J27		
			4	11	9	10				LINE INPUTS, CH 9 TO 16	P01		
LINFA-11			4	1	11	14				LINE AMPLIFIER, CH11	J11		1.820.715.00
			4	1	41	5				LINE INPUT/OUTPUT, CH11	J32		
			4	11	9	9				LINE INPUTS, CH 9 TO 16	P01		
LINFA-12			4	1	16	14				LINE AMPLIFIER, CH12	J16		1.820.715.00
			4	1	46	5				LINE INPUT/OUTPUT, CH12	J37		
			4	11	9	7				LINE INPUTS, CH 9 TO 16	P01		

* WILLI STUDER AG * S I G N A L W I R E L I S T * 89/07/20 * 9:25 * P A G E 160 *
* * TAPE TRANSPORT & AUDIO MCH * * 89/04/19 - 00 *

SIGNAL NAME	COLOR	MI	ASY	GRP	ELM	PNT	S	LV	TYPE	DESCRIPTION OF ELEMENT		REMARK	ELEMENT NR.
LINFA-13			4	2	1	14				LINE AMPLIFIER, CH13	J01		1.820.715.00
			4	2	31	5				LINE INPUT/OUTPUT, CH13	J22		
			4	11	9	6				LINE INPUTS, CH 9 TO 16	P01		
LINFA-14			4	2	6	14				LINE AMPLIFIER, CH14	J06		1.820.715.00
			4	2	36	5				LINE INPUT/OUTPUT, CH14	J27		
			4	11	9	4				LINE INPUTS, CH 9 TO 16	P01		
LINFA-15			4	2	11	14				LINE AMPLIFIER, CH15	J11		1.820.715.00
			4	2	41	5				LINE INPUT/OUTPUT, CH15	J32		
			4	11	9	3				LINE INPUTS, CH 9 TO 16	P01		
LINFA-16			4	2	16	14				LINE AMPLIFIER, CH16	J16		1.820.715.00
			4	2	46	5				LINE INPUT/OUTPUT, CH16	J37		
			4	11	9	1				LINE INPUTS, CH 9 TO 16	P01		
LINFA-17			5	1	1	14				LINE AMPLIFIER, CH17	J01		1.820.715.00
			5	1	31	5				LINE INPUT/OUTPUT, CH17	J22		
			5	11	9	12				LINE INPUTS, CH19 TO 24	P01		
LINFA-18			5	1	6	14				LINE AMPLIFIER, CH18	J06		1.820.715.00
			5	1	36	5				LINE INPUT/OUTPUT, CH18	J27		
			5	11	9	10				LINE INPUTS, CH19 TO 24	P01		
LINFA-19			5	1	11	14				LINE AMPLIFIER, CH19	J11		1.820.715.00
			5	1	41	5				LINE INPUT/OUTPUT, CH19	J32		
			5	11	9	9				LINE INPUTS, CH19 TO 24	P01		
LINFA-20			5	1	16	14				LINE AMPLIFIER, CH20	J16		1.820.715.00
			5	1	46	5				LINE INPUT/OUTPUT, CH20	J37		
			5	11	9	7				LINE INPUTS, CH19 TO 24	P01		
LINFA-21			5	2	1	14				LINE AMPLIFIER, CH21	J01		1.820.715.00
			5	2	31	5				LINE INPUT/OUTPUT, CH21	J22		
			5	11	9	6				LINE INPUTS, CH19 TO 24	P01		
LINFA-22			5	2	6	14				LINE AMPLIFIER, CH22	J06		1.820.715.00
			5	2	36	5				LINE INPUT/OUTPUT, CH22	J27		
			5	11	9	4				LINE INPUTS, CH19 TO 24	P01		
LINFA-23			5	2	11	14				LINE AMPLIFIER, CH23	J11		1.820.715.00
			5	2	41	5				LINE INPUT/OUTPUT, CH23	J32		
			5	11	9	3				LINE INPUTS, CH19 TO 24	P01		
LINFA-24			5	2	16	14				LINE AMPLIFIER, CH24	J16		1.820.715.00
			5	2	46	5				LINE INPUT/OUTPUT, CH24	J37		
			5	11	9	1				LINE INPUTS, CH19 TO 24	P01		
LINFB-01			3	1	1	15				LINE AMPLIFIER, CH 1	J01		1.820.715.00
			3	1	31	6				LINE INPUT/OUTPUT, CH 1	J22		
			3	11	9	25				LINE INPUTS, CH 1 TO 8	P01		
LINFB-02			3	1	6	15				LINE AMPLIFIER, CH 2	J06		1.820.715.00
			3	1	36	6				LINE INPUT/OUTPUT, CH 2	J27		
			3	11	9	23				LINE INPUTS, CH 1 TO 8	P01		

```
*****************************************************************************************************************************
*   WILLI STUDER AG   *   S I G N A L   W I R E   L I S T          * 89/07/20 *  9:25 *  P A G E 161   *
*****************************************************************************************************************************
*                     * TAPE TRANSPORT & AUDIO MCH *                 * 89/04/19 - 00                                        *
*****************************************************************************************************************************
```

SIGNAL NAME	COLOR	MI	ASY	GRP	ELM	PNT	S	LV	TYPE	DESCRIPTION OF ELEMENT		REMARK	ELEMENT NR.
LINFB-03			3	1	11	15				LINE AMPLIFIER, CH 3	J11		1.820.715.00
			3	1	41	6				LINE INPUT/OUTPUT, CH 3	J32		
			3	11	9	22				LINE INPUTS, CH 1 TO 8	P01		
LINFB-04			3	1	16	15				LINE AMPLIFIER, CH 4	J16		1.820.715.00
			3	1	46	6				LINE INPUT/OUTPUT, CH 4	J37		
			3	11	9	20				LINE INPUTS, CH 1 TO 8	P01		
LINFB-05			3	2	1	15				LINE AMPLIFIER, CH 5	J01		1.820.715.00
			3	2	31	6				LINE INPUT/OUTPUT, CH 5	J22		
			3	11	9	19				LINE INPUTS, CH 1 TO 8	P01		
LINFB-06			3	2	6	15				LINE AMPLIFIER, CH 6	J06		1.820.715.00
			3	2	36	6				LINE INPUT/OUTPUT, CH 6	J27		
			3	11	9	17				LINE INPUTS, CH 1 TO 8	P01		
LINFB-07			3	2	11	15				LINE AMPLIFIER, CH 7	J11		1.820.715.00
			3	2	41	6				LINE INPUT/OUTPUT, CH 7	J32		
			3	11	9	16				LINE INPUTS, CH 1 TO 8	P01		
LINFB-08			3	2	16	15				LINE AMPLIFIER, CH 8	J16		1.820.715.00
			3	2	46	6				LINE INPUT/OUTPUT, CH 8	J37		
			3	11	9	14				LINE INPUTS, CH 1 TO 8	P01		
LINFB-09			4	1	1	15				LINE AMPLIFIER, CH 9	J01		1.820.715.00
			4	1	31	6				LINE INPUT/OUTPUT, CH 9	J22		
			4	11	9	25				LINE INPUTS, CH 9 TO 16	P01		
LINFB-10			4	1	6	15				LINE AMPLIFIER, CH10	J06		1.820.715.00
			4	1	36	6				LINE INPUT/OUTPUT, CH10	J27		
			4	11	9	23				LINE INPUTS, CH 9 TO 16	P01		
LINFB-11			4	1	11	15				LINE AMPLIFIER, CH11	J11		1.820.715.00
			4	1	41	6				LINE INPUT/OUTPUT, CH11	J32		
			4	11	9	22				LINE INPUTS, CH 9 TO 16	P01		
LINFB-12			4	1	16	15				LINE AMPLIFIER, CH12	J16		1.820.715.00
			4	1	46	6				LINE INPUT/OUTPUT, CH12	J37		
			4	11	9	20				LINE INPUTS, CH 9 TO 16	P01		
LINFB-13			4	2	1	15				LINE AMPLIFIER, CH13	J01		1.820.715.00
			4	2	31	6				LINE INPUT/OUTPUT, CH13	J22		
			4	11	9	19				LINE INPUTS, CH 9 TO 16	P01		
LINFB-14			4	2	6	15				LINE AMPLIFIER, CH14	J06		1.820.715.00
			4	2	36	6				LINE INPUT/OUTPUT, CH14	J27		
			4	11	9	17				LINE INPUTS, CH 9 TO 16	P01		
LINFB-15			4	2	11	15				LINE AMPLIFIER, CH15	J11		1.820.715.00
			4	2	41	6				LINE INPUT/OUTPUT, CH15	J32		
			4	11	9	16				LINE INPUTS, CH 9 TO 16	P01		
LINFB-16			4	2	16	15				LINE AMPLIFIER, CH16	J16		1.820.715.00
			4	2	46	6				LINE INPUT/OUTPUT, CH16	J37		
			4	11	9	14				LINE INPUTS, CH 9 TO 16	P01		

```
*****************************************************************************************************************************
*   WILLI STUDER AG   *   S I G N A L   W I R E   L I S T          * 89/07/20 *  9:25 *  P A G E 162   *
*****************************************************************************************************************************
*                     * TAPE TRANSPORT & AUDIO MCH *                 * 89/04/19 - 00                                        *
*****************************************************************************************************************************
```

SIGNAL NAME	COLOR	MI	ASY	GRP	ELM	PNT	S	LV	TYPE	DESCRIPTION OF ELEMENT		REMARK	ELEMENT NR.
LINFB-17			5	1	1	15				LINE AMPLIFIER, CH17	J01		1.820.715.00
			5	1	31	6				LINE INPUT/OUTPUT, CH17	J22		
			5	11	9	25				LINE INPUTS, CH19 TO 24	P01		
LINFB-18			5	1	6	15				LINE AMPLIFIER, CH18	J06		1.820.715.00
			5	1	36	6				LINE INPUT/OUTPUT, CH18	J27		
			5	11	9	23				LINE INPUTS, CH19 TO 24	P01		
LINFB-19			5	1	11	15				LINE AMPLIFIER, CH19	J11		1.820.715.00
			5	1	41	6				LINE INPUT/OUTPUT, CH19	J32		
			5	11	9	22				LINE INPUTS, CH19 TO 24	P01		
LINFB-20			5	1	16	15				LINE AMPLIFIER, CH20	J16		1.820.715.00
			5	1	46	6				LINE INPUT/OUTPUT, CH20	J37		
			5	11	9	20				LINE INPUTS, CH19 TO 24	P01		
LINFB-21			5	2	1	15				LINE AMPLIFIER, CH21	J01		1.820.715.00
			5	2	31	6				LINE INPUT/OUTPUT, CH21	J22		
			5	11	9	19				LINE INPUTS, CH19 TO 24	P01		
LINFB-22			5	2	6	15				LINE AMPLIFIER, CH22	J06		1.820.715.00
			5	2	36	6				LINE INPUT/OUTPUT, CH22	J27		
			5	11	9	17				LINE INPUTS, CH19 TO 24	P01		
LINFB-23			5	2	11	15				LINE AMPLIFIER, CH23	J11		1.820.715.00
			5	2	41	6				LINE INPUT/OUTPUT, CH23	J32		
			5	11	9	16				LINE INPUTS, CH19 TO 24	P01		
LINFB-24			5	2	16	15				LINE AMPLIFIER, CH24	J16		1.820.715.00
			5	2	46	6				LINE INPUT/OUTPUT, CH24	J37		
			5	11	9	14				LINE INPUTS, CH19 TO 24	P01		
LINSA-01			3	11	1	2				LINE INPUT, CH 1	XLR J01		
LINSA-02			3	11	2	2				LINE INPUT, CH 2	XLR J02		
LINSA-03			3	11	3	2				LINE INPUT, CH 3	XLR J03		
LINSA-04			3	11	4	2				LINE INPUT, CH 4	XLR J04		
LINSA-05			3	11	5	2				LINE INPUT, CH 5	XLR J05		
LINSA-06			3	11	6	2				LINE INPUT, CH 6	XLR J06		
LINSA-07			3	11	7	2				LINE INPUT, CH 7	XLR J07		
LINSA-08			3	11	8	2				LINE INPUT, CH 8	XLR J08		
LINSA-09			4	11	1	2				LINE INPUT, CH 9	XLR J01		
LINSA-10			4	11	2	2				LINE INPUT, CH10	XLR J02		
LINSA-11			4	11	3	2				LINE INPUT, CH11	XLR J03		
LINSA-12			4	11	4	2				LINE INPUT, CH12	XLR J04		

* WILLI STUDER AG * S I G N A L W I R E L I S T * 89/07/20 * 9:25 * P A G E 163 *
* * TAPE TRANSPORT & AUDIO MCH * * 89/04/19 - 00 *

SIGNAL NAME	COLOR	MI	ASY	GRP	ELM	PNT	S	LV	TYPE	DESCRIPTION OF ELEMENT		REMARK	ELEMENT NR.
LINSA-13			4	11	5	2				LINE INPUT, CH13	XLR J05		
LINSA-14			4	11	6	2				LINE INPUT, CH14	XLR J06		
LINSA-15			4	11	7	2				LINE INPUT, CH15	XLR J07		
LINSA-16			4	11	8	2				LINE INPUT, CH16	XLR J08		
LINSA-17			5	11	1	2				LINE INPUT, CH17	XLR J01		
LINSA-18			5	11	2	2				LINE INPUT, CH18	XLR J02		
LINSA-19			5	11	3	2				LINE INPUT, CH19	XLR J03		
LINSA-20			5	11	4	2				LINE INPUT, CH20	XLR J04		
LINSA-21			5	11	5	2				LINE INPUT, CH21	XLR J05		
LINSA-22			5	11	6	2				LINE INPUT, CH22	XLR J06		
LINSA-23			5	11	7	2				LINE INPUT, CH23	XLR J07		
LINSA-24			5	11	8	2				LINE INPUT, CH24	XLR J08		
LINSB-01			3	11	1	3				LINE INPUT, CH 1	XLR J01		
LINSB-02			3	11	2	3				LINE INPUT, CH 2	XLR J02		
LINSB-03			3	11	3	3				LINE INPUT, CH 3	XLR J03		
LINSB-04			3	11	4	3				LINE INPUT, CH 4	XLR J04		
LINSB-05			3	11	5	3				LINE INPUT, CH 5	XLR J05		
LINSB-06			3	11	6	3				LINE INPUT, CH 6	XLR J06		
LINSB-07			3	11	7	3				LINE INPUT, CH 7	XLR J07		
LINSB-08			3	11	8	3				LINE INPUT, CH 8	XLR J08		
LINSB-09			4	11	1	3				LINE INPUT, CH 9	XLR J01		
LINSB-10			4	11	2	3				LINE INPUT, CH10	XLR J02		
LINSB-11			4	11	3	3				LINE INPUT, CH11	XLR J03		
LINSB-12			4	11	4	3				LINE INPUT, CH12	XLR J04		
LINSB-13			4	11	5	3				LINE INPUT, CH13	XLR J05		
LINSB-14			4	11	6	3				LINE INPUT, CH14	XLR J06		
LINSB-15			4	11	7	3				LINE INPUT, CH15	XLR J07		
LINSB-16			4	11	8	3				LINE INPUT, CH16	XLR J08		

* WILLI STUDER AG * S I G N A L W I R E L I S T * 89/07/20 * 9:25 * P A G E 164 *
* * TAPE TRANSPORT & AUDIO MCH * * 89/04/19 - 00 *

SIGNAL NAME	COLOR	MI	ASY	GRP	ELM	PNT	S	LV	TYPE	DESCRIPTION OF ELEMENT		REMARK	ELEMENT NR.
LINSB-17			5	11	1	3				LINE INPUT, CH17	XLR J01		
LINSB-18			5	11	2	3				LINE INPUT, CH18	XLR J02		
LINSB-19			5	11	3	3				LINE INPUT, CH19	XLR J03		
LINSB-20			5	11	4	3				LINE INPUT, CH20	XLR J04		
LINSB-21			5	11	5	3				LINE INPUT, CH21	XLR J05		
LINSB-22			5	11	6	3				LINE INPUT, CH22	XLR J06		
LINSB-23			5	11	7	3				LINE INPUT, CH23	XLR J07		
LINSB-24			5	11	8	3				LINE INPUT, CH24	XLR J08		
LOUFA-01			3	1	1	3				LINE AMPLIFIER, CH 1	J01		1.820.715.00
			3	1	31	1				LINE INPUT/OUTPUT, CH 1	J22		
			3	14	9	12				LINE OUTPUTS, CH 1 TO 8	P09		
LOUFA-02			3	1	6	3				LINE AMPLIFIER, CH 2	J06		1.820.715.00
			3	1	36	1				LINE INPUT/OUTPUT, CH 2	J27		
			3	14	9	10				LINE OUTPUTS, CH 1 TO 8	P09		
LOUFA-03			3	1	11	3				LINE AMPLIFIER, CH 3	J11		1.820.715.00
			3	1	41	1				LINE INPUT/OUTPUT, CH 3	J32		
			3	14	9	9				LINE OUTPUTS, CH 1 TO 8	P09		
LOUFA-04			3	1	16	3				LINE AMPLIFIER, CH 4	J16		1.820.715.00
			3	1	46	1				LINE INPUT/OUTPUT, CH 4	J37		
			3	14	9	7				LINE OUTPUTS, CH 1 TO 8	P09		
LOUFA-05			3	2	1	3				LINE AMPLIFIER, CH 5	J01		1.820.715.00
			3	2	31	1				LINE INPUT/OUTPUT, CH 5	J22		
			3	14	9	6				LINE OUTPUTS, CH 1 TO 8	P09		
LOUFA-06			3	2	6	3				LINE AMPLIFIER, CH 6	J06		1.820.715.00
			3	2	36	1				LINE INPUT/OUTPUT, CH 6	J27		
			3	14	9	4				LINE OUTPUTS, CH 1 TO 8	P09		
LOUFA-07			3	2	11	3				LINE AMPLIFIER, CH 7	J11		1.820.715.00
			3	2	41	1				LINE INPUT/OUTPUT, CH 7	J32		
			3	14	9	3				LINE OUTPUTS, CH 1 TO 8	P09		
LOUFA-08			3	2	16	3				LINE AMPLIFIER, CH 8	J16		1.820.715.00
			3	2	46	1				LINE INPUT/OUTPUT, CH 8	J37		
			3	14	9	1				LINE OUTPUTS, CH 1 TO 8	P09		
LOUFA-09			4	1	1	3				LINE AMPLIFIER, CH 9	J01		1.820.715.00
			4	1	31	1				LINE INPUT/OUTPUT, CH 9	J22		
			4	14	9	12				LINE OUTPUTS, CH 9 TO 16	P09		
LOUFA-10			4	1	6	3				LINE AMPLIFIER, CH10	J06		1.820.715.00
			4	1	36	1				LINE INPUT/OUTPUT, CH10	J27		
			4	14	9	10				LINE OUTPUTS, CH 9 TO 16	P09		

* WILLI STUDER AG * S I G N A L W I R E L I S T * 89/07/20 * 9:25 * P A G E 165 *
* * TAPE TRANSPORT & AUDIO MCH * * 89/04/19 - 00 *

SIGNAL NAME	COLOR	MI	ASY	GRP	ELM	PNT	S	LV	TYPE	DESCRIPTION OF ELEMENT		REMARK	ELEMENT NR.
LOUFA-11			4	1	11	3				LINE AMPLIFIER, CH11	J11		1.820.715.00
			4	1	41	1				LINE INPUT/OUTPUT, CH11	J32		
			4	14	9	9				LINE OUTPUTS, CH 9 TO 16	P09		
LOUFA-12			4	1	16	3				LINE AMPLIFIER, CH12	J16		1.820.715.00
			4	1	46	1				LINE INPUT/OUTPUT, CH12	J37		
			4	14	9	7				LINE OUTPUTS, CH 9 TO 16	P09		
LOUFA-13			4	2	1	3				LINE AMPLIFIER, CH13	J01		1.820.715.00
			4	2	31	1				LINE INPUT/OUTPUT, CH13	J22		
			4	14	9	6				LINE OUTPUTS, CH 9 TO 16	P09		
LOUFA-14			4	2	6	3				LINE AMPLIFIER, CH14	J06		1.820.715.00
			4	2	36	1				LINE INPUT/OUTPUT, CH14	J27		
			4	14	9	4				LINE OUTPUTS, CH 9 TO 16	P09		
LOUFA-15			4	2	11	3				LINE AMPLIFIER, CH15	J11		1.820.715.00
			4	2	41	1				LINE INPUT/OUTPUT, CH15	J32		
			4	14	9	3				LINE OUTPUTS, CH 9 TO 16	P09		
LOUFA-16			4	2	16	3				LINE AMPLIFIER, CH16	J16		1.820.715.00
			4	2	46	1				LINE INPUT/OUTPUT, CH16	J37		
			4	14	9	1				LINE OUTPUTS, CH 9 TO 16	P09		
LOUFA-17			5	1	1	3				LINE AMPLIFIER, CH17	J01		1.820.715.00
			5	1	31	1				LINE INPUT/OUTPUT, CH17	J22		
			5	14	9	12				LINE OUTPUTS, CH19 TO 24	P09		
LOUFA-18			5	1	6	3				LINE AMPLIFIER, CH18	J06		1.820.715.00
			5	1	36	1				LINE INPUT/OUTPUT, CH18	J27		
			5	14	9	10				LINE OUTPUTS, CH19 TO 24	P09		
LOUFA-19			5	1	11	3				LINE AMPLIFIER, CH19	J11		1.820.715.00
			5	1	41	1				LINE INPUT/OUTPUT, CH19	J32		
			5	14	9	9				LINE OUTPUTS, CH19 TO 24	P09		
LOUFA-20			5	1	16	3				LINE AMPLIFIER, CH20	J16		1.820.715.00
			5	1	46	1				LINE INPUT/OUTPUT, CH20	J37		
			5	14	9	7				LINE OUTPUTS, CH19 TO 24	P09		
LOUFA-21			5	2	1	3				LINE AMPLIFIER, CH21	J01		1.820.715.00
			5	2	31	1				LINE INPUT/OUTPUT, CH21	J22		
			5	14	9	6				LINE OUTPUTS, CH19 TO 24	P09		
LOUFA-22			5	2	6	3				LINE AMPLIFIER, CH22	J06		1.820.715.00
			5	2	36	1				LINE INPUT/OUTPUT, CH22	J27		
			5	14	9	4				LINE OUTPUTS, CH19 TO 24	P09		
LOUFA-23			5	2	11	3				LINE AMPLIFIER, CH23	J11		1.820.715.00
			5	2	41	1				LINE INPUT/OUTPUT, CH23	J32		
			5	14	9	3				LINE OUTPUTS, CH19 TO 24	P09		
LOUFA-24			5	2	16	3				LINE AMPLIFIER, CH24	J16		1.820.715.00
			5	2	46	1				LINE INPUT/OUTPUT, CH24	J37		
			5	14	9	1				LINE OUTPUTS, CH19 TO 24	P09		

* WILLI STUDER AG * S I G N A L W I R E L I S T * 89/07/20 * 9:25 * P A G E 166 *
* * TAPE TRANSPORT & AUDIO MCH * * 89/04/19 - 00 *

SIGNAL NAME	COLOR	MI	ASY	GRP	ELM	PNT	S	LV	TYPE	DESCRIPTION OF ELEMENT		REMARK	ELEMENT NR.
LOUFB-01			3	1	1	4				LINE AMPLIFIER, CH 1	J01		1.820.715.00
			3	1	31	2				LINE INPUT/OUTPUT, CH 1	J22		
			3	14	9	25				LINE OUTPUTS, CH 1 TO 8	P09		
LOUFB-02			3	1	6	4				LINE AMPLIFIER, CH 2	J06		1.820.715.00
			3	1	36	2				LINE INPUT/OUTPUT, CH 2	J27		
			3	14	9	23				LINE OUTPUTS, CH 1 TO 8	P09		
LOUFB-03			3	1	11	4				LINE AMPLIFIER, CH 3	J11		1.820.715.00
			3	1	41	2				LINE INPUT/OUTPUT, CH 3	J32		
			3	14	9	22				LINE OUTPUTS, CH 1 TO 8	P09		
LOUFB-04			3	1	16	4				LINE AMPLIFIER, CH 4	J16		1.820.715.00
			3	1	46	2				LINE INPUT/OUTPUT, CH 4	J37		
			3	14	9	20				LINE OUTPUTS, CH 1 TO 8	P09		
LOUFB-05			3	2	1	4				LINE AMPLIFIER, CH 5	J01		1.820.715.00
			3	2	31	2				LINE INPUT/OUTPUT, CH 5	J22		
			3	14	9	19				LINE OUTPUTS, CH 1 TO 8	P09		
LOUFB-06			3	2	6	4				LINE AMPLIFIER, CH 6	J06		1.820.715.00
			3	2	36	2				LINE INPUT/OUTPUT, CH 6	J27		
			3	14	9	17				LINE OUTPUTS, CH 1 TO 8	P09		
LOUFB-07			3	2	11	4				LINE AMPLIFIER, CH 7	J11		1.820.715.00
			3	2	41	2				LINE INPUT/OUTPUT, CH 7	J32		
			3	14	9	16				LINE OUTPUTS, CH 1 TO 8	P09		
LOUFB-08			3	2	16	4				LINE AMPLIFIER, CH 8	J16		1.820.715.00
			3	2	46	2				LINE INPUT/OUTPUT, CH 8	J37		
			3	14	9	14				LINE OUTPUTS, CH 1 TO 8	P09		
LOUFB-09			4	1	1	4				LINE AMPLIFIER, CH 9	J01		1.820.715.00
			4	1	31	2				LINE INPUT/OUTPUT, CH 9	J22		
			4	14	9	25				LINE OUTPUTS, CH 9 TO 16	P09		
LOUFB-10			4	1	6	4				LINE AMPLIFIER, CH10	J06		1.820.715.00
			4	1	36	2				LINE INPUT/OUTPUT, CH10	J27		
			4	14	9	23				LINE OUTPUTS, CH 9 TO 16	P09		
LOUFB-11			4	1	11	4				LINE AMPLIFIER, CH11	J11		1.820.715.00
			4	1	41	2				LINE INPUT/OUTPUT, CH11	J32		
			4	14	9	22				LINE OUTPUTS, CH 9 TO 16	P09		
LOUFB-12			4	1	16	4				LINE AMPLIFIER, CH12	J16		1.820.715.00
			4	1	46	2				LINE INPUT/OUTPUT, CH12	J37		
			4	14	9	20				LINE OUTPUTS, CH 9 TO 16	P09		
LOUFB-13			4	2	1	4				LINE AMPLIFIER, CH13	J01		1.820.715.00
			4	2	31	2				LINE INPUT/OUTPUT, CH13	J22		
			4	14	9	19				LINE OUTPUTS, CH 9 TO 16	P09		
LOUFB-14			4	2	6	4				LINE AMPLIFIER, CH14	J06		1.820.715.00
			4	2	36	2				LINE INPUT/OUTPUT, CH14	J27		
			4	14	9	17				LINE OUTPUTS, CH 9 TO 16	P09		

* WILLI STUDER AG * S I G N A L W I R E L I S T * 89/07/20 * 9:25 * P A G E 167 *
* * TAPE TRANSPORT & AUDIO MCH * * 89/04/19 - 00 *

SIGNAL NAME	COLOR	MI	ASY	GRP	ELM	PNT	S	LV	TYPE	DESCRIPTION OF ELEMENT		REMARK	ELEMENT NR.
LOUFB-15			4	2	11	4				LINE AMPLIFIER, CH15	J11		1.820.715.00
			4	2	41	2				LINE INPUT/OUTPUT, CH15	J32		
			4	14	9	16				LINE OUTPUTS, CH 9 TO 16	P09		
LOUFB-16			4	2	16	4				LINE AMPLIFIER, CH16	J16		1.820.715.00
			4	2	46	2				LINE INPUT/OUTPUT, CH16	J37		
			4	14	9	14				LINE OUTPUTS, CH 9 TO 16	P09		
LOUFB-17			5	1	1	4				LINE AMPLIFIER, CH17	J01		1.820.715.00
			5	1	31	2				LINE INPUT/OUTPUT, CH17	J22		
			5	14	9	25				LINE OUTPUTS, CH19 TO 24	P09		
LOUFB-18			5	1	6	4				LINE AMPLIFIER, CH18	J06		1.820.715.00
			5	1	36	2				LINE INPUT/OUTPUT, CH18	J27		
			5	14	9	23				LINE OUTPUTS, CH19 TO 24	P09		
LOUFB-19			5	1	11	4				LINE AMPLIFIER, CH19	J11		1.820.715.00
			5	1	41	2				LINE INPUT/OUTPUT, CH19	J32		
			5	14	9	22				LINE OUTPUTS, CH19 TO 24	P09		
LOUFB-20			5	1	16	4				LINE AMPLIFIER, CH20	J16		1.820.715.00
			5	1	46	2				LINE INPUT/OUTPUT, CH20	J37		
			5	14	9	20				LINE OUTPUTS, CH19 TO 24	P09		
LOUFB-21			5	2	1	4				LINE AMPLIFIER, CH21	J01		1.820.715.00
			5	2	31	2				LINE INPUT/OUTPUT, CH21	J22		
			5	14	9	19				LINE OUTPUTS, CH19 TO 24	P09		
LOUFB-22			5	2	6	4				LINE AMPLIFIER, CH22	J06		1.820.715.00
			5	2	36	2				LINE INPUT/OUTPUT, CH22	J27		
			5	14	9	17				LINE OUTPUTS, CH19 TO 24	P09		
LOUFB-23			5	2	11	4				LINE AMPLIFIER, CH23	J11		1.820.715.00
			5	2	41	2				LINE INPUT/OUTPUT, CH23	J32		
			5	14	9	16				LINE OUTPUTS, CH19 TO 24	P09		
LOUFB-24			5	2	16	4				LINE AMPLIFIER, CH24	J16		1.820.715.00
			5	2	46	2				LINE INPUT/OUTPUT, CH24	J37		
			5	14	9	14				LINE OUTPUTS, CH19 TO 24	P09		
LOUSA-01			3	14	1	2				LINE OUTPUT, CH 1	XLR P01		
LOUSA-02			3	14	2	2				LINE OUTPUT, CH 2	XLR P02		
LOUSA-03			3	14	3	2				LINE OUTPUT, CH 3	XLR P03		
LOUSA-04			3	14	4	2				LINE OUTPUT, CH 4	XLR P04		
LOUSA-05			3	14	5	2				LINE OUTPUT, CH 5	XLR P05		
LOUSA-06			3	14	6	2				LINE OUTPUT, CH 6	XLR P06		
LOUSA-07			3	14	7	2				LINE OUTPUT, CH 7	XLR P07		
LOUSA-08			3	14	8	2				LINE OUTPUT, CH 8	XLR P08		

* WILLI STUDER AG * S I G N A L W I R E L I S T * 89/07/20 * 9:25 * P A G E 168 *
* * TAPE TRANSPORT & AUDIO MCH * * 89/04/19 - 00 *

SIGNAL NAME	COLOR	MI	ASY	GRP	ELM	PNT	S	LV	TYPE	DESCRIPTION OF ELEMENT		REMARK	ELEMENT NR.
LOUSA-09			4	14	1	2				LINE OUTPUT, CH 9	XLR P01		
LOUSA-10			4	14	2	2				LINE OUTPUT, CH10	XLR P02		
LOUSA-11			4	14	3	2				LINE OUTPUT, CH11	XLR P03		
LOUSA-12			4	14	4	2				LINE OUTPUT, CH12	XLR P04		
LOUSA-13			4	14	5	2				LINE OUTPUT, CH13	XLR P05		
LOUSA-14			4	14	6	2				LINE OUTPUT, CH14	XLR P06		
LOUSA-15			4	14	7	2				LINE OUTPUT, CH15	XLR P07		
LOUSA-16			4	14	8	2				LINE OUTPUT, CH16	XLR P08		
LOUSA-17			5	14	1	2				LINE OUTPUT, CH17	XLR P01		
LOUSA-18			5	14	2	2				LINE OUTPUT, CH18	XLR P02		
LOUSA-19			5	14	3	2				LINE OUTPUT, CH19	XLR P03		
LOUSA-20			5	14	4	2				LINE OUTPUT, CH20	XLR P04		
LOUSA-21			5	14	5	2				LINE OUTPUT, CH21	XLR P05		
LOUSA-22			5	14	6	2				LINE OUTPUT, CH22	XLR P06		
LOUSA-23			5	14	7	2				LINE OUTPUT, CH23	XLR P07		
LOUSA-24			5	14	8	2				LINE OUTPUT, CH24	XLR P08		
LOUSB-01			3	14	1	3				LINE OUTPUT, CH 1	XLR P01		
LOUSB-02			3	14	2	3				LINE OUTPUT, CH 2	XLR P02		
LOUSB-03			3	14	3	3				LINE OUTPUT, CH 3	XLR P03		
LOUSB-04			3	14	4	3				LINE OUTPUT, CH 4	XLR P04		
LOUSB-05			3	14	5	3				LINE OUTPUT, CH 5	XLR P05		
LOUSB-06			3	14	6	3				LINE OUTPUT, CH 6	XLR P06		
LOUSB-07			3	14	7	3				LINE OUTPUT, CH 7	XLR P07		
LOUSB-08			3	14	8	3				LINE OUTPUT, CH 8	XLR P08		
LOUSB-09			4	14	1	3				LINE OUTPUT, CH 9	XLR P01		
LOUSB-10			4	14	2	3				LINE OUTPUT, CH10	XLR P02		
LOUSB-11			4	14	3	3				LINE OUTPUT, CH11	XLR P03		
LOUSB-12			4	14	4	3				LINE OUTPUT, CH12	XLR P04		

```
*    WILLI STUDER AG    *    S I G N A L    W I R E    L I S T              * 89/07/20  *   9:25  *  P A G E 169   *
*                          * TAPE TRANSPORT & AUDIO MCH *                    * 89/04/19 - 00                        *
```

SIGNAL NAME	COLOR	MI	ASY	GRP	ELM	PNT	S	LV	TYPE	DESCRIPTION OF ELEMENT		REMARK	ELEMENT NR.
LOUSB-13			4	14	5	3				LINE OUTPUT, CH13	XLR P05		
LOUSB-14			4	14	6	3				LINE OUTPUT, CH14	XLR P06		
LOUSB-15			4	14	7	3				LINE OUTPUT, CH15	XLR P07		
LOUSB-16			4	14	8	3				LINE OUTPUT, CH16	XLR P08		
LOUSB-17			5	14	1	3				LINE OUTPUT, CH17	XLR P01		
LOUSB-18			5	14	2	3				LINE OUTPUT, CH18	XLR P02		
LOUSB-19			5	14	3	3				LINE OUTPUT, CH19	XLR P03		
LOUSB-20			5	14	4	3				LINE OUTPUT, CH20	XLR P04		
LOUSB-21			5	14	5	3				LINE OUTPUT, CH21	XLR P05		
LOUSB-22			5	14	6	3				LINE OUTPUT, CH22	XLR P06		
LOUSB-23			5	14	7	3				LINE OUTPUT, CH23	XLR P07		
LOUSB-24			5	14	8	3				LINE OUTPUT, CH24	XLR P08		
M-FREC	2		1	23	12	6			B	MASTER TALLIES	J11		
M-MOVE1	5		1	23	12	3			B	MASTER TALLIES	J11		
M-MOVE2L	8		1	23	12	9			B	MASTER TALLIES	J11		
M-PLAY	7		1	23	12	4			B	MASTER TALLIES	J11		
M-REC	6		1	23	12	8			B	MASTER TALLIES	J11		
M-STOP	3		1	23	12	2			B	MASTER TALLIES	J11		
M-TPILOT	4		1	23	12	7			B	MASTER TALLIES	J11		
MBCR	9		1	23	5	3			L	BICODE	J05		
MBCS	4		1	23	5	2			L	BICODE	J05		
MONIT-01			3	1	1	1				LINE AMPLIFIER, CH 1	J01		1.820.715.00
			3	1	2	10A				CONTROLLER INTERNAL NRS CH 1	J02		1.820.815.00
MONIT-02			3	1	6	1				LINE AMPLIFIER, CH 2	J06		1.820.715.00
			3	1	7	10A				CONTROLLER INTERNAL NRS CH 2	J07		1.820.815.00
MONIT-03			3	1	11	1				LINE AMPLIFIER, CH 3	J11		1.820.715.00
			3	1	12	10A				CONTROLLER INTERNAL NRS CH 3	J12		1.820.815.00
MONIT-04			3	1	16	1				LINE AMPLIFIER, CH 4	J16		1.820.715.00
			3	1	17	10A				CONTROLLER INTERNAL NRS CH 4	J17		1.820.815.00
MONIT-05			3	2	1	1				LINE AMPLIFIER, CH 5	J01		1.820.715.00
			3	2	2	10A				CONTROLLER INTERNAL NRS CH 5	J02		1.820.815.00

```
*    WILLI STUDER AG    *    S I G N A L    W I R E    L I S T              * 89/07/20  *   9:25  *  P A G E 170   *
*                          * TAPE TRANSPORT & AUDIO MCH *                    * 89/04/19 - 00                        *
```

SIGNAL NAME	COLOR	MI	ASY	GRP	ELM	PNT	S	LV	TYPE	DESCRIPTION OF ELEMENT		REMARK	ELEMENT NR.
MONIT-06			3	2	6	1				LINE AMPLIFIER, CH 6	J06		1.820.715.00
			3	2	7	10A				CONTROLLER INTERNAL NRS CH 6	J07		1.820.815.00
MONIT-07			3	2	11	1				LINE AMPLIFIER, CH 7	J11		1.820.715.00
			3	2	12	10A				CONTROLLER INTERNAL NRS CH 7	J12		1.820.815.00
MONIT-08			3	2	16	1				LINE AMPLIFIER, CH 8	J16		1.820.715.00
			3	2	17	10A				CONTROLLER INTERNAL NRS CH 8	J17		1.820.815.00
MONIT-09			4	1	1	1				LINE AMPLIFIER, CH 9	J01		1.820.715.00
			4	1	2	10A				CONTROLLER INTERNAL NRS CH 9	J02		1.820.815.00
MONIT-10			4	1	6	1				LINE AMPLIFIER, CH10	J06		1.820.715.00
			4	1	7	10A				CONTROLLER INTERNAL NRS CH10	J07		1.820.815.00
MONIT-11			4	1	11	1				LINE AMPLIFIER, CH11	J11		1.820.715.00
			4	1	12	10A				CONTROLLER INTERNAL NRS CH11	J12		1.820.815.00
MONIT-12			4	1	16	1				LINE AMPLIFIER, CH12	J16		1.820.715.00
			4	1	17	10A				CONTROLLER INTERNAL NRS CH12	J17		1.820.815.00
MONIT-13			4	2	1	1				LINE AMPLIFIER, CH13	J01		1.820.715.00
			4	2	2	10A				CONTROLLER INTERNAL NRS CH13	J02		1.820.815.00
MONIT-14			4	2	6	1				LINE AMPLIFIER, CH14	J06		1.820.715.00
			4	2	7	10A				CONTROLLER INTERNAL NRS CH14	J07		1.820.815.00
MONIT-15			4	2	11	1				LINE AMPLIFIER, CH15	J11		1.820.715.00
			4	2	12	10A				CONTROLLER INTERNAL NRS CH15	J12		1.820.815.00
MONIT-16			4	2	16	1				LINE AMPLIFIER, CH16	J16		1.820.715.00
			4	2	17	10A				CONTROLLER INTERNAL NRS CH16	J17		1.820.815.00
MONIT-17			5	1	1	1				LINE AMPLIFIER, CH17	J01		1.820.715.00
			5	1	2	10A				CONTROLLER INTERNAL NRS CH17	J02		1.820.815.00
MONIT-18			5	1	6	1				LINE AMPLIFIER, CH18	J06		1.820.715.00
			5	1	7	10A				CONTROLLER INTERNAL NRS CH18	J07		1.820.815.00
MONIT-19			5	1	11	1				LINE AMPLIFIER, CH19	J11		1.820.715.00
			5	1	12	10A				CONTROLLER INTERNAL NRS CH19	J12		1.820.815.00
MONIT-20			5	1	16	1				LINE AMPLIFIER, CH20	J16		1.820.715.00
			5	1	17	10A				CONTROLLER INTERNAL NRS CH20	J17		1.820.815.00
MONIT-21			5	2	1	1				LINE AMPLIFIER, CH21	J01		1.820.715.00
			5	2	2	10A				CONTROLLER INTERNAL NRS CH21	J02		1.820.815.00
MONIT-22			5	2	6	1				LINE AMPLIFIER, CH22	J06		1.820.715.00
			5	2	7	10A				CONTROLLER INTERNAL NRS CH22	J07		1.820.815.00
MONIT-23			5	2	11	1				LINE AMPLIFIER, CH23	J11		1.820.715.00
			5	2	12	10A				CONTROLLER INTERNAL NRS CH23	J12		1.820.815.00
MONIT-24			5	2	16	1				LINE AMPLIFIER, CH24	J16		1.820.715.00
			5	2	17	10A				CONTROLLER INTERNAL NRS CH24	J17		1.820.815.00

WILLI STUDER AG * S I G N A L W I R E L I S T * 89/07/20 * 9:25 * P A G E 171
* TAPE TRANSPORT & AUDIO MCH * * 89/04/19 - 00

SIGNAL NAME	COLOR	MI	ASY	GRP	ELM	PNT	S	LV	TYPE	DESCRIPTION OF ELEMENT		REMARK	ELEMENT NR.
MOTORON			1	22	25	14B				FLOPPY DISK CONTROLLER	J10		1.820.726.00
			1	22	26	16				FLOPPY DISK CONNECTOR	P13		1.820.000.00
MTC1A	6		1	23	4	2			L	TC IN/PILOT	J04		
	6		1	23	6	2			L	MASTER TC OUT	P01		
	6		1	23	7	2			L	MASTER TC IN	J06		
MTC1B	9		1	23	4	3			L	TC IN/PILOT	J04		
	9		1	23	6	3			L	MASTER TC OUT	P01		
	9		1	23	7	3			L	MASTER TC IN	J06		
OC-RES 1			1	20	43	27A				TAPE DECK PERIPHERY CONTR.	J04		1.820.762.00
OC-RES 2			1	20	43	28A				TAPE DECK PERIPHERY CONTR.	J04		1.820.762.00
OC-RES 3			1	20	43	29A				TAPE DECK PERIPHERY CONTR.	J04		1.820.762.00
OC-RES 4			1	20	43	30A				TAPE DECK PERIPHERY CONTR.	J04		1.820.762.00
OR-CMCLK			1	25	2	11			B	CONNECTOR SYNCHRONIZER CONTROL	J02		
			1	27	3	21				TO GRP25, ELM02 (SYNCHRONIZER)	P03		
OR-MVCLK			1	25	2	7			B	CONNECTOR SYNCHRONIZER CONTROL	J02		
			1	27	3	13				TO GRP25, ELM02 (SYNCHRONIZER)	P03		
OR-MVDIR			1	25	2	10			B	CONNECTOR SYNCHRONIZER CONTROL	J02		
			1	27	3	19				TO GRP25, ELM02 (SYNCHRONIZER)	P03		
OR-SYENB			1	25	2	12			B	CONNECTOR SYNCHRONIZER CONTROL	J02		
			1	27	3	23				TO GRP25, ELM02 (SYNCHRONIZER)	P03		
PNLBUS1			1	21	1	1				CONNECTOR STUDIOBUS	J02		
			1	21	2	1				CONNECTOR STUDIOBUS	J03		
			1	21	3	1				CONNECTOR STUDIOBUS	J04		
			1	21	20	23				COMMUNICATIONS CONTROLLER	J05		1.820.718.00
			1	22	1	1				CONNECTOR STUDIOBUS	J02		
			1	22	2	1				CONNECTOR STUDIOBUS	J03		
			1	22	3	1				CONNECTOR STUDIOBUS	J04		
			1	22	20	23				COMMUNICATIONS CONTROLLER	J05		1.820.718.00
	4		1	24	7	7			L	VU METER PANEL EXTERNAL			
	4		1	35	8	1			U	WIRE FIELD			
	4		1	35	8	2			U	WIRE FIELD			
	4		1	35	8	3			U	WIRE FIELD			
	4		1	35	8	4			U	WIRE FIELD			
			1	35	8	5				WIRE FIELD			
			1	35	8	6				WIRE FIELD			
	4		1	35	50	7			L	CONNECTOR TO VU METER PANEL	J04		
	4		1	35	51	7			L	CONN. TO VU METER PANEL EXTERNAL	J05		
	4		1	35	60	1			N	FROM GRP21, ELM01	P11		
			6	1	8	1					P08/P09		
	9		6	17	1	7				CONNECTOR FROM ASS01, GRP35			
	9		6	17	2	1			Y	TO ASS06, GRP01, ELM08			

WILLI STUDER AG * S I G N A L W I R E L I S T * 89/07/20 * 9:25 * P A G E 172
* TAPE TRANSPORT & AUDIO MCH * * 89/04/19 - 00

SIGNAL NAME	COLOR	MI	ASY	GRP	ELM	PNT	S	LV	TYPE	DESCRIPTION OF ELEMENT		REMARK	ELEMENT NR.
PNLBUS2			1	21	1	3				CONNECTOR STUDIOBUS	J02		
			1	21	2	3				CONNECTOR STUDIOBUS	J03		
			1	21	3	3				CONNECTOR STUDIOBUS	J04		
			1	21	20	24				COMMUNICATIONS CONTROLLER	J05		1.820.718.00
			1	22	1	3				CONNECTOR STUDIOBUS	J02		
			1	22	2	3				CONNECTOR STUDIOBUS	J03		
			1	22	3	3				CONNECTOR STUDIOBUS	J04		
			1	22	20	24				COMMUNICATIONS CONTROLLER	J05		1.820.718.00
	5		1	24	7	8			L	VU METER PANEL EXTERNAL			
	5		1	35	9	1			U	WIRE FIELD			
	5		1	35	9	2			U	WIRE FIELD			
	5		1	35	9	3			U	WIRE FIELD			
	5		1	35	9	4			U	WIRE FIELD			
			1	35	9	5				WIRE FIELD			
			1	35	9	6				WIRE FIELD			
	5		1	35	50	8			L	CONNECTOR TO VU METER PANEL	J04		
	5		1	35	51	8			L	CONN. TO VU METER PANEL EXTERNAL	J05		
	5		1	35	60	3			N	FROM GRP21, ELM01	P11		
			6	1	8	2					P08/P09		
	0		6	17	1	8				CONNECTOR FROM ASS01, GRP35			
	0		6	17	2	2			Y	TO ASS06, GRP01, ELM08			
PWMPL-H1			1	20	1	9				SPOOLING M. DRIVE AMP. LEFT	P01		
			1	20	40	28				SPOOLING MOTOR DRIVER	J01		1.820.759.00
			1	33	2	9				FROM GRP20, ELM01 (BASIS B. TD)	P01		
PWMPL-H2			1	20	1	10				SPOOLING M. DRIVE AMP. LEFT	P01		
			1	20	40	34				SPOOLING MOTOR DRIVER	J01		1.820.759.00
			1	33	2	10				FROM GRP20, ELM01 (BASIS B. TD)	P01		
PWMPL-L1			1	20	1	7				SPOOLING M. DRIVE AMP. LEFT	P01		
			1	20	40	35				SPOOLING MOTOR DRIVER	J01		1.820.759.00
			1	33	2	7				FROM GRP20, ELM01 (BASIS B. TD)	P01		
PWMPL-L2			1	20	1	8				SPOOLING M. DRIVE AMP. LEFT	P01		
			1	33	2	8				FROM GRP20, ELM01 (BASIS B. TD)	P01		
PWMPL-L3			1	20	1	11				SPOOLING M. DRIVE AMP. LEFT	P01		
			1	20	40	29				SPOOLING MOTOR DRIVER	J01		1.820.759.00
			1	33	2	11				FROM GRP20, ELM01 (BASIS B. TD)	P01		
PWMPL-L4			1	20	1	12				SPOOLING M. DRIVE AMP. LEFT	P01		
			1	20	40	33				SPOOLING MOTOR DRIVER	J01		1.820.759.00
			1	33	2	12				FROM GRP20, ELM01 (BASIS B. TD)	P01		
PWMPL-L5			1	20	1	14				SPOOLING M. DRIVE AMP. LEFT	P01		
			1	20	40	32				SPOOLING MOTOR DRIVER	J01		1.820.759.00
			1	33	2	14				FROM GRP20, ELM01 (BASIS B. TD)	P01		
PWMPL-L6			1	20	1	15				SPOOLING M. DRIVE AMP. LEFT	P01		
			1	20	40	31				SPOOLING MOTOR DRIVER	J01		1.820.759.00
			1	33	2	15				FROM GRP20, ELM01 (BASIS B. TD)	P01		

* WILLI STUDER AG * S I G N A L W I R E L I S T * 89/07/20 * 9:25 * P A G E 173 *

* * TAPE TRANSPORT & AUDIO MCH * * 89/04/19 - 00 *

SIGNAL NAME	COLOR	MI	ASY	GRP	ELM	PNT	S	LV	TYPE	DESCRIPTION OF ELEMENT		REMARK	ELEMENT NR.
PWMPR-H1			1	20	2	9				SPOOLING M. DRIVE AMP. RIGHT	P02		
			1	20	40	7				SPOOLING MOTOR DRIVER	J01		1.820.759.00
			1	29	5	9				FROM GRP20, ELM02 (BASIS B. TD)	P01		
			1	29	6	9				TO SPOOLING M. DRIVE AMP. RIGHT	P02		
			1	30	2	9				FROM GRP29, ELM06	P01		
PWMPR-H2			1	20	2	10				SPOOLING M. DRIVE AMP. RIGHT	P02		
			1	20	40	38				SPOOLING MOTOR DRIVER	J01		1.820.759.00
			1	29	5	10				FROM GRP20, ELM02 (BASIS B. TD)	P01		
			1	29	6	10				TO SPOOLING M. DRIVE AMP. RIGHT	P02		
			1	30	2	10				FROM GRP29, ELM06	P01		
PWMPR-L1			1	20	2	7				SPOOLING M. DRIVE AMP. RIGHT	P02		
			1	20	40	39				SPOOLING MOTOR DRIVER	J01		1.820.759.00
			1	29	5	7				FROM GRP20, ELM02 (BASIS B. TD)	P01		
			1	29	6	7				TO SPOOLING M. DRIVE AMP. RIGHT	P02		
			1	30	2	7				FROM GRP29, ELM06	P01		
PWMPR-L2			1	20	2	8				SPOOLING M. DRIVE AMP. RIGHT	P02		
			1	29	5	8				FROM GRP20, ELM02 (BASIS B. TD)	P01		
			1	29	6	8				TO SPOOLING M. DRIVE AMP. RIGHT	P02		
			1	30	2	8				FROM GRP29, ELM06	P01		
PWMPR-L3			1	20	2	11				SPOOLING M. DRIVE AMP. RIGHT	P02		
			1	20	40	8				SPOOLING MOTOR DRIVER	J01		1.820.759.00
			1	29	5	11				FROM GRP20, ELM02 (BASIS B. TD)	P01		
			1	29	6	11				TO SPOOLING M. DRIVE AMP. RIGHT	P02		
			1	30	2	11				FROM GRP29, ELM06	P01		
PWMPR-L4			1	20	2	12				SPOOLING M. DRIVE AMP. RIGHT	P02		
			1	20	40	37				SPOOLING MOTOR DRIVER	J01		1.820.759.00
			1	29	5	12				FROM GRP20, ELM02 (BASIS B. TD)	P01		
			1	29	6	12				TO SPOOLING M. DRIVE AMP. RIGHT	P02		
			1	30	2	12				FROM GRP29, ELM06	P01		
PWMPR-L5			1	20	2	14				SPOOLING M. DRIVE AMP. RIGHT	P02		
			1	20	40	36				SPOOLING MOTOR DRIVER	J01		1.820.759.00
			1	29	5	14				FROM GRP20, ELM02 (BASIS B. TD)	P01		
			1	29	6	14				TO SPOOLING M. DRIVE AMP. RIGHT	P02		
			1	30	2	14				FROM GRP29, ELM06	P01		
PWMPR-L6			1	20	2	15				SPOOLING M. DRIVE AMP. RIGHT	P02		
			1	20	40	10				SPOOLING MOTOR DRIVER	J01		1.820.759.00
			1	29	5	15				FROM GRP20, ELM02 (BASIS B. TD)	P01		
			1	29	6	15				TO SPOOLING M. DRIVE AMP. RIGHT	P02		
			1	30	2	15				FROM GRP29, ELM06	P01		
RCV-232			1	20	50	9				SMPTE/EBU INTERFACE	J11		1.820.751.00
READDATA			1	22	25	7B				FLOPPY DISK CONTROLLER	J10		1.820.726.00
			1	22	26	30				FLOPPY DISK CONNECTOR	P13		1.820.000.00
READY			1	22	25	5B				FLOPPY DISK CONTROLLER	J10		1.820.726.00

* WILLI STUDER AG * S I G N A L W I R E L I S T * 89/07/20 * 9:25 * P A G E 174 *

* * TAPE TRANSPORT & AUDIO MCH * * 89/04/19 - 00 *

SIGNAL NAME	COLOR	MI	ASY	GRP	ELM	PNT	S	LV	TYPE	DESCRIPTION OF ELEMENT		REMARK	ELEMENT NR.
RECEIVA			1	20	31	6				TO SMPTE/EBU CONNECTOR	P21		
			1	20	50	6				SMPTE/EBU INTERFACE	J11		1.820.751.00
			1	23	10	8				SERIAL REMOTE	J09		
			1	23	11	8				SERIAL REMOTE	J10		
			1	25	4	8			B	CONNECTOR SMPTE/EBU BUS	J04		
			1	25	5	8			B	CONNECTOR SMPTE/EBU BUS	J05		
RECEIVB			1	20	31	5				TO SMPTE/EBU CONNECTOR	P21		
			1	20	50	5				SMPTE/EBU INTERFACE	J11		1.820.751.00
			1	23	10	3				SERIAL REMOTE	J09		
			1	23	11	3				SERIAL REMOTE	J10		
			1	25	4	3			B	CONNECTOR SMPTE/EBU BUS	J04		
			1	25	5	3			B	CONNECTOR SMPTE/EBU BUS	J05		
RECEIVCM			1	20	31	7				TO SMPTE/EBU CONNECTOR	P21		
			1	20	50	7				SMPTE/EBU INTERFACE	J11		1.820.751.00
			1	23	10	4				SERIAL REMOTE	J09		
			1	23	11	4				SERIAL REMOTE	J10		
			1	25	4	4			B	CONNECTOR SMPTE/EBU BUS	J04		
			1	25	5	4			B	CONNECTOR SMPTE/EBU BUS	J05		
RECHH-01	1		2	1	4	11			A	RECORD HEAD, CH 01 TO 08	P04		
			3	1	4	10				RECORD AMPLIFIER, CH 1	J04		1.820.811.00
			3	1	34	2				RECORD HEAD, CH 1	J25		
RECHH-02	1		2	1	4	10			A	RECORD HEAD, CH 01 TO 08	P04		
			3	1	9	10				RECORD AMPLIFIER, CH 2	J09		1.820.811.00
			3	1	39	2				RECORD HEAD, CH 2	J30		
RECHH-03	1		2	1	4	9			A	RECORD HEAD, CH 01 TO 08	P04		
			3	1	14	10				RECORD AMPLIFIER, CH 3	J14		1.820.811.00
			3	1	44	2				RECORD HEAD, CH 3	J35		
RECHH-04	1		2	1	4	8			A	RECORD HEAD, CH 01 TO 08	P04		
			3	1	19	10				RECORD AMPLIFIER, CH 4	J19		1.820.811.00
			3	1	49	2				RECORD HEAD, CH 4	J40		
RECHH-05	1		2	1	4	7			A	RECORD HEAD, CH 01 TO 08	P04		
			3	2	4	10				RECORD AMPLIFIER, CH 5	J04		1.820.811.00
			3	2	34	2				RECORD HEAD, CH 5	J25		
RECHH-06	1		2	1	4	6			A	RECORD HEAD, CH 01 TO 08	P04		
			3	2	9	10				RECORD AMPLIFIER, CH 6	J09		1.820.811.00
			3	2	39	2				RECORD HEAD, CH 6	J30		
RECHH-07	1		2	1	4	5			A	RECORD HEAD, CH 01 TO 08	P04		
			3	2	14	10				RECORD AMPLIFIER, CH 7	J14		1.820.811.00
			3	2	44	2				RECORD HEAD, CH 7	J35		
RECHH-08	1		2	1	4	4			A	RECORD HEAD, CH 01 TO 08	P04		
			3	2	19	10				RECORD AMPLIFIER, CH 8	J19		1.820.811.00
			3	2	49	2				RECORD HEAD, CH 8	J40		
RECHH-09	1		2	1	5	11			A	RECORD HEAD, CH 09 TO 16	P05		
			4	1	4	10				RECORD AMPLIFIER, CH 9	J04		1.820.811.00
			4	1	34	2				RECORD HEAD, CH 9	J25		

* WILLI STUDER AG * S I G N A L W I R E L I S T * 89/07/20 * 9:25 * P A G E 175 *
* * TAPE TRANSPORT & AUDIO MCH * * 89/04/19 - 00 *

SIGNAL NAME	COLOR	MI	ASY	GRP	ELM	PNT	S	LV	TYPE	DESCRIPTION OF ELEMENT		REMARK	ELEMENT NR.
RECHH-10	1		2	1	5	10			A	RECORD HEAD, CH 09 TO 16	P05		
			4	1	9	10				RECORD AMPLIFIER, CH10	J09		1.820.811.00
			4	1	39	2				RECORD HEAD, CH10	J30		
RECHH-11	1		2	1	5	9			A	RECORD HEAD, CH 09 TO 16	P05		
			4	1	14	10				RECORD AMPLIFIER, CH11	J14		1.820.811.00
			4	1	44	2				RECORD HEAD, CH11	J35		
RECHH-12	1		2	1	5	8			A	RECORD HEAD, CH 09 TO 16	P05		
			4	1	19	10				RECORD AMPLIFIER, CH12	J19		1.820.811.00
			4	1	49	2				RECORD HEAD, CH12	J40		
RECHH-13	1		2	1	5	7			A	RECORD HEAD, CH 09 TO 16	P05		
			4	2	4	10				RECORD AMPLIFIER, CH13	J04		1.820.811.00
			4	2	34	2				RECORD HEAD, CH13	J25		
RECHH-14	1		2	1	5	6			A	RECORD HEAD, CH 09 TO 16	P05		
			4	2	9	10				RECORD AMPLIFIER, CH14	J09		1.820.811.00
			4	2	39	2				RECORD HEAD, CH14	J30		
RECHH-15	1		2	1	5	5			A	RECORD HEAD, CH 09 TO 16	P05		
			4	2	14	10				RECORD AMPLIFIER, CH15	J14		1.820.811.00
			4	2	44	2				RECORD HEAD, CH15	J35		
RECHH-16	1		2	1	5	4			A	RECORD HEAD, CH 09 TO 16	P05		
			4	2	19	10				RECORD AMPLIFIER, CH16	J19		1.820.811.00
			4	2	49	2				RECORD HEAD, CH16	J40		
RECHH-17	1		2	1	6	11			A	RECORD HEAD, CH 17 TO 24	P06		
			5	1	4	10				RECORD AMPLIFIER, CH17	J04		1.820.811.00
			5	1	34	2				RECORD HEAD, CH17	J25		
RECHH-18	1		2	1	6	10			A	RECORD HEAD, CH 17 TO 24	P06		
			5	1	9	10				RECORD AMPLIFIER, CH18	J09		1.820.811.00
			5	1	39	2				RECORD HEAD, CH18	J30		
RECHH-19	1		2	1	6	9			A	RECORD HEAD, CH 17 TO 24	P06		
			5	1	14	10				RECORD AMPLIFIER, CH19	J14		1.820.811.00
			5	1	44	2				RECORD HEAD, CH19	J35		
RECHH-20	1		2	1	6	8			A	RECORD HEAD, CH 17 TO 24	P06		
			5	1	19	10				RECORD AMPLIFIER, CH20	J19		1.820.811.00
			5	1	49	2				RECORD HEAD, CH20	J40		
RECHH-21	1		2	1	6	7			A	RECORD HEAD, CH 17 TO 24	P06		
			5	2	4	10				RECORD AMPLIFIER, CH21	J04		1.820.811.00
			5	2	34	2				RECORD HEAD, CH21	J25		
RECHH-22	1		2	1	6	6			A	RECORD HEAD, CH 17 TO 24	P06		
			5	2	9	10				RECORD AMPLIFIER, CH22	J09		1.820.811.00
			5	2	39	2				RECORD HEAD, CH22	J30		
RECHH-23	1		2	1	6	5			A	RECORD HEAD, CH 17 TO 24	P06		
			5	2	14	10				RECORD AMPLIFIER, CH23	J14		1.820.811.00
			5	2	44	2				RECORD HEAD, CH23	J35		

* WILLI STUDER AG * S I G N A L W I R E L I S T * 89/07/20 * 9:25 * P A G E 176 *
* * TAPE TRANSPORT & AUDIO MCH * * 89/04/19 - 00 *

SIGNAL NAME	COLOR	MI	ASY	GRP	ELM	PNT	S	LV	TYPE	DESCRIPTION OF ELEMENT		REMARK	ELEMENT NR.
RECHH-24	1		2	1	6	4			A	RECORD HEAD, CH 17 TO 24	P06		
			5	2	19	10				RECORD AMPLIFIER, CH24	J19		1.820.811.00
			5	2	49	2				RECORD HEAD, CH24	J40		
RECHL-01	0		2	1	4	24			A	RECORD HEAD, CH 01 TO 08	P04		
			3	1	4	9				RECORD AMPLIFIER, CH 1	J04		1.820.811.00
			3	1	34	1				RECORD HEAD, CH 1	J25		
RECHL-02	0		2	1	4	23			A	RECORD HEAD, CH 01 TO 08	P04		
			3	1	9	9				RECORD AMPLIFIER, CH 2	J09		1.820.811.00
			3	1	39	1				RECORD HEAD, CH 2	J30		
RECHL-03	0		2	1	4	22			A	RECORD HEAD, CH 01 TO 08	P04		
			3	1	14	9				RECORD AMPLIFIER, CH 3	J14		1.820.811.00
			3	1	44	1				RECORD HEAD, CH 3	J35		
RECHL-04	0		2	1	4	21			A	RECORD HEAD, CH 01 TO 08	P04		
			3	1	19	9				RECORD AMPLIFIER, CH 4	J19		1.820.811.00
			3	1	49	1				RECORD HEAD, CH 4	J40		
RECHL-05	0		2	1	4	20			A	RECORD HEAD, CH 01 TO 08	P04		
			3	2	4	9				RECORD AMPLIFIER, CH 5	J04		1.820.811.00
			3	2	34	1				RECORD HEAD, CH 5	J25		
RECHL-06	0		2	1	4	19			A	RECORD HEAD, CH 01 TO 08	P04		
			3	2	9	9				RECORD AMPLIFIER, CH 6	J09		1.820.811.00
			3	2	39	1				RECORD HEAD, CH 6	J30		
RECHL-07	0		2	1	4	18			A	RECORD HEAD, CH 01 TO 08	P04		
			3	2	14	9				RECORD AMPLIFIER, CH 7	J14		1.820.811.00
			3	2	44	1				RECORD HEAD, CH 7	J35		
RECHL-08	0		2	1	4	17			A	RECORD HEAD, CH 01 TO 08	P04		
			3	2	19	9				RECORD AMPLIFIER, CH 8	J19		1.820.811.00
			3	2	49	1				RECORD HEAD, CH 8	J40		
RECHL-09	0		2	1	5	24			A	RECORD HEAD, CH 09 TO 16	P05		
			4	1	4	9				RECORD AMPLIFIER, CH 9	J04		1.820.811.00
			4	1	34	1				RECORD HEAD, CH 9	J25		
RECHL-10	0		2	1	5	23			A	RECORD HEAD, CH 09 TO 16	P05		
			4	1	9	9				RECORD AMPLIFIER, CH10	J09		1.820.811.00
			4	1	39	1				RECORD HEAD, CH10	J30		
RECHL-11	0		2	1	5	22			A	RECORD HEAD, CH 09 TO 16	P05		
			4	1	14	9				RECORD AMPLIFIER, CH11	J14		1.820.811.00
			4	1	44	1				RECORD HEAD, CH11	J35		
RECHL-12	0		2	1	5	21			A	RECORD HEAD, CH 09 TO 16	P05		
			4	1	19	9				RECORD AMPLIFIER, CH12	J19		1.820.811.00
			4	1	49	1				RECORD HEAD, CH12	J40		
RECHL-13	0		2	1	5	20			A	RECORD HEAD, CH 09 TO 16	P05		
			4	2	4	9				RECORD AMPLIFIER, CH13	J04		1.820.811.00
			4	2	34	1				RECORD HEAD, CH13	J25		

* WILLI STUDER AG * S I G N A L W I R E L I S T * 89/07/20 * 9:25 * P A G E 177 *

* * TAPE TRANSPORT & AUDIO MCH * * 89/04/19 - 00 *

SIGNAL NAME	COLOR	MI	ASY	GRP	ELM	PNT	S	LV	TYPE	DESCRIPTION OF ELEMENT		REMARK	ELEMENT NR.
RECHL-14	0		2	1	5	19			A	RECORD HEAD, CH 09 TO 16	P05		
			4	2	9	9				RECORD AMPLIFIER, CH14	J09		1.820.811.00
			4	2	39	1				RECORD HEAD, CH14	J30		
RECHL-15	0		2	1	5	18			A	RECORD HEAD, CH 09 TO 16	P05		
			4	2	14	9				RECORD AMPLIFIER, CH15	J14		1.820.811.00
			4	2	44	1				RECORD HEAD, CH15	J35		
RECHL-16	0		2	1	5	17			A	RECORD HEAD, CH 09 TO 16	P05		
			4	2	19	9				RECORD AMPLIFIER, CH16	J19		1.820.811.00
			4	2	49	1				RECORD HEAD, CH16	J40		
RECHL-17	0		2	1	6	24			A	RECORD HEAD, CH 17 TO 24	P06		
			5	1	4	9				RECORD AMPLIFIER, CH17	J04		1.820.811.00
			5	1	34	1				RECORD HEAD, CH17	J25		
RECHL-18	0		2	1	6	23			A	RECORD HEAD, CH 17 TO 24	P06		
			5	1	9	9				RECORD AMPLIFIER, CH18	J09		1.820.811.00
			5	1	39	1				RECORD HEAD, CH18	J30		
RECHL-19	0		2	1	6	22			A	RECORD HEAD, CH 17 TO 24	P06		
			5	1	14	9				RECORD AMPLIFIER, CH19	J14		1.820.811.00
			5	1	44	1				RECORD HEAD, CH19	J35		
RECHL-20	0		2	1	6	21			A	RECORD HEAD, CH 17 TO 24	P06		
			5	1	19	9				RECORD AMPLIFIER, CH20	J19		1.820.811.00
			5	1	49	1				RECORD HEAD, CH20	J40		
RECHL-21	0		2	1	6	20			A	RECORD HEAD, CH 17 TO 24	P06		
			5	2	4	9				RECORD AMPLIFIER, CH21	J04		1.820.811.00
			5	2	34	1				RECORD HEAD, CH21	J25		
RECHL-22	0		2	1	6	19			A	RECORD HEAD, CH 17 TO 24	P06		
			5	2	9	9				RECORD AMPLIFIER, CH22	J09		1.820.811.00
			5	2	39	1				RECORD HEAD, CH22	J30		
RECHL-23	0		2	1	6	18			A	RECORD HEAD, CH 17 TO 24	P06		
			5	2	14	9				RECORD AMPLIFIER, CH23	J14		1.820.811.00
			5	2	44	1				RECORD HEAD, CH23	J35		
RECHL-24	0		2	1	6	17			A	RECORD HEAD, CH 17 TO 24	P06		
			5	2	19	9				RECORD AMPLIFIER, CH24	J19		1.820.811.00
			5	2	49	1				RECORD HEAD, CH24	J40		
RECIN-01			3	1	1	8				LINE AMPLIFIER, CH 1	J01		1.820.715.00
			3	1	2	12A				CONTROLLER INTERNAL NRS CH 1	J02		1.820.815.00
			3	1	4	1				RECORD AMPLIFIER, CH 1	J04		1.820.811.00
RECIN-02			3	1	6	8				LINE AMPLIFIER, CH 2	J06		1.820.715.00
			3	1	7	12A				CONTROLLER INTERNAL NRS CH 2	J07		1.820.815.00
			3	1	9	1				RECORD AMPLIFIER, CH 2	J09		1.820.811.00
RECIN-03			3	1	11	8				LINE AMPLIFIER, CH 3	J11		1.820.715.00
			3	1	12	12A				CONTROLLER INTERNAL NRS CH 3	J12		1.820.815.00
			3	1	14	1				RECORD AMPLIFIER, CH 3	J14		1.820.811.00

* WILLI STUDER AG * S I G N A L W I R E L I S T * 89/07/20 * 9:25 * P A G E 178 *

* * TAPE TRANSPORT & AUDIO MCH * * 89/04/19 - 00 *

SIGNAL NAME	COLOR	MI	ASY	GRP	ELM	PNT	S	LV	TYPE	DESCRIPTION OF ELEMENT		REMARK	ELEMENT NR.
RECIN-04			3	1	16	8				LINE AMPLIFIER, CH 4	J16		1.820.715.00
			3	1	17	12A				CONTROLLER INTERNAL NRS CH 4	J17		1.820.815.00
			3	1	19	1				RECORD AMPLIFIER, CH 4	J19		1.820.811.00
RECIN-05			3	2	1	8				LINE AMPLIFIER, CH 5	J01		1.820.715.00
			3	2	2	12A				CONTROLLER INTERNAL NRS CH 5	J02		1.820.815.00
			3	2	4	1				RECORD AMPLIFIER, CH 5	J04		1.820.811.00
RECIN-06			3	2	6	8				LINE AMPLIFIER, CH 6	J06		1.820.715.00
			3	2	7	12A				CONTROLLER INTERNAL NRS CH 6	J07		1.820.815.00
			3	2	9	1				RECORD AMPLIFIER, CH 6	J09		1.820.811.00
RECIN-07			3	2	11	8				LINE AMPLIFIER, CH 7	J11		1.820.715.00
			3	2	12	12A				CONTROLLER INTERNAL NRS CH 7	J12		1.820.815.00
			3	2	14	1				RECORD AMPLIFIER, CH 7	J14		1.820.811.00
RECIN-08			3	2	16	8				LINE AMPLIFIER, CH 8	J16		1.820.715.00
			3	2	17	12A				CONTROLLER INTERNAL NRS CH 8	J17		1.820.815.00
			3	2	19	1				RECORD AMPLIFIER, CH 8	J19		1.820.811.00
RECIN-09			4	1	1	8				LINE AMPLIFIER, CH 9	J01		1.820.715.00
			4	1	2	12A				CONTROLLER INTERNAL NRS CH 9	J02		1.820.815.00
			4	1	4	1				RECORD AMPLIFIER, CH 9	J04		1.820.811.00
RECIN-10			4	1	6	8				LINE AMPLIFIER, CH10	J06		1.820.715.00
			4	1	7	12A				CONTROLLER INTERNAL NRS CH10	J07		1.820.815.00
			4	1	9	1				RECORD AMPLIFIER, CH10	J09		1.820.811.00
RECIN-11			4	1	11	8				LINE AMPLIFIER, CH11	J11		1.820.715.00
			4	1	12	12A				CONTROLLER INTERNAL NRS CH11	J12		1.820.815.00
			4	1	14	1				RECORD AMPLIFIER, CH11	J14		1.820.811.00
RECIN-12			4	1	16	8				LINE AMPLIFIER, CH12	J16		1.820.715.00
			4	1	17	12A				CONTROLLER INTERNAL NRS CH12	J17		1.820.815.00
			4	1	19	1				RECORD AMPLIFIER, CH12	J19		1.820.811.00
RECIN-13			4	2	1	8				LINE AMPLIFIER, CH13	J01		1.820.715.00
			4	2	2	12A				CONTROLLER INTERNAL NRS CH13	J02		1.820.815.00
			4	2	4	1				RECORD AMPLIFIER, CH13	J04		1.820.811.00
RECIN-14			4	2	6	8				LINE AMPLIFIER, CH14	J06		1.820.715.00
			4	2	7	12A				CONTROLLER INTERNAL NRS CH14	J07		1.820.815.00
			4	2	9	1				RECORD AMPLIFIER, CH14	J09		1.820.811.00
RECIN-15			4	2	11	8				LINE AMPLIFIER, CH15	J11		1.820.715.00
			4	2	12	12A				CONTROLLER INTERNAL NRS CH15	J12		1.820.815.00
			4	2	14	1				RECORD AMPLIFIER, CH15	J14		1.820.811.00
RECIN-16			4	2	16	8				LINE AMPLIFIER, CH16	J16		1.820.715.00
			4	2	17	12A				CONTROLLER INTERNAL NRS CH16	J17		1.820.815.00
			4	2	19	1				RECORD AMPLIFIER, CH16	J19		1.820.811.00
RECIN-17			5	1	1	8				LINE AMPLIFIER, CH17	J01		1.820.715.00
			5	1	2	12A				CONTROLLER INTERNAL NRS CH17	J02		1.820.815.00
			5	1	4	1				RECORD AMPLIFIER, CH17	J04		1.820.811.00

* WILLI STUDER AG * S I G N A L W I R E L I S T * 89/07/20 * 9:25 * P A G E 179 *
* * TAPE TRANSPORT & AUDIO MCH * * 89/04/19 - 00 *

SIGNAL NAME	COLOR	MI	ASY	GRP	ELM	PNT	S	LV	TYPE	DESCRIPTION OF ELEMENT		REMARK	ELEMENT NR.
RECIN-18			5	1	6	8				LINE AMPLIFIER, CH18	J06		1.820.715.00
			5	1	7	12A				CONTROLLER INTERNAL NRS CH18	J07		1.820.815.00
			5	1	9	1				RECORD AMPLIFIER, CH18	J09		1.820.811.00
RECIN-19			5	1	11	8				LINE AMPLIFIER, CH19	J11		1.820.715.00
			5	1	12	12A				CONTROLLER INTERNAL NRS CH19	J12		1.820.815.00
			5	1	14	1				RECORD AMPLIFIER, CH19	J14		1.820.811.00
RECIN-20			5	1	16	8				LINE AMPLIFIER, CH20	J16		1.820.715.00
			5	1	17	12A				CONTROLLER INTERNAL NRS CH20	J17		1.820.815.00
			5	1	19	1				RECORD AMPLIFIER, CH20	J19		1.820.811.00
RECIN-21			5	2	1	8				LINE AMPLIFIER, CH21	J01		1.820.715.00
			5	2	2	12A				CONTROLLER INTERNAL NRS CH21	J02		1.820.815.00
			5	2	4	1				RECORD AMPLIFIER, CH21	J04		1.820.811.00
RECIN-22			5	2	6	8				LINE AMPLIFIER, CH22	J06		1.820.715.00
			5	2	7	12A				CONTROLLER INTERNAL NRS CH22	J07		1.820.815.00
			5	2	9	1				RECORD AMPLIFIER, CH22	J09		1.820.811.00
RECIN-23			5	2	11	8				LINE AMPLIFIER, CH23	J11		1.820.715.00
			5	2	12	12A				CONTROLLER INTERNAL NRS CH23	J12		1.820.815.00
			5	2	14	1				RECORD AMPLIFIER, CH23	J14		1.820.811.00
RECIN-24			5	2	16	8				LINE AMPLIFIER, CH24	J16		1.820.715.00
			5	2	17	12A				CONTROLLER INTERNAL NRS CH24	J17		1.820.815.00
			5	2	19	1				RECORD AMPLIFIER, CH24	J19		1.820.811.00
REFLEV			1	21	22	13				GENERATOR UNIT MCH	J07		1.820.725.00
			1	21	50	9				TO AUDIO RACK CH 1 TO 8	P10		
			1	21	51	9				TO AUDIO RACK CH 9 TO 16	P11		
			1	21	52	9				TO AUDIO RACK CH 17 TO 24	P12		
			1	22	22	13				GENERATOR UNIT MCH	J07		1.820.725.00
			1	22	50	9				TO AUDIO RACK CH 1 TO 8	P10		
			1	22	51	9				TO AUDIO RACK CH 9 TO 16	P11		
			1	22	52	9				TO AUDIO RACK CH 17 TO 24	P12		
			3	1	2	20A				CONTROLLER INTERNAL NRS CH 1	J02		1.820.815.00
			3	1	7	20A				CONTROLLER INTERNAL NRS CH 2	J07		1.820.815.00
			3	1	12	20A				CONTROLLER INTERNAL NRS CH 3	J12		1.820.815.00
			3	1	17	20A				CONTROLLER INTERNAL NRS CH 4	J17		1.820.815.00
			3	1	70	9					P01		
			3	2	2	20A				CONTROLLER INTERNAL NRS CH 5	J02		1.820.815.00
			3	2	7	20A				CONTROLLER INTERNAL NRS CH 6	J07		1.820.815.00
			3	2	12	20A				CONTROLLER INTERNAL NRS CH 7	J12		1.820.815.00
			3	2	17	20A				CONTROLLER INTERNAL NRS CH 8	J17		1.820.815.00
			3	2	70	9					P01		
			4	1	2	20A				CONTROLLER INTERNAL NRS CH 9	J02		1.820.815.00
			4	1	7	20A				CONTROLLER INTERNAL NRS CH10	J07		1.820.815.00
			4	1	12	20A				CONTROLLER INTERNAL NRS CH11	J12		1.820.815.00
			4	1	17	20A				CONTROLLER INTERNAL NRS CH12	J17		1.820.815.00
			4	1	70	9					P01		
			4	2	2	20A				CONTROLLER INTERNAL NRS CH13	J02		1.820.815.00
			4	2	7	20A				CONTROLLER INTERNAL NRS CH14	J07		1.820.815.00
			4	2	12	20A				CONTROLLER INTERNAL NRS CH15	J12		1.820.815.00
			4	2	17	20A				CONTROLLER INTERNAL NRS CH16	J17		1.820.815.00

* WILLI STUDER AG * S I G N A L W I R E L I S T * 89/07/20 * 9:25 * P A G E 180 *
* * TAPE TRANSPORT & AUDIO MCH * * 89/04/19 - 00 *

SIGNAL NAME	COLOR	MI	ASY	GRP	ELM	PNT	S	LV	TYPE	DESCRIPTION OF ELEMENT		REMARK	ELEMENT NR.
<<-- CONT.OF			4	2	70	9					P01		
REFLEV			5	1	2	20A				CONTROLLER INTERNAL NRS CH17	J02		1.820.815.00
			5	1	7	20A				CONTROLLER INTERNAL NRS CH18	J07		1.820.815.00
			5	1	12	20A				CONTROLLER INTERNAL NRS CH19	J12		1.820.815.00
			5	1	17	20A				CONTROLLER INTERNAL NRS CH20	J17		1.820.815.00
			5	1	70	9					P01		
			5	2	2	20A				CONTROLLER INTERNAL NRS CH21	J02		1.820.815.00
			5	2	7	20A				CONTROLLER INTERNAL NRS CH22	J07		1.820.815.00
			5	2	12	20A				CONTROLLER INTERNAL NRS CH23	J12		1.820.815.00
			5	2	17	20A				CONTROLLER INTERNAL NRS CH24	J17		1.820.815.00
			5	2	70	9					P01		
REPHH-01	1		2	1	7	11			A	REPRODUCE HEAD, CH 01 TO 08	P07		
			2	2	1	11				INPUT	J01		
REPHH-02	1		2	1	7	10			A	REPRODUCE HEAD, CH 01 TO 08	P07		
			2	2	1	10				INPUT	J01		
REPHH-03	1		2	1	7	9			A	REPRODUCE HEAD, CH 01 TO 08	P07		
			2	2	1	9				INPUT	J01		
REPHH-04	1		2	1	7	8			A	REPRODUCE HEAD, CH 01 TO 08	P07		
			2	2	1	8				INPUT	J01		
REPHH-05	1		2	1	7	7			A	REPRODUCE HEAD, CH 01 TO 08	P07		
			2	2	1	7				INPUT	J01		
REPHH-06	1		2	1	7	6			A	REPRODUCE HEAD, CH 01 TO 08	P07		
			2	2	1	6				INPUT	J01		
REPHH-07	1		2	1	7	5			A	REPRODUCE HEAD, CH 01 TO 08	P07		
			2	2	1	5				INPUT	J01		
REPHH-08	1		2	1	7	4			A	REPRODUCE HEAD, CH 01 TO 08	P07		
			2	2	1	4				INPUT	J01		
REPHH-09	1		2	1	8	11			A	REPRODUCE HEAD, CH 09 TO 16	P08		
			2	3	1	11				INPUT	J01		
REPHH-10	1		2	1	8	10			A	REPRODUCE HEAD, CH 09 TO 16	P08		
			2	3	1	10				INPUT	J01		
REPHH-11	1		2	1	8	9			A	REPRODUCE HEAD, CH 09 TO 16	P08		
			2	3	1	9				INPUT	J01		
REPHH-12	1		2	1	8	8			A	REPRODUCE HEAD, CH 09 TO 16	P08		
			2	3	1	8				INPUT	J01		
REPHH-13	1		2	1	8	7			A	REPRODUCE HEAD, CH 09 TO 16	P08		
			2	3	1	7				INPUT	J01		
REPHH-14	1		2	1	8	6			A	REPRODUCE HEAD, CH 09 TO 16	P08		
			2	3	1	6				INPUT	J01		

```
*    WILLI STUDER AG    *    S I G N A L    W I R E    L I S T              * 89/07/20  *   9:25  *  P A G E 181   *
*                              * TAPE TRANSPORT & AUDIO MCH *                 * 89/04/19 - 00                        *
```

SIGNAL NAME	COLOR	MI	ASY	GRP	ELM	PNT	S	LV	TYPE	DESCRIPTION OF ELEMENT		REMARK	ELEMENT NR.
REPHH-15	1		2	1	8	5			A	REPRODUCE HEAD, CH 09 TO 16	P08		
			2	3	1	5				INPUT	J01		
REPHH-16	1		2	1	8	4			A	REPRODUCE HEAD, CH 09 TO 16	P08		
			2	3	1	4				INPUT	J01		
REPHH-17	1		2	1	9	11			A	REPRODUCE HEAD, CH 17 TO 24	P09		
			2	4	1	11				INPUT	J01		
REPHH-18	1		2	1	9	10			A	REPRODUCE HEAD, CH 17 TO 24	P09		
			2	4	1	10				INPUT	J01		
REPHH-19	1		2	1	9	9			A	REPRODUCE HEAD, CH 17 TO 24	P09		
			2	4	1	9				INPUT	J01		
REPHH-20	1		2	1	9	8			A	REPRODUCE HEAD, CH 17 TO 24	P09		
			2	4	1	8				INPUT	J01		
REPHH-21	1		2	1	9	7			A	REPRODUCE HEAD, CH 17 TO 24	P09		
			2	4	1	7				INPUT	J01		
REPHH-22	1		2	1	9	6			A	REPRODUCE HEAD, CH 17 TO 24	P09		
			2	4	1	6				INPUT	J01		
REPHH-23	1		2	1	9	5			A	REPRODUCE HEAD, CH 17 TO 24	P09		
			2	4	1	5				INPUT	J01		
REPHH-24	1		2	1	9	4			A	REPRODUCE HEAD, CH 17 TO 24	P09		
			2	4	1	4				INPUT	J01		
REPHL-01	0		2	1	7	24			A	REPRODUCE HEAD, CH 01 TO 08	P07		
			2	2	1	24				INPUT	J01		
REPHL-02	0		2	1	7	23			A	REPRODUCE HEAD, CH 01 TO 08	P07		
			2	2	1	23				INPUT	J01		
REPHL-03	0		2	1	7	22			A	REPRODUCE HEAD, CH 01 TO 08	P07		
			2	2	1	22				INPUT	J01		
REPHL-04	0		2	1	7	21			A	REPRODUCE HEAD, CH 01 TO 08	P07		
			2	2	1	21				INPUT	J01		
REPHL-05	0		2	1	7	20			A	REPRODUCE HEAD, CH 01 TO 08	P07		
			2	2	1	20				INPUT	J01		
REPHL-06	0		2	1	7	19			A	REPRODUCE HEAD, CH 01 TO 08	P07		
			2	2	1	19				INPUT	J01		
REPHL-07	0		2	1	7	18			A	REPRODUCE HEAD, CH 01 TO 08	P07		
			2	2	1	18				INPUT	J01		
REPHL-08	0		2	1	7	17			A	REPRODUCE HEAD, CH 01 TO 08	P07		
			2	2	1	17				INPUT	J01		
REPHL-09	0		2	1	8	24			A	REPRODUCE HEAD, CH 09 TO 16	P08		
			2	3	1	24				INPUT	J01		

```
*    WILLI STUDER AG    *    S I G N A L    W I R E    L I S T              * 89/07/20  *   9:25  *  P A G E 182   *
*                              * TAPE TRANSPORT & AUDIO MCH *                 * 89/04/19 - 00                        *
```

SIGNAL NAME	COLOR	MI	ASY	GRP	ELM	PNT	S	LV	TYPE	DESCRIPTION OF ELEMENT		REMARK	ELEMENT NR.
REPHL-10	0		2	1	8	23			A	REPRODUCE HEAD, CH 09 TO 16	P08		
			2	3	1	23				INPUT	J01		
REPHL-11	0		2	1	8	22			A	REPRODUCE HEAD, CH 09 TO 16	P08		
			2	3	1	22				INPUT	J01		
REPHL-12	0		2	1	8	21			A	REPRODUCE HEAD, CH 09 TO 16	P08		
			2	3	1	21				INPUT	J01		
REPHL-13	0		2	1	8	20			A	REPRODUCE HEAD, CH 09 TO 16	P08		
			2	3	1	20				INPUT	J01		
REPHL-14	0		2	1	8	19			A	REPRODUCE HEAD, CH 09 TO 16	P08		
			2	3	1	19				INPUT	J01		
REPHL-15	0		2	1	8	18			A	REPRODUCE HEAD, CH 09 TO 16	P08		
			2	3	1	18				INPUT	J01		
REPHL-16	0		2	1	8	17			A	REPRODUCE HEAD, CH 09 TO 16	P08		
			2	3	1	17				INPUT	J01		
REPHL-17	0		2	1	9	24			A	REPRODUCE HEAD, CH 17 TO 24	P09		
			2	4	1	24				INPUT	J01		
REPHL-18	0		2	1	9	23			A	REPRODUCE HEAD, CH 17 TO 24	P09		
			2	4	1	23				INPUT	J01		
REPHL-19	0		2	1	9	22			A	REPRODUCE HEAD, CH 17 TO 24	P09		
			2	4	1	22				INPUT	J01		
REPHL-20	0		2	1	9	21			A	REPRODUCE HEAD, CH 17 TO 24	P09		
			2	4	1	21				INPUT	J01		
REPHL-21	0		2	1	9	20			A	REPRODUCE HEAD, CH 17 TO 24	P09		
			2	4	1	20				INPUT	J01		
REPHL-22	0		2	1	9	19			A	REPRODUCE HEAD, CH 17 TO 24	P09		
			2	4	1	19				INPUT	J01		
REPHL-23	0		2	1	9	18			A	REPRODUCE HEAD, CH 17 TO 24	P09		
			2	4	1	18				INPUT	J01		
REPHL-24	0		2	1	9	17			A	REPRODUCE HEAD, CH 17 TO 24	P09		
			2	4	1	17				INPUT	J01		
REPRE-01			2	2	2	11				OUTPUT	P01		
			3	1	3	6				REPRODUCE AMPLIFIER, CH 1	J03		1.820.710.00
			3	1	33	1				REPRODUCE PREAMPLIFIER, CH 1	J24		
REPRE-02			2	2	2	10				OUTPUT	P01		
			3	1	8	6				REPRODUCE AMPLIFIER, CH 2	J08		1.820.710.00
			3	1	38	1				REPRODUCE PREAMPLIFIER, CH 2	J29		
REPRE-03			2	2	2	9				OUTPUT	P01		
			3	1	13	6				REPRODUCE AMPLIFIER, CH 3	J13		1.820.710.00
			3	1	43	1				REPRODUCE PREAMPLIFIER, CH 3	J34		

* WILLI STUDER AG * S I G N A L W I R E L I S T * 89/07/20 * 9:25 * P A G E 183 *
* * TAPE TRANSPORT & AUDIO MCH * * 89/04/19 - 00 *

SIGNAL NAME	COLOR	MI	ASY	GRP	ELM	PNT	S	LV	TYPE	DESCRIPTION OF ELEMENT		REMARK	ELEMENT NR.
REPRE-04			2	2	2	8				OUTPUT	P01		
			3	1	18	6				REPRODUCE AMPLIFIER, CH 4	J18		1.820.710.00
			3	1	48	1				REPRODUCE PREAMPLIFIER, CH 4	J39		
REPRE-05			2	2	2	7				OUTPUT	P01		
			3	2	3	6				REPRODUCE AMPLIFIER, CH 5	J03		1.820.710.00
			3	2	33	1				REPRODUCE PREAMPLIFIER, CH 5	J24		
REPRE-06			2	2	2	6				OUTPUT	P01		
			3	2	8	6				REPRODUCE AMPLIFIER, CH 6	J08		1.820.710.00
			3	2	38	1				REPRODUCE PREAMPLIFIER, CH 6	J29		
REPRE-07			2	2	2	5				OUTPUT	P01		
			3	2	13	6				REPRODUCE AMPLIFIER, CH 7	J13		1.820.710.00
			3	2	43	1				REPRODUCE PREAMPLIFIER, CH 7	J34		
REPRE-08			2	2	2	4				OUTPUT	P01		
			3	2	18	6				REPRODUCE AMPLIFIER, CH 8	J18		1.820.710.00
			3	2	48	1				REPRODUCE PREAMPLIFIER, CH 8	J39		
REPRE-09			2	3	2	11				OUTPUT	P01		
			4	1	3	6				REPRODUCE AMPLIFIER, CH 9	J03		1.820.710.00
			4	1	33	1				REPRODUCE PREAMPLIFIER, CH 9	J24		
REPRE-10			2	3	2	10				OUTPUT	P01		
			4	1	8	6				REPRODUCE AMPLIFIER, CH10	J08		1.820.710.00
			4	1	38	1				REPRODUCE PREAMPLIFIER, CH10	J29		
REPRE-11			2	3	2	9				OUTPUT	P01		
			4	1	13	6				REPRODUCE AMPLIFIER, CH11	J13		1.820.710.00
			4	1	43	1				REPRODUCE PREAMPLIFIER, CH11	J34		
REPRE-12			2	3	2	8				OUTPUT	P01		
			4	1	18	6				REPRODUCE AMPLIFIER, CH12	J18		1.820.710.00
			4	1	48	1				REPRODUCE PREAMPLIFIER, CH12	J39		
REPRE-13			2	3	2	7				OUTPUT	P01		
			4	2	3	6				REPRODUCE AMPLIFIER, CH13	J03		1.820.710.00
			4	2	33	1				REPRODUCE PREAMPLIFIER, CH13	J24		
REPRE-14			2	3	2	6				OUTPUT	P01		
			4	2	8	6				REPRODUCE AMPLIFIER, CH14	J08		1.820.710.00
			4	2	38	1				REPRODUCE PREAMPLIFIER, CH14	J29		
REPRE-15			2	3	2	5				OUTPUT	P01		
			4	2	13	6				REPRODUCE AMPLIFIER, CH15	J13		1.820.710.00
			4	2	43	1				REPRODUCE PREAMPLIFIER, CH15	J34		
REPRE-16			2	3	2	4				OUTPUT	P01		
			4	2	18	6				REPRODUCE AMPLIFIER, CH16	J18		1.820.710.00
			4	2	48	1				REPRODUCE PREAMPLIFIER, CH16	J39		
REPRE-17			2	4	2	11				OUTPUT	P01		
			5	1	3	6				REPRODUCE AMPLIFIER, CH17	J03		1.820.710.00
			5	1	33	1				REPRODUCE PREAMPLIFIER, CH17	J24		

* WILLI STUDER AG * S I G N A L W I R E L I S T * 89/07/20 * 9:25 * P A G E 184 *
* * TAPE TRANSPORT & AUDIO MCH * * 89/04/19 - 00 *

SIGNAL NAME	COLOR	MI	ASY	GRP	ELM	PNT	S	LV	TYPE	DESCRIPTION OF ELEMENT		REMARK	ELEMENT NR.
REPRE-18			2	4	2	10				OUTPUT	P01		
			5	1	8	6				REPRODUCE AMPLIFIER, CH18	J08		1.820.710.00
			5	1	38	1				REPRODUCE PREAMPLIFIER, CH18	J29		
REPRE-19			2	4	2	9				OUTPUT	P01		
			5	1	13	6				REPRODUCE AMPLIFIER, CH19	J13		1.820.710.00
			5	1	43	1				REPRODUCE PREAMPLIFIER, CH19	J34		
REPRE-20			2	4	2	8				OUTPUT	P01		
			5	1	18	6				REPRODUCE AMPLIFIER, CH20	J18		1.820.710.00
			5	1	48	1				REPRODUCE PREAMPLIFIER, CH20	J39		
REPRE-21			2	4	2	7				OUTPUT	P01		
			5	2	3	6				REPRODUCE AMPLIFIER, CH21	J03		1.820.710.00
			5	2	33	1				REPRODUCE PREAMPLIFIER, CH21	J24		
REPRE-22			2	4	2	6				OUTPUT	P01		
			5	2	8	6				REPRODUCE AMPLIFIER, CH22	J08		1.820.710.00
			5	2	38	1				REPRODUCE PREAMPLIFIER, CH22	J29		
REPRE-23			2	4	2	5				OUTPUT	P01		
			5	2	13	6				REPRODUCE AMPLIFIER, CH23	J13		1.820.710.00
			5	2	43	1				REPRODUCE PREAMPLIFIER, CH23	J34		
REPRE-24			2	4	2	4				OUTPUT	P01		
			5	2	18	6				REPRODUCE AMPLIFIER, CH24	J18		1.820.710.00
			5	2	48	1				REPRODUCE PREAMPLIFIER, CH24	J39		
REPRO-01			2	2	2	24				OUTPUT	P01		
			3	1	3	7				REPRODUCE AMPLIFIER, CH 1	J03		1.820.710.00
			3	1	33	2				REPRODUCE PREAMPLIFIER, CH 1	J24		
REPRO-02			2	2	2	23				OUTPUT	P01		
			3	1	8	7				REPRODUCE AMPLIFIER, CH 2	J08		1.820.710.00
			3	1	38	2				REPRODUCE PREAMPLIFIER, CH 2	J29		
REPRO-03			2	2	2	22				OUTPUT	P01		
			3	1	13	7				REPRODUCE AMPLIFIER, CH 3	J13		1.820.710.00
			3	1	43	2				REPRODUCE PREAMPLIFIER, CH 3	J34		
REPRO-04			2	2	2	21				OUTPUT	P01		
			3	1	18	7				REPRODUCE AMPLIFIER, CH 4	J18		1.820.710.00
			3	1	48	2				REPRODUCE PREAMPLIFIER, CH 4	J39		
REPRO-05			2	2	2	20				OUTPUT	P01		
			3	2	3	7				REPRODUCE AMPLIFIER, CH 5	J03		1.820.710.00
			3	2	33	2				REPRODUCE PREAMPLIFIER, CH 5	J24		
REPRO-06			2	2	2	19				OUTPUT	P01		
			3	2	8	7				REPRODUCE AMPLIFIER, CH 6	J08		1.820.710.00
			3	2	38	2				REPRODUCE PREAMPLIFIER, CH 6	J29		
REPRO-07			2	2	2	18				OUTPUT	P01		
			3	2	13	7				REPRODUCE AMPLIFIER, CH 7	J13		1.820.710.00
			3	2	43	2				REPRODUCE PREAMPLIFIER, CH 7	J34		

```
*****************************************************************************************************************************
*    WILLI STUDER AG    *    S I G N A L     W I R E     L I S T                  * 89/07/20  *   9:25  *   P A G E 185    *
*****************************************************************************************************************************
*                            * TAPE TRANSPORT & AUDIO MCH *                      *  89/04/19 - 00                          *
*****************************************************************************************************************************
```

SIGNAL NAME	COLOR	MI	ASY	GRP	ELM	PNT	S	LV	TYPE	DESCRIPTION OF ELEMENT		REMARK	ELEMENT NR.
REPRO-08			2	2	2	17				OUTPUT	P01		
			3	2	18	7				REPRODUCE AMPLIFIER, CH 8	J18		1.820.710.00
			3	2	48	2				REPRODUCE PREAMPLIFIER, CH 8	J39		
REPRO-09			2	3	2	24				OUTPUT	P01		
			4	1	3	7				REPRODUCE AMPLIFIER, CH 9	J03		1.820.710.00
			4	1	33	2				REPRODUCE PREAMPLIFIER, CH 9	J24		
REPRO-10			2	3	2	23				OUTPUT	P01		
			4	1	8	7				REPRODUCE AMPLIFIER, CH10	J08		1.820.710.00
			4	1	38	2				REPRODUCE PREAMPLIFIER, CH10	J29		
REPRO-11			2	3	2	22				OUTPUT	P01		
			4	1	13	7				REPRODUCE AMPLIFIER, CH11	J13		1.820.710.00
			4	1	43	2				REPRODUCE PREAMPLIFIER, CH11	J34		
REPRO-12			2	3	2	21				OUTPUT	P01		
			4	1	18	7				REPRODUCE AMPLIFIER, CH12	J18		1.820.710.00
			4	1	48	2				REPRODUCE PREAMPLIFIER, CH12	J39		
REPRO-13			2	3	2	20				OUTPUT	P01		
			4	2	3	7				REPRODUCE AMPLIFIER, CH13	J03		1.820.710.00
			4	2	33	2				REPRODUCE PREAMPLIFIER, CH13	J24		
REPRO-14			2	3	2	19				OUTPUT	P01		
			4	2	8	7				REPRODUCE AMPLIFIER, CH14	J08		1.820.710.00
			4	2	38	2				REPRODUCE PREAMPLIFIER, CH14	J29		
REPRO-15			2	3	2	18				OUTPUT	P01		
			4	2	13	7				REPRODUCE AMPLIFIER, CH15	J13		1.820.710.00
			4	2	43	2				REPRODUCE PREAMPLIFIER, CH15	J34		
REPRO-16			2	3	2	17				OUTPUT	P01		
			4	2	18	7				REPRODUCE AMPLIFIER, CH16	J18		1.820.710.00
			4	2	48	2				REPRODUCE PREAMPLIFIER, CH16	J39		
REPRO-17			2	4	2	24				OUTPUT	P01		
			5	1	3	7				REPRODUCE AMPLIFIER, CH17	J03		1.820.710.00
			5	1	33	2				REPRODUCE PREAMPLIFIER, CH17	J24		
REPRO-18			2	4	2	23				OUTPUT	P01		
			5	1	8	7				REPRODUCE AMPLIFIER, CH18	J08		1.820.710.00
			5	1	38	2				REPRODUCE PREAMPLIFIER, CH18	J29		
REPRO-19			2	4	2	22				OUTPUT	P01		
			5	1	13	7				REPRODUCE AMPLIFIER, CH19	J13		1.820.710.00
			5	1	43	2				REPRODUCE PREAMPLIFIER, CH19	J34		
REPRO-20			2	4	2	21				OUTPUT	P01		
			5	1	18	7				REPRODUCE AMPLIFIER, CH20	J18		1.820.710.00
			5	1	48	2				REPRODUCE PREAMPLIFIER, CH20	J39		
REPRO-21			2	4	2	20				OUTPUT	P01		
			5	2	3	7				REPRODUCE AMPLIFIER, CH21	J03		1.820.710.00
			5	2	33	2				REPRODUCE PREAMPLIFIER, CH21	J24		

```
*****************************************************************************************************************************
*    WILLI STUDER AG    *    S I G N A L     W I R E     L I S T                  * 89/07/20  *   9:25  *   P A G E 186    *
*****************************************************************************************************************************
*                            * TAPE TRANSPORT & AUDIO MCH *                      *  89/04/19 - 00                          *
*****************************************************************************************************************************
```

SIGNAL NAME	COLOR	MI	ASY	GRP	ELM	PNT	S	LV	TYPE	DESCRIPTION OF ELEMENT		REMARK	ELEMENT NR.
REPRO-22			2	4	2	19				OUTPUT	P01		
			5	2	8	7				REPRODUCE AMPLIFIER, CH22	J08		1.820.710.00
			5	2	38	2				REPRODUCE PREAMPLIFIER, CH22	J29		
REPRO-23			2	4	2	18				OUTPUT	P01		
			5	2	13	7				REPRODUCE AMPLIFIER, CH23	J13		1.820.710.00
			5	2	43	2				REPRODUCE PREAMPLIFIER, CH23	J34		
REPRO-24			2	4	2	17				OUTPUT	P01		
			5	2	18	7				REPRODUCE AMPLIFIER, CH24	J18		1.820.710.00
			5	2	48	2				REPRODUCE PREAMPLIFIER, CH24	J39		
RESERVE			1	35	22	9			BX	AUDIO RACK CH 1 TO 8	J01		
			1	35	23	9			BX	AUDIO RACK CH 9 TO 16	J02		
			1	35	24	9			BX	AUDIO RACK CH 17 TO 24	J03		
			2	2	2	13				OUTPUT	P01		
			2	2	2	25				OUTPUT	P01		
			2	3	2	13				OUTPUT	P01		
			2	3	2	25				OUTPUT	P01		
			2	4	2	13				OUTPUT	P01		
			2	4	2	25				OUTPUT	P01		
			3	3	2	9			BX	SUPPLY ASY03, GRP01	J02		
			3	3	3	9			BX	SUPPLY ASY03, GRP02	J03		
			3	3	4	9			BX	SUPPLY CONNECTOR	J04		
			3	3	5	9			BX	SUPPLY ASY03, GRP04 (NRS OPTION)	J05		
			3	4	10	9			AX	TO GRP03, ELM05	P10		
			4	3	2	9			BX	SUPPLY ASY04, GRP01	J02		
			4	3	3	9			BX	SUPPLY ASY04, GRP02	J03		
			4	3	4	9			BX	SUPPLY CONNECTOR	J04		
			4	3	5	9			BX	SUPPLY ASY04, GRP04 (NRS OPTION)	J05		
			4	4	19	9			AX	FROM GRP03, ELM05 (DISTR. B)	P09		
			5	3	2	9			BX	SUPPLY ASY05, GRP01	J02		
			5	3	3	9			BX	SUPPLY ASY05, GRP02	J03		
			5	3	4	9			BX	SUPPLY CONNECTOR	J04		
			5	3	5	9			BX	SUPPLY ASY05, GRP04 (NRS OPTION)	J05		
			5	4	19	9			AX	FROM GRP03, ELM05 (DISTR. B)	P09		
RESERVE1	3		1	35	25	1			U	WIRE FIELD			
			1	35	25	2				WIRE FIELD			
			1	35	25	3				WIRE FIELD			
			1	35	25	4				WIRE FIELD			
	3		1	35	59	3			M	TO GRP20, ELM70	P10		
RESERVE2	0		1	35	26	1			U	WIRE FIELD			
			1	35	26	2				WIRE FIELD			
			1	35	26	3				WIRE FIELD			
			1	35	26	4				WIRE FIELD			
	0		1	35	59	22			M	TO GRP20, ELM70	P10		
RESERVE3			1	35	27	1				WIRE FIELD			
			1	35	27	2				WIRE FIELD			
			1	35	27	3				WIRE FIELD			
			1	35	27	4				WIRE FIELD			
S-AIN-A			3	1	60	4				JUMPER SWITCH	JS01		

```
*    WILLI STUDER AG    *    S I G N A L    W I R E    L I S T                    * 89/07/20  *   9:25  *  P A G E 187   *
*                                * TAPE TRANSPORT & AUDIO MCH *                    * 89/04/19 - 00                      *
```

SIGNAL NAME	COLOR	MI	ASY	GRP	ELM	PNT	S	LV	TYPE	DESCRIPTION OF ELEMENT		REMARK	ELEMENT NR.
S-A1N-AB			3	1	21	3B				BUS CONVERTER	J21		1.820.717.00
			3	2	21	3B				BUS CONVERTER	J21		1.820.717.00
S-A1N-B			3	2	60	4				JUMPER SWITCH	JS01		
S-A1N-C			4	1	60	4				JUMPER SWITCH	JS01		
S-A1N-CD			4	1	21	3B				BUS CONVERTER	J21		1.820.717.00
			4	2	21	3B				BUS CONVERTER	J21		1.820.717.00
S-A1N-D			4	2	60	4				JUMPER SWITCH	JS01		
S-A1N-E			5	1	60	4				JUMPER SWITCH	JS01		
S-A1N-EF			5	1	21	3B				BUS CONVERTER	J21		1.820.717.00
			5	2	21	3B				BUS CONVERTER	J21		1.820.717.00
S-A1N-F			5	2	60	4				JUMPER SWITCH	JS01		
S-A1P-A			3	1	21	3A				BUS CONVERTER	J21		1.820.717.00
			3	1	60	2				JUMPER SWITCH	JS01		
S-A1P-B			3	2	21	3A				BUS CONVERTER	J21		1.820.717.00
			3	2	60	2				JUMPER SWITCH	JS01		
S-A1P-C			4	1	21	3A				BUS CONVERTER	J21		1.820.717.00
			4	1	60	2				JUMPER SWITCH	JS01		
S-A1P-D			4	2	21	3A				BUS CONVERTER	J21		1.820.717.00
			4	2	60	2				JUMPER SWITCH	JS01		
S-A1P-E			5	1	21	3A				BUS CONVERTER	J21		1.820.717.00
			5	1	60	2				JUMPER SWITCH	JS01		
S-A1P-F			5	2	21	3A				BUS CONVERTER	J21		1.820.717.00
			5	2	60	2				JUMPER SWITCH	JS01		
S-ENABLE	8		1	23	9	12			B	LOCAL CONTROL UNIT	J08		
SBCR	9		1	23	1	3			L	BICODE/PILOT	J01		
SBCS	4		1	23	1	2			L	BICODE/PILOT	J01		
SGNGND			1	21	22	12				GENERATOR UNIT MCH	J07		1.820.725.00
			1	21	50	8				TO AUDIO RACK CH 1 TO 8	P10		
			1	21	51	8				TO AUDIO RACK CH 9 TO 16	P11		
			1	21	52	8				TO AUDIO RACK CH 17 TO 24	P12		
			1	22	22	12				GENERATOR UNIT MCH	J07		1.820.725.00
			1	22	50	8				TO AUDIO RACK CH 1 TO 8	P10		
			1	22	51	8				TO AUDIO RACK CH 9 TO 16	P11		
			1	22	52	8				TO AUDIO RACK CH 17 TO 24	P12		
			3	1	2	19B				CONTROLLER INTERNAL NRS CH 1	J02		1.820.815.00
			3	1	7	19B				CONTROLLER INTERNAL NRS CH 2	J07		1.820.815.00
			3	1	12	19B				CONTROLLER INTERNAL NRS CH 3	J12		1.820.815.00
			3	1	17	19B				CONTROLLER INTERNAL NRS CH 4	J17		1.820.815.00

```
*    WILLI STUDER AG    *    S I G N A L    W I R E    L I S T                    * 89/07/20  *   9:25  *  P A G E 188   *
*                                * TAPE TRANSPORT & AUDIO MCH *                    * 89/04/19 - 00                      *
```

SIGNAL NAME	COLOR	MI	ASY	GRP	ELM	PNT	S	LV	TYPE	DESCRIPTION OF ELEMENT		REMARK	ELEMENT NR.
<<-- CONT.OF			3	1	70	8					P01		
SGNGND			3	2	2	19B				CONTROLLER INTERNAL NRS CH 5	J02		1.820.815.00
			3	2	7	19B				CONTROLLER INTERNAL NRS CH 6	J07		1.820.815.00
			3	2	12	19B				CONTROLLER INTERNAL NRS CH 7	J12		1.820.815.00
			3	2	17	19B				CONTROLLER INTERNAL NRS CH 8	J17		1.820.815.00
			3	2	70	8					P01		
			4	1	2	19B				CONTROLLER INTERNAL NRS CH 9	J02		1.820.815.00
			4	1	7	19B				CONTROLLER INTERNAL NRS CH10	J07		1.820.815.00
			4	1	12	19B				CONTROLLER INTERNAL NRS CH11	J12		1.820.815.00
			4	1	17	19B				CONTROLLER INTERNAL NRS CH12	J17		1.820.815.00
			4	1	70	8					P01		
			4	2	2	19B				CONTROLLER INTERNAL NRS CH13	J02		1.820.815.00
			4	2	7	19B				CONTROLLER INTERNAL NRS CH14	J07		1.820.815.00
			4	2	12	19B				CONTROLLER INTERNAL NRS CH15	J12		1.820.815.00
			4	2	17	19B				CONTROLLER INTERNAL NRS CH16	J17		1.820.815.00
			4	2	70	8					P01		
			5	1	2	19B				CONTROLLER INTERNAL NRS CH17	J02		1.820.815.00
			5	1	7	19B				CONTROLLER INTERNAL NRS CH18	J07		1.820.815.00
			5	1	12	19B				CONTROLLER INTERNAL NRS CH19	J12		1.820.815.00
			5	1	17	19B				CONTROLLER INTERNAL NRS CH20	J17		1.820.815.00
			5	1	70	8					P01		
			5	2	2	19B				CONTROLLER INTERNAL NRS CH21	J02		1.820.815.00
			5	2	7	19B				CONTROLLER INTERNAL NRS CH22	J07		1.820.815.00
			5	2	12	19B				CONTROLLER INTERNAL NRS CH23	J12		1.820.815.00
			5	2	17	19B				CONTROLLER INTERNAL NRS CH24	J17		1.820.815.00
			5	2	70	8					P01		
SHIELD	S		1	23	1	1			L	BICODE/PILOT	J01		
	S		1	23	2	1			L	SLAVE TC OUT	J02		
	S		1	23	3	1			L	SLAVE TC IN	J03		
	S		1	23	4	1			L	TC IN/PILOT	J04		
	S		1	23	5	1			L	BICODE	J05		
	S		1	23	6	1			L	MASTER TC OUT	P01		
	S		1	23	7	1			L	MASTER TC IN	J06		
	4		1	23	9	15			B	LOCAL CONTROL UNIT	J08		
			1	25	1	1			B	CONN. AUTOLOCATOR, REMOTE TIMER	J01		
			1	26	2	1				TO GRP25, ELM01 (REMOTE PANEL)	P02		
SIGN.GND			1	25	1	8			B	CONN. AUTOLOCATOR, REMOTE TIMER	J01		
			1	26	2	6				TO GRP25, ELM01 (REMOTE PANEL)	P02		
SND-232			1	20	50	14				SMPTE/EBU INTERFACE	J11		1.820.751.00
SPARE			1	20	31	9				TO SMPTE/EBU CONNECTOR	P21		
			1	23	10	5				SERIAL REMOTE	J09		
			1	23	11	5				SERIAL REMOTE	J10		
			1	25	4	5			B	CONNECTOR SMPTE/EBU BUS	J04		
			1	25	5	5			B	CONNECTOR SMPTE/EBU BUS	J05		
SR-FADRY			1	23	8	6			B	CONN. PARALLEL REMOTE CONTROL	J07		
			1	25	3	6			B	CONN. PARALLEL REMOTE CONTROL	J03		
			1	27	4	11				TO CONN. PARALLEL REMOTE CONTR.	P04		

```
*    WILLI STUDER AG    *    S I G N A L    W I R E    L I S T                    * 89/07/20 *  9:25 *  P A G E 189   *
*                                  * TAPE TRANSPORT & AUDIO MCH *                  * 89/04/19 - 00                    *
```

SIGNAL NAME	COLOR	MI	ASY	GRP	ELM	PNT	S	LV	TYPE	DESCRIPTION OF ELEMENT		REMARK	ELEMENT NR.
SR-FORW			1	23	8	21			B	CONN. PARALLEL REMOTE CONTROL	J07		
			1	25	2	21			B	CONNECTOR SYNCHRONIZER CONTROL	J02		
			1	25	3	21			B	CONN. PARALLEL REMOTE CONTROL	J03		
			1	27	3	16				TO GRP25, ELM02 (SYNCHRONIZER)	P03		
			1	27	4	16				TO CONN. PARALLEL REMOTE CONTR.	P04		
SR-LIFT			1	23	8	17			B	CONN. PARALLEL REMOTE CONTROL	J07		
			1	25	2	17			B	CONNECTOR SYNCHRONIZER CONTROL	J02		
			1	25	3	17			B	CONN. PARALLEL REMOTE CONTROL	J03		
			1	27	3	8				TO GRP25, ELM02 (SYNCHRONIZER)	P03		
			1	27	4	8				TO CONN. PARALLEL REMOTE CONTR.	P04		
SR-LOCST			1	23	8	18			B	CONN. PARALLEL REMOTE CONTROL	J07		
			1	25	3	18			B	CONN. PARALLEL REMOTE CONTROL	J03		
			1	27	4	10				TO CONN. PARALLEL REMOTE CONTR.	P04		
SR-MUTE			1	25	2	18			B	CONNECTOR SYNCHRONIZER CONTROL	J02		
			1	27	3	10				TO GRP25, ELM02 (SYNCHRONIZER)	P03		
SR-PLAY			1	23	8	22			B	CONN. PARALLEL REMOTE CONTROL	J07		
			1	25	2	22			B	CONNECTOR SYNCHRONIZER CONTROL	J02		
			1	25	3	22			B	CONN. PARALLEL REMOTE CONTROL	J03		
			1	26	3	3				TO PAR. REM. IF	J01		
			1	27	3	18				TO GRP25, ELM02 (SYNCHRONIZER)	P03		
			1	27	4	18				TO CONN. PARALLEL REMOTE CONTR.	P04		
			1	27	6	3					P05		54.99.0213
SR-REC			1	23	8	19			B	CONN. PARALLEL REMOTE CONTROL	J07		
			1	25	2	19			B	CONNECTOR SYNCHRONIZER CONTROL	J02		
			1	25	3	19			B	CONN. PARALLEL REMOTE CONTROL	J03		
	3		1	26	3	2				TO PAR. REM. IF	J01		
			1	27	3	12				TO GRP25, ELM02 (SYNCHRONIZER)	P03		
			1	27	4	12				TO CONN. PARALLEL REMOTE CONTR.	P04		
			1	27	6	2					P05		54.99.0213
SR-REHSL			1	25	2	6			B	CONNECTOR SYNCHRONIZER CONTROL	J02		
			1	27	3	11				TO GRP25, ELM02 (SYNCHRONIZER)	P03		
SR-RESET			1	23	8	10			B	CONN. PARALLEL REMOTE CONTROL	J07		
			1	25	3	10			B	CONN. PARALLEL REMOTE CONTROL	J03		
			1	27	4	19				TO CONN. PARALLEL REMOTE CONTR.	P04		
SR-REW			1	23	8	20			B	CONN. PARALLEL REMOTE CONTROL	J07		
			1	25	2	20			B	CONNECTOR SYNCHRONIZER CONTROL	J02		
			1	25	3	20			B	CONN. PARALLEL REMOTE CONTROL	J03		
			1	27	3	14				TO GRP25, ELM02 (SYNCHRONIZER)	P03		
			1	27	4	14				TO CONN. PARALLEL REMOTE CONTR.	P04		
SR-STOP			1	23	8	23			B	CONN. PARALLEL REMOTE CONTROL	J07		
			1	25	2	23			B	CONNECTOR SYNCHRONIZER CONTROL	J02		
			1	25	3	23			B	CONN. PARALLEL REMOTE CONTROL	J03		
			1	27	3	20				TO GRP25, ELM02 (SYNCHRONIZER)	P03		
			1	27	4	20				TO CONN. PARALLEL REMOTE CONTR.	P04		

```
*    WILLI STUDER AG    *    S I G N A L    W I R E    L I S T                    * 89/07/20 *  9:25 *  P A G E 190   *
*                                  * TAPE TRANSPORT & AUDIO MCH *                  * 89/04/19 - 00                    *
```

SIGNAL NAME	COLOR	MI	ASY	GRP	ELM	PNT	S	LV	TYPE	DESCRIPTION OF ELEMENT		REMARK	ELEMENT NR.
SR-VRSPD			1	23	8	5			B	CONN. PARALLEL REMOTE CONTROL	J07		
			1	25	2	5			B	CONNECTOR SYNCHRONIZER CONTROL	J02		
			1	25	3	5			B	CONN. PARALLEL REMOTE CONTROL	J03		
			1	27	3	9				TO GRP25, ELM02 (SYNCHRONIZER)	P03		
			1	27	4	9				TO CONN. PARALLEL REMOTE CONTR.	P04		
SR-OLOC			1	23	8	14			B	CONN. PARALLEL REMOTE CONTROL	J07		
			1	25	3	14			B	CONN. PARALLEL REMOTE CONTROL	J03		
			1	27	4	2				TO CONN. PARALLEL REMOTE CONTR.	P04		
STC1A	6		1	23	2	2			L	SLAVE TC OUT	J02		
	6		1	23	3	2			L	SLAVE TC IN	J03		
STC1B	9		1	23	2	3			L	SLAVE TC OUT	J02		
	9		1	23	3	3			L	SLAVE TC IN	J03		
STEP			1	22	25	12B				FLOPPY DISK CONTROLLER	J10		1.820.726.00
			1	22	26	20				FLOPPY DISK CONNECTOR	P13		1.820.000.00
SYNHH-01			3	1	3	13				REPRODUCE AMPLIFIER, CH 1	J03		1.820.710.00
			3	1	4	13				RECORD AMPLIFIER, CH 1	J04		1.820.811.00
SYNHH-02			3	1	8	13				REPRODUCE AMPLIFIER, CH 2	J08		1.820.710.00
			3	1	9	13				RECORD AMPLIFIER, CH 2	J09		1.820.811.00
SYNHH-03			3	1	13	13				REPRODUCE AMPLIFIER, CH 3	J13		1.820.710.00
			3	1	14	13				RECORD AMPLIFIER, CH 3	J14		1.820.811.00
SYNHH-04			3	1	18	13				REPRODUCE AMPLIFIER, CH 4	J18		1.820.710.00
			3	1	19	13				RECORD AMPLIFIER, CH 4	J19		1.820.811.00
SYNHH-05			3	2	3	13				REPRODUCE AMPLIFIER, CH 5	J03		1.820.710.00
			3	2	4	13				RECORD AMPLIFIER, CH 5	J04		1.820.811.00
SYNHH-06			3	2	8	13				REPRODUCE AMPLIFIER, CH 6	J08		1.820.710.00
			3	2	9	13				RECORD AMPLIFIER, CH 6	J09		1.820.811.00
SYNHH-07			3	2	13	13				REPRODUCE AMPLIFIER, CH 7	J13		1.820.710.00
			3	2	14	13				RECORD AMPLIFIER, CH 7	J14		1.820.811.00
SYNHH-08			3	2	18	13				REPRODUCE AMPLIFIER, CH 8	J18		1.820.710.00
			3	2	19	13				RECORD AMPLIFIER, CH 8	J19		1.820.811.00
SYNHH-09			4	1	3	13				REPRODUCE AMPLIFIER, CH 9	J03		1.820.710.00
			4	1	4	13				RECORD AMPLIFIER, CH 9	J04		1.820.811.00
SYNHH-10			4	1	8	13				REPRODUCE AMPLIFIER, CH10	J08		1.820.710.00
			4	1	9	13				RECORD AMPLIFIER, CH10	J09		1.820.811.00
SYNHH-11			4	1	13	13				REPRODUCE AMPLIFIER, CH11	J13		1.820.710.00
			4	1	14	13				RECORD AMPLIFIER, CH11	J14		1.820.811.00
SYNHH-12			4	1	18	13				REPRODUCE AMPLIFIER, CH12	J18		1.820.710.00
			4	1	19	13				RECORD AMPLIFIER, CH12	J19		1.820.811.00

* WILLI STUDER AG * S I G N A L W I R E L I S T * 89/07/20 * 9:25 * P A G E 191 *
* * TAPE TRANSPORT & AUDIO MCH * * 89/04/19 - 00 *

SIGNAL NAME	COLOR	MI	ASY	GRP	ELM	PNT	S	LV	TYPE	DESCRIPTION OF ELEMENT		REMARK	ELEMENT NR.
SYNHH-13			4	2	3	13				REPRODUCE AMPLIFIER, CH13	J03		1.820.710.00
			4	2	4	13				RECORD AMPLIFIER, CH13	J04		1.820.811.00
SYNHH-14			4	2	8	13				REPRODUCE AMPLIFIER, CH14	J08		1.820.710.00
			4	2	9	13				RECORD AMPLIFIER, CH14	J09		1.820.811.00
SYNHH-15			4	2	13	13				REPRODUCE AMPLIFIER, CH15	J13		1.820.710.00
			4	2	14	13				RECORD AMPLIFIER, CH15	J14		1.820.811.00
SYNHH-16			4	2	18	13				REPRODUCE AMPLIFIER, CH16	J18		1.820.710.00
			4	2	19	13				RECORD AMPLIFIER, CH16	J19		1.820.811.00
SYNHH-17			5	1	3	13				REPRODUCE AMPLIFIER, CH17	J03		1.820.710.00
			5	1	4	13				RECORD AMPLIFIER, CH17	J04		1.820.811.00
SYNHH-18			5	1	8	13				REPRODUCE AMPLIFIER, CH18	J08		1.820.710.00
			5	1	9	13				RECORD AMPLIFIER, CH18	J09		1.820.811.00
SYNHH-19			5	1	13	13				REPRODUCE AMPLIFIER, CH19	J13		1.820.710.00
			5	1	14	13				RECORD AMPLIFIER, CH19	J14		1.820.811.00
SYNHH-20			5	1	18	13				REPRODUCE AMPLIFIER, CH20	J18		1.820.710.00
			5	1	19	13				RECORD AMPLIFIER, CH20	J19		1.820.811.00
SYNHH-21			5	2	3	13				REPRODUCE AMPLIFIER, CH21	J03		1.820.710.00
			5	2	4	13				RECORD AMPLIFIER, CH21	J04		1.820.811.00
SYNHH-22			5	2	8	13				REPRODUCE AMPLIFIER, CH22	J08		1.820.710.00
			5	2	9	13				RECORD AMPLIFIER, CH22	J09		1.820.811.00
SYNHH-23			5	2	13	13				REPRODUCE AMPLIFIER, CH23	J13		1.820.710.00
			5	2	14	13				RECORD AMPLIFIER, CH23	J14		1.820.811.00
SYNHH-24			5	2	18	13				REPRODUCE AMPLIFIER, CH24	J18		1.820.710.00
			5	2	19	13				RECORD AMPLIFIER, CH24	J19		1.820.811.00
SYNHL-01			3	1	3	12				REPRODUCE AMPLIFIER, CH 1	J03		1.820.710.00
			3	1	4	12				RECORD AMPLIFIER, CH 1	J04		1.820.811.00
SYNHL-02			3	1	8	12				REPRODUCE AMPLIFIER, CH 2	J08		1.820.710.00
			3	1	9	12				RECORD AMPLIFIER, CH 2	J09		1.820.811.00
SYNHL-03			3	1	13	12				REPRODUCE AMPLIFIER, CH 3	J13		1.820.710.00
			3	1	14	12				RECORD AMPLIFIER, CH 3	J14		1.820.811.00
SYNHL-04			3	1	18	12				REPRODUCE AMPLIFIER, CH 4	J18		1.820.710.00
			3	1	19	12				RECORD AMPLIFIER, CH 4	J19		1.820.811.00
SYNHL-05			3	2	3	12				REPRODUCE AMPLIFIER, CH 5	J03		1.820.710.00
			3	2	4	12				RECORD AMPLIFIER, CH 5	J04		1.820.811.00
SYNHL-06			3	2	8	12				REPRODUCE AMPLIFIER, CH 6	J08		1.820.710.00
			3	2	9	12				RECORD AMPLIFIER, CH 6	J09		1.820.811.00
SYNHL-07			3	2	13	12				REPRODUCE AMPLIFIER, CH 7	J13		1.820.710.00
			3	2	14	12				RECORD AMPLIFIER, CH 7	J14		1.820.811.00

* WILLI STUDER AG * S I G N A L W I R E L I S T * 89/07/20 * 9:25 * P A G E 192 *
* * TAPE TRANSPORT & AUDIO MCH * * 89/04/19 - 00 *

SIGNAL NAME	COLOR	MI	ASY	GRP	ELM	PNT	S	LV	TYPE	DESCRIPTION OF ELEMENT		REMARK	ELEMENT NR.
SYNHL-08			3	2	18	12				REPRODUCE AMPLIFIER, CH 8	J18		1.820.710.00
			3	2	19	12				RECORD AMPLIFIER, CH 8	J19		1.820.811.00
SYNHL-09			4	1	3	12				REPRODUCE AMPLIFIER, CH 9	J03		1.820.710.00
			4	1	4	12				RECORD AMPLIFIER, CH 9	J04		1.820.811.00
SYNHL-10			4	1	8	12				REPRODUCE AMPLIFIER, CH10	J08		1.820.710.00
			4	1	9	12				RECORD AMPLIFIER, CH10	J09		1.820.811.00
SYNHL-11			4	1	13	12				REPRODUCE AMPLIFIER, CH11	J13		1.820.710.00
			4	1	14	12				RECORD AMPLIFIER, CH11	J14		1.820.811.00
SYNHL-12			4	1	18	12				REPRODUCE AMPLIFIER, CH12	J18		1.820.710.00
			4	1	19	12				RECORD AMPLIFIER, CH12	J19		1.820.811.00
SYNHL-13			4	2	3	12				REPRODUCE AMPLIFIER, CH13	J03		1.820.710.00
			4	2	4	12				RECORD AMPLIFIER, CH13	J04		1.820.811.00
SYNHL-14			4	2	8	12				REPRODUCE AMPLIFIER, CH14	J08		1.820.710.00
			4	2	9	12				RECORD AMPLIFIER, CH14	J09		1.820.811.00
SYNHL-15			4	2	13	12				REPRODUCE AMPLIFIER, CH15	J13		1.820.710.00
			4	2	14	12				RECORD AMPLIFIER, CH15	J14		1.820.811.00
SYNHL-16			4	2	18	12				REPRODUCE AMPLIFIER, CH16	J18		1.820.710.00
			4	2	19	12				RECORD AMPLIFIER, CH16	J19		1.820.811.00
SYNHL-17			5	1	3	12				REPRODUCE AMPLIFIER, CH17	J03		1.820.710.00
			5	1	4	12				RECORD AMPLIFIER, CH17	J04		1.820.811.00
SYNHL-18			5	1	8	12				REPRODUCE AMPLIFIER, CH18	J08		1.820.710.00
			5	1	9	12				RECORD AMPLIFIER, CH18	J09		1.820.811.00
SYNHL-19			5	1	13	12				REPRODUCE AMPLIFIER, CH19	J13		1.820.710.00
			5	1	14	12				RECORD AMPLIFIER, CH19	J14		1.820.811.00
SYNHL-20			5	1	18	12				REPRODUCE AMPLIFIER, CH20	J18		1.820.710.00
			5	1	19	12				RECORD AMPLIFIER, CH20	J19		1.820.811.00
SYNHL-21			5	2	3	12				REPRODUCE AMPLIFIER, CH21	J03		1.820.710.00
			5	2	4	12				RECORD AMPLIFIER, CH21	J04		1.820.811.00
SYNHL-22			5	2	8	12				REPRODUCE AMPLIFIER, CH22	J08		1.820.710.00
			5	2	9	12				RECORD AMPLIFIER, CH22	J09		1.820.811.00
SYNHL-23			5	2	13	12				REPRODUCE AMPLIFIER, CH23	J13		1.820.710.00
			5	2	14	12				RECORD AMPLIFIER, CH23	J14		1.820.811.00
SYNHL-24			5	2	18	12				REPRODUCE AMPLIFIER, CH24	J18		1.820.710.00
			5	2	19	12				RECORD AMPLIFIER, CH24	J19		1.820.811.00
SYPRE-01			3	1	3	3				REPRODUCE AMPLIFIER, CH 1	J03		1.820.710.00
SYPRE-02			3	1	8	3				REPRODUCE AMPLIFIER, CH 2	J08		1.820.710.00
SYPRE-03			3	1	13	3				REPRODUCE AMPLIFIER, CH 3	J13		1.820.710.00

```
*    WILLI STUDER AG    *    S I G N A L    W I R E    L I S T              * 89/07/20  *   9:25  *  P A G E 193   *
*                            * TAPE TRANSPORT & AUDIO MCH *                  * 89/04/19 - 00                        *
```

SIGNAL NAME	COLOR	MI	ASY	GRP	ELM	PNT	S	LV	TYPE	DESCRIPTION OF ELEMENT		REMARK	ELEMENT NR.
SYPRE-04			3	1	18	3				REPRODUCE AMPLIFIER, CH 4	J18		1.820.710.00
SYPRE-05			3	2	3	3				REPRODUCE AMPLIFIER, CH 5	J03		1.820.710.00
SYPRE-06			3	2	8	3				REPRODUCE AMPLIFIER, CH 6	J08		1.820.710.00
SYPRE-07			3	2	13	3				REPRODUCE AMPLIFIER, CH 7	J13		1.820.710.00
SYPRE-08			3	2	18	3				REPRODUCE AMPLIFIER, CH 8	J18		1.820.710.00
SYPRE-09			4	1	3	3				REPRODUCE AMPLIFIER, CH 9	J03		1.820.710.00
SYPRE-10			4	1	8	3				REPRODUCE AMPLIFIER, CH10	J08		1.820.710.00
SYPRE-11			4	1	13	3				REPRODUCE AMPLIFIER, CH11	J13		1.820.710.00
SYPRE-12			4	1	18	3				REPRODUCE AMPLIFIER, CH12	J18		1.820.710.00
SYPRE-13			4	2	3	3				REPRODUCE AMPLIFIER, CH13	J03		1.820.710.00
SYPRE-14			4	2	8	3				REPRODUCE AMPLIFIER, CH14	J08		1.820.710.00
SYPRE-15			4	2	13	3				REPRODUCE AMPLIFIER, CH15	J13		1.820.710.00
SYPRE-16			4	2	18	3				REPRODUCE AMPLIFIER, CH16	J18		1.820.710.00
SYPRE-17			5	1	3	3				REPRODUCE AMPLIFIER, CH17	J03		1.820.710.00
SYPRE-18			5	1	8	3				REPRODUCE AMPLIFIER, CH18	J08		1.820.710.00
SYPRE-19			5	1	13	3				REPRODUCE AMPLIFIER, CH19	J13		1.820.710.00
SYPRE-20			5	1	18	3				REPRODUCE AMPLIFIER, CH20	J18		1.820.710.00
SYPRE-21			5	2	3	3				REPRODUCE AMPLIFIER, CH21	J03		1.820.710.00
SYPRE-22			5	2	8	3				REPRODUCE AMPLIFIER, CH22	J08		1.820.710.00
SYPRE-23			5	2	13	3				REPRODUCE AMPLIFIER, CH23	J13		1.820.710.00
SYPRE-24			5	2	18	3				REPRODUCE AMPLIFIER, CH24	J18		1.820.710.00
SYS-CTS			1	20	30	3				SSDA INT. SYNCHRONIZER	P20		
			1	20	48	13B				MASTER SERIAL INTERFACE	J09		1.820.753.00
SYS-DTR			1	20	30	5				SSDA INT. SYNCHRONIZER	P20		
			1	20	48	13A				MASTER SERIAL INTERFACE	J09		1.820.753.00
SYS-RX			1	20	30	4				SSDA INT. SYNCHRONIZER	P20		
			1	20	48	12A				MASTER SERIAL INTERFACE	J09		1.820.753.00
SYS-TX			1	20	30	6				SSDA INT. SYNCHRONIZER	P20		
			1	20	48	12B				MASTER SERIAL INTERFACE	J09		1.820.753.00
T-A0			1	26	1	12				FROM PAR. REM. IF	P01		
			1	27	1	12				TO GRP26, ELM01 (SERIAL REM. IF)	P01		

```
*    WILLI STUDER AG    *    S I G N A L    W I R E    L I S T              * 89/07/20  *   9:25  *  P A G E 194   *
*                            * TAPE TRANSPORT & AUDIO MCH *                  * 89/04/19 - 00                        *
```

SIGNAL NAME	COLOR	MI	ASY	GRP	ELM	PNT	S	LV	TYPE	DESCRIPTION OF ELEMENT		REMARK	ELEMENT NR.
T-A0N-AB			1	21	24	1C				BUS DRIVER MCH	J09		1.820.723.00
			1	21	50	15				TO AUDIO RACK CH 1 TO 8	P10		
			1	22	24	1C				BUS DRIVER MCH	J09		1.820.723.00
			1	22	50	15				TO AUDIO RACK CH 1 TO 8	P10		
			3	1	21	2B				BUS CONVERTER	J21		1.820.717.00
			3	1	70	15					P01		
			3	2	21	2B				BUS CONVERTER	J21		1.820.717.00
			3	2	70	15					P01		
T-A0N-CD			1	21	24	9C				BUS DRIVER MCH	J09		1.820.723.00
			1	21	51	15				TO AUDIO RACK CH 9 TO 16	P11		
			1	22	24	9C				BUS DRIVER MCH	J09		1.820.723.00
			1	22	51	15				TO AUDIO RACK CH 9 TO 16	P11		
			4	1	21	2B				BUS CONVERTER	J21		1.820.717.00
			4	1	70	15					P01		
			4	2	21	2B				BUS CONVERTER	J21		1.820.717.00
			4	2	70	15					P01		
T-A0N-EF			1	21	24	17C				BUS DRIVER MCH	J09		1.820.723.00
			1	21	52	15				TO AUDIO RACK CH 17 TO 24	P12		
			1	22	24	17C				BUS DRIVER MCH	J09		1.820.723.00
			1	22	52	15				TO AUDIO RACK CH 17 TO 24	P12		
			5	1	21	2B				BUS CONVERTER	J21		1.820.717.00
			5	1	70	15					P01		
			5	2	21	2B				BUS CONVERTER	J21		1.820.717.00
			5	2	70	15					P01		
T-A0P-AB			1	21	24	1B				BUS DRIVER MCH	J09		1.820.723.00
			1	21	50	14				TO AUDIO RACK CH 1 TO 8	P10		
			1	22	24	1B				BUS DRIVER MCH	J09		1.820.723.00
			1	22	50	14				TO AUDIO RACK CH 1 TO 8	P10		
			3	1	21	2A				BUS CONVERTER	J21		1.820.717.00
			3	1	70	14					P01		
			3	2	21	2A				BUS CONVERTER	J21		1.820.717.00
			3	2	70	14					P01		
T-A0P-CD			1	21	24	9B				BUS DRIVER MCH	J09		1.820.723.00
			1	21	51	14				TO AUDIO RACK CH 9 TO 16	P11		
			1	22	24	9B				BUS DRIVER MCH	J09		1.820.723.00
			1	22	51	14				TO AUDIO RACK CH 9 TO 16	P11		
			4	1	21	2A				BUS CONVERTER	J21		1.820.717.00
			4	1	70	14					P01		
			4	2	21	2A				BUS CONVERTER	J21		1.820.717.00
			4	2	70	14					P01		
T-A0P-EF			1	21	24	17B				BUS DRIVER MCH	J09		1.820.723.00
			1	21	52	14				TO AUDIO RACK CH 17 TO 24	P12		
			1	22	24	17B				BUS DRIVER MCH	J09		1.820.723.00
			1	22	52	14				TO AUDIO RACK CH 17 TO 24	P12		
			5	1	21	2A				BUS CONVERTER	J21		1.820.717.00
			5	1	70	14					P01		
			5	2	21	2A				BUS CONVERTER	J21		1.820.717.00
			5	2	70	14					P01		
T-A1			1	26	1	9				FROM PAR. REM. IF	P01		
			1	27	1	9				TO GRP26, ELM01 (SERIAL REM. IF)	P01		

WILLI STUDER AG * S I G N A L W I R E L I S T * 89/07/20 * 9:25 * P A G E 195

* TAPE TRANSPORT & AUDIO MCH * * 89/04/19 - 00

SIGNAL NAME	COLOR	MI	ASY	GRP	ELM	PNT	S	LV	TYPE	DESCRIPTION OF ELEMENT		REMARK	ELEMENT NR.
T-A1N-AB			1	21	24	2C				BUS DRIVER MCH	J09		1.820.723.00
			1	21	50	18				TO AUDIO RACK CH 1 TO 8	P10		
			1	22	24	2C				BUS DRIVER MCH	J09		1.820.723.00
			1	22	50	18				TO AUDIO RACK CH 1 TO 8	P10		
			3	1	60	3				JUMPER SWITCH	JS01		
			3	1	70	18					P01		
			3	2	60	3				JUMPER SWITCH	JS01		
			3	2	70	18					P01		
T-A1N-CD			1	21	24	10C				BUS DRIVER MCH	J09		1.820.723.00
			1	21	51	18				TO AUDIO RACK CH 9 TO 16	P11		
			1	22	24	10C				BUS DRIVER MCH	J09		1.820.723.00
			1	22	51	18				TO AUDIO RACK CH 9 TO 16	P11		
			4	1	60	3				JUMPER SWITCH	JS01		
			4	1	70	18					P01		
			4	2	60	3				JUMPER SWITCH	JS01		
			4	2	70	18					P01		
T-A1N-EF			1	21	24	18C				BUS DRIVER MCH	J09		1.820.723.00
			1	21	52	18				TO AUDIO RACK CH 17 TO 24	P12		
			1	22	24	18C				BUS DRIVER MCH	J09		1.820.723.00
			1	22	52	18				TO AUDIO RACK CH 17 TO 24	P12		
			5	1	60	3				JUMPER SWITCH	JS01		
			5	1	70	18					P01		
			5	2	60	3				JUMPER SWITCH	JS01		
			5	2	70	18					P01		
T-A1P-AB			1	21	24	2B				BUS DRIVER MCH	J09		1.820.723.00
			1	21	50	17				TO AUDIO RACK CH 1 TO 8	P10		
			1	22	24	2B				BUS DRIVER MCH	J09		1.820.723.00
			1	22	50	17				TO AUDIO RACK CH 1 TO 8	P10		
			3	1	60	1				JUMPER SWITCH	JS01		
			3	1	60	5				JUMPER SWITCH	JS01		
			3	1	70	17					P01		
			3	2	60	1				JUMPER SWITCH	JS01		
			3	2	60	5				JUMPER SWITCH	JS01		
			3	2	70	17					P01		
T-A1P-CD			1	21	24	10B				BUS DRIVER MCH	J09		1.820.723.00
			1	21	51	17				TO AUDIO RACK CH 9 TO 16	P11		
			1	22	24	10B				BUS DRIVER MCH	J09		1.820.723.00
			1	22	51	17				TO AUDIO RACK CH 9 TO 16	P11		
			4	1	60	1				JUMPER SWITCH	JS01		
			4	1	60	5				JUMPER SWITCH	JS01		
			4	1	70	17					P01		
			4	2	60	1				JUMPER SWITCH	JS01		
			4	2	60	5				JUMPER SWITCH	JS01		
			4	2	70	17					P01		
T-A1P-EF			1	21	24	18B				BUS DRIVER MCH	J09		1.820.723.00
			1	21	52	17				TO AUDIO RACK CH 17 TO 24	P12		
			1	22	24	18B				BUS DRIVER MCH	J09		1.820.723.00
			1	22	52	17				TO AUDIO RACK CH 17 TO 24	P12		
			5	1	60	1				JUMPER SWITCH	JS01		
			5	1	60	5				JUMPER SWITCH	JS01		

WILLI STUDER AG * S I G N A L W I R E L I S T * 89/07/20 * 9:25 * P A G E 196

* TAPE TRANSPORT & AUDIO MCH * * 89/04/19 - 00

SIGNAL NAME	COLOR	MI	ASY	GRP	ELM	PNT	S	LV	TYPE	DESCRIPTION OF ELEMENT		REMARK	ELEMENT NR.
<<-- CONT.OF			5	1	70	17					P01		
T-A1P-EF			5	2	60	1				JUMPER SWITCH	JS01		
			5	2	60	5				JUMPER SWITCH	JS01		
			5	2	70	17					P01		
T-A2			1	26	1	10				FROM PAR. REM. IF	P01		
			1	27	1	10				TO GRP26, ELM01 (SERIAL REM. IF)	P01		
T-A3			1	26	1	7				FROM PAR. REM. IF	P01		
			1	27	1	7				TO GRP26, ELM01 (SERIAL REM. IF)	P01		
T-B0			1	26	1	8				FROM PAR. REM. IF	P01		
			1	27	1	8				TO GRP26, ELM01 (SERIAL REM. IF)	P01		
T-B0			1	26	1	15				FROM PAR. REM. IF	P01		
			1	27	1	15				TO GRP26, ELM01 (SERIAL REM. IF)	P01		
T-B1			1	26	1	13				FROM PAR. REM. IF	P01		
			1	27	1	13				TO GRP26, ELM01 (SERIAL REM. IF)	P01		
T-B2			1	26	1	14				FROM PAR. REM. IF	P01		
			1	27	1	14				TO GRP26, ELM01 (SERIAL REM. IF)	P01		
T-B3			1	26	1	11				FROM PAR. REM. IF	P01		
			1	27	1	11				TO GRP26, ELM01 (SERIAL REM. IF)	P01		
T-B6D0			6	1	5	9				CONNECTOR BARGRAPHS	P05		
			6	13	1	9				BARGRAPHS BOARD, CH 01 TO 08	P01		1.820.736.00
			6	14	1	9				BARGRAPHS BOARD, CH 09 TO 16	P01		1.820.736.00
			6	15	1	9				BARGRAPHS BOARD, CH 17 TO 24	P01		1.820.736.00
T-B6D1			6	1	5	10				CONNECTOR BARGRAPHS	P05		
			6	13	1	10				BARGRAPHS BOARD, CH 01 TO 08	P01		1.820.736.00
			6	14	1	10				BARGRAPHS BOARD, CH 09 TO 16	P01		1.820.736.00
			6	15	1	10				BARGRAPHS BOARD, CH 17 TO 24	P01		1.820.736.00
T-B6D2			6	1	5	11				CONNECTOR BARGRAPHS	P05		
			6	13	1	11				BARGRAPHS BOARD, CH 01 TO 08	P01		1.820.736.00
			6	14	1	11				BARGRAPHS BOARD, CH 09 TO 16	P01		1.820.736.00
			6	15	1	11				BARGRAPHS BOARD, CH 17 TO 24	P01		1.820.736.00
T-B6D3			6	1	5	12				CONNECTOR BARGRAPHS	P05		
			6	13	1	12				BARGRAPHS BOARD, CH 01 TO 08	P01		1.820.736.00
			6	14	1	12				BARGRAPHS BOARD, CH 09 TO 16	P01		1.820.736.00
			6	15	1	12				BARGRAPHS BOARD, CH 17 TO 24	P01		1.820.736.00
T-B6D4			6	1	5	13				CONNECTOR BARGRAPHS	P05		
			6	13	1	13				BARGRAPHS BOARD, CH 01 TO 08	P01		1.820.736.00
			6	14	1	13				BARGRAPHS BOARD, CH 09 TO 16	P01		1.820.736.00
			6	15	1	13				BARGRAPHS BOARD, CH 17 TO 24	P01		1.820.736.00
T-B6D5			6	1	5	14				CONNECTOR BARGRAPHS	P05		
			6	13	1	14				BARGRAPHS BOARD, CH 01 TO 08	P01		1.820.736.00
			6	14	1	14				BARGRAPHS BOARD, CH 09 TO 16	P01		1.820.736.00
			6	15	1	14				BARGRAPHS BOARD, CH 17 TO 24	P01		1.820.736.00

SIGNAL NAME	COLOR	MI	ASY	GRP	ELM	PNT	S	LV	TYPE	DESCRIPTION OF ELEMENT		REMARK	ELEMENT NR.
T-B6D6			6	1	5	15				CONNECTOR BARGRAPHS	P05		
			6	13	1	15				BARGRAPHS BOARD, CH 01 TO 08	P01		1.820.736.00
			6	14	1	15				BARGRAPHS BOARD, CH 09 TO 16	P01		1.820.736.00
			6	15	1	15				BARGRAPHS BOARD, CH 17 TO 24	P01		1.820.736.00
T-B6D7			6	1	5	16				CONNECTOR BARGRAPHS	P05		
			6	13	1	16				BARGRAPHS BOARD, CH 01 TO 08	P01		1.820.736.00
			6	14	1	16				BARGRAPHS BOARD, CH 09 TO 16	P01		1.820.736.00
			6	15	1	16				BARGRAPHS BOARD, CH 17 TO 24	P01		1.820.736.00
T-B6SL1			6	1	5	18				CONNECTOR BARGRAPHS	P05		
			6	13	1	18				BARGRAPHS BOARD, CH 01 TO 08	P01		1.820.736.00
			6	14	1	18				BARGRAPHS BOARD, CH 09 TO 16	P01		1.820.736.00
			6	15	1	18				BARGRAPHS BOARD, CH 17 TO 24	P01		1.820.736.00
T-B6SL2			6	1	5	19				CONNECTOR BARGRAPHS	P05		
			6	13	1	19				BARGRAPHS BOARD, CH 01 TO 08	P01		1.820.736.00
			6	14	1	19				BARGRAPHS BOARD, CH 09 TO 16	P01		1.820.736.00
			6	15	1	19				BARGRAPHS BOARD, CH 17 TO 24	P01		1.820.736.00
T-B6SL3			6	1	5	20				CONNECTOR BARGRAPHS	P05		
			6	13	1	20				BARGRAPHS BOARD, CH 01 TO 08	P01		1.820.736.00
			6	14	1	20				BARGRAPHS BOARD, CH 09 TO 16	P01		1.820.736.00
			6	15	1	20				BARGRAPHS BOARD, CH 17 TO 24	P01		1.820.736.00
T-B6WR			6	1	5	17				CONNECTOR BARGRAPHS	P05		
			6	13	1	17				BARGRAPHS BOARD, CH 01 TO 08	P01		1.820.736.00
			6	14	1	17				BARGRAPHS BOARD, CH 09 TO 16	P01		1.820.736.00
			6	15	1	17				BARGRAPHS BOARD, CH 17 TO 24	P01		1.820.736.00
T-CLN-AB			1	21	24	2A				BUS DRIVER MCH	J09		1.820.723.00
			1	21	50	12				TO AUDIO RACK CH 1 TO 8	P10		
			1	22	24	2A				BUS DRIVER MCH	J09		1.820.723.00
			1	22	50	12				TO AUDIO RACK CH 1 TO 8	P10		
T-CLN-CD			1	21	24	10A				BUS DRIVER MCH	J09		1.820.723.00
			1	21	51	12				TO AUDIO RACK CH 9 TO 16	P11		
			1	22	24	10A				BUS DRIVER MCH	J09		1.820.723.00
			1	22	51	12				TO AUDIO RACK CH 9 TO 16	P11		
T-CLN-EF			1	21	24	18A				BUS DRIVER MCH	J09		1.820.723.00
			1	21	52	12				TO AUDIO RACK CH 17 TO 24	P12		
			1	22	24	18A				BUS DRIVER MCH	J09		1.820.723.00
			1	22	52	12				TO AUDIO RACK CH 17 TO 24	P12		
T-CLP-AB			1	21	24	1A				BUS DRIVER MCH	J09		1.820.723.00
			1	21	50	11				TO AUDIO RACK CH 1 TO 8	P10		
			1	22	24	1A				BUS DRIVER MCH	J09		1.820.723.00
			1	22	50	11				TO AUDIO RACK CH 1 TO 8	P10		
T-CLP-CD			1	21	24	9A				BUS DRIVER MCH	J09		1.820.723.00
			1	21	51	11				TO AUDIO RACK CH 9 TO 16	P11		
			1	22	24	9A				BUS DRIVER MCH	J09		1.820.723.00
			1	22	51	11				TO AUDIO RACK CH 9 TO 16	P11		

SIGNAL NAME	COLOR	MI	ASY	GRP	ELM	PNT	S	LV	TYPE	DESCRIPTION OF ELEMENT		REMARK	ELEMENT NR.
T-CLP-EF			1	21	24	17A				BUS DRIVER MCH	J09		1.820.723.00
			1	21	52	11				TO AUDIO RACK CH 17 TO 24	P12		
			1	22	24	17A				BUS DRIVER MCH	J09		1.820.723.00
			1	22	52	11				TO AUDIO RACK CH 17 TO 24	P12		
T-DENB			6	1	3	4				CONNECTOR LCD DISPLAY	P03		
			6	52	1	4				TO GRP01, ELM03	J01		
T-DRESET			6	1	3	15				CONNECTOR LCD DISPLAY	P03		
			6	52	1	15				TO GRP01, ELM03	J01		
T-DT-CH1			1	20	18	12				RESERVE	P18		
			1	20	19	12				MECHANICAL ELAPSED TIMER	P19		
			1	20	51	3B				MASTER TO AUDIO INTERFACE	J12		1.820.756.00
			1	28	1	12				FROM B. BOARD TAPE DECK, ELM 19	P01		
			1	28	2	12				TO VU-METER PANEL	P02		
T-DT-CH2			1	20	18	13				RESERVE	P18		
			1	20	19	13				MECHANICAL ELAPSED TIMER	P19		
			1	20	51	4A				MASTER TO AUDIO INTERFACE	J12		1.820.756.00
			1	28	1	13				FROM B. BOARD TAPE DECK, ELM 19	P01		
			1	28	2	13				TO VU-METER PANEL	P02		
T-DT-CH3			1	20	18	14				RESERVE	P18		
			1	20	19	14				MECHANICAL ELAPSED TIMER	P19		
			1	20	51	4B				MASTER TO AUDIO INTERFACE	J12		1.820.756.00
			1	28	1	14				FROM B. BOARD TAPE DECK, ELM 19	P01		
			1	28	2	14				TO VU-METER PANEL	P02		
T-DT-MP			1	20	17	15				TO HEAD BLOCK ASSEMBLY	P17		
			1	20	18	15				RESERVE	P18		
			1	20	19	15				MECHANICAL ELAPSED TIMER	P19		
			1	20	51	5A				MASTER TO AUDIO INTERFACE	J12		1.820.756.00
			1	28	1	15				FROM B. BOARD TAPE DECK, ELM 19	P01		
			1	28	2	15				TO VU-METER PANEL	P02		
			2	1	10	8				HEAD BLOCK IDENTIFIER	P10		1.820.795.00
T-DT-RES			1	20	17	16				TO HEAD BLOCK ASSEMBLY	P17		
			1	20	18	16				RESERVE	P18		
			1	20	19	16				MECHANICAL ELAPSED TIMER	P19		
			1	20	51	8A				MASTER TO AUDIO INTERFACE	J12		1.820.756.00
			2	1	10	21				HEAD BLOCK IDENTIFIER	P10		1.820.795.00
T-DT-RP1			1	20	17	12				TO HEAD BLOCK ASSEMBLY	P17		
			1	20	51	5B				MASTER TO AUDIO INTERFACE	J12		1.820.756.00
			2	1	10	19				HEAD BLOCK IDENTIFIER	P10		1.820.795.00
T-DT-RP2			1	20	17	13				TO HEAD BLOCK ASSEMBLY	P17		
			1	20	51	6A				MASTER TO AUDIO INTERFACE	J12		1.820.756.00
			2	1	10	7				HEAD BLOCK IDENTIFIER	P10		1.820.795.00
T-DT-SJM			1	20	17	14				TO HEAD BLOCK ASSEMBLY	P17		
			1	20	51	7A				MASTER TO AUDIO INTERFACE	J12		1.820.756.00
			2	1	10	20				HEAD BLOCK IDENTIFIER	P10		1.820.795.00

SIGNAL NAME	COLOR	MI	ASY	GRP	ELM	PNT	S	LV	TYPE	DESCRIPTION OF ELEMENT		REMARK	ELEMENT NR.
T-DT0-AB			1	21	24	5B				BUS DRIVER MCH	J09		1.820.723.00
			1	21	50	25				TO AUDIO RACK CH 1 TO 8	P10		
			1	22	24	5B				BUS DRIVER MCH	J09		1.820.723.00
			1	22	50	25				TO AUDIO RACK CH 1 TO 8	P10		
			3	1	21	6A				BUS CONVERTER	J21		1.820.717.00
			3	1	70	25					P01		
			3	2	21	6A				BUS CONVERTER	J21		1.820.717.00
			3	2	70	25					P01		
T-DT0-CD			1	21	24	13B				BUS DRIVER MCH	J09		1.820.723.00
			1	21	51	25				TO AUDIO RACK CH 9 TO 16	P11		
			1	22	24	13B				BUS DRIVER MCH	J09		1.820.723.00
			1	22	51	25				TO AUDIO RACK CH 9 TO 16	P11		
			4	1	21	6A				BUS CONVERTER	J21		1.820.717.00
			4	1	70	25					P01		
			4	2	21	6A				BUS CONVERTER	J21		1.820.717.00
			4	2	70	25					P01		
T-DT0-EF			1	21	24	21B				BUS DRIVER MCH	J09		1.820.723.00
			1	21	52	25				TO AUDIO RACK CH 17 TO 24	P12		
			1	22	24	21B				BUS DRIVER MCH	J09		1.820.723.00
			1	22	52	25				TO AUDIO RACK CH 17 TO 24	P12		
			5	1	21	6A				BUS CONVERTER	J21		1.820.717.00
			5	1	70	25					P01		
			5	2	21	6A				BUS CONVERTER	J21		1.820.717.00
			5	2	70	25					P01		
T-DT1-AB			1	21	24	5C				BUS DRIVER MCH	J09		1.820.723.00
			1	21	50	27				TO AUDIO RACK CH 1 TO 8	P10		
			1	22	24	5C				BUS DRIVER MCH	J09		1.820.723.00
			1	22	50	27				TO AUDIO RACK CH 1 TO 8	P10		
			3	1	21	6B				BUS CONVERTER	J21		1.820.717.00
			3	1	70	27					P01		
			3	2	21	6B				BUS CONVERTER	J21		1.820.717.00
			3	2	70	27					P01		
T-DT1-CD			1	21	24	13C				BUS DRIVER MCH	J09		1.820.723.00
			1	21	51	27				TO AUDIO RACK CH 9 TO 16	P11		
			1	22	24	13C				BUS DRIVER MCH	J09		1.820.723.00
			1	22	51	27				TO AUDIO RACK CH 9 TO 16	P11		
			4	1	21	6B				BUS CONVERTER	J21		1.820.717.00
			4	1	70	27					P01		
			4	2	21	6B				BUS CONVERTER	J21		1.820.717.00
			4	2	70	27					P01		
T-DT1-EF			1	21	24	21C				BUS DRIVER MCH	J09		1.820.723.00
			1	21	52	27				TO AUDIO RACK CH 17 TO 24	P12		
			1	22	24	21C				BUS DRIVER MCH	J09		1.820.723.00
			1	22	52	27				TO AUDIO RACK CH 17 TO 24	P12		
			5	1	21	6B				BUS CONVERTER	J21		1.820.717.00
			5	1	70	27					P01		
			5	2	21	6B				BUS CONVERTER	J21		1.820.717.00
			5	2	70	27					P01		

SIGNAL NAME	COLOR	MI	ASY	GRP	ELM	PNT	S	LV	TYPE	DESCRIPTION OF ELEMENT		REMARK	ELEMENT NR.
T-DT2-AB			1	21	24	6B				BUS DRIVER MCH	J09		1.820.723.00
			1	21	50	29				TO AUDIO RACK CH 1 TO 8	P10		
			1	22	24	6B				BUS DRIVER MCH	J09		1.820.723.00
			1	22	50	29				TO AUDIO RACK CH 1 TO 8	P10		
			3	1	21	7A				BUS CONVERTER	J21		1.820.717.00
			3	1	70	29					P01		
			3	2	21	7A				BUS CONVERTER	J21		1.820.717.00
			3	2	70	29					P01		
T-DT2-CD			1	21	24	14B				BUS DRIVER MCH	J09		1.820.723.00
			1	21	51	29				TO AUDIO RACK CH 9 TO 16	P11		
			1	22	24	14B				BUS DRIVER MCH	J09		1.820.723.00
			1	22	51	29				TO AUDIO RACK CH 9 TO 16	P11		
			4	1	21	7A				BUS CONVERTER	J21		1.820.717.00
			4	1	70	29					P01		
			4	2	21	7A				BUS CONVERTER	J21		1.820.717.00
			4	2	70	29					P01		
T-DT2-EF			1	21	24	22B				BUS DRIVER MCH	J09		1.820.723.00
			1	21	52	29				TO AUDIO RACK CH 17 TO 24	P12		
			1	22	24	22B				BUS DRIVER MCH	J09		1.820.723.00
			1	22	52	29				TO AUDIO RACK CH 17 TO 24	P12		
			5	1	21	7A				BUS CONVERTER	J21		1.820.717.00
			5	1	70	29					P01		
			5	2	21	7A				BUS CONVERTER	J21		1.820.717.00
			5	2	70	29					P01		
T-DT3-AB			1	21	24	6C				BUS DRIVER MCH	J09		1.820.723.00
			1	21	50	31				TO AUDIO RACK CH 1 TO 8	P10		
			1	22	24	6C				BUS DRIVER MCH	J09		1.820.723.00
			1	22	50	31				TO AUDIO RACK CH 1 TO 8	P10		
			3	1	21	7B				BUS CONVERTER	J21		1.820.717.00
			3	1	70	31					P01		
			3	2	21	7B				BUS CONVERTER	J21		1.820.717.00
			3	2	70	31					P01		
T-DT3-CD			1	21	24	14C				BUS DRIVER MCH	J09		1.820.723.00
			1	21	51	31				TO AUDIO RACK CH 9 TO 16	P11		
			1	22	24	14C				BUS DRIVER MCH	J09		1.820.723.00
			1	22	51	31				TO AUDIO RACK CH 9 TO 16	P11		
			4	1	21	7B				BUS CONVERTER	J21		1.820.717.00
			4	1	70	31					P01		
			4	2	21	7B				BUS CONVERTER	J21		1.820.717.00
			4	2	70	31					P01		
T-DT3-EF			1	21	24	22C				BUS DRIVER MCH	J09		1.820.723.00
			1	21	52	31				TO AUDIO RACK CH 17 TO 24	P12		
			1	22	24	22C				BUS DRIVER MCH	J09		1.820.723.00
			1	22	52	31				TO AUDIO RACK CH 17 TO 24	P12		
			5	1	21	7B				BUS CONVERTER	J21		1.820.717.00
			5	1	70	31					P01		
			5	2	21	7B				BUS CONVERTER	J21		1.820.717.00
			5	2	70	31					P01		

```
*    WILLI STUDER AG    *    S I G N A L    W I R E    L I S T              * 89/07/20  *  9:25  *  P A G E 201   *
*                          * TAPE TRANSPORT & AUDIO MCH *                    * 89/04/19 - 00                        *
```

SIGNAL NAME	COLOR	MI	ASY	GRP	ELM	PNT	S	LV	TYPE	DESCRIPTION OF ELEMENT		REMARK	ELEMENT NR.
T-DT4-AB			1	21	24	7B				BUS DRIVER MCH	J09		1.820.723.00
			1	21	50	33				TO AUDIO RACK CH 1 TO 8	P10		
			1	22	24	7B				BUS DRIVER MCH	J09		1.820.723.00
			1	22	50	33				TO AUDIO RACK CH 1 TO 8	P10		
			3	1	21	8A				BUS CONVERTER	J21		1.820.717.00
			3	1	70	33					P01		
			3	2	21	8A				BUS CONVERTER	J21		1.820.717.00
			3	2	70	33					P01		
T-DT4-CD			1	21	24	15B				BUS DRIVER MCH	J09		1.820.723.00
			1	21	51	33				TO AUDIO RACK CH 9 TO 16	P11		
			1	22	24	15B				BUS DRIVER MCH	J09		1.820.723.00
			1	22	51	33				TO AUDIO RACK CH 9 TO 16	P11		
			4	1	21	8A				BUS CONVERTER	J21		1.820.717.00
			4	1	70	33					P01		
			4	2	21	8A				BUS CONVERTER	J21		1.820.717.00
			4	2	70	33					P01		
T-DT4-EF			1	21	24	23B				BUS DRIVER MCH	J09		1.820.723.00
			1	21	52	33				TO AUDIO RACK CH 17 TO 24	P12		
			1	22	24	23B				BUS DRIVER MCH	J09		1.820.723.00
			1	22	52	33				TO AUDIO RACK CH 17 TO 24	P12		
			5	1	21	8A				BUS CONVERTER	J21		1.820.717.00
			5	1	70	33					P01		
			5	2	21	8A				BUS CONVERTER	J21		1.820.717.00
			5	2	70	33					P01		
T-DT5-AB			1	21	24	7C				BUS DRIVER MCH	J09		1.820.723.00
			1	21	50	35				TO AUDIO RACK CH 1 TO 8	P10		
			1	22	24	7C				BUS DRIVER MCH	J09		1.820.723.00
			1	22	50	35				TO AUDIO RACK CH 1 TO 8	P10		
			3	1	21	8B				BUS CONVERTER	J21		1.820.717.00
			3	1	70	35					P01		
			3	2	21	8B				BUS CONVERTER	J21		1.820.717.00
			3	2	70	35					P01		
T-DT5-CD			1	21	24	15C				BUS DRIVER MCH	J09		1.820.723.00
			1	21	51	35				TO AUDIO RACK CH 9 TO 16	P11		
			1	22	24	15C				BUS DRIVER MCH	J09		1.820.723.00
			1	22	51	35				TO AUDIO RACK CH 9 TO 16	P11		
			4	1	21	8B				BUS CONVERTER	J21		1.820.717.00
			4	1	70	35					P01		
			4	2	21	8B				BUS CONVERTER	J21		1.820.717.00
			4	2	70	35					P01		
T-DT5-EF			1	21	24	23C				BUS DRIVER MCH	J09		1.820.723.00
			1	21	52	35				TO AUDIO RACK CH 17 TO 24	P12		
			1	22	24	23C				BUS DRIVER MCH	J09		1.820.723.00
			1	22	52	35				TO AUDIO RACK CH 17 TO 24	P12		
			5	1	21	8B				BUS CONVERTER	J21		1.820.717.00
			5	1	70	35					P01		
			5	2	21	8B				BUS CONVERTER	J21		1.820.717.00
			5	2	70	35					P01		

```
*    WILLI STUDER AG    *    S I G N A L    W I R E    L I S T              * 89/07/20  *  9:25  *  P A G E 202   *
*                          * TAPE TRANSPORT & AUDIO MCH *                    * 89/04/19 - 00                        *
```

SIGNAL NAME	COLOR	MI	ASY	GRP	ELM	PNT	S	LV	TYPE	DESCRIPTION OF ELEMENT		REMARK	ELEMENT NR.
T-DT6-AB			1	21	24	8B				BUS DRIVER MCH	J09		1.820.723.00
			1	21	50	37				TO AUDIO RACK CH 1 TO 8	P10		
			1	22	24	8B				BUS DRIVER MCH	J09		1.820.723.00
			1	22	50	37				TO AUDIO RACK CH 1 TO 8	P10		
			3	1	21	9A				BUS CONVERTER	J21		1.820.717.00
			3	1	70	37					P01		
			3	2	21	9A				BUS CONVERTER	J21		1.820.717.00
			3	2	70	37					P01		
T-DT6-CD			1	21	24	16B				BUS DRIVER MCH	J09		1.820.723.00
			1	21	51	37				TO AUDIO RACK CH 9 TO 16	P11		
			1	22	24	16B				BUS DRIVER MCH	J09		1.820.723.00
			1	22	51	37				TO AUDIO RACK CH 9 TO 16	P11		
			4	1	21	9A				BUS CONVERTER	J21		1.820.717.00
			4	1	70	37					P01		
			4	2	21	9A				BUS CONVERTER	J21		1.820.717.00
			4	2	70	37					P01		
T-DT6-EF			1	21	24	24B				BUS DRIVER MCH	J09		1.820.723.00
			1	21	52	37				TO AUDIO RACK CH 17 TO 24	P12		
			1	22	24	24B				BUS DRIVER MCH	J09		1.820.723.00
			1	22	52	37				TO AUDIO RACK CH 17 TO 24	P12		
			5	1	21	9A				BUS CONVERTER	J21		1.820.717.00
			5	1	70	37					P01		
			5	2	21	9A				BUS CONVERTER	J21		1.820.717.00
			5	2	70	37					P01		
T-DT7-AB			1	21	24	8C				BUS DRIVER MCH	J09		1.820.723.00
			1	21	50	39				TO AUDIO RACK CH 1 TO 8	P10		
			1	22	24	8C				BUS DRIVER MCH	J09		1.820.723.00
			1	22	50	39				TO AUDIO RACK CH 1 TO 8	P10		
			3	1	21	9B				BUS CONVERTER	J21		1.820.717.00
			3	1	70	39					P01		
			3	2	21	9B				BUS CONVERTER	J21		1.820.717.00
			3	2	70	39					P01		
T-DT7-CD			1	21	24	16C				BUS DRIVER MCH	J09		1.820.723.00
			1	21	51	39				TO AUDIO RACK CH 9 TO 16	P11		
			1	22	24	16C				BUS DRIVER MCH	J09		1.820.723.00
			1	22	51	39				TO AUDIO RACK CH 9 TO 16	P11		
			4	1	21	9B				BUS CONVERTER	J21		1.820.717.00
			4	1	70	39					P01		
			4	2	21	9B				BUS CONVERTER	J21		1.820.717.00
			4	2	70	39					P01		
T-DT7-EF			1	21	24	24C				BUS DRIVER MCH	J09		1.820.723.00
			1	21	52	39				TO AUDIO RACK CH 17 TO 24	P12		
			1	22	24	24C				BUS DRIVER MCH	J09		1.820.723.00
			1	22	52	39				TO AUDIO RACK CH 17 TO 24	P12		
			5	1	21	9B				BUS CONVERTER	J21		1.820.717.00
			5	1	70	39					P01		
			5	2	21	9B				BUS CONVERTER	J21		1.820.717.00
			5	2	70	39					P01		
T-IRES 2			1	20	43	19A				TAPE DECK PERIPHERY CONTR.	J04		1.820.762.00

* WILLI STUDER AG * S I G N A L W I R E L I S T * 89/07/20 * 9:25 * P A G E 203 *

* * TAPE TRANSPORT & AUDIO MCH * * 89/04/19 - 00 *

SIGNAL NAME	COLOR	MI	ASY	GRP	ELM	PNT	S	LV	TYPE	DESCRIPTION OF ELEMENT		REMARK	ELEMENT NR.
T-IRES 3			1	20	43	22A				TAPE DECK PERIPHERY CONTR.	J04		1.820.762.00
T-IRES 4			1	20	43	23A				TAPE DECK PERIPHERY CONTR.	J04		1.820.762.00
T-KBA0			6	1	4	5				KEYBOARD DRIVER, MASTER	P04		
			6	1	6	5				CH CONTROL KEYBOARD DRIVER	P06		
			6	5	1	5				BUS	P01		
			6	6	1	5				BUS	P01		
			6	7	1	5				BUS	P01		
			6	8	1	5				BUS	P01		
			6	16	1	5				BUS	P01		
T-KBA1			6	1	4	6				KEYBOARD DRIVER, MASTER	P04		
			6	1	6	6				CH CONTROL KEYBOARD DRIVER	P06		
			6	5	1	6				BUS	P01		
			6	6	1	6				BUS	P01		
			6	7	1	6				BUS	P01		
			6	8	1	6				BUS	P01		
			6	16	1	6				BUS	P01		
T-KBA2			6	1	4	7				KEYBOARD DRIVER, MASTER	P04		
			6	1	6	7				CH CONTROL KEYBOARD DRIVER	P06		
			6	5	1	7				BUS	P01		
			6	6	1	7				BUS	P01		
			6	7	1	7				BUS	P01		
			6	8	1	7				BUS	P01		
			6	16	1	7				BUS	P01		
T-KBD0			6	1	3	7				CONNECTOR LCD DISPLAY	P03		
			6	1	4	15				KEYBOARD DRIVER, MASTER	P04		
			6	1	6	15				CH CONTROL KEYBOARD DRIVER	P06		
			6	5	1	15				BUS	P01		
			6	6	1	15				BUS	P01		
			6	7	1	15				BUS	P01		
			6	8	1	15				BUS	P01		
			6	16	1	15				BUS	P01		
			6	52	1	7				TO GRP01, ELM03	J01		
T-KBD1			6	1	3	8				CONNECTOR LCD DISPLAY	P03		
			6	1	4	16				KEYBOARD DRIVER, MASTER	P04		
			6	1	6	16				CH CONTROL KEYBOARD DRIVER	P06		
			6	5	1	16				BUS	P01		
			6	6	1	16				BUS	P01		
			6	7	1	16				BUS	P01		
			6	8	1	16				BUS	P01		
			6	16	1	16				BUS	P01		
			6	52	1	8				TO GRP01, ELM03	J01		
T-KBD2			6	1	3	9				CONNECTOR LCD DISPLAY	P03		
			6	1	4	17				KEYBOARD DRIVER, MASTER	P04		
			6	1	6	17				CH CONTROL KEYBOARD DRIVER	P06		
			6	5	1	17				BUS	P01		
			6	6	1	17				BUS	P01		
			6	7	1	17				BUS	P01		
			6	8	1	17				BUS	P01		

* WILLI STUDER AG * S I G N A L W I R E L I S T * 89/07/20 * 9:25 * P A G E 204 *

* * TAPE TRANSPORT & AUDIO MCH * * 89/04/19 - 00 *

SIGNAL NAME	COLOR	MI	ASY	GRP	ELM	PNT	S	LV	TYPE	DESCRIPTION OF ELEMENT		REMARK	ELEMENT NR.
<<-- CONT.OF			6	16	1	17				BUS	P01		
T-KBD2			6	52	1	9				TO GRP01, ELM03	J01		
T-KBD3			6	1	3	10				CONNECTOR LCD DISPLAY	P03		
			6	1	4	18				KEYBOARD DRIVER, MASTER	P04		
			6	1	6	18				CH CONTROL KEYBOARD DRIVER	P06		
			6	5	1	18				BUS	P01		
			6	6	1	18				BUS	P01		
			6	7	1	18				BUS	P01		
			6	8	1	18				BUS	P01		
			6	16	1	18				BUS	P01		
			6	52	1	10				TO GRP01, ELM03	J01		
T-KBD4			6	1	3	11				CONNECTOR LCD DISPLAY	P03		
			6	1	4	19				KEYBOARD DRIVER, MASTER	P04		
			6	1	6	19				CH CONTROL KEYBOARD DRIVER	P06		
			6	5	1	19				BUS	P01		
			6	6	1	19				BUS	P01		
			6	7	1	19				BUS	P01		
			6	8	1	19				BUS	P01		
			6	16	1	19				BUS	P01		
			6	52	1	11				TO GRP01, ELM03	J01		
T-KBD5			6	1	3	12				CONNECTOR LCD DISPLAY	P03		
			6	1	4	20				KEYBOARD DRIVER, MASTER	P04		
			6	1	6	20				CH CONTROL KEYBOARD DRIVER	P06		
			6	5	1	20				BUS	P01		
			6	6	1	20				BUS	P01		
			6	7	1	20				BUS	P01		
			6	8	1	20				BUS	P01		
			6	16	1	20				BUS	P01		
			6	52	1	12				TO GRP01, ELM03	J01		
T-KBD6			6	1	3	13				CONNECTOR LCD DISPLAY	P03		
			6	1	4	21				KEYBOARD DRIVER, MASTER	P04		
			6	1	6	21				CH CONTROL KEYBOARD DRIVER	P06		
			6	5	1	21				BUS	P01		
			6	6	1	21				BUS	P01		
			6	7	1	21				BUS	P01		
			6	8	1	21				BUS	P01		
			6	16	1	21				BUS	P01		
			6	52	1	13				TO GRP01, ELM03	J01		
T-KBD7			6	1	3	14				CONNECTOR LCD DISPLAY	P03		
			6	1	4	22				KEYBOARD DRIVER, MASTER	P04		
			6	1	6	22				CH CONTROL KEYBOARD DRIVER	P06		
			6	5	1	22				BUS	P01		
			6	6	1	22				BUS	P01		
			6	7	1	22				BUS	P01		
			6	8	1	22				BUS	P01		
			6	16	1	22				BUS	P01		
			6	52	1	14				TO GRP01, ELM03	J01		

```
*    WILLI STUDER AG    *    S I G N A L    W I R E    L I S T              * 89/07/20 *  9:25 *  P A G E 205   *
*                          * TAPE TRANSPORT & AUDIO MCH *                                * 89/04/19 - 00                *
```

SIGNAL NAME	COLOR	MI	ASY	GRP	ELM	PNT	S	LV	TYPE	DESCRIPTION OF ELEMENT		REMARK	ELEMENT NR.
T-KBSL1			6	1	6	12				CH CONTROL KEYBOARD DRIVER	P06		
			6	5	1	12				BUS	P01		
			6	6	1	12				BUS	P01		
			6	7	1	12				BUS	P01		
T-KBSL2			6	1	6	13				CH CONTROL KEYBOARD DRIVER	P06		
			6	5	1	13				BUS	P01		
			6	6	1	13				BUS	P01		
			6	7	1	13				BUS	P01		
T-KBSL3			6	1	6	14				CH CONTROL KEYBOARD DRIVER	P06		
			6	5	1	14				BUS	P01		
			6	6	1	14				BUS	P01		
			6	7	1	14				BUS	P01		
T-KBSL4			6	1	4	12				KEYBOARD DRIVER, MASTER	P04		
			6	8	1	12				BUS	P01		
			6	16	1	12				BUS	P01		
T-KBSL5			6	1	4	13				KEYBOARD DRIVER, MASTER	P04		
			6	8	1	13				BUS	P01		
			6	16	1	13				BUS	P01		
T-KBWR			6	1	3	5				CONNECTOR LCD DISPLAY	P03		
			6	1	4	11				KEYBOARD DRIVER, MASTER	P04		
			6	1	6	11				CH CONTROL KEYBOARD DRIVER	P06		
			6	5	1	11				BUS	P01		
			6	6	1	11				BUS	P01		
			6	7	1	11				BUS	P01		
			6	8	1	11				BUS	P01		
			6	16	1	11				BUS	P01		
			6	52	1	5				TO GRP01, ELM03	J01		
T-MOD1			6	1	6	8				CH CONTROL KEYBOARD DRIVER	P06		
			6	5	1	8				BUS	P01		
			6	6	1	8				BUS	P01		
			6	7	1	8				BUS	P01		
T-MOD2			6	1	6	9				CH CONTROL KEYBOARD DRIVER	P06		
			6	5	1	9				BUS	P01		
			6	6	1	9				BUS	P01		
			6	7	1	9				BUS	P01		
T-MOD3			6	1	6	10				CH CONTROL KEYBOARD DRIVER	P06		
			6	5	1	10				BUS	P01		
			6	6	1	10				BUS	P01		
			6	7	1	10				BUS	P01		
T-MOD4			6	1	4	8				KEYBOARD DRIVER, MASTER	P04		
			6	8	1	8				BUS	P01		
			6	16	1	8				BUS	P01		
T-MOD5			6	1	4	9				KEYBOARD DRIVER, MASTER	P04		
			6	8	1	9				BUS	P01		
			6	16	1	9				BUS	P01		

```
*    WILLI STUDER AG    *    S I G N A L    W I R E    L I S T              * 89/07/20 *  9:25 *  P A G E 206   *
*                          * TAPE TRANSPORT & AUDIO MCH *                                * 89/04/19 - 00                *
```

SIGNAL NAME	COLOR	MI	ASY	GRP	ELM	PNT	S	LV	TYPE	DESCRIPTION OF ELEMENT		REMARK	ELEMENT NR.
T-MOD6			6	1	3	3				CONNECTOR LCD DISPLAY	P03		
			6	52	1	3				TO GRP01, ELM03	J01		
T-MOD7			6	1	3	6				CONNECTOR LCD DISPLAY	P03		
			6	52	1	6				TO GRP01, ELM03	J01		
T-OE			1	26	1	20				FROM PAR. REM. IF	P01		
			1	27	1	20				TO GRP26, ELM01 (SERIAL REM. IF)	P01		
T-PWRON			1	20	46	14				MP-UNIT TO CONTROL MCH	J07		1.820.781.00
			1	20	49	14				MP-UNIT MASTER MCH	J10		1.820.784.00
	5		1	20	62	14			U	WIRE FIELD			
	5		1	20	70	7			F	FROM GRP35, ELM59	J13		
			1	21	8	9			BX	FROM GRP35, ELM61	J01		
			1	21	21	14				MPU AUDIO CONTROL MCH	J06		1.820.782.00
			1	22	8	9			BX	FROM GRP35, ELM61	J01		
			1	22	21	14				MPU AUDIO CONTROL MCH	J06		1.820.782.00
	5		1	35	2	1			U	WIRE FIELD			
	5		1	35	2	2			U	WIRE FIELD			
	5		1	35	2	3			U	WIRE FIELD			
			1	35	2	4				WIRE FIELD			
			1	35	2	5				WIRE FIELD			
			1	35	2	6				WIRE FIELD			
	5		1	35	58	9			AX	FROM ASY07, GRP11, ELM01	P09		
	5		1	35	59	7			M	TO GRP20, ELM70	P10		
	5		1	35	61	9			AX	TO GRP21, ELM08	P12		
	5		7	11	1	9			BX		J02		54.25.0310
	5		7	14	1	5			BX				54.25.0308
T-READSL			1	20	17	10				TO HEAD BLOCK ASSEMBLY	P17		
			1	20	18	10				RESERVE	P18		
			1	20	19	10				MECHANICAL ELAPSED TIMER	P19		
			1	20	51	2B				MASTER TO AUDIO INTERFACE	J12		1.820.756.00
			1	28	1	10				FROM B. BOARD TAPE DECK, ELM 19	P01		
			1	28	2	10				TO VU-METER PANEL	P02		
			2	1	10	18				HEAD BLOCK IDENTIFIER	P10		1.820.795.00
T-REFEXT			1	20	16	15				PARALLEL REMOTE INTERFACE	P16		
			1	20	42	12B				CAPSTAN INTERFACE	J03		1.820.727.00
			1	20	51	10A				MASTER TO AUDIO INTERFACE	J12		1.820.756.00
			1	27	2	15				FROM GRP20, ELM16 (BASIS BOARD)	P02		
T-REFINT			1	20	4	12				PAR. CONT. INT. SYNCHRONIZER	P04		
			1	20	42	11B				CAPSTAN INTERFACE	J03		1.820.727.00
T-RESET			1	26	1	24				FROM PAR. REM. IF	P01		
			1	27	1	24				TO GRP26, ELM01 (SERIAL REM. IF)	P01		
T-RL0			1	26	1	4				FROM PAR. REM. IF	P01		
			1	27	1	4				TO GRP26, ELM01 (SERIAL REM. IF)	P01		
T-RL1			1	26	1	5				FROM PAR. REM. IF	P01		
			1	27	1	5				TO GRP26, ELM01 (SERIAL REM. IF)	P01		
T-RL2			1	26	1	26				FROM PAR. REM. IF	P01		
			1	27	1	26				TO GRP26, ELM01 (SERIAL REM. IF)	P01		

* WILLI STUDER AG * S I G N A L W I R E L I S T * 89/07/20 * 9:25 * P A G E 207 *
* * TAPE TRANSPORT & AUDIO MCH * * 89/04/19 - 00 *

SIGNAL NAME	COLOR	MI	ASY	GRP	ELM	PNT	S	LV	TYPE	DESCRIPTION OF ELEMENT		REMARK	ELEMENT NR.
T-RL3			1	26	1	25				FROM PAR. REM. IF	P01		
			1	27	1	25				TO GRP26, ELM01 (SERIAL REM. IF)	P01		
T-RL4			1	26	1	23				FROM PAR. REM. IF	P01		
			1	27	1	23				TO GRP26, ELM01 (SERIAL REM. IF)	P01		
T-RL5			1	26	1	22				FROM PAR. REM. IF	P01		
			1	27	1	22				TO GRP26, ELM01 (SERIAL REM. IF)	P01		
T-RL6			1	26	1	19				FROM PAR. REM. IF	P01		
			1	27	1	19				TO GRP26, ELM01 (SERIAL REM. IF)	P01		
T-RL7			1	26	1	18				FROM PAR. REM. IF	P01		
			1	27	1	18				TO GRP26, ELM01 (SERIAL REM. IF)	P01		
T-RWN-AB			1	21	24	3C				BUS DRIVER MCH	J09		1.820.723.00
			1	21	50	21				TO AUDIO RACK CH 1 TO 8	P10		
			1	22	24	3C				BUS DRIVER MCH	J09		1.820.723.00
			1	22	50	21				TO AUDIO RACK CH 1 TO 8	P10		
			3	1	21	4B				BUS CONVERTER	J21		1.820.717.00
			3	1	70	21					P01		
			3	2	21	4B				BUS CONVERTER	J21		1.820.717.00
			3	2	70	21					P01		
T-RWN-CD			1	21	24	11C				BUS DRIVER MCH	J09		1.820.723.00
			1	21	51	21				TO AUDIO RACK CH 9 TO 16	P11		
			1	22	24	11C				BUS DRIVER MCH	J09		1.820.723.00
			1	22	51	21				TO AUDIO RACK CH 9 TO 16	P11		
			4	1	21	4B				BUS CONVERTER	J21		1.820.717.00
			4	1	70	21					P01		
			4	2	21	4B				BUS CONVERTER	J21		1.820.717.00
			4	2	70	21					P01		
T-RWN-EF			1	21	24	19C				BUS DRIVER MCH	J09		1.820.723.00
			1	21	52	21				TO AUDIO RACK CH 17 TO 24	P12		
			1	22	24	19C				BUS DRIVER MCH	J09		1.820.723.00
			1	22	52	21				TO AUDIO RACK CH 17 TO 24	P12		
			5	1	21	4B				BUS CONVERTER	J21		1.820.717.00
			5	1	70	21					P01		
			5	2	21	4B				BUS CONVERTER	J21		1.820.717.00
			5	2	70	21					P01		
T-RWP-AB			1	21	24	3B				BUS DRIVER MCH	J09		1.820.723.00
			1	21	50	20				TO AUDIO RACK CH 1 TO 8	P10		
			1	22	24	3B				BUS DRIVER MCH	J09		1.820.723.00
			1	22	50	20				TO AUDIO RACK CH 1 TO 8	P10		
			3	1	21	4A				BUS CONVERTER	J21		1.820.717.00
			3	1	70	20					P01		
			3	2	21	4A				BUS CONVERTER	J21		1.820.717.00
			3	2	70	20					P01		
T-RWP-CD			1	21	24	11B				BUS DRIVER MCH	J09		1.820.723.00
			1	21	51	20				TO AUDIO RACK CH 9 TO 16	P11		
			1	22	24	11B				BUS DRIVER MCH	J09		1.820.723.00
			1	22	51	20				TO AUDIO RACK CH 9 TO 16	P11		

* WILLI STUDER AG * S I G N A L W I R E L I S T * 89/07/20 * 9:25 * P A G E 208 *
* * TAPE TRANSPORT & AUDIO MCH * * 89/04/19 - 00 *

SIGNAL NAME	COLOR	MI	ASY	GRP	ELM	PNT	S	LV	TYPE	DESCRIPTION OF ELEMENT		REMARK	ELEMENT NR.
<<-- CONT.OF			4	1	21	4A				BUS CONVERTER	J21		1.820.717.00
T-RWP-CD			4	1	70	20					P01		
			4	2	21	4A				BUS CONVERTER	J21		1.820.717.00
			4	2	70	20					P01		
T-RWP-EF			1	21	24	19B				BUS DRIVER MCH	J09		1.820.723.00
			1	21	52	20				TO AUDIO RACK CH 17 TO 24	P12		
			1	22	24	19B				BUS DRIVER MCH	J09		1.820.723.00
			1	22	52	20				TO AUDIO RACK CH 17 TO 24	P12		
			5	1	21	4A				BUS CONVERTER	J21		1.820.717.00
			5	1	70	20					P01		
			5	2	21	4A				BUS CONVERTER	J21		1.820.717.00
			5	2	70	20					P01		
T-SADA			1	20	17	7				TO HEAD BLOCK ASSEMBLY	P17		
			1	20	18	7				RESERVE	P18		
			1	20	19	7				MECHANICAL ELAPSED TIMER	P19		
			1	20	51	1A				MASTER TO AUDIO INTERFACE	J12		1.820.756.00
			1	28	1	7				FROM B. BOARD TAPE DECK, ELM 19	P01		
			1	28	2	7				TO VU-METER PANEL	P02		
			2	1	10	4				HEAD BLOCK IDENTIFIER	P10		1.820.795.00
T-SADB			1	20	17	8				TO HEAD BLOCK ASSEMBLY	P17		
			1	20	18	8				RESERVE	P18		
			1	20	19	8				MECHANICAL ELAPSED TIMER	P19		
			1	20	51	1B				MASTER TO AUDIO INTERFACE	J12		1.820.756.00
			1	28	1	8				FROM B. BOARD TAPE DECK, ELM 19	P01		
			1	28	2	8				TO VU-METER PANEL	P02		
			2	1	10	17				HEAD BLOCK IDENTIFIER	P10		1.820.795.00
T-SADC			1	20	17	9				TO HEAD BLOCK ASSEMBLY	P17		
			1	20	18	9				RESERVE	P18		
			1	20	19	9				MECHANICAL ELAPSED TIMER	P19		
			1	20	51	2A				MASTER TO AUDIO INTERFACE	J12		1.820.756.00
			1	28	1	9				FROM B. BOARD TAPE DECK, ELM 19	P01		
			1	28	2	9				TO VU-METER PANEL	P02		
			2	1	10	5				HEAD BLOCK IDENTIFIER	P10		1.820.795.00
T-SL-AB			1	21	24	4B				BUS DRIVER MCH	J09		1.820.723.00
			1	21	50	23				TO AUDIO RACK CH 1 TO 8	P10		
			1	22	24	4B				BUS DRIVER MCH	J09		1.820.723.00
			1	22	50	23				TO AUDIO RACK CH 1 TO 8	P10		
			3	1	21	5A				BUS CONVERTER	J21		1.820.717.00
			3	1	70	23					P01		
			3	2	21	5A				BUS CONVERTER	J21		1.820.717.00
			3	2	70	23					P01		
T-SL-CD			1	21	24	12B				BUS DRIVER MCH	J09		1.820.723.00
			1	21	51	23				TO AUDIO RACK CH 9 TO 16	P11		
			1	22	24	12B				BUS DRIVER MCH	J09		1.820.723.00
			1	22	51	23				TO AUDIO RACK CH 9 TO 16	P11		
			4	1	21	5A				BUS CONVERTER	J21		1.820.717.00
			4	1	70	23					P01		
			4	2	21	5A				BUS CONVERTER	J21		1.820.717.00
			4	2	70	23					P01		

```
*****************************************************************************************************************************
*   WILLI STUDER AG   *   S I G N A L   W I R E   L I S T                 * 89/07/20 *  9:25 *  P A G E 209   *
*****************************************************************************************************************************
*                          * TAPE TRANSPORT & AUDIO MCH *                  * 89/04/19 - 00                                  *
*****************************************************************************************************************************

SIGNAL NAME  COLOR  MI  ASY GRP ELM PNT  S  LV  TYPE          DESCRIPTION OF ELEMENT                 REMARK      ELEMENT NR.
-----------  -----  --  ---------------  -  --  ------------  -------------------------------------  ----------  ----------------
T-SL-EF                  1  21  24  20B                      BUS DRIVER MCH                 J09                 1.820.723.00
                         1  21  52  23                       TO AUDIO RACK CH 17 TO 24      P12
                         1  22  24  20B                      BUS DRIVER MCH                 J09                 1.820.723.00
                         1  22  52  23                       TO AUDIO RACK CH 17 TO 24      P12
                         5   1  21   5A                      BUS CONVERTER                  J21                 1.820.717.00
                         5   1  70  23                                                      P01
                         5   2  21   5A                      BUS CONVERTER                  J21                 1.820.717.00
                         5   2  70  23                                                      P01
-----------  -----  --  ---------------  -  --  ------------  -------------------------------------  ----------  ----------------
T-SL0                    1  26   1  16                       FROM PAR. REM. IF              P01
                         1  27   1  16                       TO GRP26, ELM01 (SERIAL REM. IF) P01
-----------  -----  --  ---------------  -  --  ------------  -------------------------------------  ----------  ----------------
T-SL1                    1  26   1  17                       FROM PAR. REM. IF              P01
                         1  27   1  17                       TO GRP26, ELM01 (SERIAL REM. IF) P01
-----------  -----  --  ---------------  -  --  ------------  -------------------------------------  ----------  ----------------
T-SL2                    1  26   1  21                       FROM PAR. REM. IF              P01
                         1  27   1  21                       TO GRP26, ELM01 (SERIAL REM. IF) P01
-----------  -----  --  ---------------  -  --  ------------  -------------------------------------  ----------  ----------------
T-SL3                    1  26   1   6                       FROM PAR. REM. IF              P01
                         1  27   1   6                       TO GRP26, ELM01 (SERIAL REM. IF) P01
-----------  -----  --  ---------------  -  --  ------------  -------------------------------------  ----------  ----------------
T-SPDSL1                 1  39   1  11                       FROM GRP20, ELM03 (BASIS B. TD)  P01
-----------  -----  --  ---------------  -  --  ------------  -------------------------------------  ----------  ----------------
T-SPDSL2                 1  39   1  12                       FROM GRP20, ELM03 (BASIS B. TD)  P01
-----------  -----  --  ---------------  -  --  ------------  -------------------------------------  ----------  ----------------
T-SUPVON                 1  20  14   6                       FUSE FAILURE DETECTOR          P14
                         1  20  43  10B                      TAPE DECK PERIPHERY CONTR.     J04                 1.820.762.00
                         1  59   1   6                       FROM GRP20, ELM14 (BASIS B. TD)  P01
-----------  -----  --  ---------------  -  --  ------------  -------------------------------------  ----------  ----------------
T-VARSPD                 1  20  18  21                       RESERVE                        P18
-----------  -----  --  ---------------  -  --  ------------  -------------------------------------  ----------  ----------------
T-WRTSL                  1  20  17  11                       TO HEAD BLOCK ASSEMBLY         P17
                         1  20  18  11                       RESERVE                        P18
                         1  20  19  11                       MECHANICAL ELAPSED TIMER       P19
                         1  20  51   3A                      MASTER TO AUDIO INTERFACE      J12                 1.820.756.00
                         1  28   1  11                       FROM B. BOARD TAPE DECK, ELM 19  P01
                         1  28   2  11                       TO VU-METER PANEL              P02
                         2   1  10   6                       HEAD BLOCK IDENTIFIER          P10                 1.820.795.00
-----------  -----  --  ---------------  -  --  ------------  -------------------------------------  ----------  ----------------
TA-ACT01                 3   1   1  20                       LINE AMPLIFIER, CH 1           J01                 1.820.715.00
                         3   1   3  20                       REPRODUCE AMPLIFIER, CH 1      J03                 1.820.710.00
                         3   1   4  20                       RECORD AMPLIFIER, CH 1         J04                 1.820.811.00
                         3   1   5  20                       HF-DRIVER, CH 1                J05                 1.820.813.00
                         3   1  21  12A                      BUS CONVERTER                  J21                 1.820.717.00
-----------  -----  --  ---------------  -  --  ------------  -------------------------------------  ----------  ----------------
TA-ACT02                 3   1   6  20                       LINE AMPLIFIER, CH 2           J06                 1.820.715.00
                         3   1   8  20                       REPRODUCE AMPLIFIER, CH 2      J08                 1.820.710.00
                         3   1   9  20                       RECORD AMPLIFIER, CH 2         J09                 1.820.811.00
                         3   1  10  20                       HF-DRIVER, CH 2                J10                 1.820.813.00
                         3   1  21  12B                      BUS CONVERTER                  J21                 1.820.717.00
-----------  -----  --  ---------------  -  --  ------------  -------------------------------------  ----------  ----------------
TA-ACT03                 3   1  11  20                       LINE AMPLIFIER, CH 3           J11                 1.820.715.00
                         3   1  13  20                       REPRODUCE AMPLIFIER, CH 3      J13                 1.820.710.00
                         3   1  14  20                       RECORD AMPLIFIER, CH 3         J14                 1.820.811.00
                         3   1  15  20                       HF-DRIVER, CH 3                J15                 1.820.813.00
                         3   1  21  13A                      BUS CONVERTER                  J21                 1.820.717.00

*****************************************************************************************************************************
*   WILLI STUDER AG   *   S I G N A L   W I R E   L I S T                 * 89/07/20 *  9:25 *  P A G E 210   *
*****************************************************************************************************************************
*                          * TAPE TRANSPORT & AUDIO MCH *                  * 89/04/19 - 00                                  *
*****************************************************************************************************************************

SIGNAL NAME  COLOR  MI  ASY GRP ELM PNT  S  LV  TYPE          DESCRIPTION OF ELEMENT                 REMARK      ELEMENT NR.
-----------  -----  --  ---------------  -  --  ------------  -------------------------------------  ----------  ----------------
TA-ACT04                 3   1  16  20                       LINE AMPLIFIER, CH 4           J16                 1.820.715.00
                         3   1  18  20                       REPRODUCE AMPLIFIER, CH 4      J18                 1.820.710.00
                         3   1  19  20                       RECORD AMPLIFIER, CH 4         J19                 1.820.811.00
                         3   1  20  20                       HF-DRIVER, CH 4                J20                 1.820.813.00
                         3   1  21  13B                      BUS CONVERTER                  J21                 1.820.717.00
-----------  -----  --  ---------------  -  --  ------------  -------------------------------------  ----------  ----------------
TA-ACT05                 3   2   1  20                       LINE AMPLIFIER, CH 5           J01                 1.820.715.00
                         3   2   3  20                       REPRODUCE AMPLIFIER, CH 5      J03                 1.820.710.00
                         3   2   4  20                       RECORD AMPLIFIER, CH 5         J04                 1.820.811.00
                         3   2   5  20                       HF-DRIVER, CH 5                J05                 1.820.813.00
                         3   2  21  12A                      BUS CONVERTER                  J21                 1.820.717.00
-----------  -----  --  ---------------  -  --  ------------  -------------------------------------  ----------  ----------------
TA-ACT06                 3   2   6  20                       LINE AMPLIFIER, CH 6           J06                 1.820.715.00
                         3   2   8  20                       REPRODUCE AMPLIFIER, CH 6      J08                 1.820.710.00
                         3   2   9  20                       RECORD AMPLIFIER, CH 6         J09                 1.820.811.00
                         3   2  10  20                       HF-DRIVER, CH 6                J10                 1.820.813.00
                         3   2  21  12B                      BUS CONVERTER                  J21                 1.820.717.00
-----------  -----  --  ---------------  -  --  ------------  -------------------------------------  ----------  ----------------
TA-ACT07                 3   2  11  20                       LINE AMPLIFIER, CH 7           J11                 1.820.715.00
                         3   2  13  20                       REPRODUCE AMPLIFIER, CH 7      J13                 1.820.710.00
                         3   2  14  20                       RECORD AMPLIFIER, CH 7         J14                 1.820.811.00
                         3   2  15  20                       HF-DRIVER, CH 7                J15                 1.820.813.00
                         3   2  21  13A                      BUS CONVERTER                  J21                 1.820.717.00
-----------  -----  --  ---------------  -  --  ------------  -------------------------------------  ----------  ----------------
TA-ACT08                 3   2  16  20                       LINE AMPLIFIER, CH 8           J16                 1.820.715.00
                         3   2  18  20                       REPRODUCE AMPLIFIER, CH 8      J18                 1.820.710.00
                         3   2  19  20                       RECORD AMPLIFIER, CH 8         J19                 1.820.811.00
                         3   2  20  20                       HF-DRIVER, CH 8                J20                 1.820.813.00
                         3   2  21  13B                      BUS CONVERTER                  J21                 1.820.717.00
-----------  -----  --  ---------------  -  --  ------------  -------------------------------------  ----------  ----------------
TA-ACT09                 4   1   1  20                       LINE AMPLIFIER, CH 9           J01                 1.820.715.00
                         4   1   3  20                       REPRODUCE AMPLIFIER, CH 9      J03                 1.820.710.00
                         4   1   4  20                       RECORD AMPLIFIER, CH 9         J04                 1.820.811.00
                         4   1   5  20                       HF-DRIVER, CH 9                J05                 1.820.813.00
                         4   1  21  12A                      BUS CONVERTER                  J21                 1.820.717.00
-----------  -----  --  ---------------  -  --  ------------  -------------------------------------  ----------  ----------------
TA-ACT10                 4   1   6  20                       LINE AMPLIFIER, CH10           J06                 1.820.715.00
                         4   1   8  20                       REPRODUCE AMPLIFIER, CH10      J08                 1.820.710.00
                         4   1   9  20                       RECORD AMPLIFIER, CH10         J09                 1.820.811.00
                         4   1  10  20                       HF-DRIVER, CH10                J10                 1.820.813.00
                         4   1  21  12B                      BUS CONVERTER                  J21                 1.820.717.00
-----------  -----  --  ---------------  -  --  ------------  -------------------------------------  ----------  ----------------
TA-ACT11                 4   1  11  20                       LINE AMPLIFIER, CH11           J11                 1.820.715.00
                         4   1  13  20                       REPRODUCE AMPLIFIER, CH11      J13                 1.820.710.00
                         4   1  14  20                       RECORD AMPLIFIER, CH11         J14                 1.820.811.00
                         4   1  15  20                       HF-DRIVER, CH11                J15                 1.820.813.00
                         4   1  21  13A                      BUS CONVERTER                  J21                 1.820.717.00
-----------  -----  --  ---------------  -  --  ------------  -------------------------------------  ----------  ----------------
TA-ACT12                 4   1  16  20                       LINE AMPLIFIER, CH12           J16                 1.820.715.00
                         4   1  18  20                       REPRODUCE AMPLIFIER, CH12      J18                 1.820.710.00
                         4   1  19  20                       RECORD AMPLIFIER, CH12         J19                 1.820.811.00
                         4   1  20  20                       HF-DRIVER, CH12                J20                 1.820.813.00
                         4   1  21  13B                      BUS CONVERTER                  J21                 1.820.717.00
```

* WILLI STUDER AG * S I G N A L W I R E L I S T * 89/07/20 * 9:25 * P A G E 211 *
* * TAPE TRANSPORT & AUDIO MCH * * 89/04/19 - 00 *

SIGNAL NAME	COLOR	MI	ASY	GRP	ELM	PNT	S	LV	TYPE	DESCRIPTION OF ELEMENT		REMARK	ELEMENT NR.
TA-ACT13			4	2	1	20				LINE AMPLIFIER, CH13	J01		1.820.715.00
			4	2	3	20				REPRODUCE AMPLIFIER, CH13	J03		1.820.710.00
			4	2	4	20				RECORD AMPLIFIER, CH13	J04		1.820.811.00
			4	2	5	20				HF-DRIVER, CH13	J05		1.820.813.00
			4	2	21	12A				BUS CONVERTER	J21		1.820.717.00
TA-ACT14			4	2	6	20				LINE AMPLIFIER, CH14	J06		1.820.715.00
			4	2	8	20				REPRODUCE AMPLIFIER, CH14	J08		1.820.710.00
			4	2	9	20				RECORD AMPLIFIER, CH14	J09		1.820.811.00
			4	2	10	20				HF-DRIVER, CH14	J10		1.820.813.00
			4	2	21	12B				BUS CONVERTER	J21		1.820.717.00
TA-ACT15			4	2	11	20				LINE AMPLIFIER, CH15	J11		1.820.715.00
			4	2	13	20				REPRODUCE AMPLIFIER, CH15	J13		1.820.710.00
			4	2	14	20				RECORD AMPLIFIER, CH15	J14		1.820.811.00
			4	2	15	20				HF-DRIVER, CH15	J15		1.820.813.00
			4	2	21	13A				BUS CONVERTER	J21		1.820.717.00
TA-ACT16			4	2	16	20				LINE AMPLIFIER, CH16	J16		1.820.715.00
			4	2	18	20				REPRODUCE AMPLIFIER, CH16	J18		1.820.710.00
			4	2	19	20				RECORD AMPLIFIER, CH16	J19		1.820.811.00
			4	2	20	20				HF-DRIVER, CH16	J20		1.820.813.00
			4	2	21	13B				BUS CONVERTER	J21		1.820.717.00
TA-ACT17			5	1	1	20				LINE AMPLIFIER, CH17	J01		1.820.715.00
			5	1	3	20				REPRODUCE AMPLIFIER, CH17	J03		1.820.710.00
			5	1	4	20				RECORD AMPLIFIER, CH17	J04		1.820.811.00
			5	1	5	20				HF-DRIVER, CH17	J05		1.820.813.00
			5	1	21	12A				BUS CONVERTER	J21		1.820.717.00
TA-ACT18			5	1	6	20				LINE AMPLIFIER, CH18	J06		1.820.715.00
			5	1	8	20				REPRODUCE AMPLIFIER, CH18	J08		1.820.710.00
			5	1	9	20				RECORD AMPLIFIER, CH18	J09		1.820.811.00
			5	1	10	20				HF-DRIVER, CH18	J10		1.820.813.00
			5	1	21	12B				BUS CONVERTER	J21		1.820.717.00
TA-ACT19			5	1	11	20				LINE AMPLIFIER, CH19	J11		1.820.715.00
			5	1	13	20				REPRODUCE AMPLIFIER, CH19	J13		1.820.710.00
			5	1	14	20				RECORD AMPLIFIER, CH19	J14		1.820.811.00
			5	1	15	20				HF-DRIVER, CH19	J15		1.820.813.00
			5	1	21	13A				BUS CONVERTER	J21		1.820.717.00
TA-ACT20			5	1	16	20				LINE AMPLIFIER, CH20	J16		1.820.715.00
			5	1	18	20				REPRODUCE AMPLIFIER, CH20	J18		1.820.710.00
			5	1	19	20				RECORD AMPLIFIER, CH20	J19		1.820.811.00
			5	1	20	20				HF-DRIVER, CH20	J20		1.820.813.00
			5	1	21	13B				BUS CONVERTER	J21		1.820.717.00
TA-ACT21			5	2	1	20				LINE AMPLIFIER, CH21	J01		1.820.715.00
			5	2	3	20				REPRODUCE AMPLIFIER, CH21	J03		1.820.710.00
			5	2	4	20				RECORD AMPLIFIER, CH21	J04		1.820.811.00
			5	2	5	20				HF-DRIVER, CH21	J05		1.820.813.00
			5	2	21	12A				BUS CONVERTER	J21		1.820.717.00

* WILLI STUDER AG * S I G N A L W I R E L I S T * 89/07/20 * 9:25 * P A G E 212 *
* * TAPE TRANSPORT & AUDIO MCH * * 89/04/19 - 00 *

SIGNAL NAME	COLOR	MI	ASY	GRP	ELM	PNT	S	LV	TYPE	DESCRIPTION OF ELEMENT		REMARK	ELEMENT NR.
TA-ACT22			5	2	6	20				LINE AMPLIFIER, CH22	J06		1.820.715.00
			5	2	8	20				REPRODUCE AMPLIFIER, CH22	J08		1.820.710.00
			5	2	9	20				RECORD AMPLIFIER, CH22	J09		1.820.811.00
			5	2	10	20				HF-DRIVER, CH22	J10		1.820.813.00
			5	2	21	12B				BUS CONVERTER	J21		1.820.717.00
TA-ACT23			5	2	11	20				LINE AMPLIFIER, CH23	J11		1.820.715.00
			5	2	13	20				REPRODUCE AMPLIFIER, CH23	J13		1.820.710.00
			5	2	14	20				RECORD AMPLIFIER, CH23	J14		1.820.811.00
			5	2	15	20				HF-DRIVER, CH23	J15		1.820.813.00
			5	2	21	13A				BUS CONVERTER	J21		1.820.717.00
TA-ACT24			5	2	16	20				LINE AMPLIFIER, CH24	J16		1.820.715.00
			5	2	18	20				REPRODUCE AMPLIFIER, CH24	J18		1.820.710.00
			5	2	19	20				RECORD AMPLIFIER, CH24	J19		1.820.811.00
			5	2	20	20				HF-DRIVER, CH24	J20		1.820.813.00
			5	2	21	13B				BUS CONVERTER	J21		1.820.717.00
TA-ADR0			1	21	20	31				COMMUNICATIONS CONTROLLER	J05		1.820.718.00
			1	21	21	31				MPU AUDIO CONTROL MCH	J06		1.820.782.00
			1	21	22	31				GENERATOR UNIT MCH	J07		1.820.725.00
			1	21	23	28B				CONTROLLER EXTERNAL NRS	J08		1.820.816.00
			1	21	24	28C				BUS DRIVER MCH	J09		1.820.723.00
			1	22	20	31				COMMUNICATIONS CONTROLLER	J05		1.820.718.00
			1	22	21	31				MPU AUDIO CONTROL MCH	J06		1.820.782.00
			1	22	22	31				GENERATOR UNIT MCH	J07		1.820.725.00
			1	22	23	28B				CONTROLLER EXTERNAL NRS	J08		1.820.816.00
			1	22	24	28C				BUS DRIVER MCH	J09		1.820.723.00
			1	22	25	28B				FLOPPY DISK CONTROLLER	J10		1.820.726.00
TA-ADR1			1	21	20	30				COMMUNICATIONS CONTROLLER	J05		1.820.718.00
			1	21	21	30				MPU AUDIO CONTROL MCH	J06		1.820.782.00
			1	21	22	30				GENERATOR UNIT MCH	J07		1.820.725.00
			1	21	23	28A				CONTROLLER EXTERNAL NRS	J08		1.820.816.00
			1	21	24	28B				BUS DRIVER MCH	J09		1.820.723.00
			1	22	20	30				COMMUNICATIONS CONTROLLER	J05		1.820.718.00
			1	22	21	30				MPU AUDIO CONTROL MCH	J06		1.820.782.00
			1	22	22	30				GENERATOR UNIT MCH	J07		1.820.725.00
			1	22	23	28A				CONTROLLER EXTERNAL NRS	J08		1.820.816.00
			1	22	24	28B				BUS DRIVER MCH	J09		1.820.723.00
			1	22	25	28A				FLOPPY DISK CONTROLLER	J10		1.820.726.00
TA-ADR2			1	21	20	29				COMMUNICATIONS CONTROLLER	J05		1.820.718.00
			1	21	21	29				MPU AUDIO CONTROL MCH	J06		1.820.782.00
			1	21	22	29				GENERATOR UNIT MCH	J07		1.820.725.00
			1	21	23	27B				CONTROLLER EXTERNAL NRS	J08		1.820.816.00
			1	21	24	27C				BUS DRIVER MCH	J09		1.820.723.00
			1	22	20	29				COMMUNICATIONS CONTROLLER	J05		1.820.718.00
			1	22	21	29				MPU AUDIO CONTROL MCH	J06		1.820.782.00
			1	22	22	29				GENERATOR UNIT MCH	J07		1.820.725.00
			1	22	23	27B				CONTROLLER EXTERNAL NRS	J08		1.820.816.00
			1	22	24	27C				BUS DRIVER MCH	J09		1.820.723.00
			1	22	25	27B				FLOPPY DISK CONTROLLER	J10		1.820.726.00

* WILLI STUDER AG * S I G N A L W I R E L I S T * 89/07/20 * 9:25 * P A G E 213 *
* * TAPE TRANSPORT & AUDIO MCH * * 89/04/19 - 00 *

SIGNAL NAME	COLOR	MI	ASY	GRP	ELM	PNT	S	LV	TYPE	DESCRIPTION OF ELEMENT		REMARK	ELEMENT NR.
TA-ADR3			1	21	21	6				MPU AUDIO CONTROL MCH	J06		1.820.782.00
			1	21	23	27A				CONTROLLER EXTERNAL NRS	J08		1.820.816.00
			1	21	24	27B				BUS DRIVER MCH	J09		1.820.723.00
			1	22	21	6				MPU AUDIO CONTROL MCH	J06		1.820.782.00
			1	22	23	27A				CONTROLLER EXTERNAL NRS	J08		1.820.816.00
			1	22	24	27B				BUS DRIVER MCH	J09		1.820.723.00
			1	22	25	27A				FLOPPY DISK CONTROLLER	J10		1.820.726.00
TA-AUIR			1	20	48	21B				MASTER SERIAL INTERFACE	J09		1.820.753.00
			1	20	51	11A				MASTER TO AUDIO INTERFACE	J12		1.820.756.00
TA-CLMAB			3	1	21	1B				BUS CONVERTER	J21		1.820.717.00
			3	1	70	12					P01		
			3	2	21	1B				BUS CONVERTER	J21		1.820.717.00
			3	2	70	12					P01		
TA-CLMCD			4	1	21	1B				BUS CONVERTER	J21		1.820.717.00
			4	1	70	12					P01		
			4	2	21	1B				BUS CONVERTER	J21		1.820.717.00
			4	2	70	12					P01		
TA-CLMEF			5	1	21	1B				BUS CONVERTER	J21		1.820.717.00
			5	1	70	12					P01		
			5	2	21	1B				BUS CONVERTER	J21		1.820.717.00
			5	2	70	12					P01		
TA-CLPAB			3	1	21	1A				BUS CONVERTER	J21		1.820.717.00
			3	1	70	11					P01		
			3	2	21	1A				BUS CONVERTER	J21		1.820.717.00
			3	2	70	11					P01		
TA-CLPCD			4	1	21	1A				BUS CONVERTER	J21		1.820.717.00
			4	1	70	11					P01		
			4	2	21	1A				BUS CONVERTER	J21		1.820.717.00
			4	2	70	11					P01		
TA-CLPEF			5	1	21	1A				BUS CONVERTER	J21		1.820.717.00
			5	1	70	11					P01		
			5	2	21	1A				BUS CONVERTER	J21		1.820.717.00
			5	2	70	11					P01		
TA-CMP01			3	1	2	22A				CONTROLLER INTERNAL NRS CH 1	J02		1.820.815.00
			3	1	21	10A				BUS CONVERTER	J21		1.820.717.00
TA-CMP02			3	1	7	22A				CONTROLLER INTERNAL NRS CH 2	J07		1.820.815.00
			3	1	21	10B				BUS CONVERTER	J21		1.820.717.00
TA-CMP03			3	1	12	22A				CONTROLLER INTERNAL NRS CH 3	J12		1.820.815.00
			3	1	21	11A				BUS CONVERTER	J21		1.820.717.00
TA-CMP04			3	1	17	22A				CONTROLLER INTERNAL NRS CH 4	J17		1.820.815.00
			3	1	21	11B				BUS CONVERTER	J21		1.820.717.00
TA-CMP05			3	2	2	22A				CONTROLLER INTERNAL NRS CH 5	J02		1.820.815.00
			3	2	21	10A				BUS CONVERTER	J21		1.820.717.00

* WILLI STUDER AG * S I G N A L W I R E L I S T * 89/07/20 * 9:25 * P A G E 214 *
* * TAPE TRANSPORT & AUDIO MCH * * 89/04/19 - 00 *

SIGNAL NAME	COLOR	MI	ASY	GRP	ELM	PNT	S	LV	TYPE	DESCRIPTION OF ELEMENT		REMARK	ELEMENT NR.
TA-CMP06			3	2	7	22A				CONTROLLER INTERNAL NRS CH 6	J07		1.820.815.00
			3	2	21	10B				BUS CONVERTER	J21		1.820.717.00
TA-CMP07			3	2	12	22A				CONTROLLER INTERNAL NRS CH 7	J12		1.820.815.00
			3	2	21	11A				BUS CONVERTER	J21		1.820.717.00
TA-CMP08			3	2	17	22A				CONTROLLER INTERNAL NRS CH 8	J17		1.820.815.00
			3	2	21	11B				BUS CONVERTER	J21		1.820.717.00
TA-CMP09			4	1	2	22A				CONTROLLER INTERNAL NRS CH 9	J02		1.820.815.00
			4	1	21	10A				BUS CONVERTER	J21		1.820.717.00
TA-CMP10			4	1	7	22A				CONTROLLER INTERNAL NRS CH10	J07		1.820.815.00
			4	1	21	10B				BUS CONVERTER	J21		1.820.717.00
TA-CMP11			4	1	12	22A				CONTROLLER INTERNAL NRS CH11	J12		1.820.815.00
			4	1	21	11A				BUS CONVERTER	J21		1.820.717.00
TA-CMP12			4	1	17	22A				CONTROLLER INTERNAL NRS CH12	J17		1.820.815.00
			4	1	21	11B				BUS CONVERTER	J21		1.820.717.00
TA-CMP13			4	2	2	22A				CONTROLLER INTERNAL NRS CH13	J02		1.820.815.00
			4	2	21	10A				BUS CONVERTER	J21		1.820.717.00
TA-CMP14			4	2	7	22A				CONTROLLER INTERNAL NRS CH14	J07		1.820.815.00
			4	2	21	10B				BUS CONVERTER	J21		1.820.717.00
TA-CMP15			4	2	12	22A				CONTROLLER INTERNAL NRS CH15	J12		1.820.815.00
			4	2	21	11A				BUS CONVERTER	J21		1.820.717.00
TA-CMP16			4	2	17	22A				CONTROLLER INTERNAL NRS CH16	J17		1.820.815.00
			4	2	21	11B				BUS CONVERTER	J21		1.820.717.00
TA-CMP17			5	1	2	22A				CONTROLLER INTERNAL NRS CH17	J02		1.820.815.00
			5	1	21	10A				BUS CONVERTER	J21		1.820.717.00
TA-CMP18			5	1	7	22A				CONTROLLER INTERNAL NRS CH18	J07		1.820.815.00
			5	1	21	10B				BUS CONVERTER	J21		1.820.717.00
TA-CMP19			5	1	12	22A				CONTROLLER INTERNAL NRS CH19	J12		1.820.815.00
			5	1	21	11A				BUS CONVERTER	J21		1.820.717.00
TA-CMP20			5	1	17	22A				CONTROLLER INTERNAL NRS CH20	J17		1.820.815.00
			5	1	21	11B				BUS CONVERTER	J21		1.820.717.00
TA-CMP21			5	2	2	22A				CONTROLLER INTERNAL NRS CH21	J02		1.820.815.00
			5	2	21	10A				BUS CONVERTER	J21		1.820.717.00
TA-CMP22			5	2	7	22A				CONTROLLER INTERNAL NRS CH22	J07		1.820.815.00
			5	2	21	10B				BUS CONVERTER	J21		1.820.717.00
TA-CMP23			5	2	12	22A				CONTROLLER INTERNAL NRS CH23	J12		1.820.815.00
			5	2	21	11A				BUS CONVERTER	J21		1.820.717.00
TA-CMP24			5	2	17	22A				CONTROLLER INTERNAL NRS CH24	J17		1.820.815.00
			5	2	21	11B				BUS CONVERTER	J21		1.820.717.00

```
*    WILLI STUDER AG    *    S I G N A L    W I R E    L I S T              * 89/07/20  *   9:25  *  P A G E 215   *
*                                * TAPE TRANSPORT & AUDIO MCH *                * 89/04/19 - 00                      *
```

SIGNAL NAME	COLOR	MI	ASY	GRP	ELM	PNT	S	LV	TYPE	DESCRIPTION OF ELEMENT		REMARK	ELEMENT NR.
TA-C307K			3	1	1	25				LINE AMPLIFIER, CH 1	J01		1.820.715.00
			3	1	2	21A				CONTROLLER INTERNAL NRS CH 1	J02		1.820.815.00
			3	1	3	25				REPRODUCE AMPLIFIER, CH 1	J03		1.820.710.00
			3	1	4	25				RECORD AMPLIFIER, CH 1	J04		1.820.811.00
			3	1	5	25				HF-DRIVER, CH 1	J05		1.820.813.00
			3	1	6	25				LINE AMPLIFIER, CH 2	J06		1.820.715.00
			3	1	7	21A				CONTROLLER INTERNAL NRS CH 2	J07		1.820.815.00
			3	1	8	25				REPRODUCE AMPLIFIER, CH 2	J08		1.820.710.00
			3	1	9	25				RECORD AMPLIFIER, CH 2	J09		1.820.811.00
			3	1	10	25				HF-DRIVER, CH 2	J10		1.820.813.00
			3	1	11	25				LINE AMPLIFIER, CH 3	J11		1.820.715.00
			3	1	12	21A				CONTROLLER INTERNAL NRS CH 3	J12		1.820.815.00
			3	1	13	25				REPRODUCE AMPLIFIER, CH 3	J13		1.820.710.00
			3	1	14	25				RECORD AMPLIFIER, CH 3	J14		1.820.811.00
			3	1	15	25				HF-DRIVER, CH 3	J15		1.820.813.00
			3	1	16	25				LINE AMPLIFIER, CH 4	J16		1.820.715.00
			3	1	17	21A				CONTROLLER INTERNAL NRS CH 4	J17		1.820.815.00
			3	1	18	25				REPRODUCE AMPLIFIER, CH 4	J18		1.820.710.00
			3	1	19	25				RECORD AMPLIFIER, CH 4	J19		1.820.811.00
			3	1	20	25				HF-DRIVER, CH 4	J20		1.820.813.00
			3	1	21	19A				BUS CONVERTER	J21		1.820.717.00
			3	2	1	25				LINE AMPLIFIER, CH 5	J01		1.820.715.00
			3	2	2	21A				CONTROLLER INTERNAL NRS CH 5	J02		1.820.815.00
			3	2	3	25				REPRODUCE AMPLIFIER, CH 5	J03		1.820.710.00
			3	2	4	25				RECORD AMPLIFIER, CH 5	J04		1.820.811.00
			3	2	5	25				HF-DRIVER, CH 5	J05		1.820.813.00
			3	2	6	25				LINE AMPLIFIER, CH 6	J06		1.820.715.00
			3	2	7	21A				CONTROLLER INTERNAL NRS CH 6	J07		1.820.815.00
			3	2	8	25				REPRODUCE AMPLIFIER, CH 6	J08		1.820.710.00
			3	2	9	25				RECORD AMPLIFIER, CH 6	J09		1.820.811.00
			3	2	10	25				HF-DRIVER, CH 6	J10		1.820.813.00
			3	2	11	25				LINE AMPLIFIER, CH 7	J11		1.820.715.00
			3	2	12	21A				CONTROLLER INTERNAL NRS CH 7	J12		1.820.815.00
			3	2	13	25				REPRODUCE AMPLIFIER, CH 7	J13		1.820.710.00
			3	2	14	25				RECORD AMPLIFIER, CH 7	J14		1.820.811.00
			3	2	15	25				HF-DRIVER, CH 7	J15		1.820.813.00
			3	2	16	25				LINE AMPLIFIER, CH 8	J16		1.820.715.00
			3	2	17	21A				CONTROLLER INTERNAL NRS CH 8	J17		1.820.815.00
			3	2	18	25				REPRODUCE AMPLIFIER, CH 8	J18		1.820.710.00
			3	2	19	25				RECORD AMPLIFIER, CH 8	J19		1.820.811.00
			3	2	20	25				HF-DRIVER, CH 8	J20		1.820.813.00
			3	2	21	19A				BUS CONVERTER	J21		1.820.717.00
			4	1	1	25				LINE AMPLIFIER, CH 9	J01		1.820.715.00
			4	1	2	21A				CONTROLLER INTERNAL NRS CH 9	J02		1.820.815.00
			4	1	3	25				REPRODUCE AMPLIFIER, CH 9	J03		1.820.710.00
			4	1	4	25				RECORD AMPLIFIER, CH 9	J04		1.820.811.00
			4	1	5	25				HF-DRIVER, CH 9	J05		1.820.813.00
			4	1	6	25				LINE AMPLIFIER, CH10	J06		1.820.715.00
			4	1	7	21A				CONTROLLER INTERNAL NRS CH10	J07		1.820.815.00
			4	1	8	25				REPRODUCE AMPLIFIER, CH10	J08		1.820.710.00
			4	1	9	25				RECORD AMPLIFIER, CH10	J09		1.820.811.00
			4	1	10	25				HF-DRIVER, CH10	J10		1.820.813.00
			4	1	11	25				LINE AMPLIFIER, CH11	J11		1.820.715.00
			4	1	12	21A				CONTROLLER INTERNAL NRS CH11	J12		1.820.815.00
			4	1	13	25				REPRODUCE AMPLIFIER, CH11	J13		1.820.710.00

```
*    WILLI STUDER AG    *    S I G N A L    W I R E    L I S T              * 89/07/20  *   9:25  *  P A G E 216   *
*                                * TAPE TRANSPORT & AUDIO MCH *                * 89/04/19 - 00                      *
```

SIGNAL NAME	COLOR	MI	ASY	GRP	ELM	PNT	S	LV	TYPE	DESCRIPTION OF ELEMENT		REMARK	ELEMENT NR.
<<-- CONT.OF			4	1	14	25				RECORD AMPLIFIER, CH11	J14		1.820.811.00
TA-C307K			4	1	15	25				HF-DRIVER, CH11	J15		1.820.813.00
			4	1	16	25				LINE AMPLIFIER, CH12	J16		1.820.715.00
			4	1	17	21A				CONTROLLER INTERNAL NRS CH12	J17		1.820.815.00
			4	1	18	25				REPRODUCE AMPLIFIER, CH12	J18		1.820.710.00
			4	1	19	25				RECORD AMPLIFIER, CH12	J19		1.820.811.00
			4	1	20	25				HF-DRIVER, CH12	J20		1.820.813.00
			4	1	21	19A				BUS CONVERTER	J21		1.820.717.00
			4	2	1	25				LINE AMPLIFIER, CH13	J01		1.820.715.00
			4	2	2	21A				CONTROLLER INTERNAL NRS CH13	J02		1.820.815.00
			4	2	3	25				REPRODUCE AMPLIFIER, CH13	J03		1.820.710.00
			4	2	4	25				RECORD AMPLIFIER, CH13	J04		1.820.811.00
			4	2	5	25				HF-DRIVER, CH13	J05		1.820.813.00
			4	2	6	25				LINE AMPLIFIER, CH14	J06		1.820.715.00
			4	2	7	21A				CONTROLLER INTERNAL NRS CH14	J07		1.820.815.00
			4	2	8	25				REPRODUCE AMPLIFIER, CH14	J08		1.820.710.00
			4	2	9	25				RECORD AMPLIFIER, CH14	J09		1.820.811.00
			4	2	10	25				HF-DRIVER, CH14	J10		1.820.813.00
			4	2	11	25				LINE AMPLIFIER, CH15	J11		1.820.715.00
			4	2	12	21A				CONTROLLER INTERNAL NRS CH15	J12		1.820.815.00
			4	2	13	25				REPRODUCE AMPLIFIER, CH15	J13		1.820.710.00
			4	2	14	25				RECORD AMPLIFIER, CH15	J14		1.820.811.00
			4	2	15	25				HF-DRIVER, CH15	J15		1.820.813.00
			4	2	16	25				LINE AMPLIFIER, CH16	J16		1.820.715.00
			4	2	17	21A				CONTROLLER INTERNAL NRS CH16	J17		1.820.815.00
			4	2	18	25				REPRODUCE AMPLIFIER, CH16	J18		1.820.710.00
			4	2	19	25				RECORD AMPLIFIER, CH16	J19		1.820.811.00
			4	2	20	25				HF-DRIVER, CH16	J20		1.820.813.00
			4	2	21	19A				BUS CONVERTER	J21		1.820.717.00
			5	1	1	25				LINE AMPLIFIER, CH17	J01		1.820.715.00
			5	1	2	21A				CONTROLLER INTERNAL NRS CH17	J02		1.820.815.00
			5	1	3	25				REPRODUCE AMPLIFIER, CH17	J03		1.820.710.00
			5	1	4	25				RECORD AMPLIFIER, CH17	J04		1.820.811.00
			5	1	5	25				HF-DRIVER, CH17	J05		1.820.813.00
			5	1	6	25				LINE AMPLIFIER, CH18	J06		1.820.715.00
			5	1	7	21A				CONTROLLER INTERNAL NRS CH18	J07		1.820.815.00
			5	1	8	25				REPRODUCE AMPLIFIER, CH18	J08		1.820.710.00
			5	1	9	25				RECORD AMPLIFIER, CH18	J09		1.820.811.00
			5	1	10	25				HF-DRIVER, CH18	J10		1.820.813.00
			5	1	11	25				LINE AMPLIFIER, CH19	J11		1.820.715.00
			5	1	12	21A				CONTROLLER INTERNAL NRS CH19	J12		1.820.815.00
			5	1	13	25				REPRODUCE AMPLIFIER, CH19	J13		1.820.710.00
			5	1	14	25				RECORD AMPLIFIER, CH19	J14		1.820.811.00
			5	1	15	25				HF-DRIVER, CH19	J15		1.820.813.00
			5	1	16	25				LINE AMPLIFIER, CH20	J16		1.820.715.00
			5	1	17	21A				CONTROLLER INTERNAL NRS CH20	J17		1.820.815.00
			5	1	18	25				REPRODUCE AMPLIFIER, CH20	J18		1.820.710.00
			5	1	19	25				RECORD AMPLIFIER, CH20	J19		1.820.811.00
			5	1	20	25				HF-DRIVER, CH20	J20		1.820.813.00
			5	1	21	19A				BUS CONVERTER	J21		1.820.717.00
			5	2	1	25				LINE AMPLIFIER, CH21	J01		1.820.715.00
			5	2	2	21A				CONTROLLER INTERNAL NRS CH21	J02		1.820.815.00
			5	2	3	25				REPRODUCE AMPLIFIER, CH21	J03		1.820.710.00
			5	2	4	25				RECORD AMPLIFIER, CH21	J04		1.820.811.00

SIGNAL NAME	COLOR	MI	ASY	GRP	ELM	PNT	S	LV	TYPE	DESCRIPTION OF ELEMENT		REMARK	ELEMENT NR.
<<-- CONT.OF			5	2	5	25				HF-DRIVER, CH21	J05		1.820.813.00
TA-C307K			5	2	6	25				LINE AMPLIFIER, CH22	J06		1.820.715.00
			5	2	7	21A				CONTROLLER INTERNAL NRS CH22	J07		1.820.815.00
			5	2	8	25				REPRODUCE AMPLIFIER, CH22	J08		1.820.710.00
			5	2	9	25				RECORD AMPLIFIER, CH22	J09		1.820.811.00
			5	2	10	25				HF-DRIVER, CH22	J10		1.820.813.00
			5	2	11	25				LINE AMPLIFIER, CH23	J11		1.820.715.00
			5	2	12	21A				CONTROLLER INTERNAL NRS CH23	J12		1.820.815.00
			5	2	13	25				REPRODUCE AMPLIFIER, CH23	J13		1.820.710.00
			5	2	14	25				RECORD AMPLIFIER, CH23	J14		1.820.811.00
			5	2	15	25				HF-DRIVER, CH23	J15		1.820.813.00
			5	2	16	25				LINE AMPLIFIER, CH24	J16		1.820.715.00
			5	2	17	21A				CONTROLLER INTERNAL NRS CH24	J17		1.820.815.00
			5	2	18	25				REPRODUCE AMPLIFIER, CH24	J18		1.820.710.00
			5	2	19	25				RECORD AMPLIFIER, CH24	J19		1.820.811.00
			5	2	20	25				HF-DRIVER, CH24	J20		1.820.813.00
			5	2	21	19A				BUS CONVERTER	J21		1.820.717.00
TA-C614K			1	21	20	17				COMMUNICATIONS CONTROLLER	J05		1.820.718.00
			1	21	21	22				MPU AUDIO CONTROL MCH	J06		1.820.782.00
			1	22	20	17				COMMUNICATIONS CONTROLLER	J05		1.820.718.00
			1	22	21	22				MPU AUDIO CONTROL MCH	J06		1.820.782.00
TA-C76K			1	21	21	16				MPU AUDIO CONTROL MCH	J06		1.820.782.00
			1	22	21	16				MPU AUDIO CONTROL MCH	J06		1.820.782.00
TA-DATA0			1	21	20	39				COMMUNICATIONS CONTROLLER	J05		1.820.718.00
			1	21	21	39				MPU AUDIO CONTROL MCH	J06		1.820.782.00
			1	21	22	39				GENERATOR UNIT MCH	J07		1.820.725.00
			1	21	23	32B				CONTROLLER EXTERNAL NRS	J08		1.820.816.00
			1	21	24	32C				BUS DRIVER MCH	J09		1.820.723.00
			1	22	20	39				COMMUNICATIONS CONTROLLER	J05		1.820.718.00
			1	22	21	39				MPU AUDIO CONTROL MCH	J06		1.820.782.00
			1	22	22	39				GENERATOR UNIT MCH	J07		1.820.725.00
			1	22	23	32B				CONTROLLER EXTERNAL NRS	J08		1.820.816.00
			1	22	24	32C				BUS DRIVER MCH	J09		1.820.723.00
			1	22	25	32B				FLOPPY DISK CONTROLLER	J10		1.820.726.00
TA-DATA1			1	21	20	38				COMMUNICATIONS CONTROLLER	J05		1.820.718.00
			1	21	21	38				MPU AUDIO CONTROL MCH	J06		1.820.782.00
			1	21	22	38				GENERATOR UNIT MCH	J07		1.820.725.00
			1	21	23	32A				CONTROLLER EXTERNAL NRS	J08		1.820.816.00
			1	21	24	32B				BUS DRIVER MCH	J09		1.820.723.00
			1	22	20	38				COMMUNICATIONS CONTROLLER	J05		1.820.718.00
			1	22	21	38				MPU AUDIO CONTROL MCH	J06		1.820.782.00
			1	22	22	38				GENERATOR UNIT MCH	J07		1.820.725.00
			1	22	23	32A				CONTROLLER EXTERNAL NRS	J08		1.820.816.00
			1	22	24	32B				BUS DRIVER MCH	J09		1.820.723.00
			1	22	25	32A				FLOPPY DISK CONTROLLER	J10		1.820.726.00
TA-DATA2			1	21	20	37				COMMUNICATIONS CONTROLLER	J05		1.820.718.00
			1	21	21	37				MPU AUDIO CONTROL MCH	J06		1.820.782.00
			1	21	22	37				GENERATOR UNIT MCH	J07		1.820.725.00
			1	21	23	31B				CONTROLLER EXTERNAL NRS	J08		1.820.816.00

SIGNAL NAME	COLOR	MI	ASY	GRP	ELM	PNT	S	LV	TYPE	DESCRIPTION OF ELEMENT		REMARK	ELEMENT NR.
<<-- CONT.OF			1	21	24	31C				BUS DRIVER MCH	J09		1.820.723.00
TA-DATA2			1	22	20	37				COMMUNICATIONS CONTROLLER	J05		1.820.718.00
			1	22	21	37				MPU AUDIO CONTROL MCH	J06		1.820.782.00
			1	22	22	37				GENERATOR UNIT MCH	J07		1.820.725.00
			1	22	23	31B				CONTROLLER EXTERNAL NRS	J08		1.820.816.00
			1	22	24	31C				BUS DRIVER MCH	J09		1.820.723.00
			1	22	25	31B				FLOPPY DISK CONTROLLER	J10		1.820.726.00
TA-DATA3			1	21	20	36				COMMUNICATIONS CONTROLLER	J05		1.820.718.00
			1	21	21	36				MPU AUDIO CONTROL MCH	J06		1.820.782.00
			1	21	22	36				GENERATOR UNIT MCH	J07		1.820.725.00
			1	21	23	31A				CONTROLLER EXTERNAL NRS	J08		1.820.816.00
			1	21	24	31B				BUS DRIVER MCH	J09		1.820.723.00
			1	22	20	36				COMMUNICATIONS CONTROLLER	J05		1.820.718.00
			1	22	21	36				MPU AUDIO CONTROL MCH	J06		1.820.782.00
			1	22	22	36				GENERATOR UNIT MCH	J07		1.820.725.00
			1	22	23	31A				CONTROLLER EXTERNAL NRS	J08		1.820.816.00
			1	22	24	31B				BUS DRIVER MCH	J09		1.820.723.00
			1	22	25	31A				FLOPPY DISK CONTROLLER	J10		1.820.726.00
TA-DATA4			1	21	20	35				COMMUNICATIONS CONTROLLER	J05		1.820.718.00
			1	21	21	35				MPU AUDIO CONTROL MCH	J06		1.820.782.00
			1	21	22	35				GENERATOR UNIT MCH	J07		1.820.725.00
			1	21	23	30B				CONTROLLER EXTERNAL NRS	J08		1.820.816.00
			1	21	24	30C				BUS DRIVER MCH	J09		1.820.723.00
			1	22	20	35				COMMUNICATIONS CONTROLLER	J05		1.820.718.00
			1	22	21	35				MPU AUDIO CONTROL MCH	J06		1.820.782.00
			1	22	22	35				GENERATOR UNIT MCH	J07		1.820.725.00
			1	22	23	30B				CONTROLLER EXTERNAL NRS	J08		1.820.816.00
			1	22	24	30C				BUS DRIVER MCH	J09		1.820.723.00
			1	22	25	30B				FLOPPY DISK CONTROLLER	J10		1.820.726.00
TA-DATA5			1	21	20	34				COMMUNICATIONS CONTROLLER	J05		1.820.718.00
			1	21	21	34				MPU AUDIO CONTROL MCH	J06		1.820.782.00
			1	21	22	34				GENERATOR UNIT MCH	J07		1.820.725.00
			1	21	23	30A				CONTROLLER EXTERNAL NRS	J08		1.820.816.00
			1	21	24	30B				BUS DRIVER MCH	J09		1.820.723.00
			1	22	20	34				COMMUNICATIONS CONTROLLER	J05		1.820.718.00
			1	22	21	34				MPU AUDIO CONTROL MCH	J06		1.820.782.00
			1	22	22	34				GENERATOR UNIT MCH	J07		1.820.725.00
			1	22	23	30A				CONTROLLER EXTERNAL NRS	J08		1.820.816.00
			1	22	24	30B				BUS DRIVER MCH	J09		1.820.723.00
			1	22	25	30A				FLOPPY DISK CONTROLLER	J10		1.820.726.00
TA-DATA6			1	21	20	33				COMMUNICATIONS CONTROLLER	J05		1.820.718.00
			1	21	21	33				MPU AUDIO CONTROL MCH	J06		1.820.782.00
			1	21	22	33				GENERATOR UNIT MCH	J07		1.820.725.00
			1	21	23	29B				CONTROLLER EXTERNAL NRS	J08		1.820.816.00
			1	21	24	29C				BUS DRIVER MCH	J09		1.820.723.00
			1	22	20	33				COMMUNICATIONS CONTROLLER	J05		1.820.718.00
			1	22	21	33				MPU AUDIO CONTROL MCH	J06		1.820.782.00
			1	22	22	33				GENERATOR UNIT MCH	J07		1.820.725.00
			1	22	23	29B				CONTROLLER EXTERNAL NRS	J08		1.820.816.00
			1	22	24	29C				BUS DRIVER MCH	J09		1.820.723.00
			1	22	25	29B				FLOPPY DISK CONTROLLER	J10		1.820.726.00

* WILLI STUDER AG * S I G N A L W I R E L I S T * 89/07/20 * 9:25 * P A G E 219 *

* * TAPE TRANSPORT & AUDIO MCH * * 89/04/19 - 00 *

SIGNAL NAME	COLOR	MI	ASY	GRP	ELM	PNT	S	LV	TYPE	DESCRIPTION OF ELEMENT		REMARK	ELEMENT NR.
TA-DATA7			1	21	20	32				COMMUNICATIONS CONTROLLER	J05		1.820.718.00
			1	21	21	32				MPU AUDIO CONTROL MCH	J06		1.820.782.00
			1	21	22	32				GENERATOR UNIT MCH	J07		1.820.725.00
			1	21	23	29A				CONTROLLER EXTERNAL NRS	J08		1.820.816.00
			1	21	24	29B				BUS DRIVER MCH	J09		1.820.723.00
			1	22	20	32				COMMUNICATIONS CONTROLLER	J05		1.820.718.00
			1	22	21	32				MPU AUDIO CONTROL MCH	J06		1.820.782.00
			1	22	22	32				GENERATOR UNIT MCH	J07		1.820.725.00
			1	22	23	29A				CONTROLLER EXTERNAL NRS	J08		1.820.816.00
			1	22	24	29B				BUS DRIVER MCH	J09		1.820.723.00
			1	22	25	29A				FLOPPY DISK CONTROLLER	J10		1.820.726.00
TA-DRENB			1	21	21	12				MPU AUDIO CONTROL MCH	J06		1.820.782.00
			1	22	21	12				MPU AUDIO CONTROL MCH	J06		1.820.782.00
TA-ENB			1	21	20	28				COMMUNICATIONS CONTROLLER	J05		1.820.718.00
			1	21	21	28				MPU AUDIO CONTROL MCH	J06		1.820.782.00
			1	21	22	28				GENERATOR UNIT MCH	J07		1.820.725.00
			1	21	23	26B				CONTROLLER EXTERNAL NRS	J08		1.820.816.00
			1	21	24	26C				BUS DRIVER MCH	J09		1.820.723.00
			1	22	20	28				COMMUNICATIONS CONTROLLER	J05		1.820.718.00
			1	22	21	28				MPU AUDIO CONTROL MCH	J06		1.820.782.00
			1	22	22	28				GENERATOR UNIT MCH	J07		1.820.725.00
			1	22	23	26B				CONTROLLER EXTERNAL NRS	J08		1.820.816.00
			1	22	24	26C				BUS DRIVER MCH	J09		1.820.723.00
			1	22	25	26B				FLOPPY DISK CONTROLLER	J10		1.820.726.00
TA-IRQ			1	21	20	14				COMMUNICATIONS CONTROLLER	J05		1.820.718.00
			1	21	21	13				MPU AUDIO CONTROL MCH	J06		1.820.782.00
			1	22	20	14				COMMUNICATIONS CONTROLLER	J05		1.820.718.00
			1	22	21	13				MPU AUDIO CONTROL MCH	J06		1.820.782.00
TA-NMI			1	21	21	9				MPU AUDIO CONTROL MCH	J06		1.820.782.00
			1	22	21	9				MPU AUDIO CONTROL MCH	J06		1.820.782.00
TA-OUTP0			1	20	32	12				BASIS BOARD AUDIO CONT. ELM15	P24		
			1	21	15	12				TAPE DECK BASIS BOARD, ELM32	P08		
			1	21	20	4				COMMUNICATIONS CONTROLLER	J05		1.820.718.00
			1	22	15	12				TAPE DECK BASIS BOARD, ELM32	P08		
			1	22	20	4				COMMUNICATIONS CONTROLLER	J05		1.820.718.00
TA-RESET			1	21	21	26				MPU AUDIO CONTROL MCH	J06		1.820.782.00
			1	21	24	25B				BUS DRIVER MCH	J09		1.820.723.00
			1	22	21	26				MPU AUDIO CONTROL MCH	J06		1.820.782.00
			1	22	24	25B				BUS DRIVER MCH	J09		1.820.723.00
TA-RESMP			1	21	20	26				COMMUNICATIONS CONTROLLER	J05		1.820.718.00
			1	21	21	5				MPU AUDIO CONTROL MCH	J06		1.820.782.00
			1	21	23	25A				CONTROLLER EXTERNAL NRS	J08		1.820.816.00
			1	22	20	26				COMMUNICATIONS CONTROLLER	J05		1.820.718.00
			1	22	21	5				MPU AUDIO CONTROL MCH	J06		1.820.782.00
			1	22	23	25A				CONTROLLER EXTERNAL NRS	J08		1.820.816.00
			1	22	25	25A				FLOPPY DISK CONTROLLER	J10		1.820.726.00

* WILLI STUDER AG * S I G N A L W I R E L I S T * 89/07/20 * 9:25 * P A G E 220 *

* * TAPE TRANSPORT & AUDIO MCH * * 89/04/19 - 00 *

SIGNAL NAME	COLOR	MI	ASY	GRP	ELM	PNT	S	LV	TYPE	DESCRIPTION OF ELEMENT		REMARK	ELEMENT NR.
TA-RW			1	21	20	27				COMMUNICATIONS CONTROLLER	J05		1.820.718.00
			1	21	21	27				MPU AUDIO CONTROL MCH	J06		1.820.782.00
			1	21	22	27				GENERATOR UNIT MCH	J07		1.820.725.00
			1	21	23	26A				CONTROLLER EXTERNAL NRS	J08		1.820.816.00
			1	21	24	26B				BUS DRIVER MCH	J09		1.820.723.00
			1	22	20	27				COMMUNICATIONS CONTROLLER	J05		1.820.718.00
			1	22	21	27				MPU AUDIO CONTROL MCH	J06		1.820.782.00
			1	22	22	27				GENERATOR UNIT MCH	J07		1.820.725.00
			1	22	23	26A				CONTROLLER EXTERNAL NRS	J08		1.820.816.00
			1	22	24	26B				BUS DRIVER MCH	J09		1.820.723.00
			1	22	25	26A				FLOPPY DISK CONTROLLER	J10		1.820.726.00
TA-RX			1	21	20	15				COMMUNICATIONS CONTROLLER	J05		1.820.718.00
			1	21	21	10				MPU AUDIO CONTROL MCH	J06		1.820.782.00
			1	22	20	15				COMMUNICATIONS CONTROLLER	J05		1.820.718.00
			1	22	21	10				MPU AUDIO CONTROL MCH	J06		1.820.782.00
TA-SL2			1	21	21	4				MPU AUDIO CONTROL MCH	J06		1.820.782.00
			1	21	23	25B				CONTROLLER EXTERNAL NRS	J08		1.820.816.00
			1	22	21	4				MPU AUDIO CONTROL MCH	J06		1.820.782.00
			1	22	23	25B				CONTROLLER EXTERNAL NRS	J08		1.820.816.00
			1	22	25	25B				FLOPPY DISK CONTROLLER	J10		1.820.726.00
TA-SL3			1	21	21	3				MPU AUDIO CONTROL MCH	J06		1.820.782.00
			1	22	21	3				MPU AUDIO CONTROL MCH	J06		1.820.782.00
			1	22	25	24A				FLOPPY DISK CONTROLLER	J10		1.820.726.00
TA-SL4			1	21	21	23				MPU AUDIO CONTROL MCH	J06		1.820.782.00
			1	21	24	25C				BUS DRIVER MCH	J09		1.820.723.00
			1	22	21	23				MPU AUDIO CONTROL MCH	J06		1.820.782.00
			1	22	24	25C				BUS DRIVER MCH	J09		1.820.723.00
TA-SL5			1	21	21	24				MPU AUDIO CONTROL MCH	J06		1.820.782.00
			1	22	21	24				MPU AUDIO CONTROL MCH	J06		1.820.782.00
TA-SL6			1	21	21	25				MPU AUDIO CONTROL MCH	J06		1.820.782.00
			1	21	22	25				GENERATOR UNIT MCH	J07		1.820.725.00
			1	22	21	25				MPU AUDIO CONTROL MCH	J06		1.820.782.00
			1	22	22	25				GENERATOR UNIT MCH	J07		1.820.725.00
TA-SL7			1	21	20	25				COMMUNICATIONS CONTROLLER	J05		1.820.718.00
			1	21	21	15				MPU AUDIO CONTROL MCH	J06		1.820.782.00
			1	22	20	25				COMMUNICATIONS CONTROLLER	J05		1.820.718.00
			1	22	21	15				MPU AUDIO CONTROL MCH	J06		1.820.782.00
TA-TX			1	21	20	16				COMMUNICATIONS CONTROLLER	J05		1.820.718.00
			1	21	21	11				MPU AUDIO CONTROL MCH	J06		1.820.782.00
			1	22	20	16				COMMUNICATIONS CONTROLLER	J05		1.820.718.00
			1	22	21	11				MPU AUDIO CONTROL MCH	J06		1.820.782.00
TAD-RESA			1	20	33	2				BASIS BOARD AUDIO CONT. ELM16	P25		
			1	20	51	20B				MASTER TO AUDIO INTERFACE	J12		1.820.756.00
			1	21	16	2				TAPE DECK BASIS BOARD, ELM33	P09		
			1	22	16	2				TAPE DECK BASIS BOARD, ELM33	P09		

* WILLI STUDER AG * S I G N A L W I R E L I S T * 89/07/20 * 9:25 * P A G E 221 *

* * TAPE TRANSPORT & AUDIO MCH * * 89/04/19 - 00 *

SIGNAL NAME	COLOR	MI	ASY	GRP	ELM	PNT	S	LV	TYPE	DESCRIPTION OF ELEMENT		REMARK	ELEMENT NR.
TAD-RESB			1	20	33	4				BASIS BOARD AUDIO CONT. ELM16	P25		
			1	20	51	21B				MASTER TO AUDIO INTERFACE	J12		1.820.756.00
			1	21	16	4				TAPE DECK BASIS BOARD, ELM33	P09		
			1	22	16	4				TAPE DECK BASIS BOARD, ELM33	P09		
TAD-RESC			1	20	33	6				BASIS BOARD AUDIO CONT. ELM16	P25		
			1	20	51	22B				MASTER TO AUDIO INTERFACE	J12		1.820.756.00
			1	21	16	6				TAPE DECK BASIS BOARD, ELM33	P09		
			1	22	16	6				TAPE DECK BASIS BOARD, ELM33	P09		
TAPAD-01			3	1	1	10				LINE AMPLIFIER, CH 1	J01		1.820.715.00
			3	1	2	14A				CONTROLLER INTERNAL NRS CH 1	J02		1.820.815.00
TAPAD-02			3	1	6	10				LINE AMPLIFIER, CH 2	J06		1.820.715.00
			3	1	7	14A				CONTROLLER INTERNAL NRS CH 2	J07		1.820.815.00
TAPAD-03			3	1	11	10				LINE AMPLIFIER, CH 3	J11		1.820.715.00
			3	1	12	14A				CONTROLLER INTERNAL NRS CH 3	J12		1.820.815.00
TAPAD-04			3	1	16	10				LINE AMPLIFIER, CH 4	J16		1.820.715.00
			3	1	17	14A				CONTROLLER INTERNAL NRS CH 4	J17		1.820.815.00
TAPAD-05			3	2	1	10				LINE AMPLIFIER, CH 5	J01		1.820.715.00
			3	2	2	14A				CONTROLLER INTERNAL NRS CH 5	J02		1.820.815.00
TAPAD-06			3	2	6	10				LINE AMPLIFIER, CH 6	J06		1.820.715.00
			3	2	7	14A				CONTROLLER INTERNAL NRS CH 6	J07		1.820.815.00
TAPAD-07			3	2	11	10				LINE AMPLIFIER, CH 7	J11		1.820.715.00
			3	2	12	14A				CONTROLLER INTERNAL NRS CH 7	J12		1.820.815.00
TAPAD-08			3	2	16	10				LINE AMPLIFIER, CH 8	J16		1.820.715.00
			3	2	17	14A				CONTROLLER INTERNAL NRS CH 8	J17		1.820.815.00
TAPAD-09			4	1	1	10				LINE AMPLIFIER, CH 9	J01		1.820.715.00
			4	1	2	14A				CONTROLLER INTERNAL NRS CH 9	J02		1.820.815.00
TAPAD-10			4	1	6	10				LINE AMPLIFIER, CH10	J06		1.820.715.00
			4	1	7	14A				CONTROLLER INTERNAL NRS CH10	J07		1.820.815.00
TAPAD-11			4	1	11	10				LINE AMPLIFIER, CH11	J11		1.820.715.00
			4	1	12	14A				CONTROLLER INTERNAL NRS CH11	J12		1.820.815.00
TAPAD-12			4	1	16	10				LINE AMPLIFIER, CH12	J16		1.820.715.00
			4	1	17	14A				CONTROLLER INTERNAL NRS CH12	J17		1.820.815.00
TAPAD-13			4	2	1	10				LINE AMPLIFIER, CH13	J01		1.820.715.00
			4	2	2	14A				CONTROLLER INTERNAL NRS CH13	J02		1.820.815.00
TAPAD-14			4	2	6	10				LINE AMPLIFIER, CH14	J06		1.820.715.00
			4	2	7	14A				CONTROLLER INTERNAL NRS CH14	J07		1.820.815.00
TAPAD-15			4	2	11	10				LINE AMPLIFIER, CH15	J11		1.820.715.00
			4	2	12	14A				CONTROLLER INTERNAL NRS CH15	J12		1.820.815.00

* WILLI STUDER AG * S I G N A L W I R E L I S T * 89/07/20 * 9:25 * P A G E 222 *

* * TAPE TRANSPORT & AUDIO MCH * * 89/04/19 - 00 *

SIGNAL NAME	COLOR	MI	ASY	GRP	ELM	PNT	S	LV	TYPE	DESCRIPTION OF ELEMENT		REMARK	ELEMENT NR.
TAPAD-16			4	2	16	10				LINE AMPLIFIER, CH16	J16		1.820.715.00
			4	2	17	14A				CONTROLLER INTERNAL NRS CH16	J17		1.820.815.00
TAPAD-17			5	1	1	10				LINE AMPLIFIER, CH17	J01		1.820.715.00
			5	1	2	14A				CONTROLLER INTERNAL NRS CH17	J02		1.820.815.00
TAPAD-18			5	1	6	10				LINE AMPLIFIER, CH18	J06		1.820.715.00
			5	1	7	14A				CONTROLLER INTERNAL NRS CH18	J07		1.820.815.00
TAPAD-19			5	1	11	10				LINE AMPLIFIER, CH19	J11		1.820.715.00
			5	1	12	14A				CONTROLLER INTERNAL NRS CH19	J12		1.820.815.00
TAPAD-20			5	1	16	10				LINE AMPLIFIER, CH20	J16		1.820.715.00
			5	1	17	14A				CONTROLLER INTERNAL NRS CH20	J17		1.820.815.00
TAPAD-21			5	2	1	10				LINE AMPLIFIER, CH21	J01		1.820.715.00
			5	2	2	14A				CONTROLLER INTERNAL NRS CH21	J02		1.820.815.00
TAPAD-22			5	2	6	10				LINE AMPLIFIER, CH22	J06		1.820.715.00
			5	2	7	14A				CONTROLLER INTERNAL NRS CH22	J07		1.820.815.00
TAPAD-23			5	2	11	10				LINE AMPLIFIER, CH23	J11		1.820.715.00
			5	2	12	14A				CONTROLLER INTERNAL NRS CH23	J12		1.820.815.00
TAPAD-24			5	2	16	10				LINE AMPLIFIER, CH24	J16		1.820.715.00
			5	2	17	14A				CONTROLLER INTERNAL NRS CH24	J17		1.820.815.00
TAPDI-01			3	1	1	12				LINE AMPLIFIER, CH 1	J01		1.820.715.00
			3	1	2	14B				CONTROLLER INTERNAL NRS CH 1	J02		1.820.815.00
			3	1	3	10				REPRODUCE AMPLIFIER, CH 1	J03		1.820.710.00
TAPDI-02			3	1	6	12				LINE AMPLIFIER, CH 2	J06		1.820.715.00
			3	1	7	14B				CONTROLLER INTERNAL NRS CH 2	J07		1.820.815.00
			3	1	8	10				REPRODUCE AMPLIFIER, CH 2	J08		1.820.710.00
TAPDI-03			3	1	11	12				LINE AMPLIFIER, CH 3	J11		1.820.715.00
			3	1	12	14B				CONTROLLER INTERNAL NRS CH 3	J12		1.820.815.00
			3	1	13	10				REPRODUCE AMPLIFIER, CH 3	J13		1.820.710.00
TAPDI-04			3	1	16	12				LINE AMPLIFIER, CH 4	J16		1.820.715.00
			3	1	17	14B				CONTROLLER INTERNAL NRS CH 4	J17		1.820.815.00
			3	1	18	10				REPRODUCE AMPLIFIER, CH 4	J18		1.820.710.00
TAPDI-05			3	2	1	12				LINE AMPLIFIER, CH 5	J01		1.820.715.00
			3	2	2	14B				CONTROLLER INTERNAL NRS CH 5	J02		1.820.815.00
			3	2	3	10				REPRODUCE AMPLIFIER, CH 5	J03		1.820.710.00
TAPDI-06			3	2	6	12				LINE AMPLIFIER, CH 6	J06		1.820.715.00
			3	2	7	14B				CONTROLLER INTERNAL NRS CH 6	J07		1.820.815.00
			3	2	8	10				REPRODUCE AMPLIFIER, CH 6	J08		1.820.710.00
TAPDI-07			3	2	11	12				LINE AMPLIFIER, CH 7	J11		1.820.715.00
			3	2	12	14B				CONTROLLER INTERNAL NRS CH 7	J12		1.820.815.00
			3	2	13	10				REPRODUCE AMPLIFIER, CH 7	J13		1.820.710.00

* WILLI STUDER AG * S I G N A L W I R E L I S T * 89/07/20 * 9:25 * P A G E 223 *
* TAPE TRANSPORT & AUDIO MCH * * 89/04/19 - 00 *

SIGNAL NAME	COLOR	MI	ASY	GRP	ELM	PNT	S	LV	TYPE	DESCRIPTION OF ELEMENT		REMARK	ELEMENT NR.
TAPDI-08			3	2	16	12				LINE AMPLIFIER, CH 8	J16		1.820.715.00
			3	2	17	14B				CONTROLLER INTERNAL NRS CH 8	J17		1.820.815.00
			3	2	18	10				REPRODUCE AMPLIFIER, CH 8	J18		1.820.710.00
TAPDI-09			4	1	1	12				LINE AMPLIFIER, CH 9	J01		1.820.715.00
			4	1	2	14B				CONTROLLER INTERNAL NRS CH 9	J02		1.820.815.00
			4	1	3	10				REPRODUCE AMPLIFIER, CH 9	J03		1.820.710.00
TAPDI-10			4	1	6	12				LINE AMPLIFIER, CH10	J06		1.820.715.00
			4	1	7	14B				CONTROLLER INTERNAL NRS CH10	J07		1.820.815.00
			4	1	8	10				REPRODUCE AMPLIFIER, CH10	J08		1.820.710.00
TAPDI-11			4	1	11	12				LINE AMPLIFIER, CH11	J11		1.820.715.00
			4	1	12	14B				CONTROLLER INTERNAL NRS CH11	J12		1.820.815.00
			4	1	13	10				REPRODUCE AMPLIFIER, CH11	J13		1.820.710.00
TAPDI-12			4	1	16	12				LINE AMPLIFIER, CH12	J16		1.820.715.00
			4	1	17	14B				CONTROLLER INTERNAL NRS CH12	J17		1.820.815.00
			4	1	18	10				REPRODUCE AMPLIFIER, CH12	J18		1.820.710.00
TAPDI-13			4	2	1	12				LINE AMPLIFIER, CH13	J01		1.820.715.00
			4	2	2	14B				CONTROLLER INTERNAL NRS CH13	J02		1.820.815.00
			4	2	3	10				REPRODUCE AMPLIFIER, CH13	J03		1.820.710.00
TAPDI-14			4	2	6	12				LINE AMPLIFIER, CH14	J06		1.820.715.00
			4	2	7	14B				CONTROLLER INTERNAL NRS CH14	J07		1.820.815.00
			4	2	8	10				REPRODUCE AMPLIFIER, CH14	J08		1.820.710.00
TAPDI-15			4	2	11	12				LINE AMPLIFIER, CH15	J11		1.820.715.00
			4	2	12	14B				CONTROLLER INTERNAL NRS CH15	J12		1.820.815.00
			4	2	13	10				REPRODUCE AMPLIFIER, CH15	J13		1.820.710.00
TAPDI-16			4	2	16	12				LINE AMPLIFIER, CH16	J16		1.820.715.00
			4	2	17	14B				CONTROLLER INTERNAL NRS CH16	J17		1.820.815.00
			4	2	18	10				REPRODUCE AMPLIFIER, CH16	J18		1.820.710.00
TAPDI-17			5	1	1	12				LINE AMPLIFIER, CH17	J01		1.820.715.00
			5	1	2	14B				CONTROLLER INTERNAL NRS CH17	J02		1.820.815.00
			5	1	3	10				REPRODUCE AMPLIFIER, CH17	J03		1.820.710.00
TAPDI-18			5	1	6	12				LINE AMPLIFIER, CH18	J06		1.820.715.00
			5	1	7	14B				CONTROLLER INTERNAL NRS CH18	J07		1.820.815.00
			5	1	8	10				REPRODUCE AMPLIFIER, CH18	J08		1.820.710.00
TAPDI-19			5	1	11	12				LINE AMPLIFIER, CH19	J11		1.820.715.00
			5	1	12	14B				CONTROLLER INTERNAL NRS CH19	J12		1.820.815.00
			5	1	13	10				REPRODUCE AMPLIFIER, CH19	J13		1.820.710.00
TAPDI-20			5	1	16	12				LINE AMPLIFIER, CH20	J16		1.820.715.00
			5	1	17	14B				CONTROLLER INTERNAL NRS CH20	J17		1.820.815.00
			5	1	18	10				REPRODUCE AMPLIFIER, CH20	J18		1.820.710.00
TAPDI-21			5	2	1	12				LINE AMPLIFIER, CH21	J01		1.820.715.00
			5	2	2	14B				CONTROLLER INTERNAL NRS CH21	J02		1.820.815.00
			5	2	3	10				REPRODUCE AMPLIFIER, CH21	J03		1.820.710.00

* WILLI STUDER AG * S I G N A L W I R E L I S T * 89/07/20 * 9:25 * P A G E 224 *
* TAPE TRANSPORT & AUDIO MCH * * 89/04/19 - 00 *

SIGNAL NAME	COLOR	MI	ASY	GRP	ELM	PNT	S	LV	TYPE	DESCRIPTION OF ELEMENT		REMARK	ELEMENT NR.
TAPDI-22			5	2	6	12				LINE AMPLIFIER, CH22	J06		1.820.715.00
			5	2	7	14B				CONTROLLER INTERNAL NRS CH22	J07		1.820.815.00
			5	2	8	10				REPRODUCE AMPLIFIER, CH22	J08		1.820.710.00
TAPDI-23			5	2	11	12				LINE AMPLIFIER, CH23	J11		1.820.715.00
			5	2	12	14B				CONTROLLER INTERNAL NRS CH23	J12		1.820.815.00
			5	2	13	10				REPRODUCE AMPLIFIER, CH23	J13		1.820.710.00
TAPDI-24			5	2	16	12				LINE AMPLIFIER, CH24	J16		1.820.715.00
			5	2	17	14B				CONTROLLER INTERNAL NRS CH24	J17		1.820.815.00
			5	2	18	10				REPRODUCE AMPLIFIER, CH24	J18		1.820.710.00
TAPLI-01			3	1	3	1				REPRODUCE AMPLIFIER, CH 1	J03		1.820.710.00
TAPLI-02			3	1	8	1				REPRODUCE AMPLIFIER, CH 2	J08		1.820.710.00
TAPLI-03			3	1	13	1				REPRODUCE AMPLIFIER, CH 3	J13		1.820.710.00
TAPLI-04			3	1	18	1				REPRODUCE AMPLIFIER, CH 4	J18		1.820.710.00
TAPLI-05			3	2	3	1				REPRODUCE AMPLIFIER, CH 5	J03		1.820.710.00
TAPLI-06			3	2	8	1				REPRODUCE AMPLIFIER, CH 6	J08		1.820.710.00
TAPLI-07			3	2	13	1				REPRODUCE AMPLIFIER, CH 7	J13		1.820.710.00
TAPLI-08			3	2	18	1				REPRODUCE AMPLIFIER, CH 8	J18		1.820.710.00
TAPLI-09			4	1	3	1				REPRODUCE AMPLIFIER, CH 9	J03		1.820.710.00
TAPLI-10			4	1	8	1				REPRODUCE AMPLIFIER, CH10	J08		1.820.710.00
TAPLI-11			4	1	13	1				REPRODUCE AMPLIFIER, CH11	J13		1.820.710.00
TAPLI-12			4	1	18	1				REPRODUCE AMPLIFIER, CH12	J18		1.820.710.00
TAPLI-13			4	2	3	1				REPRODUCE AMPLIFIER, CH13	J03		1.820.710.00
TAPLI-14			4	2	8	1				REPRODUCE AMPLIFIER, CH14	J08		1.820.710.00
TAPLI-15			4	2	13	1				REPRODUCE AMPLIFIER, CH15	J13		1.820.710.00
TAPLI-16			4	2	18	1				REPRODUCE AMPLIFIER, CH16	J18		1.820.710.00
TAPLI-17			5	1	3	1				REPRODUCE AMPLIFIER, CH17	J03		1.820.710.00
TAPLI-18			5	1	8	1				REPRODUCE AMPLIFIER, CH18	J08		1.820.710.00
TAPLI-19			5	1	13	1				REPRODUCE AMPLIFIER, CH19	J13		1.820.710.00
TAPLI-20			5	1	18	1				REPRODUCE AMPLIFIER, CH20	J18		1.820.710.00
TAPLI-21			5	2	3	1				REPRODUCE AMPLIFIER, CH21	J03		1.820.710.00
TAPLI-22			5	2	8	1				REPRODUCE AMPLIFIER, CH22	J08		1.820.710.00

* WILLI STUDER AG * S I G N A L W I R E L I S T * 89/07/20 * 9:25 * P A G E 225 *
* * TAPE TRANSPORT & AUDIO MCH * * 89/04/19 - 00 *

SIGNAL NAME	COLOR	MI	ASY	GRP	ELM	PNT	S	LV	TYPE	DESCRIPTION OF ELEMENT		REMARK	ELEMENT NR.
TAPLI-23			5	2	13	1				REPRODUCE AMPLIFIER, CH23	J13		1.820.710.00
TAPLI-24			5	2	18	1				REPRODUCE AMPLIFIER, CH24	J18		1.820.710.00
TAPMS-01			3	1	1	11				LINE AMPLIFIER, CH 1	J01		1.820.715.00
TAPMS-02			3	1	6	11				LINE AMPLIFIER, CH 2	J06		1.820.715.00
TAPMS-03			3	1	11	11				LINE AMPLIFIER, CH 3	J11		1.820.715.00
TAPMS-04			3	1	16	11				LINE AMPLIFIER, CH 4	J16		1.820.715.00
TAPMS-05			3	2	1	11				LINE AMPLIFIER, CH 5	J01		1.820.715.00
TAPMS-06			3	2	6	11				LINE AMPLIFIER, CH 6	J06		1.820.715.00
TAPMS-07			3	2	11	11				LINE AMPLIFIER, CH 7	J11		1.820.715.00
TAPMS-08			3	2	16	11				LINE AMPLIFIER, CH 8	J16		1.820.715.00
TAPMS-09			4	1	1	11				LINE AMPLIFIER, CH 9	J01		1.820.715.00
TAPMS-10			4	1	6	11				LINE AMPLIFIER, CH10	J06		1.820.715.00
TAPMS-11			4	1	11	11				LINE AMPLIFIER, CH11	J11		1.820.715.00
TAPMS-12			4	1	16	11				LINE AMPLIFIER, CH12	J16		1.820.715.00
TAPMS-13			4	2	1	11				LINE AMPLIFIER, CH13	J01		1.820.715.00
TAPMS-14			4	2	6	11				LINE AMPLIFIER, CH14	J06		1.820.715.00
TAPMS-15			4	2	11	11				LINE AMPLIFIER, CH15	J11		1.820.715.00
TAPMS-16			4	2	16	11				LINE AMPLIFIER, CH16	J16		1.820.715.00
TAPMS-17			5	1	1	11				LINE AMPLIFIER, CH17	J01		1.820.715.00
TAPMS-18			5	1	6	11				LINE AMPLIFIER, CH18	J06		1.820.715.00
TAPMS-19			5	1	11	11				LINE AMPLIFIER, CH19	J11		1.820.715.00
TAPMS-20			5	1	16	11				LINE AMPLIFIER, CH20	J16		1.820.715.00
TAPMS-21			5	2	1	11				LINE AMPLIFIER, CH21	J01		1.820.715.00
TAPMS-22			5	2	6	11				LINE AMPLIFIER, CH22	J06		1.820.715.00
TAPMS-23			5	2	11	11				LINE AMPLIFIER, CH23	J11		1.820.715.00
TAPMS-24			5	2	16	11				LINE AMPLIFIER, CH24	J16		1.820.715.00
TC-ADR0			1	20	34	23				INT. SYNCHRONIZER			
			1	20	41	31				CAPSTAN CONTROL UNIT	J02		1.820.764.00
			1	20	42	24A				CAPSTAN INTERFACE	J03		1.820.727.00

* WILLI STUDER AG * S I G N A L W I R E L I S T * 89/07/20 * 9:25 * P A G E 226 *
* * TAPE TRANSPORT & AUDIO MCH * * 89/04/19 - 00 *

SIGNAL NAME	COLOR	MI	ASY	GRP	ELM	PNT	S	LV	TYPE	DESCRIPTION OF ELEMENT		REMARK	ELEMENT NR.
TC-ADR1			1	20	34	21				INT. SYNCHRONIZER			
			1	20	41	30				CAPSTAN CONTROL UNIT	J02		1.820.764.00
			1	20	42	23A				CAPSTAN INTERFACE	J03		1.820.727.00
TC-ADR2			1	20	34	19				INT. SYNCHRONIZER			
			1	20	41	29				CAPSTAN CONTROL UNIT	J02		1.820.764.00
			1	20	42	22A				CAPSTAN INTERFACE	J03		1.820.727.00
TC-CAPDC			1	20	3	14				CAPSTAN M. DRIVE AMPLIFIER	P03		
			1	20	41	4				CAPSTAN CONTROL UNIT	J02		1.820.764.00
			1	39	1	14				FROM GRP20, ELM03 (BASIS B. TD)	P01		
TC-CDIRI			1	20	41	6				CAPSTAN CONTROL UNIT	J02		1.820.764.00
			1	20	42	1A				CAPSTAN INTERFACE	J03		1.820.727.00
TC-CPREF			1	20	3	13				CAPSTAN M. DRIVE AMPLIFIER	P03		
			1	39	1	13				FROM GRP20, ELM03 (BASIS B. TD)	P01		
TC-DATA0			1	20	34	39				INT. SYNCHRONIZER			
			1	20	41	39				CAPSTAN CONTROL UNIT	J02		1.820.764.00
			1	20	42	32A				CAPSTAN INTERFACE	J03		1.820.727.00
TC-DATA1			1	20	34	37				INT. SYNCHRONIZER			
			1	20	41	38				CAPSTAN CONTROL UNIT	J02		1.820.764.00
			1	20	42	31A				CAPSTAN INTERFACE	J03		1.820.727.00
TC-DATA2			1	20	34	35				INT. SYNCHRONIZER			
			1	20	41	37				CAPSTAN CONTROL UNIT	J02		1.820.764.00
			1	20	42	30A				CAPSTAN INTERFACE	J03		1.820.727.00
TC-DATA3			1	20	34	33				INT. SYNCHRONIZER			
			1	20	41	36				CAPSTAN CONTROL UNIT	J02		1.820.764.00
			1	20	42	29A				CAPSTAN INTERFACE	J03		1.820.727.00
TC-DATA4			1	20	34	31				INT. SYNCHRONIZER			
			1	20	41	35				CAPSTAN CONTROL UNIT	J02		1.820.764.00
			1	20	42	28A				CAPSTAN INTERFACE	J03		1.820.727.00
TC-DATA5			1	20	34	29				INT. SYNCHRONIZER			
			1	20	41	34				CAPSTAN CONTROL UNIT	J02		1.820.764.00
			1	20	42	27A				CAPSTAN INTERFACE	J03		1.820.727.00
TC-DATA6			1	20	34	27				INT. SYNCHRONIZER			
			1	20	41	33				CAPSTAN CONTROL UNIT	J02		1.820.764.00
			1	20	42	26A				CAPSTAN INTERFACE	J03		1.820.727.00
TC-DATA7			1	20	34	25				INT. SYNCHRONIZER			
			1	20	41	32				CAPSTAN CONTROL UNIT	J02		1.820.764.00
			1	20	42	25A				CAPSTAN INTERFACE	J03		1.820.727.00
TC-ENB			1	20	34	17				INT. SYNCHRONIZER			
			1	20	41	28				CAPSTAN CONTROL UNIT	J02		1.820.764.00
			1	20	42	21A				CAPSTAN INTERFACE	J03		1.820.727.00

SIGNAL NAME	COLOR	MI	ASY	GRP	ELM	PNT	S	LV	TYPE	DESCRIPTION OF ELEMENT		REMARK	ELEMENT NR.
TC-ENBG			1	20	34	7				INT. SYNCHRONIZER			
			1	20	41	11				CAPSTAN CONTROL UNIT	J02		1.820.764.00
			1	20	42	8B				CAPSTAN INTERFACE	J03		1.820.727.00
TC-EREF			1	20	41	14				CAPSTAN CONTROL UNIT	J02		1.820.764.00
			1	20	42	10B				CAPSTAN INTERFACE	J03		1.820.727.00
TC-EVEN			1	20	30	7				SSDA INT. SYNCHRONIZER	P20		
			1	20	41	12				CAPSTAN CONTROL UNIT	J02		1.820.764.00
			1	20	42	4A				CAPSTAN INTERFACE	J03		1.820.727.00
			1	20	51	19B				MASTER TO AUDIO INTERFACE	J12		1.820.756.00
TC-EVENT			1	20	32	8				BASIS BOARD AUDIO CONT. ELM15	P24		
			1	20	51	6B				MASTER TO AUDIO INTERFACE	J12		1.820.756.00
			1	21	15	8				TAPE DECK BASIS BOARD, ELM32	P08		
			1	21	21	2				MPU AUDIO CONTROL MCH	J06		1.820.782.00
			1	22	15	8				TAPE DECK BASIS BOARD, ELM32	P08		
			1	22	21	2				MPU AUDIO CONTROL MCH	J06		1.820.782.00
TC-HALL1			1	38	1	4			F	FROM GRP39, ELM02	J01		
			1	39	2	4			M	TO GRP38, ELM01 (CAPSTAN MOTOR)	P02		
TC-HALL2			1	38	1	7			F	FROM GRP39, ELM02	J01		
			1	39	2	7			M	TO GRP38, ELM01 (CAPSTAN MOTOR)	P02		
TC-HALL3			1	38	1	10			F	FROM GRP39, ELM02	J01		
			1	39	2	10			M	TO GRP38, ELM01 (CAPSTAN MOTOR)	P02		
TC-INEX			1	20	41	9				CAPSTAN CONTROL UNIT	J02		1.820.764.00
			1	20	42	12A				CAPSTAN INTERFACE	J03		1.820.727.00
TC-IRQ			1	20	34	5				INT. SYNCHRONIZER			
			1	20	41	13				CAPSTAN CONTROL UNIT	J02		1.820.764.00
			1	20	42	9A				CAPSTAN INTERFACE	J03		1.820.727.00
TC-REF			1	20	41	8				CAPSTAN CONTROL UNIT	J02		1.820.764.00
			1	20	42	11A				CAPSTAN INTERFACE	J03		1.820.727.00
TC-REFP			1	20	41	3				CAPSTAN CONTROL UNIT	J02		1.820.764.00
			1	20	42	4B				CAPSTAN INTERFACE	J03		1.820.727.00
TC-RESMP			1	20	34	9				INT. SYNCHRONIZER			
			1	20	41	10				CAPSTAN CONTROL UNIT	J02		1.820.764.00
			1	20	42	8A				CAPSTAN INTERFACE	J03		1.820.727.00
TC-RW			1	20	34	15				INT. SYNCHRONIZER			
			1	20	41	27				CAPSTAN CONTROL UNIT	J02		1.820.764.00
			1	20	42	20A				CAPSTAN INTERFACE	J03		1.820.727.00
TC-SL1			1	20	41	24				CAPSTAN CONTROL UNIT	J02		1.820.764.00
			1	20	42	13A				CAPSTAN INTERFACE	J03		1.820.727.00
TC-SL2			1	20	41	23				CAPSTAN CONTROL UNIT	J02		1.820.764.00
			1	20	42	14A				CAPSTAN INTERFACE	J03		1.820.727.00

SIGNAL NAME	COLOR	MI	ASY	GRP	ELM	PNT	S	LV	TYPE	DESCRIPTION OF ELEMENT		REMARK	ELEMENT NR.
TC-SL3			1	20	34	1				INT. SYNCHRONIZER			
			1	20	41	16				CAPSTAN CONTROL UNIT	J02		1.820.764.00
TC-SL4			1	20	34	3				INT. SYNCHRONIZER			
			1	20	41	15				CAPSTAN CONTROL UNIT	J02		1.820.764.00
TC-TCDIR			1	20	4	8				PAR. CONT. INT. SYNCHRONIZER	P04		
			1	20	16	18				PARALLEL REMOTE INTERFACE	P16		
			1	20	42	6A				CAPSTAN INTERFACE	J03		1.820.727.00
			1	20	42	6B				CAPSTAN INTERFACE	J03		1.820.727.00
			1	27	2	18				FROM GRP20, ELM16 (BASIS BOARD)	P02		
TC-TCMV			1	20	4	10				PAR. CONT. INT. SYNCHRONIZER	P04		
			1	20	16	17				PARALLEL REMOTE INTERFACE	P16		
			1	20	42	5A				CAPSTAN INTERFACE	J03		1.820.727.00
			1	20	42	5B				CAPSTAN INTERFACE	J03		1.820.727.00
			1	27	2	17				FROM GRP20, ELM16 (BASIS BOARD)	P02		
TC-TCMVI			1	20	41	5				CAPSTAN CONTROL UNIT	J02		1.820.764.00
			1	20	42	2A				CAPSTAN INTERFACE	J03		1.820.727.00
TD-ADR0			1	20	42	24B				CAPSTAN INTERFACE	J03		1.820.727.00
			1	20	43	24B				TAPE DECK PERIPHERY CONTR.	J04		1.820.762.00
			1	20	44	31				TAPE DECK COUNTER / TIMER	J05		1.820.761.00
			1	20	45	31				SPOOLING MOTOR CONTROLLER	J06		1.820.822.00
			1	20	46	31				MP-UNIT TD CONTROL MCH	J07		1.820.781.00
			1	20	47	31				TAPE DECK SERIAL INTERFACE	J08		1.820.763.00
TD-ADR1			1	20	42	23B				CAPSTAN INTERFACE	J03		1.820.727.00
			1	20	43	23B				TAPE DECK PERIPHERY CONTR.	J04		1.820.762.00
			1	20	44	30				TAPE DECK COUNTER / TIMER	J05		1.820.761.00
			1	20	45	30				SPOOLING MOTOR CONTROLLER	J06		1.820.822.00
			1	20	46	30				MP-UNIT TD CONTROL MCH	J07		1.820.781.00
			1	20	47	30				TAPE DECK SERIAL INTERFACE	J08		1.820.763.00
TD-ADR2			1	20	43	22B				TAPE DECK PERIPHERY CONTR.	J04		1.820.762.00
			1	20	44	29				TAPE DECK COUNTER / TIMER	J05		1.820.761.00
			1	20	45	29				SPOOLING MOTOR CONTROLLER	J06		1.820.822.00
			1	20	46	29				MP-UNIT TD CONTROL MCH	J07		1.820.781.00
			1	20	47	29				TAPE DECK SERIAL INTERFACE	J08		1.820.763.00
TD-ADR3			1	20	44	6				TAPE DECK COUNTER / TIMER	J05		1.820.761.00
			1	20	46	6				MP-UNIT TD CONTROL MCH	J07		1.820.781.00
			1	20	47	24				TAPE DECK SERIAL INTERFACE	J08		1.820.763.00
TD-BUSSW			1	20	46	8				MP-UNIT TD CONTROL MCH	J07		1.820.781.00
TD-CAPSY			1	20	4	13				PAR. CONT. INT. SYNCHRONIZER	P04		
			1	20	41	7				CAPSTAN CONTROL UNIT	J02		1.820.764.00
			1	20	48	22A				MASTER SERIAL INTERFACE	J09		1.820.753.00
TD-CRES			1	20	41	26				CAPSTAN CONTROL UNIT	J02		1.820.764.00
			1	20	43	6A				TAPE DECK PERIPHERY CONTR.	J04		1.820.762.00

```
*    WILLI STUDER AG    *    S I G N A L    W I R E    L I S T              * 89/07/20  *   9:25  *  P A G E 229   *
*                          * TAPE TRANSPORT & AUDIO MCH *                    * 89/04/19 - 00                        *
```

SIGNAL NAME	COLOR	MI	ASY	GRP	ELM	PNT	S	LV	TYPE	DESCRIPTION OF ELEMENT		REMARK	ELEMENT NR.
TD-C307K			1	20	32	16				BASIS BOARD AUDIO CONT. ELM15	P24		
			1	20	46	22				MP-UNIT TD CONTROL MCH	J07		1.820.781.00
			1	21	15	16				TAPE DECK BASIS BOARD, ELM32	P08		
			1	21	24	32A				BUS DRIVER MCH	J09		1.820.723.00
			1	22	15	16				TAPE DECK BASIS BOARD, ELM32	P08		
			1	22	24	32A				BUS DRIVER MCH	J09		1.820.723.00
TD-C614K			1	20	46	7				MP-UNIT TD CONTROL MCH	J07		1.820.781.00
TD-C76K			1	20	3	15				CAPSTAN M. DRIVE AMPLIFIER	P03		
			1	20	40	17				SPOOLING MOTOR DRIVER	J01		1.820.759.00
			1	20	46	16				MP-UNIT TD CONTROL MCH	J07		1.820.781.00
	9		1	20	62	15			U	WIRE FIELD			
	9		1	20	70	4			F	FROM GRP35, ELM59	J13		
			1	31	1	7				FROM DISTRIBUTION BOARD (ELM20)	P01		
			1	32	1	7				FROM DISTRIBUTION BOARD (ELM21)	P01		
	9		1	35	14	1			U	WIRE FIELD			
			1	35	14	2				WIRE FIELD			
			1	35	14	3				WIRE FIELD			
			1	35	14	4				WIRE FIELD			
			1	35	14	5				WIRE FIELD			
			1	35	14	6				WIRE FIELD			
			1	35	20	7				TO GRP31, ELM01	P01		
			1	35	21	7				TO GRP32, ELM01	P02		
	9		1	35	59	4			M	TO GRP20, ELM70	P10		
			1	39	1	15				FROM GRP20, ELM03 (BASIS B. TD)	P01		
TD-DATA0			1	20	42	32B				CAPSTAN INTERFACE	J03		1.820.727.00
			1	20	43	32B				TAPE DECK PERIPHERY CONTR.	J04		1.820.762.00
			1	20	44	39				TAPE DECK COUNTER / TIMER	J05		1.820.761.00
			1	20	45	39				SPOOLING MOTOR CONTROLLER	J06		1.820.822.00
			1	20	46	39				MP-UNIT TD CONTROL MCH	J07		1.820.781.00
			1	20	47	39				TAPE DECK SERIAL INTERFACE	J08		1.820.763.00
TD-DATA1			1	20	42	31B				CAPSTAN INTERFACE	J03		1.820.727.00
			1	20	43	31B				TAPE DECK PERIPHERY CONTR.	J04		1.820.762.00
			1	20	44	38				TAPE DECK COUNTER / TIMER	J05		1.820.761.00
			1	20	45	38				SPOOLING MOTOR CONTROLLER	J06		1.820.822.00
			1	20	46	38				MP-UNIT TD CONTROL MCH	J07		1.820.781.00
			1	20	47	38				TAPE DECK SERIAL INTERFACE	J08		1.820.763.00
TD-DATA2			1	20	42	30B				CAPSTAN INTERFACE	J03		1.820.727.00
			1	20	43	30B				TAPE DECK PERIPHERY CONTR.	J04		1.820.762.00
			1	20	44	37				TAPE DECK COUNTER / TIMER	J05		1.820.761.00
			1	20	45	37				SPOOLING MOTOR CONTROLLER	J06		1.820.822.00
			1	20	46	37				MP-UNIT TD CONTROL MCH	J07		1.820.781.00
			1	20	47	37				TAPE DECK SERIAL INTERFACE	J08		1.820.763.00
TD-DATA3			1	20	42	29B				CAPSTAN INTERFACE	J03		1.820.727.00
			1	20	43	29B				TAPE DECK PERIPHERY CONTR.	J04		1.820.762.00
			1	20	44	36				TAPE DECK COUNTER / TIMER	J05		1.820.761.00
			1	20	45	36				SPOOLING MOTOR CONTROLLER	J06		1.820.822.00
			1	20	46	36				MP-UNIT TD CONTROL MCH	J07		1.820.781.00
			1	20	47	36				TAPE DECK SERIAL INTERFACE	J08		1.820.763.00

```
*    WILLI STUDER AG    *    S I G N A L    W I R E    L I S T              * 89/07/20  *   9:25  *  P A G E 230   *
*                          * TAPE TRANSPORT & AUDIO MCH *                    * 89/04/19 - 00                        *
```

SIGNAL NAME	COLOR	MI	ASY	GRP	ELM	PNT	S	LV	TYPE	DESCRIPTION OF ELEMENT		REMARK	ELEMENT NR.
TD-DATA4			1	20	42	28B				CAPSTAN INTERFACE	J03		1.820.727.00
			1	20	43	28B				TAPE DECK PERIPHERY CONTR.	J04		1.820.762.00
			1	20	44	35				TAPE DECK COUNTER / TIMER	J05		1.820.761.00
			1	20	45	35				SPOOLING MOTOR CONTROLLER	J06		1.820.822.00
			1	20	46	35				MP-UNIT TD CONTROL MCH	J07		1.820.781.00
			1	20	47	35				TAPE DECK SERIAL INTERFACE	J08		1.820.763.00
TD-DATA5			1	20	42	27B				CAPSTAN INTERFACE	J03		1.820.727.00
			1	20	43	27B				TAPE DECK PERIPHERY CONTR.	J04		1.820.762.00
			1	20	44	34				TAPE DECK COUNTER / TIMER	J05		1.820.761.00
			1	20	45	34				SPOOLING MOTOR CONTROLLER	J06		1.820.822.00
			1	20	46	34				MP-UNIT TD CONTROL MCH	J07		1.820.781.00
			1	20	47	34				TAPE DECK SERIAL INTERFACE	J08		1.820.763.00
TD-DATA6			1	20	42	26B				CAPSTAN INTERFACE	J03		1.820.727.00
			1	20	43	26B				TAPE DECK PERIPHERY CONTR.	J04		1.820.762.00
			1	20	44	33				TAPE DECK COUNTER / TIMER	J05		1.820.761.00
			1	20	45	33				SPOOLING MOTOR CONTROLLER	J06		1.820.822.00
			1	20	46	33				MP-UNIT TD CONTROL MCH	J07		1.820.781.00
			1	20	47	33				TAPE DECK SERIAL INTERFACE	J08		1.820.763.00
TD-DATA7			1	20	42	25B				CAPSTAN INTERFACE	J03		1.820.727.00
			1	20	43	25B				TAPE DECK PERIPHERY CONTR.	J04		1.820.762.00
			1	20	44	32				TAPE DECK COUNTER / TIMER	J05		1.820.761.00
			1	20	45	32				SPOOLING MOTOR CONTROLLER	J06		1.820.822.00
			1	20	46	32				MP-UNIT TD CONTROL MCH	J07		1.820.781.00
			1	20	47	32				TAPE DECK SERIAL INTERFACE	J08		1.820.763.00
TD-DRENB			1	20	46	12				MP-UNIT TD CONTROL MCH	J07		1.820.781.00
TD-ENB			1	20	42	21B				CAPSTAN INTERFACE	J03		1.820.727.00
			1	20	43	21B				TAPE DECK PERIPHERY CONTR.	J04		1.820.762.00
			1	20	44	28				TAPE DECK COUNTER / TIMER	J05		1.820.761.00
			1	20	45	28				SPOOLING MOTOR CONTROLLER	J06		1.820.822.00
			1	20	46	28				MP-UNIT TD CONTROL MCH	J07		1.820.781.00
			1	20	47	28				TAPE DECK SERIAL INTERFACE	J08		1.820.763.00
TD-EVENT			1	20	32	6				BASIS BOARD AUDIO CONT. ELM15	P24		
			1	20	43	5A				TAPE DECK PERIPHERY CONTR.	J04		1.820.762.00
			1	20	49	1				MP-UNIT MASTER MCH	J10		1.820.784.00
			1	21	15	6				TAPE DECK BASIS BOARD, ELM32	P08		
			1	21	21	1				MPU AUDIO CONTROL MCH	J06		1.820.782.00
			1	22	15	6				TAPE DECK BASIS BOARD, ELM32	P08		
			1	22	21	1				MPU AUDIO CONTROL MCH	J06		1.820.782.00
TD-HEACT			1	20	32	2				BASIS BOARD AUDIO CONT. ELM15	P24		
			1	20	43	9B				TAPE DECK PERIPHERY CONTR.	J04		1.820.762.00
			1	20	48	20A				MASTER SERIAL INTERFACE	J09		1.820.753.00
			1	21	15	2				TAPE DECK BASIS BOARD, ELM32	P08		
			1	21	20	1				COMMUNICATIONS CONTROLLER	J05		1.820.718.00
			1	22	15	2				TAPE DECK BASIS BOARD, ELM32	P08		
			1	22	20	1				COMMUNICATIONS CONTROLLER	J05		1.820.718.00
TD-ICRE1			1	20	44	9				TAPE DECK COUNTER / TIMER	J05		1.820.761.00
TD-ICRE2			1	20	44	11				TAPE DECK COUNTER / TIMER	J05		1.820.761.00

SIGNAL NAME	COLOR	MI	ASY	GRP	ELM	PNT	S	LV	TYPE	DESCRIPTION OF ELEMENT		REMARK	ELEMENT NR.
TD-ICRE3			1	20	44	16				TAPE DECK COUNTER / TIMER	J05		1.820.761.00
TD-ICRE4			1	20	44	17				TAPE DECK COUNTER / TIMER	J05		1.820.761.00
TD-ICRE5			1	20	44	23				TAPE DECK COUNTER / TIMER	J05		1.820.761.00
TD-IRQ			1	20	42	13B				CAPSTAN INTERFACE	J03		1.820.727.00
			1	20	44	13				TAPE DECK COUNTER / TIMER	J05		1.820.761.00
			1	20	46	13				MP-UNIT TD CONTROL MCH	J07		1.820.781.00
			1	20	47	12				TAPE DECK SERIAL INTERFACE	J08		1.820.763.00
TD-MOVE			1	20	32	10				BASIS BOARD AUDIO CONT. ELM15	P24		
			1	20	43	4A				TAPE DECK PERIPHERY CONTR.	J04		1.820.762.00
			1	20	48	21A				MASTER SERIAL INTERFACE	J09		1.820.753.00
			1	21	15	10				TAPE DECK BASIS BOARD, ELM32	P08		
			1	21	20	3				COMMUNICATIONS CONTROLLER	J05		1.820.718.00
			1	22	15	10				TAPE DECK BASIS BOARD, ELM32	P08		
			1	22	20	3				COMMUNICATIONS CONTROLLER	J05		1.820.718.00
TD-MOVE1			1	20	11	9				MOVE SENSOR	P11		
			1	20	44	7				TAPE DECK COUNTER / TIMER	J05		1.820.761.00
			1	45	1	9				FROM GRP20, ELM11	P01		
			1	60	2	9				FROM GR. 20 ELM 11	P02		
			1	60	6	9				TO MOVE SENSOR	P06		
TD-MOVE2			1	20	11	8				MOVE SENSOR	P11		
			1	20	44	8				TAPE DECK COUNTER / TIMER	J05		1.820.761.00
			1	45	1	8				FROM GRP20, ELM11	P01		
			1	60	2	8				FROM GR. 20 ELM 11	P02		
			1	60	6	8				TO MOVE SENSOR	P06		
TD-MVCLK			1	20	4	15				PAR. CONT. INT. SYNCHRONIZER	P04		
			1	20	16	23				PARALLEL REMOTE INTERFACE	P16		
			1	20	44	12				TAPE DECK COUNTER / TIMER	J05		1.820.761.00
			1	20	48	25B				MASTER SERIAL INTERFACE	J09		1.820.753.00
			1	27	2	23				FROM GRP20, ELM16 (BASIS BOARD)	P02		
TD-MVDIR			1	20	4	14				PAR. CONT. INT. SYNCHRONIZER	P04		
			1	20	16	24				PARALLEL REMOTE INTERFACE	P16		
			1	20	32	4				BASIS BOARD AUDIO CONT. ELM15	P24		
			1	20	44	14				TAPE DECK COUNTER / TIMER	J05		1.820.761.00
			1	20	48	25A				MASTER SERIAL INTERFACE	J09		1.820.753.00
			1	21	15	4				TAPE DECK BASIS BOARD, ELM32	P08		
			1	21	20	2				COMMUNICATIONS CONTROLLER	J05		1.820.718.00
			1	22	15	4				TAPE DECK BASIS BOARD, ELM32	P08		
			1	22	20	2				COMMUNICATIONS CONTROLLER	J05		1.820.718.00
			1	27	2	24				FROM GRP20, ELM16 (BASIS BOARD)	P02		
TD-NMI			1	20	46	9				MP-UNIT TD CONTROL MCH	J07		1.820.781.00
TD-PENBL			1	20	40	23				SPOOLING MOTOR DRIVER	J01		1.820.759.00
			1	20	43	20A				TAPE DECK PERIPHERY CONTR.	J04		1.820.762.00
TD-PENBR			1	20	40	15				SPOOLING MOTOR DRIVER	J01		1.820.759.00
			1	20	43	21A				TAPE DECK PERIPHERY CONTR.	J04		1.820.762.00

SIGNAL NAME	COLOR	MI	ASY	GRP	ELM	PNT	S	LV	TYPE	DESCRIPTION OF ELEMENT		REMARK	ELEMENT NR.
TD-PWENB			1	20	43	10A				TAPE DECK PERIPHERY CONTR.	J04		1.820.762.00
TD-PWEN1			1	31	1	8				FROM DISTRIBUTION BOARD (ELM20)	P01		
			1	35	12	1				WIRE FIELD			
			1	35	12	2				WIRE FIELD			
			1	35	20	8				TO GRP31, ELM01	P01		
TD-PWEN2			1	32	1	8				FROM DISTRIBUTION BOARD (ELM21)	P01		
			1	35	13	1				WIRE FIELD			
			1	35	13	2				WIRE FIELD			
			1	35	21	8				TO GRP32, ELM01	P02		
TD-RALC1			1	20	7	14				TAPE LIFT MOTOR, LEFT	P07		
			1	20	43	1B				TAPE DECK PERIPHERY CONTR.	J04		1.820.762.00
			1	46	1	14				FROM GRP20, ELM07	P01		
TD-RALC2			1	20	7	12				TAPE LIFT MOTOR, LEFT	P07		
			1	20	43	2B				TAPE DECK PERIPHERY CONTR.	J04		1.820.762.00
			1	46	1	12				FROM GRP20, ELM07	P01		
TD-RALEN			1	20	7	15				TAPE LIFT MOTOR, LEFT	P07		
			1	20	43	1A				TAPE DECK PERIPHERY CONTR.	J04		1.820.762.00
			1	46	1	15				FROM GRP20, ELM07	P01		
TD-RALP1			1	20	7	11				TAPE LIFT MOTOR, LEFT	P07		
			1	20	43	3A				TAPE DECK PERIPHERY CONTR.	J04		1.820.762.00
			1	46	1	11				FROM GRP20, ELM07	P01		
TD-RALP2			1	20	7	13				TAPE LIFT MOTOR, LEFT	P07		
			1	20	43	2A				TAPE DECK PERIPHERY CONTR.	J04		1.820.762.00
			1	46	1	13				FROM GRP20, ELM07	P01		
TD-RARC1			1	20	8	14				TAPE LIFT MOTOR, RIGHT	P08		
			1	20	43	6B				TAPE DECK PERIPHERY CONTR.	J04		1.820.762.00
			1	47	1	14				FROM GRP20, ELM08 (BASIS B. TD)	P01		
			1	60	1	14				FROM GR. 20 ELM 08	P01		
			1	60	5	14				TO TAPE LIFT MOTOR, RIGHT	P05		
TD-RARC2			1	20	8	12				TAPE LIFT MOTOR, RIGHT	P08		
			1	20	43	7B				TAPE DECK PERIPHERY CONTR.	J04		1.820.762.00
			1	47	1	12				FROM GRP20, ELM08 (BASIS B. TD)	P01		
			1	60	1	12				FROM GR. 20 ELM 08	P01		
			1	60	5	12				TO TAPE LIFT MOTOR, RIGHT	P05		
TD-RAREN			1	20	8	15				TAPE LIFT MOTOR, RIGHT	P08		
			1	20	43	5B				TAPE DECK PERIPHERY CONTR.	J04		1.820.762.00
			1	47	1	15				FROM GRP20, ELM08 (BASIS B. TD)	P01		
			1	60	1	15				FROM GR. 20 ELM 08	P01		
			1	60	5	15				TO TAPE LIFT MOTOR, RIGHT	P05		
TD-RARP1			1	20	8	11				TAPE LIFT MOTOR, RIGHT	P08		
			1	20	43	3B				TAPE DECK PERIPHERY CONTR.	J04		1.820.762.00
			1	47	1	11				FROM GRP20, ELM08 (BASIS B. TD)	P01		
			1	60	1	11				FROM GR. 20 ELM 08	P01		
			1	60	5	11				TO TAPE LIFT MOTOR, RIGHT	P05		

WILLI STUDER AG * S I G N A L W I R E L I S T * 89/07/20 * 9:25 * P A G E 233

* TAPE TRANSPORT & AUDIO MCH * * 89/04/19 - 00

SIGNAL NAME	COLOR	MI	ASY	GRP	ELM	PNT	S	LV	TYPE	DESCRIPTION OF ELEMENT		REMARK	ELEMENT NR.
TD-RARP2			1	20	8	13				TAPE LIFT MOTOR, RIGHT	P08		
			1	20	43	4B				TAPE DECK PERIPHERY CONTR.	J04		1.820.762.00
			1	47	1	13				FROM GRP20, ELM08 (BASIS B. TD)	P01		
			1	60	1	13				FROM GR. 20 ELM 08	P01		
			1	60	5	13				TO TAPE LIFT MOTOR, RIGHT	P05		
TD-RES			1	20	42	19D				CAPSTAN INTERFACE	J03		1.820.727.00
			1	20	43	19B				TAPE DECK PERIPHERY CONTR.	J04		1.820.762.00
			1	20	44	26				TAPE DECK COUNTER / TIMER	J05		1.820.761.00
			1	20	45	26				SPOOLING MOTOR CONTROLLER	J06		1.820.822.00
			1	20	47	26				TAPE DECK SERIAL INTERFACE	J08		1.820.763.00
TD-RESET			1	20	46	26				MP-UNIT TD CONTROL MCH	J07		1.820.781.00
			1	20	47	23				TAPE DECK SERIAL INTERFACE	J08		1.820.763.00
TD-RESMP			1	20	46	5				MP-UNIT TD CONTROL MCH	J07		1.820.781.00
			1	20	47	11				TAPE DECK SERIAL INTERFACE	J08		1.820.763.00
TD-RW			1	20	42	20B				CAPSTAN INTERFACE	J03		1.820.727.00
			1	20	43	20B				TAPE DECK PERIPHERY CONTR.	J04		1.820.762.00
			1	20	44	27				TAPE DECK COUNTER / TIMER	J05		1.820.761.00
			1	20	45	27				SPOOLING MOTOR CONTROLLER	J06		1.820.822.00
			1	20	46	27				MP-UNIT TD CONTROL MCH	J07		1.820.781.00
			1	20	47	27				TAPE DECK SERIAL INTERFACE	J08		1.820.763.00
TD-RX			1	20	46	10				MP-UNIT TD CONTROL MCH	J07		1.820.781.00
TD-SHLD			1	20	6	8				OPTO + EXTENDED SENSORS	P06		
			1	20	43	8A				TAPE DECK PERIPHERY CONTR.	J04		1.820.762.00
			1	44	1	8				FROM GRP20, ELM06	P01		
TD-SL2			1	20	46	4				MP-UNIT TD CONTROL MCH	J07		1.820.781.00
TD-SL3			1	20	43	14B				TAPE DECK PERIPHERY CONTR.	J04		1.820.762.00
			1	20	46	3				MP-UNIT TD CONTROL MCH	J07		1.820.781.00
TD-SL4			1	20	45	23				SPOOLING MOTOR CONTROLLER	J06		1.820.822.00
			1	20	46	23				MP-UNIT TD CONTROL MCH	J07		1.820.781.00
TD-SL5			1	20	46	24				MP-UNIT TD CONTROL MCH	J07		1.820.781.00
			1	20	47	25				TAPE DECK SERIAL INTERFACE	J08		1.820.763.00
TD-SL6			1	20	44	25				TAPE DECK COUNTER / TIMER	J05		1.820.761.00
			1	20	46	25				MP-UNIT TD CONTROL MCH	J07		1.820.781.00
TD-SL7			1	20	42	14B				CAPSTAN INTERFACE	J03		1.820.727.00
			1	20	46	15				MP-UNIT TD CONTROL MCH	J07		1.820.781.00
TD-SR/AA			1	22	17	1					P14		
			1	22	22	15				GENERATOR UNIT MCH	J07		1.820.725.00
TD-SR/AB			1	22	18	1					P15		
			1	22	22	16				GENERATOR UNIT MCH	J07		1.820.725.00
TD-SR/AC			1	22	19	1					P16		
			1	22	22	17				GENERATOR UNIT MCH	J07		1.820.725.00

```
*    WILLI STUDER AG    *    S I G N A L    W I R E    L I S T              * 89/07/20  *   9:25  *  P A G E 234   *
*                            * TAPE TRANSPORT & AUDIO MCH *                  * 89/04/19 - 00                        *
```

SIGNAL NAME	COLOR	MI	ASY	GRP	ELM	PNT	S	LV	TYPE	DESCRIPTION OF ELEMENT		REMARK	ELEMENT NR.
TD-SYNC			1	22	17	2					P14		
			1	22	18	2					P15		
			1	22	19	2					P16		
			1	22	22	5				GENERATOR UNIT MCH	J07		1.820.725.00
TD-TCM1			1	20	3	8				CAPSTAN M. DRIVE AMPLIFIER	P03		
			1	20	41	1				CAPSTAN CONTROL UNIT	J02		1.820.764.00
			1	20	42	1B				CAPSTAN INTERFACE	J03		1.820.727.00
			1	38	1	8			F	FROM GRP39, ELM02	J01		
			1	39	1	8				FROM GRP20, ELM03 (BASIS B. TD)	P01		
			1	39	2	8			M	TO GRP38, ELM01 (CAPSTAN MOTOR)	P02		
TD-TCM2			1	20	3	10				CAPSTAN M. DRIVE AMPLIFIER	P03		
			1	20	41	2				CAPSTAN CONTROL UNIT	J02		1.820.764.00
			1	20	42	2B				CAPSTAN INTERFACE	J03		1.820.727.00
			1	38	1	11			F	FROM GRP39, ELM02	J01		
			1	39	1	10				FROM GRP20, ELM03 (BASIS B. TD)	P01		
			1	39	2	11			M	TO GRP38, ELM01 (CAPSTAN MOTOR)	P02		
TD-TML1			1	20	9	9				TACHO SENSOR SPOOLING M. LEFT	P09		
			1	20	44	1				TAPE DECK COUNTER / TIMER	J05		1.820.761.00
			1	36	1	9				TACHO SENSOR	P01		1.820.771.00
			1	60	4	9				FROM GR. 20 ELM 09	P04		
			1	60	8	9				TO TACHO SENSOR SP. MOTOR LEFT	P08		
TD-TML2			1	20	9	8				TACHO SENSOR SPOOLING M. LEFT	P09		
			1	20	44	2				TAPE DECK COUNTER / TIMER	J05		1.820.761.00
			1	36	1	8				TACHO SENSOR	P01		1.820.771.00
			1	60	4	8				FROM GR. 20 ELM 09	P04		
			1	60	8	8				TO TACHO SENSOR SP. MOTOR LEFT	P08		
TD-TMR1			1	20	10	9				TACHO SENSOR SPOOLING M. RIGHT	P10		
			1	20	44	3				TAPE DECK COUNTER / TIMER	J05		1.820.761.00
			1	37	1	9				TACHO SENSOR	P01		1.820.771.00
			1	60	3	9				FROM GR. 20 ELM 10	P03		
			1	60	7	9				TO TACHO SENSOR SP. MOTOR RIGHT	P07		
TD-TMR2			1	20	10	8				TACHO SENSOR SPOOLING M. RIGHT	P10		
			1	20	44	4				TAPE DECK COUNTER / TIMER	J05		1.820.761.00
			1	37	1	8				TACHO SENSOR	P01		1.820.771.00
			1	60	3	8				FROM GR. 20 ELM 10	P03		
			1	60	7	8				TO TACHO SENSOR SP. MOTOR RIGHT	P07		
TD-TRSP			1	20	6	9				OPTO + EXTENDED SENSORS	P06		
			1	20	43	9A				TAPE DECK PERIPHERY CONTR.	J04		1.820.762.00
			1	44	1	9				FROM GRP20, ELM06	P01		
TD-TRSPR			1	20	6	10				OPTO + EXTENDED SENSORS	P06		
			1	44	1	10				FROM GRP20, ELM06	P01		
TD-TX			1	20	46	11				MP-UNIT TO CONTROL MCH	J07		1.820.781.00
TD-YTRSP			1	20	6	7				OPTO + EXTENDED SENSORS	P06		
			1	44	1	7				FROM GRP20, ELM06	P01		
TD-9600			1	20	46	17				MP-UNIT TO CONTROL MCH	J07		1.820.781.00

```
*    WILLI STUDER AG    *    S I G N A L    W I R E    L I S T              * 89/07/20 *  9:25 *  P A G E 235   *
*                            * TAPE TRANSPORT & AUDIO MCH *                  * 89/04/19 - 00                    *
```

SIGNAL NAME	COLOR	MI	ASY	GRP	ELM	PNT	S	LV	TYPE	DESCRIPTION OF ELEMENT		REMARK	ELEMENT NR.
TDS-CLK			1	20	30	2				SSDA INT. SYNCHRONIZER	P20		
			1	20	47	17				TAPE DECK SERIAL INTERFACE	J08		1.820.763.00
			1	20	48	19A				MASTER SERIAL INTERFACE	J09		1.820.753.00
TDS-CTS			1	20	47	16				TAPE DECK SERIAL INTERFACE	J08		1.820.763.00
			1	20	48	11B				MASTER SERIAL INTERFACE	J09		1.820.753.00
TDS-DTR			1	20	47	15				TAPE DECK SERIAL INTERFACE	J08		1.820.763.00
			1	20	48	11A				MASTER SERIAL INTERFACE	J09		1.820.753.00
TDS-RX			1	20	47	13				TAPE DECK SERIAL INTERFACE	J08		1.820.763.00
			1	20	48	10A				MASTER SERIAL INTERFACE	J09		1.820.753.00
TDS-TX			1	20	47	14				TAPE DECK SERIAL INTERFACE	J08		1.820.763.00
			1	20	48	10B				MASTER SERIAL INTERFACE	J09		1.820.753.00
TL-A0			1	50	4	6				CONNECTOR LCD DISPLAY UNIT	P04		
			1	52	1	6				FROM GRP50, ELM04 (DISPLAY DRIVER)			
TL-CS			1	50	4	3				CONNECTOR LCD DISPLAY UNIT	P04		
			1	52	1	3				FROM GRP50, ELM04 (DISPLAY DRIVER)			
TL-D0			1	50	4	7				CONNECTOR LCD DISPLAY UNIT	P04		
			1	52	1	7				FROM GRP50, ELM04 (DISPLAY DRIVER)			
TL-D1			1	50	4	8				CONNECTOR LCD DISPLAY UNIT	P04		
			1	52	1	8				FROM GRP50, ELM04 (DISPLAY DRIVER)			
TL-D2			1	50	4	9				CONNECTOR LCD DISPLAY UNIT	P04		
			1	52	1	9				FROM GRP50, ELM04 (DISPLAY DRIVER)			
TL-D3			1	50	4	10				CONNECTOR LCD DISPLAY UNIT	P04		
			1	52	1	10				FROM GRP50, ELM04 (DISPLAY DRIVER)			
TL-D4			1	50	4	11				CONNECTOR LCD DISPLAY UNIT	P04		
			1	52	1	11				FROM GRP50, ELM04 (DISPLAY DRIVER)			
TL-D5			1	50	4	12				CONNECTOR LCD DISPLAY UNIT	P04		
			1	52	1	12				FROM GRP50, ELM04 (DISPLAY DRIVER)			
TL-D6			1	50	4	13				CONNECTOR LCD DISPLAY UNIT	P04		
			1	52	1	13				FROM GRP50, ELM04 (DISPLAY DRIVER)			
TL-D7			1	50	4	14				CONNECTOR LCD DISPLAY UNIT	P04		
			1	52	1	14				FROM GRP50, ELM04 (DISPLAY DRIVER)			
TL-ENB			1	50	4	4				CONNECTOR LCD DISPLAY UNIT	P04		
			1	52	1	4				FROM GRP50, ELM04 (DISPLAY DRIVER)			
TL-RESET			1	50	4	15				CONNECTOR LCD DISPLAY UNIT	P04		
			1	52	1	15				FROM GRP50, ELM04 (DISPLAY DRIVER)			
TL-WR			1	50	4	5				CONNECTOR LCD DISPLAY UNIT	P04		
			1	52	1	5				FROM GRP50, ELM04 (DISPLAY DRIVER)			

```
*    WILLI STUDER AG    *    S I G N A L    W I R E    L I S T              * 89/07/20 *  9:25 *  P A G E 236   *
*                            * TAPE TRANSPORT & AUDIO MCH *                  * 89/04/19 - 00                    *
```

SIGNAL NAME	COLOR	MI	ASY	GRP	ELM	PNT	S	LV	TYPE	DESCRIPTION OF ELEMENT		REMARK	ELEMENT NR.
TM-A			1	50	2	20				CONNECTOR PUSHBUTTON ASSEMBLY	P03		
			1	51	1	20				FROM GRP50,ELM02 (DISPLAY DRIVER)			
TM-ADR0			1	20	48	28B				MASTER SERIAL INTERFACE	J09		1.820.753.00
			1	20	49	31				MP-UNIT MASTER MCH	J10		1.820.784.00
			1	20	50	31				SMPTE/EBU INTERFACE	J11		1.820.751.00
			1	20	51	24A				MASTER TO AUDIO INTERFACE	J12		1.820.756.00
TM-ADR1			1	20	48	28A				MASTER SERIAL INTERFACE	J09		1.820.753.00
			1	20	49	30				MP-UNIT MASTER MCH	J10		1.820.784.00
			1	20	50	30				SMPTE/EBU INTERFACE	J11		1.820.751.00
			1	20	51	23A				MASTER TO AUDIO INTERFACE	J12		1.820.756.00
TM-ADR2			1	20	48	27B				MASTER SERIAL INTERFACE	J09		1.820.753.00
			1	20	49	29				MP-UNIT MASTER MCH	J10		1.820.784.00
			1	20	50	29				SMPTE/EBU INTERFACE	J11		1.820.751.00
			1	20	51	22A				MASTER TO AUDIO INTERFACE	J12		1.820.756.00
TM-ADR3			1	20	48	23B				MASTER SERIAL INTERFACE	J09		1.820.753.00
			1	20	49	6				MP-UNIT MASTER MCH	J10		1.820.784.00
			1	20	50	17				SMPTE/EBU INTERFACE	J11		1.820.751.00
TM-B			1	50	2	18				CONNECTOR PUSHBUTTON ASSEMBLY	P03		
			1	51	1	18				FROM GRP50,ELM02 (DISPLAY DRIVER)			
TM-BUSSW			1	20	49	8				MP-UNIT MASTER MCH	J10		1.820.784.00
			1	20	50	15				SMPTE/EBU INTERFACE	J11		1.820.751.00
TM-C			1	50	2	21				CONNECTOR PUSHBUTTON ASSEMBLY	P03		
			1	51	1	21				FROM GRP50,ELM02 (DISPLAY DRIVER)			
TM-CUE1			1	48	1	20				FROM GRP50, ELM03 (DISPLAY DRIVER)			
			1	48	2	5				CONNECTOR EDIT ASSEMBLY			
			1	49	1	5				FROM GRP48, ELM02 (PUSHBUTTON BOARD)			
			1	50	3	20				CONNECTOR COMMAND UNIT	P02		
TM-CUE2			1	48	1	22				FROM GRP50, ELM03 (DISPLAY DRIVER)			
			1	48	2	7				CONNECTOR EDIT ASSEMBLY			
			1	49	1	7				FROM GRP48, ELM02 (PUSHBUTTON BOARD)			
			1	50	3	22				CONNECTOR COMMAND UNIT	P02		
TM-C307K			1	20	49	22				MP-UNIT MASTER MCH	J10		1.820.784.00
TM-C614K			1	20	49	7				MP-UNIT MASTER MCH	J10		1.820.784.00
TM-C76K			1	20	49	16				MP-UNIT MASTER MCH	J10		1.820.784.00
TM-C9600			1	20	49	17				MP-UNIT MASTER MCH	J10		1.820.784.00
TM-D			1	50	2	22				CONNECTOR PUSHBUTTON ASSEMBLY	P03		
			1	51	1	22				FROM GRP50,ELM02 (DISPLAY DRIVER)			
TM-DADR0			1	20	15	19				DISPLAY DRIVER	P15		
			1	20	16	19				PARALLEL REMOTE INTERFACE	P16		
			1	20	48	8A				MASTER SERIAL INTERFACE	J09		1.820.753.00

```
*    WILLI STUDER AG    *    S I G N A L    W I R E    L I S T                 * 89/07/20  *   9:25  *  P A G E 237   *
*                                * TAPE TRANSPORT & AUDIO MCH *                 * 89/04/19 - 00                        *
```

SIGNAL NAME	COLOR	MI	ASY	GRP	ELM	PNT	S	LV	TYPE	DESCRIPTION OF ELEMENT		REMARK	ELEMENT NR.
<<-- CONT.OF			1	27	2	19				FROM GRP20, ELM16 (BASIS BOARD)	P02		
TM-DADR0			1	50	1	19				FROM GRP20, ELM15 (BASIS B. TD)	P01		
TM-DADR1			1	20	15	17				DISPLAY DRIVER	P15		
			1	20	48	7A				MASTER SERIAL INTERFACE	J09		1.820.753.00
			1	50	1	17				FROM GRP20, ELM15 (BASIS B. TD)	P01		
TM-DADR2			1	20	15	15				DISPLAY DRIVER	P15		
			1	20	48	6A				MASTER SERIAL INTERFACE	J09		1.820.753.00
			1	50	1	15				FROM GRP20, ELM15 (BASIS B. TD)	P01		
TM-DATA0			1	20	15	39				DISPLAY DRIVER	P15		
			1	20	16	39				PARALLEL REMOTE INTERFACE	P16		
			1	20	48	32B				MASTER SERIAL INTERFACE	J09		1.820.753.00
			1	20	49	39				MP-UNIT MASTER MCH	J10		1.820.784.00
			1	20	50	39				SMPTE/EBU INTERFACE	J11		1.820.751.00
			1	20	51	32A				MASTER TO AUDIO INTERFACE	J12		1.820.756.00
			1	27	2	39				FROM GRP20, ELM16 (BASIS BOARD)	P02		
			1	50	1	39				FROM GRP20, ELM15 (BASIS B. TD)	P01		
TM-DATA1			1	20	15	37				DISPLAY DRIVER	P15		
			1	20	16	37				PARALLEL REMOTE INTERFACE	P16		
			1	20	48	32A				MASTER SERIAL INTERFACE	J09		1.820.753.00
			1	20	49	38				MP-UNIT MASTER MCH	J10		1.820.784.00
			1	20	50	38				SMPTE/EBU INTERFACE	J11		1.820.751.00
			1	20	51	31A				MASTER TO AUDIO INTERFACE	J12		1.820.756.00
			1	27	2	37				FROM GRP20, ELM16 (BASIS BOARD)	P02		
			1	50	1	37				FROM GRP20, ELM15 (BASIS B. TD)	P01		
TM-DATA2			1	20	15	35				DISPLAY DRIVER	P15		
			1	20	16	35				PARALLEL REMOTE INTERFACE	P16		
			1	20	48	31B				MASTER SERIAL INTERFACE	J09		1.820.753.00
			1	20	49	37				MP-UNIT MASTER MCH	J10		1.820.784.00
			1	20	50	37				SMPTE/EBU INTERFACE	J11		1.820.751.00
			1	20	51	30A				MASTER TO AUDIO INTERFACE	J12		1.820.756.00
			1	27	2	35				FROM GRP20, ELM16 (BASIS BOARD)	P02		
			1	50	1	35				FROM GRP20, ELM15 (BASIS B. TD)	P01		
TM-DATA3			1	20	15	33				DISPLAY DRIVER	P15		
			1	20	16	33				PARALLEL REMOTE INTERFACE	P16		
			1	20	48	31A				MASTER SERIAL INTERFACE	J09		1.820.753.00
			1	20	49	36				MP-UNIT MASTER MCH	J10		1.820.784.00
			1	20	50	36				SMPTE/EBU INTERFACE	J11		1.820.751.00
			1	20	51	29A				MASTER TO AUDIO INTERFACE	J12		1.820.756.00
			1	27	2	33				FROM GRP20, ELM16 (BASIS BOARD)	P02		
			1	50	1	33				FROM GRP20, ELM15 (BASIS B. TD)	P01		
TM-DATA4			1	20	15	31				DISPLAY DRIVER	P15		
			1	20	16	31				PARALLEL REMOTE INTERFACE	P16		
			1	20	48	30B				MASTER SERIAL INTERFACE	J09		1.820.753.00
			1	20	49	35				MP-UNIT MASTER MCH	J10		1.820.784.00
			1	20	50	35				SMPTE/EBU INTERFACE	J11		1.820.751.00
			1	20	51	28A				MASTER TO AUDIO INTERFACE	J12		1.820.756.00
			1	27	2	31				FROM GRP20, ELM16 (BASIS BOARD)	P02		
			1	50	1	31				FROM GRP20, ELM15 (BASIS B. TD)	P01		

```
*    WILLI STUDER AG    *    S I G N A L    W I R E    L I S T                 * 89/07/20  *   9:25  *  P A G E 238   *
*                                * TAPE TRANSPORT & AUDIO MCH *                 * 89/04/19 - 00                        *
```

SIGNAL NAME	COLOR	MI	ASY	GRP	ELM	PNT	S	LV	TYPE	DESCRIPTION OF ELEMENT		REMARK	ELEMENT NR.
TM-DATA5			1	20	15	29				DISPLAY DRIVER	P15		
			1	20	16	29				PARALLEL REMOTE INTERFACE	P16		
			1	20	48	30A				MASTER SERIAL INTERFACE	J09		1.820.753.00
			1	20	49	34				MP-UNIT MASTER MCH	J10		1.820.784.00
			1	20	50	34				SMPTE/EBU INTERFACE	J11		1.820.751.00
			1	20	51	27A				MASTER TO AUDIO INTERFACE	J12		1.820.756.00
			1	27	2	29				FROM GRP20, ELM16 (BASIS BOARD)	P02		
			1	50	1	29				FROM GRP20, ELM15 (BASIS B. TD)	P01		
TM-DATA6			1	20	15	27				DISPLAY DRIVER	P15		
			1	20	16	27				PARALLEL REMOTE INTERFACE	P16		
			1	20	48	29B				MASTER SERIAL INTERFACE	J09		1.820.753.00
			1	20	49	33				MP-UNIT MASTER MCH	J10		1.820.784.00
			1	20	50	33				SMPTE/EBU INTERFACE	J11		1.820.751.00
			1	20	51	26A				MASTER TO AUDIO INTERFACE	J12		1.820.756.00
			1	27	2	27				FROM GRP20, ELM16 (BASIS BOARD)	P02		
			1	50	1	27				FROM GRP20, ELM15 (BASIS B. TD)	P01		
TM-DATA7			1	20	15	25				DISPLAY DRIVER	P15		
			1	20	16	25				PARALLEL REMOTE INTERFACE	P16		
			1	20	48	29A				MASTER SERIAL INTERFACE	J09		1.820.753.00
			1	20	49	32				MP-UNIT MASTER MCH	J10		1.820.784.00
			1	20	50	32				SMPTE/EBU INTERFACE	J11		1.820.751.00
			1	20	51	25A				MASTER TO AUDIO INTERFACE	J12		1.820.756.00
			1	27	2	25				FROM GRP20, ELM16 (BASIS BOARD)	P02		
			1	50	1	25				FROM GRP20, ELM15 (BASIS B. TD)	P01		
TM-DEN8			1	20	15	13				DISPLAY DRIVER	P15		
			1	20	16	13				PARALLEL REMOTE INTERFACE	P16		
			1	20	48	5A				MASTER SERIAL INTERFACE	J09		1.820.753.00
			1	27	2	13				FROM GRP20, ELM16 (BASIS BOARD)	P02		
			1	50	1	13				FROM GRP20, ELM15 (BASIS B. TD)	P01		
TM-DP			1	50	2	19				CONNECTOR PUSHBUTTON ASSEMBLY	P03		
			1	51	1	19				FROM GRP50,ELM02 (DISPLAY DRIVER)			
TM-DREN8			1	20	49	12				MP-UNIT MASTER MCH	J10		1.820.784.00
			1	20	50	12				SMPTE/EBU INTERFACE	J11		1.820.751.00
TM-DRES			1	20	15	9				DISPLAY DRIVER	P15		
			1	20	16	9				PARALLEL REMOTE INTERFACE	P16		
			1	20	48	3A				MASTER SERIAL INTERFACE	J09		1.820.753.00
			1	27	2	9				FROM GRP20, ELM16 (BASIS BOARD)	P02		
			1	50	1	9				FROM GRP20, ELM15 (BASIS B. TD)	P01		
TM-DRW			1	20	15	11				DISPLAY DRIVER	P15		
			1	20	16	11				PARALLEL REMOTE INTERFACE	P16		
			1	20	48	4A				MASTER SERIAL INTERFACE	J09		1.820.753.00
			1	27	2	11				FROM GRP20, ELM16 (BASIS BOARD)	P02		
			1	50	1	11				FROM GRP20, ELM15 (BASIS B. TD)	P01		
TM-DSL4			1	20	15	7				DISPLAY DRIVER	P15		
			1	20	48	1A				MASTER SERIAL INTERFACE	J09		1.820.753.00
			1	50	1	7				FROM GRP20, ELM15 (BASIS B. TD)	P01		

WILLI STUDER AG * S I G N A L W I R E L I S T * 89/07/20 * 9:25 * P A G E 239

* TAPE TRANSPORT & AUDIO MCH * * 89/04/19 - 00

SIGNAL NAME	COLOR	MI	ASY	GRP	ELM	PNT	S	LV	TYPE	DESCRIPTION OF ELEMENT		REMARK	ELEMENT NR.
TM-DSL5			1	20	16	7				PARALLEL REMOTE INTERFACE	P16		
			1	20	48	2A				MASTER SERIAL INTERFACE	J09		1.820.753.00
			1	27	2	7				FROM GRP20, ELM16 (BASIS BOARD)	P02		
TM-D0			1	50	2	35				CONNECTOR PUSHBUTTON ASSEMBLY	P03		
			1	51	1	35				FROM GRP50,ELM02 (DISPLAY DRIVER)			
TM-D1			1	50	2	34				CONNECTOR PUSHBUTTON ASSEMBLY	P03		
			1	51	1	34				FROM GRP50,ELM02 (DISPLAY DRIVER)			
TM-D2			1	50	2	33				CONNECTOR PUSHBUTTON ASSEMBLY	P03		
			1	51	1	33				FROM GRP50,ELM02 (DISPLAY DRIVER)			
TM-D3			1	50	2	32				CONNECTOR PUSHBUTTON ASSEMBLY	P03		
			1	51	1	32				FROM GRP50,ELM02 (DISPLAY DRIVER)			
TM-D4			1	50	2	31				CONNECTOR PUSHBUTTON ASSEMBLY	P03		
			1	51	1	31				FROM GRP50,ELM02 (DISPLAY DRIVER)			
TM-D5			1	50	2	30				CONNECTOR PUSHBUTTON ASSEMBLY	P03		
			1	51	1	30				FROM GRP50,ELM02 (DISPLAY DRIVER)			
TM-D6			1	50	2	29				CONNECTOR PUSHBUTTON ASSEMBLY	P03		
			1	51	1	29				FROM GRP50,ELM02 (DISPLAY DRIVER)			
TM-D7			1	50	2	28				CONNECTOR PUSHBUTTON ASSEMBLY	P03		
			1	51	1	28				FROM GRP50,ELM02 (DISPLAY DRIVER)			
TM-D8			1	50	2	27				CONNECTOR PUSHBUTTON ASSEMBLY	P03		
			1	51	1	27				FROM GRP50,ELM02 (DISPLAY DRIVER)			
TM-D9			1	50	2	26				CONNECTOR PUSHBUTTON ASSEMBLY	P03		
			1	51	1	26				FROM GRP50,ELM02 (DISPLAY DRIVER)			
TM-E			1	50	2	24				CONNECTOR PUSHBUTTON ASSEMBLY	P03		
			1	51	1	24				FROM GRP50,ELM02 (DISPLAY DRIVER)			
TM-ENB			1	20	48	27A				MASTER SERIAL INTERFACE	J09		1.820.753.00
			1	20	49	28				MP-UNIT MASTER MCH	J10		1.820.784.00
			1	20	50	28				SMPTE/EBU INTERFACE	J11		1.820.751.00
			1	20	51	21A				MASTER TO AUDIO INTERFACE	J12		1.820.756.00
TM-ENO			1	48	1	12				FROM GRP50, ELM03 (DISPLAY DRIVER)			
			1	48	2	4				CONNECTOR EDIT ASSEMBLY			
			1	49	1	4				FROM GRP48, ELM02 (PUSHBUTTON BOARD)			
			1	49	2	2				WIRE FIELD			
			1	50	3	12				CONNECTOR COMMAND UNIT	P02		
TM-EN1			1	50	2	9				CONNECTOR PUSHBUTTON ASSEMBLY	P03		
			1	51	1	9				FROM GRP50,ELM02 (DISPLAY DRIVER)			
TM-EN2			1	50	2	8				CONNECTOR PUSHBUTTON ASSEMBLY	P03		
			1	51	1	8				FROM GRP50,ELM02 (DISPLAY DRIVER)			
TM-EN3			1	50	2	7				CONNECTOR PUSHBUTTON ASSEMBLY	P03		
			1	51	1	7				FROM GRP50,ELM02 (DISPLAY DRIVER)			

WILLI STUDER AG * S I G N A L W I R E L I S T * 89/07/20 * 9:25 * P A G E 240

* TAPE TRANSPORT & AUDIO MCH * * 89/04/19 - 00

SIGNAL NAME	COLOR	MI	ASY	GRP	ELM	PNT	S	LV	TYPE	DESCRIPTION OF ELEMENT		REMARK	ELEMENT NR.
TM-EN4			1	50	2	6				CONNECTOR PUSHBUTTON ASSEMBLY	P03		
			1	51	1	6				FROM GRP50,ELM02 (DISPLAY DRIVER)			
TM-EVENT			1	20	32	26				BASIS BOARD AUDIO CONT. ELM15	P24		
			1	20	49	2				MP-UNIT MASTER MCH	J10		1.820.784.00
			1	21	15	26				TAPE DECK BASIS BOARD, ELM32	P08		
			1	21	21	8				MPU AUDIO CONTROL MCH	J06		1.820.782.00
			1	22	15	26				TAPE DECK BASIS BOARD, ELM32	P08		
			1	22	21	8				MPU AUDIO CONTROL MCH	J06		1.820.782.00
TM-F			1	50	2	23				CONNECTOR PUSHBUTTON ASSEMBLY	P03		
			1	51	1	23				FROM GRP50,ELM02 (DISPLAY DRIVER)			
TM-G			1	50	2	25				CONNECTOR PUSHBUTTON ASSEMBLY	P03		
			1	51	1	25				FROM GRP50,ELM02 (DISPLAY DRIVER)			
TM-IADR0			1	20	15	20				DISPLAY DRIVER	P15		
			1	20	16	20				PARALLEL REMOTE INTERFACE	P16		
			1	20	48	8B				MASTER SERIAL INTERFACE	J09		1.820.753.00
			1	27	2	20				FROM GRP20, ELM16 (BASIS BOARD)	P02		
			1	50	1	20				FROM GRP20, ELM15 (BASIS B. TD)	P01		
TM-IADR1			1	20	15	18				DISPLAY DRIVER	P15		
			1	20	48	7B				MASTER SERIAL INTERFACE	J09		1.820.753.00
			1	50	1	18				FROM GRP20, ELM15 (BASIS B. TD)	P01		
TM-IADR2			1	20	15	16				DISPLAY DRIVER	P15		
			1	20	48	6B				MASTER SERIAL INTERFACE	J09		1.820.753.00
			1	50	1	16				FROM GRP20, ELM15 (BASIS B. TD)	P01		
TM-IENB			1	20	15	14				DISPLAY DRIVER	P15		
			1	20	16	14				PARALLEL REMOTE INTERFACE	P16		
			1	20	48	5B				MASTER SERIAL INTERFACE	J09		1.820.753.00
			1	27	2	14				FROM GRP20, ELM16 (BASIS BOARD)	P02		
			1	50	1	14				FROM GRP20, ELM15 (BASIS B. TD)	P01		
TM-IRES			1	20	15	10				DISPLAY DRIVER	P15		
			1	20	16	10				PARALLEL REMOTE INTERFACE	P16		
			1	20	48	3B				MASTER SERIAL INTERFACE	J09		1.820.753.00
			1	27	2	10				FROM GRP20, ELM16 (BASIS BOARD)	P02		
			1	50	1	10				FROM GRP20, ELM15 (BASIS B. TD)	P01		
TM-IRQ			1	20	48	24B				MASTER SERIAL INTERFACE	J09		1.820.753.00
			1	20	49	13				MP-UNIT MASTER MCH	J10		1.820.784.00
TM-IRW			1	20	15	12				DISPLAY DRIVER	P15		
			1	20	16	12				PARALLEL REMOTE INTERFACE	P16		
			1	20	48	4B				MASTER SERIAL INTERFACE	J09		1.820.753.00
			1	27	2	12				FROM GRP20, ELM16 (BASIS BOARD)	P02		
			1	50	1	12				FROM GRP20, ELM15 (BASIS B. TD)	P01		
TM-ISL4			1	20	15	8				DISPLAY DRIVER	P15		
			1	20	48	1B				MASTER SERIAL INTERFACE	J09		1.820.753.00
			1	50	1	8				FROM GRP20, ELM15 (BASIS B. TD)	P01		

WILLI STUDER AG * S I G N A L W I R E L I S T * 89/07/20 * 9:25 * P A G E 241
* TAPE TRANSPORT & AUDIO MCH * * 89/04/19 - 00

SIGNAL NAME	COLOR	MI	ASY	GRP	ELM	PNT	S	LV	TYPE	DESCRIPTION OF ELEMENT		REMARK	ELEMENT NR.
TM-ISL5			1	20	16	8				PARALLEL REMOTE INTERFACE	P16		
			1	20	48	2B				MASTER SERIAL INTERFACE	J09		1.820.753.00
			1	27	2	8				FROM GRP20, ELM16 (BASIS BOARD)	P02		
TM-KBIR			1	20	15	23				DISPLAY DRIVER	P15		
			1	20	48	14B				MASTER SERIAL INTERFACE	J09		1.820.753.00
			1	50	1	23				FROM GRP20, ELM15 (BASIS B. TD)	P01		
TM-L1			1	50	2	37				CONNECTOR PUSHBUTTON ASSEMBLY	P03		
			1	51	1	37				FROM GRP50,ELM02 (DISPLAY DRIVER)			
TM-L2			1	50	2	36				CONNECTOR PUSHBUTTON ASSEMBLY	P03		
			1	51	1	36				FROM GRP50,ELM02 (DISPLAY DRIVER)			
TM-L3			1	50	2	38				CONNECTOR PUSHBUTTON ASSEMBLY	P03		
			1	51	1	38				FROM GRP50,ELM02 (DISPLAY DRIVER)			
TM-L4			1	50	2	39				CONNECTOR PUSHBUTTON ASSEMBLY	P03		
			1	51	1	39				FROM GRP50,ELM02 (DISPLAY DRIVER)			
TM-L5			1	50	2	40				CONNECTOR PUSHBUTTON ASSEMBLY	P03		
			1	51	1	40				FROM GRP50,ELM02 (DISPLAY DRIVER)			
TM-NMI			1	20	49	9				MP-UNIT MASTER MCH	J10		1.820.784.00
TM-REMIR			1	20	16	21				PARALLEL REMOTE INTERFACE	P16		
			1	20	48	19B				MASTER SERIAL INTERFACE	J09		1.820.753.00
			1	27	2	21				FROM GRP20, ELM16 (BASIS BOARD)	P02		
TM-RES			1	20	48	24A				MASTER SERIAL INTERFACE	J09		1.820.753.00
			1	20	50	26				SMPTE/EBU INTERFACE	J11		1.820.751.00
			1	20	51	19A				MASTER TO AUDIO INTERFACE	J12		1.820.756.00
TM-RESET			1	20	48	26A				MASTER SERIAL INTERFACE	J09		1.820.753.00
			1	20	49	26				MP-UNIT MASTER MCH	J10		1.820.784.00
TM-RESMP			1	20	48	23A				MASTER SERIAL INTERFACE	J09		1.820.753.00
			1	20	49	5				MP-UNIT MASTER MCH	J10		1.820.784.00
TM-RL0			1	50	2	12				CONNECTOR PUSHBUTTON ASSEMBLY	P03		
			1	51	1	12				FROM GRP50,ELM02 (DISPLAY DRIVER)			
TM-RL1			1	48	1	19				FROM GRP50, ELM03 (DISPLAY DRIVER)			
			1	48	2	6				CONNECTOR EDIT ASSEMBLY			
			1	49	1	6				FROM GRP48, ELM02 (PUSHBUTTON BOARD)			
			1	49	2	4				WIRE FIELD			
			1	50	2	13				CONNECTOR PUSHBUTTON ASSEMBLY	P03		
			1	50	3	19				CONNECTOR COMMAND UNIT	P02		
			1	51	1	13				FROM GRP50,ELM02 (DISPLAY DRIVER)			
TM-RL2			1	48	1	18				FROM GRP50, ELM03 (DISPLAY DRIVER)			
			1	50	2	14				CONNECTOR PUSHBUTTON ASSEMBLY	P03		
			1	50	3	18				CONNECTOR COMMAND UNIT	P02		
			1	51	1	14				FROM GRP50,ELM02 (DISPLAY DRIVER)			

WILLI STUDER AG * S I G N A L W I R E L I S T * 89/07/20 * 9:25 * P A G E 242
* TAPE TRANSPORT & AUDIO MCH * * 89/04/19 - 00

SIGNAL NAME	COLOR	MI	ASY	GRP	ELM	PNT	S	LV	TYPE	DESCRIPTION OF ELEMENT		REMARK	ELEMENT NR.
TM-RL3			1	48	1	17				FROM GRP50, ELM03 (DISPLAY DRIVER)			
			1	50	2	15				CONNECTOR PUSHBUTTON ASSEMBLY	P03		
			1	50	3	17				CONNECTOR COMMAND UNIT	P02		
			1	51	1	15				FROM GRP50,ELM02 (DISPLAY DRIVER)			
TM-RL4			1	48	1	16				FROM GRP50, ELM03 (DISPLAY DRIVER)			
			1	50	2	16				CONNECTOR PUSHBUTTON ASSEMBLY	P03		
			1	50	3	16				CONNECTOR COMMAND UNIT	P02		
			1	51	1	16				FROM GRP50,ELM02 (DISPLAY DRIVER)			
TM-RL5			1	48	1	15				FROM GRP50, ELM03 (DISPLAY DRIVER)			
			1	50	2	17				CONNECTOR PUSHBUTTON ASSEMBLY	P03		
			1	50	3	15				CONNECTOR COMMAND UNIT	P02		
			1	51	1	17				FROM GRP50,ELM02 (DISPLAY DRIVER)			
TM-RL6			1	48	1	14				FROM GRP50, ELM03 (DISPLAY DRIVER)			
			1	50	2	10				CONNECTOR PUSHBUTTON ASSEMBLY	P03		
			1	50	3	14				CONNECTOR COMMAND UNIT	P02		
			1	51	1	10				FROM GRP50,ELM02 (DISPLAY DRIVER)			
TM-RL7			1	48	1	13				FROM GRP50, ELM03 (DISPLAY DRIVER)			
			1	50	2	11				CONNECTOR PUSHBUTTON ASSEMBLY	P03		
			1	50	3	13				CONNECTOR COMMAND UNIT	P02		
			1	51	1	11				FROM GRP50,ELM02 (DISPLAY DRIVER)			
TM-RW			1	20	48	26B				MASTER SERIAL INTERFACE	J09		1.820.753.00
			1	20	49	27				MP-UNIT MASTER MCH	J10		1.820.784.00
			1	20	50	27				SMPTE/EBU INTERFACE	J11		1.820.751.00
			1	20	51	20A				MASTER TO AUDIO INTERFACE	J12		1.820.756.00
TM-RX			1	20	49	10				MP-UNIT MASTER MCH	J10		1.820.784.00
			1	20	50	10				SMPTE/EBU INTERFACE	J11		1.820.751.00
TM-SEIR			1	20	48	20B				MASTER SERIAL INTERFACE	J09		1.820.753.00
			1	20	50	13				SMPTE/EBU INTERFACE	J11		1.820.751.00
TM-SHIR			1	20	15	21				DISPLAY DRIVER	P15		
			1	20	48	14A				MASTER SERIAL INTERFACE	J09		1.820.753.00
			1	50	1	21				FROM GRP20, ELM15 (BASIS B. TD)	P01		
TM-SL2			1	20	48	22B				MASTER SERIAL INTERFACE	J09		1.820.753.00
			1	20	49	4				MP-UNIT MASTER MCH	J10		1.820.784.00
TM-SL3			1	20	49	3				MP-UNIT MASTER MCH	J10		1.820.784.00
			1	20	50	16				SMPTE/EBU INTERFACE	J11		1.820.751.00
TM-SL4			1	20	48	9A				MASTER SERIAL INTERFACE	J09		1.820.753.00
			1	20	49	23				MP-UNIT MASTER MCH	J10		1.820.784.00
			1	20	50	23				SMPTE/EBU INTERFACE	J11		1.820.751.00
TM-SL5			1	20	48	9B				MASTER SERIAL INTERFACE	J09		1.820.753.00
			1	20	49	24				MP-UNIT MASTER MCH	J10		1.820.784.00
			1	20	50	24				SMPTE/EBU INTERFACE	J11		1.820.751.00

```
*****************************************************************************************************************************
*    WILLI STUDER AG    *    S I G N A L     W I R E     L I S T              * 89/07/20 *   9:25 *   P A G E 243    *
*****************************************************************************************************************************
*                          * TAPE TRANSPORT & AUDIO MCH *                     * 89/04/19 - 00                            *
*****************************************************************************************************************************

SIGNAL NAME  COLOR  MI  ASY GRP ELM PNT  S  LV  TYPE          DESCRIPTION OF ELEMENT                  REMARK     ELEMENT NR.
-----------  -----  --  ---------------  -  --  ------------  --------------------------------------  ---------  ---------------
TM-SL6                   1  20  49  25                       MP-UNIT MASTER MCH              J10                1.820.784.00
                         1  20  50  25                       SMPTE/EBU INTERFACE             J11                1.820.751.00
                         1  20  51  14A                      MASTER TO AUDIO INTERFACE       J12                1.820.756.00
-----------  -----  --  ---------------  -  --  ------------  --------------------------------------  ---------  ---------------
TM-SL7                   1  20  49  15                       MP-UNIT MASTER MCH              J10                1.820.784.00
-----------  -----  --  ---------------  -  --  ------------  --------------------------------------  ---------  ---------------
TM-TX                    1  20  49  11                       MP-UNIT MASTER MCH              J10                1.820.784.00
                         1  20  50  11                       SMPTE/EBU INTERFACE             J11                1.820.751.00
-----------  -----  --  ---------------  -  --  ------------  --------------------------------------  ---------  ---------------
TONGEN                   1  21  22   2                       GENERATOR UNIT MCH              J07                1.820.725.00
                         1  21  50   7                       TO AUDIO RACK CH  1 TO  8       P10
                         1  21  51   7                       TO AUDIO RACK CH  9 TO 16       P11
                         1  21  52   7                       TO AUDIO RACK CH 17 TO 24       P12
                         1  22  22   2                       GENERATOR UNIT MCH              J07                1.820.725.00
                         1  22  50   7                       TO AUDIO RACK CH  1 TO  8       P10
                         1  22  51   7                       TO AUDIO RACK CH  9 TO 16       P11
                         1  22  52   7                       TO AUDIO RACK CH 17 TO 24       P12
                         3   1   2  19A                      CONTROLLER INTERNAL NRS CH 1    J02                1.820.815.00
                         3   1   7  19A                      CONTROLLER INTERNAL NRS CH 2    J07                1.820.815.00
                         3   1  12  19A                      CONTROLLER INTERNAL NRS CH 3    J12                1.820.815.00
                         3   1  17  19A                      CONTROLLER INTERNAL NRS CH 4    J17                1.820.815.00
                         3   1  70   7                                                      P01
                         3   2   2  19A                      CONTROLLER INTERNAL NRS CH 5    J02                1.820.815.00
                         3   2   7  19A                      CONTROLLER INTERNAL NRS CH 6    J07                1.820.815.00
                         3   2  12  19A                      CONTROLLER INTERNAL NRS CH 7    J12                1.820.815.00
                         3   2  17  19A                      CONTROLLER INTERNAL NRS CH 8    J17                1.820.815.00
                         3   2  70   7                                                      P01
                         4   1   2  19A                      CONTROLLER INTERNAL NRS CH 9    J02                1.820.815.00
                         4   1   7  19A                      CONTROLLER INTERNAL NRS CH10    J07                1.820.815.00
                         4   1  12  19A                      CONTROLLER INTERNAL NRS CH11    J12                1.820.815.00
                         4   1  17  19A                      CONTROLLER INTERNAL NRS CH12    J17                1.820.815.00
                         4   1  70   7                                                      P01
                         4   2   2  19A                      CONTROLLER INTERNAL NRS CH13    J02                1.820.815.00
                         4   2   7  19A                      CONTROLLER INTERNAL NRS CH14    J07                1.820.815.00
                         4   2  12  19A                      CONTROLLER INTERNAL NRS CH15    J12                1.820.815.00
                         4   2  17  19A                      CONTROLLER INTERNAL NRS CH16    J17                1.820.815.00
                         4   2  70   7                                                      P01
                         5   1   2  19A                      CONTROLLER INTERNAL NRS CH17    J02                1.820.815.00
                         5   1   7  19A                      CONTROLLER INTERNAL NRS CH18    J07                1.820.815.00
                         5   1  12  19A                      CONTROLLER INTERNAL NRS CH19    J12                1.820.815.00
                         5   1  17  19A                      CONTROLLER INTERNAL NRS CH20    J17                1.820.815.00
                         5   1  70   7                                                      P01
                         5   2   2  19A                      CONTROLLER INTERNAL NRS CH21    J02                1.820.815.00
                         5   2   7  19A                      CONTROLLER INTERNAL NRS CH22    J07                1.820.815.00
                         5   2  12  19A                      CONTROLLER INTERNAL NRS CH23    J12                1.820.815.00
                         5   2  17  19A                      CONTROLLER INTERNAL NRS CH24    J17                1.820.815.00
                         5   2  70   7                                                      P01
-----------  -----  --  ---------------  -  --  ------------  --------------------------------------  ---------  ---------------
TP-ADR0                  6   1   1  31                       CONNECTOR MPU VU PANEL MCH      J01
                         6   1   2  31                       SERVICE BOARD                   J02
                         6   2   1  31                                                       P01
                         6   3   1  31                                                       P01
-----------  -----  --  ---------------  -  --  ------------  --------------------------------------  ---------  ---------------

*****************************************************************************************************************************
*    WILLI STUDER AG    *    S I G N A L     W I R E     L I S T              * 89/07/20 *   9:25 *   P A G E 244    *
*****************************************************************************************************************************
*                          * TAPE TRANSPORT & AUDIO MCH *                     * 89/04/19 - 00                            *
*****************************************************************************************************************************

SIGNAL NAME  COLOR  MI  ASY GRP ELM PNT  S  LV  TYPE          DESCRIPTION OF ELEMENT                  REMARK     ELEMENT NR.
-----------  -----  --  ---------------  -  --  ------------  --------------------------------------  ---------  ---------------
TP-ADR1                  6   1   1  30                       CONNECTOR MPU VU PANEL MCH      J01
                         6   1   2  30                       SERVICE BOARD                   J02
                         6   2   1  30                                                       P01
                         6   3   1  30                                                       P01
-----------  -----  --  ---------------  -  --  ------------  --------------------------------------  ---------  ---------------
TP-ADR2                  6   1   1  29                       CONNECTOR MPU VU PANEL MCH      J01
                         6   1   2  29                       SERVICE BOARD                   J02
                         6   2   1  29                                                       P01
                         6   3   1  29                                                       P01
-----------  -----  --  ---------------  -  --  ------------  --------------------------------------  ---------  ---------------
TP-ADR3                  6   1   1   6                       CONNECTOR MPU VU PANEL MCH      J01
                         6   1   2   6                       SERVICE BOARD                   J02
                         6   2   1   6                                                       P01
                         6   3   1   6                                                       P01
-----------  -----  --  ---------------  -  --  ------------  --------------------------------------  ---------  ---------------
TP-BUSSW                 6   1   1   8                       CONNECTOR MPU VU PANEL MCH      J01
                         6   1   2   8                       SERVICE BOARD                   J02
                         6   2   1   8                                                       P01
                         6   3   1   8                                                       P01
-----------  -----  --  ---------------  -  --  ------------  --------------------------------------  ---------  ---------------
TP-C307K                 6   1   1  22                       CONNECTOR MPU VU PANEL MCH      J01
                         6   1   2  22                       SERVICE BOARD                   J02
                         6   2   1  22                                                       P01
                         6   3   1  22                                                       P01
-----------  -----  --  ---------------  -  --  ------------  --------------------------------------  ---------  ---------------
TP-C614K                 6   1   1   7                       CONNECTOR MPU VU PANEL MCH      J01
                         6   1   2   7                       SERVICE BOARD                   J02
                         6   2   1   7                                                       P01
                         6   3   1   7                                                       P01
-----------  -----  --  ---------------  -  --  ------------  --------------------------------------  ---------  ---------------
TP-C76K                  6   1   1  16                       CONNECTOR MPU VU PANEL MCH      J01
                         6   1   2  16                       SERVICE BOARD                   J02
                         6   2   1  16                                                       P01
                         6   3   1  16                                                       P01
-----------  -----  --  ---------------  -  --  ------------  --------------------------------------  ---------  ---------------
TP-C9600                 6   1   1  17                       CONNECTOR MPU VU PANEL MCH      J01
                         6   1   2  17                       SERVICE BOARD                   J02
                         6   2   1  17                                                       P01
                         6   3   1  17                                                       P01
-----------  -----  --  ---------------  -  --  ------------  --------------------------------------  ---------  ---------------
TP-DATA0                 6   1   1  39                       CONNECTOR MPU VU PANEL MCH      J01
                         6   1   2  39                       SERVICE BOARD                   J02
                         6   2   1  39                                                       P01
                         6   3   1  39                                                       P01
-----------  -----  --  ---------------  -  --  ------------  --------------------------------------  ---------  ---------------
TP-DATA1                 6   1   1  38                       CONNECTOR MPU VU PANEL MCH      J01
                         6   1   2  38                       SERVICE BOARD                   J02
                         6   2   1  38                                                       P01
                         6   3   1  38                                                       P01
-----------  -----  --  ---------------  -  --  ------------  --------------------------------------  ---------  ---------------
TP-DATA2                 6   1   1  37                       CONNECTOR MPU VU PANEL MCH      J01
                         6   1   2  37                       SERVICE BOARD                   J02
                         6   2   1  37                                                       P01
                         6   3   1  37                                                       P01
-----------  -----  --  ---------------  -  --  ------------  --------------------------------------  ---------  ---------------
```

* WILLI STUDER AG * S I G N A L W I R E L I S T * 89/07/20 * 9:25 * P A G E 245 *
* * TAPE TRANSPORT & AUDIO MCH * * 89/04/19 - 00 *

SIGNAL NAME	COLOR	MI	ASY	GRP	ELM	PNT	S	LV	TYPE	DESCRIPTION OF ELEMENT		REMARK	ELEMENT NR.
TP-DATA3			6	1	1	36				CONNECTOR MPU VU PANEL MCH	J01		
			6	1	2	36				SERVICE BOARD	J02		
			6	2	1	36					P01		
			6	3	1	36					P01		
TP-DATA4			6	1	1	35				CONNECTOR MPU VU PANEL MCH	J01		
			6	1	2	35				SERVICE BOARD	J02		
			6	2	1	35					P01		
			6	3	1	35					P01		
TP-DATA5			6	1	1	34				CONNECTOR MPU VU PANEL MCH	J01		
			6	1	2	34				SERVICE BOARD	J02		
			6	2	1	34					P01		
			6	3	1	34					P01		
TP-DATA6			6	1	1	33				CONNECTOR MPU VU PANEL MCH	J01		
			6	1	2	33				SERVICE BOARD	J02		
			6	2	1	33					P01		
			6	3	1	33					P01		
TP-DATA7			6	1	1	32				CONNECTOR MPU VU PANEL MCH	J01		
			6	1	2	32				SERVICE BOARD	J02		
			6	2	1	32					P01		
			6	3	1	32					P01		
TP-DRENB			6	1	1	12				CONNECTOR MPU VU PANEL MCH	J01		
			6	1	2	12				SERVICE BOARD	J02		
			6	2	1	12					P01		
			6	3	1	12					P01		
TP-ENB			6	1	1	28				CONNECTOR MPU VU PANEL MCH	J01		
			6	1	2	28				SERVICE BOARD	J02		
			6	2	1	28					P01		
			6	3	1	28					P01		
TP-IRQ			6	1	1	13				CONNECTOR MPU VU PANEL MCH	J01		
			6	1	2	13				SERVICE BOARD	J02		
			6	2	1	13					P01		
			6	3	1	13					P01		
TP-NMI			6	1	1	9				CONNECTOR MPU VU PANEL MCH	J01		
			6	1	2	9				SERVICE BOARD	J02		
			6	2	1	9					P01		
			6	3	1	9					P01		
TP-PWRON			6	1	1	14				CONNECTOR MPU VU PANEL MCH	J01		
			6	1	2	14				SERVICE BOARD	J02		
			6	2	1	14					P01		
			6	3	1	14					P01		
TP-RESET			6	1	1	26				CONNECTOR MPU VU PANEL MCH	J01		
			6	1	2	26				SERVICE BOARD	J02		
			6	2	1	26					P01		
			6	3	1	26					P01		

* WILLI STUDER AG * S I G N A L W I R E L I S T * 89/07/20 * 9:25 * P A G E 246 *
* * TAPE TRANSPORT & AUDIO MCH * * 89/04/19 - 00 *

SIGNAL NAME	COLOR	MI	ASY	GRP	ELM	PNT	S	LV	TYPE	DESCRIPTION OF ELEMENT		REMARK	ELEMENT NR.
TP-RESMP			6	1	1	5				CONNECTOR MPU VU PANEL MCH	J01		
			6	1	2	5				SERVICE BOARD	J02		
			6	2	1	5					P01		
			6	3	1	5					P01		
TP-RW			6	1	1	27				CONNECTOR MPU VU PANEL MCH	J01		
			6	1	2	27				SERVICE BOARD	J02		
			6	2	1	27					P01		
			6	3	1	27					P01		
TP-RX			6	1	1	10				CONNECTOR MPU VU PANEL MCH	J01		
			6	1	2	10				SERVICE BOARD	J02		
			6	2	1	10					P01		
			6	3	1	10					P01		
TP-SL2			6	1	1	4				CONNECTOR MPU VU PANEL MCH	J01		
			6	1	2	4				SERVICE BOARD	J02		
			6	2	1	4					P01		
			6	3	1	4					P01		
TP-SL3			6	1	1	3				CONNECTOR MPU VU PANEL MCH	J01		
			6	1	2	3				SERVICE BOARD	J02		
			6	2	1	3					P01		
			6	3	1	3					P01		
TP-SL4			6	1	1	23				CONNECTOR MPU VU PANEL MCH	J01		
			6	1	2	23				SERVICE BOARD	J02		
			6	2	1	23					P01		
			6	3	1	23					P01		
TP-SL5			6	1	1	24				CONNECTOR MPU VU PANEL MCH	J01		
			6	1	2	24				SERVICE BOARD	J02		
			6	2	1	24					P01		
			6	3	1	24					P01		
TP-SL6			6	1	1	25				CONNECTOR MPU VU PANEL MCH	J01		
			6	1	2	25				SERVICE BOARD	J02		
			6	2	1	25					P01		
			6	3	1	25					P01		
TP-SL7			6	1	1	15				CONNECTOR MPU VU PANEL MCH	J01		
			6	1	2	15				SERVICE BOARD	J02		
			6	2	1	15					P01		
			6	3	1	15					P01		
TP-TX			6	1	1	11				CONNECTOR MPU VU PANEL MCH	J01		
			6	1	2	11				SERVICE BOARD	J02		
			6	2	1	11					P01		
			6	3	1	11					P01		
TR-A			1	25	1	3			B	CONN. AUTOLOCATOR, REMOTE TIMER	J01		
			1	26	2	5				TO GRP25, ELM01 (REMOTE PANEL)	P02		
TR-B			1	25	1	7			B	CONN. AUTOLOCATOR, REMOTE TIMER	J01		
			1	26	2	4				TO GRP25, ELM01 (REMOTE PANEL)	P02		

* WILLI STUDER AG * S I G N A L W I R E L I S T * 89/07/20 * 9:25 * P A G E 247 *

* * TAPE TRANSPORT & AUDIO MCH * * 89/04/19 - 00 *

SIGNAL NAME	COLOR	MI	ASY	GRP	ELM	PNT	S	LV	TYPE	DESCRIPTION OF ELEMENT		REMARK	ELEMENT NR.
TRACK00			1	22	25	9B				FLOPPY DISK CONTROLLER	J10		1.820.726.00
			1	22	26	26				FLOPPY DISK CONNECTOR	P13		1.820.000.00
TRANSA			1	20	31	3				TO SMPTE/EBU CONNECTOR	P21		
			1	20	50	3				SMPTE/EBU INTERFACE	J11		1.820.751.00
			1	23	10	2				SERIAL REMOTE	J09		
			1	23	11	2				SERIAL REMOTE	J10		
			1	25	4	2			B	CONNECTOR SMPTE/EBU BUS	J04		
			1	25	5	2			B	CONNECTOR SMPTE/EBU BUS	J05		
TRANSB			1	20	31	4				TO SMPTE/EBU CONNECTOR	P21		
			1	20	50	4				SMPTE/EBU INTERFACE	J11		1.820.751.00
			1	23	10	7				SERIAL REMOTE	J09		
			1	23	11	7				SERIAL REMOTE	J10		
			1	25	4	7			B	CONNECTOR SMPTE/EBU BUS	J04		
			1	25	5	7			B	CONNECTOR SMPTE/EBU BUS	J05		
TRANSCM			1	20	31	2				TO SMPTE/EBU CONNECTOR	P21		
			1	20	50	2				SMPTE/EBU INTERFACE	J11		1.820.751.00
			1	23	10	6				SERIAL REMOTE	J09		
			1	23	11	6				SERIAL REMOTE	J10		
			1	25	4	6			B	CONNECTOR SMPTE/EBU BUS	J04		
			1	25	5	6			B	CONNECTOR SMPTE/EBU BUS	J05		
TS-RX			1	21	4	1					P01		
			1	21	20	8				COMMUNICATIONS CONTROLLER	J05		1.820.718.00
			1	22	4	1					P01		
			1	22	20	8				COMMUNICATIONS CONTROLLER	J05		1.820.718.00
TS-TX			1	21	5	1					P02		
			1	21	20	7				COMMUNICATIONS CONTROLLER	J05		1.820.718.00
			1	22	5	1					P02		
			1	22	20	7				COMMUNICATIONS CONTROLLER	J05		1.820.718.00
WRITE0A			1	22	25	11B				FLOPPY DISK CONTROLLER	J10		1.820.726.00
			1	22	26	22				FLOPPY DISK CONNECTOR	P13		1.820.000.00
WRITEGA			1	22	25	10B				FLOPPY DISK CONTROLLER	J10		1.820.726.00
			1	22	26	24				FLOPPY DISK CONNECTOR	P13		1.820.000.00
WRITEPRO			1	22	25	8B				FLOPPY DISK CONTROLLER	J10		1.820.726.00
			1	22	26	28				FLOPPY DISK CONNECTOR	P13		1.820.000.00
Y-CRTALK			2	1	7	12				REPRODUCE HEAD, CH 01 TO 08	P07		
			2	1	8	12				REPRODUCE HEAD, CH 09 TO 16	P08		
			2	1	9	12				REPRODUCE HEAD, CH 17 TO 24	P09		
			2	2	1	12				INPUT	J01		
			2	2	2	12				OUTPUT	P01		
			2	3	1	12				INPUT	J01		
			2	3	2	12				OUTPUT	P01		
			2	4	1	12				INPUT	J01		
			2	4	2	12				OUTPUT	P01		

* WILLI STUDER AG * S I G N A L W I R E L I S T * 89/07/20 * 9:25 * P A G E 248 *

* * TAPE TRANSPORT & AUDIO MCH * * 89/04/19 - 00 *

SIGNAL NAME	COLOR	MI	ASY	GRP	ELM	PNT	S	LV	TYPE	DESCRIPTION OF ELEMENT		REMARK	ELEMENT NR.
0.0 VCU			1	20	15	22				DISPLAY DRIVER	P15		
			1	20	15	24				DISPLAY DRIVER	P15		
			1	20	15	26				DISPLAY DRIVER	P15		
			1	20	15	28				DISPLAY DRIVER	P15		
			1	20	15	30				DISPLAY DRIVER	P15		
			1	20	15	32				DISPLAY DRIVER	P15		
			1	20	15	34				DISPLAY DRIVER	P15		
			1	20	15	36				DISPLAY DRIVER	P15		
			1	20	15	38				DISPLAY DRIVER	P15		
			1	20	15	40				DISPLAY DRIVER	P15		
			1	20	16	16				PARALLEL REMOTE INTERFACE	P16		
			1	20	16	22				PARALLEL REMOTE INTERFACE	P16		
			1	20	16	26				PARALLEL REMOTE INTERFACE	P16		
			1	20	16	28				PARALLEL REMOTE INTERFACE	P16		
			1	20	16	30				PARALLEL REMOTE INTERFACE	P16		
			1	20	16	32				PARALLEL REMOTE INTERFACE	P16		
			1	20	16	34				PARALLEL REMOTE INTERFACE	P16		
			1	20	16	36				PARALLEL REMOTE INTERFACE	P16		
			1	20	16	38				PARALLEL REMOTE INTERFACE	P16		
			1	20	16	40				PARALLEL REMOTE INTERFACE	P16		
			1	27	2	16				FROM GRP20, ELM16 (BASIS BOARD)	P02		
			1	27	2	22				FROM GRP20, ELM16 (BASIS BOARD)	P02		
			1	27	2	26				FROM GRP20, ELM16 (BASIS BOARD)	P02		
			1	27	2	28				FROM GRP20, ELM16 (BASIS BOARD)	P02		
			1	27	2	30				FROM GRP20, ELM16 (BASIS BOARD)	P02		
			1	27	2	32				FROM GRP20, ELM16 (BASIS BOARD)	P02		
			1	27	2	34				FROM GRP20, ELM16 (BASIS BOARD)	P02		
			1	27	2	36				FROM GRP20, ELM16 (BASIS BOARD)	P02		
			1	27	2	38				FROM GRP20, ELM16 (BASIS BOARD)	P02		
			1	27	2	40				FROM GRP20, ELM16 (BASIS BOARD)	P02		
			1	50	1	22				FROM GRP20, ELM15 (BASIS B. TD)	P01		
			1	50	1	24				FROM GRP20, ELM15 (BASIS B. TD)	P01		
			1	50	1	26				FROM GRP20, ELM15 (BASIS B. TD)	P01		
			1	50	1	28				FROM GRP20, ELM15 (BASIS B. TD)	P01		
			1	50	1	30				FROM GRP20, ELM15 (BASIS B. TD)	P01		
			1	50	1	32				FROM GRP20, ELM15 (BASIS B. TD)	P01		
			1	50	1	34				FROM GRP20, ELM15 (BASIS B. TD)	P01		
			1	50	1	36				FROM GRP20, ELM15 (BASIS B. TD)	P01		
			1	50	1	38				FROM GRP20, ELM15 (BASIS B. TD)	P01		
			1	50	1	40				FROM GRP20, ELM15 (BASIS B. TD)	P01		
0-PNOISE			1	22	17	9					P14		
			1	22	18	9					P15		
			1	22	19	9					P16		
			1	22	22	11				GENERATOR UNIT MCH	J07		1.820.725.00
0-RES			1	22	17	6					P14		
			1	22	18	6					P15		
			1	22	19	6					P16		
			1	22	22	9				GENERATOR UNIT MCH	J07		1.820.725.00
OSENS	5		6	4	2	4			F	DC OUTPUT			

```
*    WILLI STUDER AG    *    S I G N A L    W I R E    L I S T              * 89/07/20  *   9:25  *   P A G E 249   *
*                            * TAPE TRANSPORT & AUDIO MCH *                  * 89/04/19 - 00                          *
```

SIGNAL NAME	COLOR	MI	ASY	GRP	ELM	PNT	S	LV	TYPE	DESCRIPTION OF ELEMENT		REMARK	ELEMENT NR.
OSTABIN	4		1	20	62	8			L	WIRE FIELD			
	4		1	20	62	9			L	WIRE FIELD			
	4		1	20	70	23			F	FROM GRP35, ELM59	J13		
	4		1	20	71	1			F	TO CAPSTAN MOTOR DRIVE AMPLIFIER	P24		
	0		1	24	7	1			L	VU METER PANEL EXTERNAL			
	0		1	24	7	2			L	VU METER PANEL EXTERNAL			
	0		1	24	7	3			L	VU METER PANEL EXTERNAL			
			1	30	1	2			BX	SUPPLY INPUT	J03		
			1	31	3	1			BX	DC INPUT (GRP35, ELM54)	P03		
			1	31	3	2			BX	DC INPUT (GRP35, ELM54)	P03		
			1	32	3	1			BX	DC INPUT (GRP35, ELM56)	P03		
			1	33	1	2			BX	SUPPLY INPUT	J03		
	0		1	35	1	1			U	WIRE FIELD			
	0		1	35	1	2			U	WIRE FIELD			
	0		1	35	1	6			U	WIRE FIELD			
	0		1	35	1	8			U	WIRE FIELD			
	0		1	35	1	9			U	WIRE FIELD			
	0		1	35	1	13			U	WIRE FIELD			
	0		1	35	1	15			U	WIRE FIELD			
	0		1	35	1	16			U	WIRE FIELD			
	0		1	35	1	19			U	WIRE FIELD			
	0		1	35	1	20			U	WIRE FIELD			
	0		1	35	1	26			L	WIRE FIELD			
	0		1	35	1	27			L	WIRE FIELD			
	0		1	35	1	28			L	WIRE FIELD			
	0		1	35	1	29			L	WIRE FIELD			
	0		1	35	1	31			L	WIRE FIELD			
	0		1	35	1	33			L	WIRE FIELD			
	0		1	35	1	34			L	WIRE FIELD			
	0		1	35	1	35			L	WIRE FIELD			
	0		1	35	1	38			L	WIRE FIELD			
	0		1	35	50	1			L	CONNECTOR TO VU METER PANEL	J04		
	0		1	35	50	2			L	CONNECTOR TO VU METER PANEL	J04		
	0		1	35	50	3			L	CONNECTOR TO VU METER PANEL	J04		
	0		1	35	51	1			L	CONN. TO VU METER PANEL EXTERNAL	J05		
	0		1	35	51	2			L	CONN. TO VU METER PANEL EXTERNAL	J05		
	0		1	35	51	3			L	CONN. TO VU METER PANEL EXTERNAL	J05		
	0		1	35	52	2			AX	FROM GRP30, ELM01	P03		
	0		1	35	54	1			AX	TO GRP31, ELM03	P05		
	0		1	35	54	2			AX	TO GRP31, ELM03	P05		
	0		1	35	56	1			AX	TO GRP32, ELM03	P07		
	0		1	35	57	2			AX	TO GRP33, ELM01	P08		
	0		1	35	58	2			AX	FROM ASY07, GRP11, ELM01	P09		
	0		1	35	58	4			AX	FROM ASY07, GRP11, ELM01	P09		
	0		1	35	58	6			AX	FROM ASY07, GRP11, ELM01	P09		
	0		1	35	58	8			AX	FROM ASY07, GRP11, ELM01	P09		
	0		1	35	59	23			M	TO GRP20, ELM70	P10		
			1	39	3	1			M	FROM GRP20, ELM71 (BASIS B. TD)	P03		
			6	4	1	2			Y	CONNECTOR POWER INPUT			
	S		6	17	1	1				CONNECTOR FROM ASS01, GRP35			
	6		6	17	1	2				CONNECTOR FROM ASS01, GRP35			
	7		6	17	1	3				CONNECTOR FROM ASS01, GRP35			
	S-7-6		6	17	3	2			Y	TO DC CONVERTER			
			7	9	1	2				CAPACITOR	C01		59.07.0004
			7	9	2	2				CAPACITOR	C02		59.07.0004

```
*    WILLI STUDER AG    *    S I G N A L    W I R E    L I S T              * 89/07/20  *   9:25  *   P A G E 250   *
*                            * TAPE TRANSPORT & AUDIO MCH *                  * 89/04/19 - 00                          *
```

SIGNAL NAME	COLOR	MI	ASY	GRP	ELM	PNT	S	LV	TYPE	DESCRIPTION OF ELEMENT		REMARK	ELEMENT NR.
<<-- CONT.OF			7	9	3	2				CAPACITOR	C03		59.07.0004
OSTABIN			7	9	4	7				INPUT START RELAIS	K01		56.02.0105
			7	9	5	2			L	RESISTOR (4 PIECES)	R01		57.92.1681
	0		7	9	8	1			J	OUTPUT, NEG.			54.33.6007
	0		7	9	8	2			J	OUTPUT, NEG.			54.33.6007
	0		7	9	8	3			J	OUTPUT, NEG.			54.33.6007
	0		7	9	8	4			J	OUTPUT, NEG.			54.33.6007
			7	9	9	2			L	RESISTOR	R02		57.92.4152
	0		7	9	10	1			J				
	0		7	11	1	2			BX		J02		54.25.0310
	0		7	11	1	4			BX		J02		54.25.0310
	0		7	11	1	6			BX		J02		54.25.0310
	0		7	11	1	8			BX		J02		54.25.0310
	0		7	14	1	2			BX				54.25.0308
OSTABINS	0		7	8	1	4			L		DZ01		70.01.0232
	0		7	8	2	4			L		DZ02		70.01.0232
	0		7	8	3	4			L		DZ03		70.01.0232
	0		7	8	4	4			L		DZ04		70.01.0232
	0		7	9	4	1			J	INPUT START RELAIS	K01		56.02.0105
	0		7	9	4	2			J	INPUT START RELAIS	K01		56.02.0105
	0		7	9	4	3			J	INPUT START RELAIS	K01		56.02.0105
	0		7	9	4	4			J	INPUT START RELAIS	K01		56.02.0105
			7	9	5	1			L	RESISTOR (4 PIECES)	R01		57.92.1681

```
*****************************************************************************************************************************
*    WILLI STUDER AG   *    S I G N A L     S T A T I S T I C S            *  89/07/20  *   9:25  *   P A G E 251   *
*****************************************************************************************************************************
*                              * TAPE TRANSPORT & AUDIO MCH *                *  89/04/19 - 00                            *
*****************************************************************************************************************************
```

SIG.NR	SIGNAL NAME	OCCURRENCE	COLOR	SPECIAL # * < @	#-NODE ASY GRP
000001	+ 0.0	2130			
000002	+ 0.0T	1	6		
000003	+ 5.0	24			
000004	+ 5.6	432			
000005	+ 5V	2			
000006	+SENS	1	4		
000007	+STABIN	23	2		
000008	+STABIN1	20			
000009	+STABIN2	16			
000010	+STABIN3	23			
000011	+STABIN4	42			
000012	+VMOT	10			
000013	+YSUP	1			
000014	+0.0	6			
000015	+0.0SENS	3	0		
000016	+12.0	3			
000017	+15.0	294			
000018	+15.0T	1	2		
000019	+24.0	33			
000020	+24.0L	4			
000021	+24.0NRS	32			
000022	+24.0REM	5			
000023	+26.0	17			
000024	+5.6SENS	3	4		
000025	-VMOT	10			
000026	-YSUP	1			
000027	-15.0	285			
000028	-26.0	17			
000029	A-PNOISE	4			
000030	A-PNRDT	2			
000031	A-PNTDT	2			
000032	A-RES	4			
000033	ADS-CLK	6			
000034	ADS-CTS	6			
000035	ADS-DTR	6			
000036	ADS-RX	6			
000037	ADS-TX	6			
000038	AFCSW-01	2			
000039	AFCSW-02	2			
000040	AFCSW-03	2			
000041	AFCSW-04	2			
000042	AFCSW-05	2			
000043	AFCSW-06	2			
000044	AFCSW-07	2			
000045	AFCSW-08	2			
000046	AFCSW-09	2			
000047	AFCSW-10	2			
000048	AFCSW-11	2			
000049	AFCSW-12	2			
000050	AFCSW-13	2			
000051	AFCSW-14	2			
000052	AFCSW-15	2			
000053	AFCSW-16	2			
000054	AFCSW-17	2			
000055	AFCSW-18	2			
000056	AFCSW-19	2			
000057	AFCSW-20	2			
000058	AFCSW-21	2			
000059	AFCSW-22	2			
000060	AFCSW-23	2			
000061	AFCSW-24	2			
000062	AN-CSPDC	4			
000063	AN-ICL	2			
000064	AN-ICLD	3			
000065	AN-ICR	3			
000066	AN-ICRD	5			
000067	AN-IRL	2			
000068	AN-IRR	3			
000069	AN-RES1	5			
000070	AN-RES2	5			
000071	AN-RES3	5			
000072	AN-RES4	1			
000073	AN-TLKLC	6			
000074	AN-TLKUC	6			
000075	AN-TLK01	2			
000076	AN-TLK08	2			
000077	AN-TLK09	2			
000078	AN-TLK16	2			
000079	AN-TLK17	2			
000080	AN-TLK24	2			
000081	AN-TTL	6			
000082	AN-TTR	6			
000083	ANM-SH1	4			
000084	ANM-SH2	4			
000085	ANM-SH3	4			
000086	ARECEIV	1	3		
000087	ARECEIVB	1	8		
000088	ATRANS	1	4		
000089	ATRANSB	1	2		
000090	B-RCD-01	5			
000091	B-RCD-02	5			
000092	B-RCD-03	5			
000093	B-RCD-04	5			
000094	B-RCD-05	5			
000095	B-RCD-06	5			
000096	B-RCD-07	5			
000097	B-RCD-08	5			
000098	B-RCD-09	5			
000099	B-RCD-10	5			
000100	B-RCD-11	5			
000101	B-RCD-12	5			
000102	B-RCD-13	5			
000103	B-RCD-14	5			
000104	B-RCD-15	5			
000105	B-RCD-16	5			

```
*****************************************************************************************************************************
*    WILLI STUDER AG   *    S I G N A L     S T A T I S T I C S            *  89/07/20  *   9:25  *   P A G E 252   *
*****************************************************************************************************************************
*                              * TAPE TRANSPORT & AUDIO MCH *                *  89/04/19 - 00                            *
*****************************************************************************************************************************
```

SIG.NR	SIGNAL NAME	OCCURRENCE	COLOR	SPECIAL # * < @	#-NODE ASY GRP
000106	B-RCD-17	5			
000107	B-RCD-18	5			
000108	B-RCD-19	5			
000109	B-RCD-20	5			
000110	B-RCD-21	5			
000111	B-RCD-22	5			
000112	B-RCD-23	5			
000113	B-RCD-24	5			
000114	BIAFB-01	2			
000115	BIAFB-02	2			
000116	BIAFB-03	2			
000117	BIAFB-04	2			
000118	BIAFB-05	2			
000119	BIAFB-06	2			
000120	BIAFB-07	2			
000121	BIAFB-08	2			
000122	BIAFB-09	2			
000123	BIAFB-10	2			
000124	BIAFB-11	2			
000125	BIAFB-12	2			
000126	BIAFB-13	2			
000127	BIAFB-14	2			
000128	BIAFB-15	2			
000129	BIAFB-16	2			
000130	BIAFB-17	2			
000131	BIAFB-18	2			
000132	BIAFB-19	2			
000133	BIAFB-20	2			
000134	BIAFB-21	2			
000135	BIAFB-22	2			
000136	BIAFB-23	2			
000137	BIAFB-24	2			
000138	BIASA-01	2			
000139	BIASA-02	2			
000140	BIASA-03	2			
000141	BIASA-04	2			
000142	BIASA-05	2			
000143	BIASA-06	2			
000144	BIASA-07	2			
000145	BIASA-08	2			
000146	BIASA-09	2			
000147	BIASA-10	2			
000148	BIASA-11	2			
000149	BIASA-12	2			
000150	BIASA-13	2			
000151	BIASA-14	2			
000152	BIASA-15	2			
000153	BIASA-16	2			
000154	BIASA-17	2			
000155	BIASA-18	2			
000156	BIASA-19	2			
000157	BIASA-20	2			
000158	BIASA-21	2			
000159	BIASA-22	2			
000160	BIASA-23	2			
000161	BIASA-24	2			
000162	BIASB-01	2			
000163	BIASB-02	2			
000164	BIASB-03	2			
000165	BIASB-04	2			
000166	BIASB-05	2			
000167	BIASB-06	2			
000168	BIASB-07	2			
000169	BIASB-08	2			
000170	BIASB-09	2			
000171	BIASB-10	2			
000172	BIASB-11	2			
000173	BIASB-12	2			
000174	BIASB-13	2			
000175	BIASB-14	2			
000176	BIASB-15	2			
000177	BIASB-16	2			
000178	BIASB-17	2			
000179	BIASB-18	2			
000180	BIASB-19	2			
000181	BIASB-20	2			
000182	BIASB-21	2			
000183	BIASB-22	2			
000184	BIASB-23	2			
000185	BIASB-24	2			
000186	BIASC-01	2			
000187	BIASC-02	2			
000188	BIASC-03	2			
000189	BIASC-04	2			
000190	BIASC-05	2			
000191	BIASC-06	2			
000192	BIASC-07	2			
000193	BIASC-08	2			
000194	BIASC-09	2			
000195	BIASC-10	2			
000196	BIASC-11	2			
000197	BIASC-12	2			
000198	BIASC-13	2			
000199	BIASC-14	2			
000200	BIASC-15	2			
000201	BIASC-16	2			
000202	BIASC-17	2			
000203	BIASC-18	2			
000204	BIASC-19	2			
000205	BIASC-20	2			
000206	BIASC-21	2			
000207	BIASC-22	2			
000208	BIASC-23	2			
000209	BIASC-24	2			
000210	BM-0.2	3			
000211	BM-0.3	3			
000212	BM-0.4	3			
000213	BM-0.5	3			

```
*****************************************************************************************************************************
*    WILLI STUDER AG   *    S I G N A L     S T A T I S T I C S          *  89/07/20  *   9:25  *   P A G E 253   *
*****************************************************************************************************************************
*                           * TAPE TRANSPORT & AUDIO MCH *                 *  89/04/19 - 00                              *
*****************************************************************************************************************************
```

SIG.NR	SIGNAL NAME	OCCUR-RENCE	COLOR	SPECIAL # * < @	#-NODE ASY GRP
000214	BM-0.6	3			
000215	BM-0.7	3			
000216	BR-FADRY	3			
000217	BR-FORW	5			
000218	BR-LOCST	3			
000219	BR-PLAY	5			
000220	BR-REC	5			
000221	BR-REW	5			
000222	BR-STOP	5			
000223	BR-VRSPD	5			
000224	CA-ADR-R	126			
000225	CA-ADR-S	126			
000226	CA-ADR-T	126			
000227	CA-ADR-U	126			
000228	CA-BAD01	2			
000229	CA-BAD02	2			
000230	CA-BAD03	2			
000231	CA-BAD04	2			
000232	CA-BAD05	2			
000233	CA-BAD06	2			
000234	CA-BAD07	2			
000235	CA-BAD08	2			
000236	CA-BAD09	2			
000237	CA-BAD10	2			
000238	CA-BAD11	2			
000239	CA-BAD12	2			
000240	CA-BAD13	2			
000241	CA-BAD14	2			
000242	CA-BAD15	2			
000243	CA-BAD16	2			
000244	CA-BAD17	2			
000245	CA-BAD18	2			
000246	CA-BAD19	2			
000247	CA-BAD20	2			
000248	CA-BAD21	2			
000249	CA-BAD22	2			
000250	CA-BAD23	2			
000251	CA-BAD24	2			
000252	CA-CHS01	6			
000253	CA-CHS02	6			
000254	CA-CHS03	6			
000255	CA-CHS04	6			
000256	CA-CHS05	6			
000257	CA-CHS06	6			
000258	CA-CHS07	6			
000259	CA-CHS08	6			
000260	CA-CHS09	6			
000261	CA-CHS10	6			
000262	CA-CHS11	6			
000263	CA-CHS12	6			
000264	CA-CHS13	6			
000265	CA-CHS14	6			
000266	CA-CHS15	6			
000267	CA-CHS16	6			
000268	CA-CHS17	6			
000269	CA-CHS18	6			
000270	CA-CHS19	6			
000271	CA-CHS20	6			
000272	CA-CHS21	6			
000273	CA-CHS22	6			
000274	CA-CHS23	6			
000275	CA-CHS24	6			
000276	CA-DATA0	126			
000277	CA-DATA1	126			
000278	CA-DATA2	126			
000279	CA-DATA3	126			
000280	CA-DATA4	126			
000281	CA-DATA5	126			
000282	CA-DATA6	126			
000283	CA-DATA7	126			
000284	CA-EQL01	2			
000285	CA-EQL02	2			
000286	CA-EQL03	2			
000287	CA-EQL04	2			
000288	CA-EQL05	2			
000289	CA-EQL06	2			
000290	CA-EQL07	2			
000291	CA-EQL08	2			
000292	CA-EQL09	2			
000293	CA-EQL10	2			
000294	CA-EQL11	2			
000295	CA-EQL12	2			
000296	CA-EQL13	2			
000297	CA-EQL14	2			
000298	CA-EQL15	2			
000299	CA-EQL16	2			
000300	CA-EQL17	2			
000301	CA-EQL18	2			
000302	CA-EQL19	2			
000303	CA-EQL20	2			
000304	CA-EQL21	2			
000305	CA-EQL22	2			
000306	CA-EQL23	2			
000307	CA-EQL24	2			
000308	CA-LSO01	2			
000309	CA-LSO02	2			
000310	CA-LSO03	2			
000311	CA-LSO04	2			
000312	CA-LSO05	2			
000313	CA-LSO06	2			
000314	CA-LSO07	2			
000315	CA-LSO08	2			
000316	CA-LSO09	2			
000317	CA-LSO10	2			
000318	CA-LSO11	2			
000319	CA-LSO12	2			
000320	CA-LSO13	2			

```
*****************************************************************************************************************************
*    WILLI STUDER AG   *    S I G N A L     S T A T I S T I C S          *  89/07/20  *   9:25  *   P A G E 254   *
*****************************************************************************************************************************
*                           * TAPE TRANSPORT & AUDIO MCH *                 *  89/04/19 - 00                              *
*****************************************************************************************************************************
```

SIG.NR	SIGNAL NAME	OCCUR-RENCE	COLOR	SPECIAL # * < @	#-NODE ASY GRP
000321	CA-LSO14	2			
000322	CA-LSO15	2			
000323	CA-LSO16	2			
000324	CA-LSO17	2			
000325	CA-LSO18	2			
000326	CA-LSO19	2			
000327	CA-LSO20	2			
000328	CA-LSO21	2			
000329	CA-LSO22	2			
000330	CA-LSO23	2			
000331	CA-LSO24	2			
000332	CA-LSW01	2			
000333	CA-LSW02	2			
000334	CA-LSW03	2			
000335	CA-LSW04	2			
000336	CA-LSW05	2			
000337	CA-LSW06	2			
000338	CA-LSW07	2			
000339	CA-LSW08	2			
000340	CA-LSW09	2			
000341	CA-LSW10	2			
000342	CA-LSW11	2			
000343	CA-LSW12	2			
000344	CA-LSW13	2			
000345	CA-LSW14	2			
000346	CA-LSW15	2			
000347	CA-LSW16	2			
000348	CA-LSW17	2			
000349	CA-LSW18	2			
000350	CA-LSW19	2			
000351	CA-LSW20	2			
000352	CA-LSW21	2			
000353	CA-LSW22	2			
000354	CA-LSW23	2			
000355	CA-LSW24	2			
000356	CA-RSW01	2			
000357	CA-RSW02	2			
000358	CA-RSW03	2			
000359	CA-RSW04	2			
000360	CA-RSW05	2			
000361	CA-RSW06	2			
000362	CA-RSW07	2			
000363	CA-RSW08	2			
000364	CA-RSW09	2			
000365	CA-RSW10	2			
000366	CA-RSW11	2			
000367	CA-RSW12	2			
000368	CA-RSW13	2			
000369	CA-RSW14	2			
000370	CA-RSW15	2			
000371	CA-RSW16	2			
000372	CA-RSW17	2			
000373	CA-RSW18	2			
000374	CA-RSW19	2			
000375	CA-RSW20	2			
000376	CA-RSW21	2			
000377	CA-RSW22	2			
000378	CA-RSW23	2			
000379	CA-RSW24	2			
000380	CA-SAF-A	5			
000381	CA-SAF-B	5			
000382	CA-SAF-C	5			
000383	CA-SAF-D	5			
000384	CA-SAF-E	5			
000385	CA-SAF-F	5			
000386	CA-SAF01	5			
000387	CA-SAF02	5			
000388	CA-SAF03	5			
000389	CA-SAF04	5			
000390	CA-SAF05	5			
000391	CA-SAF06	5			
000392	CA-SAF07	5			
000393	CA-SAF08	5			
000394	CA-SAF09	5			
000395	CA-SAF10	5			
000396	CA-SAF11	5			
000397	CA-SAF12	5			
000398	CA-SAF13	5			
000399	CA-SAF14	5			
000400	CA-SAF15	5			
000401	CA-SAF16	5			
000402	CA-SAF17	5			
000403	CA-SAF18	5			
000404	CA-SAF19	5			
000405	CA-SAF20	5			
000406	CA-SAF21	5			
000407	CA-SAF22	5			
000408	CA-SAF23	5			
000409	CA-SAF24	5			
000410	CA-SYN01	2			
000411	CA-SYN02	2			
000412	CA-SYN03	2			
000413	CA-SYN04	2			
000414	CA-SYN05	2			
000415	CA-SYN06	2			
000416	CA-SYN07	2			
000417	CA-SYN08	2			
000418	CA-SYN09	2			
000419	CA-SYN10	2			
000420	CA-SYN11	2			
000421	CA-SYN12	2			
000422	CA-SYN13	2			
000423	CA-SYN14	2			
000424	CA-SYN15	2			
000425	CA-SYN16	2			
000426	CA-SYN17	2			
000427	CA-SYN18	2			
000428	CA-SYN19	2			

```
*****************************************************************************************************************************
*    WILLI STUDER AG   *    S I G N A L    S T A T I S T I C S          *  89/07/20  *   9:25  *   P A G E 255    *
*****************************************************************************************************************************
*                              * TAPE TRANSPORT & AUDIO MCH *                *  89/04/19 - 00                              *
*****************************************************************************************************************************
```

SIG.NR	SIGNAL NAME	OCCUR-RENCE	COLOR	SPECIAL # * < @	#-NODE ASY GRP
000429	CA-SYN20	2			
000430	CA-SYN21	2			
000431	CA-SYN22	2			
000432	CA-SYN23	2			
000433	CA-SYN24	2			
000434	CA-TC-01	2			
000435	CA-TC-02	2			
000436	CA-TC-03	2			
000437	CA-TC-04	2			
000438	CA-TC-05	2			
000439	CA-TC-06	2			
000440	CA-TC-07	2			
000441	CA-TC-08	2			
000442	CA-TC-09	2			
000443	CA-TC-10	2			
000444	CA-TC-11	2			
000445	CA-TC-12	2			
000446	CA-TC-13	2			
000447	CA-TC-14	2			
000448	CA-TC-15	2			
000449	CA-TC-16	2			
000450	CA-TC-17	2			
000451	CA-TC-18	2			
000452	CA-TC-19	2			
000453	CA-TC-20	2			
000454	CA-TC-21	2			
000455	CA-TC-22	2			
000456	CA-TC-23	2			
000457	CA-TC-24	2			
000458	CD-ACT01	4			
000459	CD-ACT02	3			
000460	CD-ACT03	3			
000461	CD-ACT04	3			
000462	CD-ACT05	3			
000463	CD-ACT06	3			
000464	CD-ACT07	3			
000465	CD-ACT08	3			
000466	CD-ACT09	4			
000467	CD-ACT10	3			
000468	CD-ACT11	3			
000469	CD-ACT12	3			
000470	CD-ACT13	3			
000471	CD-ACT14	3			
000472	CD-ACT15	3			
000473	CD-ACT16	3			
000474	CD-ACT17	4			
000475	CD-ACT18	3			
000476	CD-ACT19	3			
000477	CD-ACT20	3			
000478	CD-ACT21	3			
000479	CD-ACT22	3			
000480	CD-ACT23	3			
000481	CD-ACT24	3			
000482	CD-CAL01	4			
000483	CD-CAL02	3			
000484	CD-CAL03	3			
000485	CD-CAL04	3			
000486	CD-CAL05	3			
000487	CD-CAL06	3			
000488	CD-CAL07	3			
000489	CD-CAL08	3			
000490	CD-CAL09	4			
000491	CD-CAL10	3			
000492	CD-CAL11	3			
000493	CD-CAL12	3			
000494	CD-CAL13	3			
000495	CD-CAL14	3			
000496	CD-CAL15	3			
000497	CD-CAL16	3			
000498	CD-CAL17	4			
000499	CD-CAL18	3			
000500	CD-CAL19	3			
000501	CD-CAL20	3			
000502	CD-CAL21	3			
000503	CD-CAL22	3			
000504	CD-CAL23	3			
000505	CD-CAL24	3			
000506	CD-REC01	3			
000507	CD-REC02	3			
000508	CD-REC03	3			
000509	CD-REC04	3			
000510	CD-REC05	3			
000511	CD-REC06	3			
000512	CD-REC07	3			
000513	CD-REC08	3			
000514	CD-REC09	3			
000515	CD-REC10	3			
000516	CD-REC11	3			
000517	CD-REC12	3			
000518	CD-REC13	3			
000519	CD-REC14	3			
000520	CD-REC15	3			
000521	CD-REC16	3			
000522	CD-REC17	3			
000523	CD-REC18	3			
000524	CD-REC19	3			
000525	CD-REC20	3			
000526	CD-REC21	3			
000527	CD-REC22	3			
000528	CD-REC23	3			
000529	CD-REC24	3			
000530	CD-REP01	3			
000531	CD-REP02	3			
000532	CD-REP03	3			
000533	CD-REP04	3			
000534	CD-REP05	3			
000535	CD-REP06	3			
000536	CD-REP07	3			

```
*****************************************************************************************************************************
*    WILLI STUDER AG   *    S I G N A L    S T A T I S T I C S          *  89/07/20  *   9:25  *   P A G E 256    *
*****************************************************************************************************************************
*                              * TAPE TRANSPORT & AUDIO MCH *                *  89/04/19 - 00                              *
*****************************************************************************************************************************
```

SIG.NR	SIGNAL NAME	OCCUR-RENCE	COLOR	SPECIAL # * < @	#-NODE ASY GRP
000537	CD-REP08	3			
000538	CD-REP09	3			
000539	CD-REP10	3			
000540	CD-REP11	3			
000541	CD-REP12	3			
000542	CD-REP13	3			
000543	CD-REP14	3			
000544	CD-REP15	3			
000545	CD-REP16	3			
000546	CD-REP17	3			
000547	CD-REP18	3			
000548	CD-REP19	3			
000549	CD-REP20	3			
000550	CD-REP21	3			
000551	CD-REP22	3			
000552	CD-REP23	3			
000553	CD-REP24	3			
000554	CD-SETUP	4			
000555	CPHASE-R	3	2		
000556	CPHASE-S	3	0		
000557	CPHASE-T	3	9		
000558	CVIDEO	2	9		
000559	DIRSELEC	2			
000560	DISKCHAN	2			
000561	DLBGN-01	2			
000562	DLBGN-02	2			
000563	DLBGN-03	2			
000564	DLBGN-04	2			
000565	DLBGN-05	2			
000566	DLBGN-06	2			
000567	DLBGN-07	2			
000568	DLBGN-08	2			
000569	DLBGN-09	3			
000570	DLBGN-10	3			
000571	DLBGN-11	3			
000572	DLBGN-12	3			
000573	DLBGN-13	3			
000574	DLBGN-14	3			
000575	DLBGN-15	3			
000576	DLBGN-16	3			
000577	DLBGN-17	3			
000578	DLBGN-18	3			
000579	DLBGN-19	3			
000580	DLBGN-20	3			
000581	DLBGN-21	3			
000582	DLBGN-22	3			
000583	DLBGN-23	3			
000584	DLBGN-24	3			
000585	DLBIN-01	4			
000586	DLBIN-02	3			
000587	DLBIN-03	3			
000588	DLBIN-04	3			
000589	DLBIN-05	3			
000590	DLBIN-06	3			
000591	DLBIN-07	3			
000592	DLBIN-08	3			
000593	DLBIN-09	4			
000594	DLBIN-10	3			
000595	DLBIN-11	3			
000596	DLBIN-12	3			
000597	DLBIN-13	3			
000598	DLBIN-14	3			
000599	DLBIN-15	3			
000600	DLBIN-16	3			
000601	DLBIN-17	4			
000602	DLBIN-18	3			
000603	DLBIN-19	3			
000604	DLBIN-20	3			
000605	DLBIN-21	3			
000606	DLBIN-22	3			
000607	DLBIN-23	3			
000608	DLBIN-24	3			
000609	DLBOA-01	4			
000610	DLBOA-02	3			
000611	DLBOA-03	3			
000612	DLBOA-04	3			
000613	DLBOA-05	3			
000614	DLBOA-06	3			
000615	DLBOA-07	3			
000616	DLBOA-08	3			
000617	DLBOA-09	4			
000618	DLBOA-10	3			
000619	DLBOA-11	3			
000620	DLBOA-12	3			
000621	DLBOA-13	3			
000622	DLBOA-14	3			
000623	DLBOA-15	3			
000624	DLBOA-16	3			
000625	DLBOA-17	4			
000626	DLBOA-18	3			
000627	DLBOA-19	3			
000628	DLBOA-20	3			
000629	DLBOA-21	3			
000630	DLBOA-22	3			
000631	DLBOA-23	3			
000632	DLBOA-24	3			
000633	DLBOB-01	2			
000634	DLBOB-02	2			
000635	DLBOB-03	2			
000636	DLBOB-04	2			
000637	DLBOB-05	2			
000638	DLBOB-06	2			
000639	DLBOB-07	2			
000640	DLBOB-08	2			
000641	DLBOB-09	3			
000642	DLBOB-10	3			
000643	DLBOB-11	3			

```
*    WILLI STUDER AG   *    S I G N A L     S T A T I S T I C S          * 89/07/20 *   9:25 *   P A G E 257   *
*                           * TAPE TRANSPORT & AUDIO MCH *                 * 89/04/19 - 00                      *
```

SIG.NR	SIGNAL NAME	OCCURRENCE	COLOR	SPECIAL # * < @	#-NODE ASY GRP
000644	DLBOB-12	3			
000645	DLBOB-13	3			
000646	DLBOB-14	3			
000647	DLBOB-15	3			
000648	DLBOB-16	3			
000649	DLBOB-17	3			
000650	DLBOB-18	3			
000651	DLBOB-19	3			
000652	DLBOB-20	3			
000653	DLBOB-21	3			
000654	DLBOB-22	3			
000655	DLBOB-23	3			
000656	DLBOB-24	3			
000657	DRIVESL0	2			
000658	DRIVESL1	2			
000659	DRIVESL2	2			
000660	DRIVESL3	2			
000661	EQUAL-01	2			
000662	EQUAL-02	2			
000663	EQUAL-03	2			
000664	EQUAL-04	2			
000665	EQUAL-05	2			
000666	EQUAL-06	2			
000667	EQUAL-07	2			
000668	EQUAL-08	2			
000669	EQUAL-09	2			
000670	EQUAL-10	2			
000671	EQUAL-11	2			
000672	EQUAL-12	2			
000673	EQUAL-13	2			
000674	EQUAL-14	2			
000675	EQUAL-15	2			
000676	EQUAL-16	2			
000677	EQUAL-17	2			
000678	EQUAL-18	2			
000679	EQUAL-19	2			
000680	EQUAL-20	2			
000681	EQUAL-21	2			
000682	EQUAL-22	2			
000683	EQUAL-23	2			
000684	EQUAL-24	2			
000685	ERACS-01	1			
000686	ERACS-02	1			
000687	ERACS-03	1			
000688	ERACS-04	1			
000689	ERACS-05	1			
000690	ERACS-06	1			
000691	ERACS-07	1			
000692	ERACS-08	1			
000693	ERACS-09	1			
000694	ERACS-10	1			
000695	ERACS-11	1			
000696	ERACS-12	1			
000697	ERACS-13	1			
000698	ERACS-14	1			
000699	ERACS-15	1			
000700	ERACS-16	1			
000701	ERACS-17	1			
000702	ERACS-18	1			
000703	ERACS-19	1			
000704	ERACS-20	1			
000705	ERACS-21	1			
000706	ERACS-22	1			
000707	ERACS-23	1			
000708	ERACS-24	1			
000709	ERAHH-01	3			
000710	ERAHH-02	3			
000711	ERAHH-03	3			
000712	ERAHH-04	3			
000713	ERAHH-05	3			
000714	ERAHH-06	3			
000715	ERAHH-07	3			
000716	ERAHH-08	3			
000717	ERAHH-09	3			
000718	ERAHH-10	3			
000719	ERAHH-11	3			
000720	ERAHH-12	3			
000721	ERAHH-13	3			
000722	ERAHH-14	3			
000723	ERAHH-15	3			
000724	ERAHH-16	3			
000725	ERAHH-17	3			
000726	ERAHH-18	3			
000727	ERAHH-19	3			
000728	ERAHH-20	3			
000729	ERAHH-21	3			
000730	ERAHH-22	3			
000731	ERAHH-23	3			
000732	ERAHH-24	3			
000733	ERAHL-01	3			
000734	ERAHL-02	3			
000735	ERAHL-03	3			
000736	ERAHL-04	3			
000737	ERAHL-05	3			
000738	ERAHL-06	3			
000739	ERAHL-07	3			
000740	ERAHL-08	3			
000741	ERAHL-09	3			
000742	ERAHL-10	3			
000743	ERAHL-11	3			
000744	ERAHL-12	3			
000745	ERAHL-13	3			
000746	ERAHL-14	3			
000747	ERAHL-15	3			
000748	ERAHL-16	3			
000749	ERAHL-17	3			
000750	ERAHL-18	3			

```
*    WILLI STUDER AG   *    S I G N A L     S T A T I S T I C S          * 89/07/20 *   9:25 *   P A G E 258   *
*                           * TAPE TRANSPORT & AUDIO MCH *                 * 89/04/19 - 00                      *
```

SIG.NR	SIGNAL NAME	OCCURRENCE	COLOR	SPECIAL # * < @	#-NODE ASY GRP
000751	ERAHL-19	3			
000752	ERAHL-20	3			
000753	ERAHL-21	3			
000754	ERAHL-22	3			
000755	ERAHL-23	3			
000756	ERAHL-24	3			
000757	ERAHM-01	1			
000758	ERAHM-02	1			
000759	ERAHM-03	1			
000760	ERAHM-04	1			
000761	ERAHM-05	1			
000762	ERAHM-06	1			
000763	ERAHM-07	1			
000764	ERAHM-08	1			
000765	ERAHM-09	1			
000766	ERAHM-10	1			
000767	ERAHM-11	1			
000768	ERAHM-12	1			
000769	ERAHM-13	1			
000770	ERAHM-14	1			
000771	ERAHM-15	1			
000772	ERAHM-16	1			
000773	ERAHM-17	1			
000774	ERAHM-18	1			
000775	ERAHM-19	1			
000776	ERAHM-20	1			
000777	ERAHM-21	1			
000778	ERAHM-22	1			
000779	ERAHM-23	1			
000780	ERAHM-24	1			
000781	ERAHO-01	3			
000782	ERAHO-02	3			
000783	ERAHO-03	3			
000784	ERAHO-04	3			
000785	ERAHO-05	3			
000786	ERAHO-06	3			
000787	ERAHO-07	3			
000788	ERAHO-08	3			
000789	ERAHO-09	3			
000790	ERAHO-10	3			
000791	ERAHO-11	3			
000792	ERAHO-12	3			
000793	ERAHO-13	3			
000794	ERAHO-14	3			
000795	ERAHO-15	3			
000796	ERAHO-16	3			
000797	ERAHO-17	3			
000798	ERAHO-18	3			
000799	ERAHO-19	3			
000800	ERAHO-20	3			
000801	ERAHO-21	3			
000802	ERAHO-22	3			
000803	ERAHO-23	3			
000804	ERAHO-24	3			
000805	FAD1	3			
000806	FAD2	3			
000807	FRMGND	12			
000808	GND	31			
000809	HEADSELE	2			
000810	INDEX	2			
000811	INPAD-01	2			
000812	INPAD-02	2			
000813	INPAD-03	2			
000814	INPAD-04	2			
000815	INPAD-05	2			
000816	INPAD-06	2			
000817	INPAD-07	2			
000818	INPAD-08	2			
000819	INPAD-09	2			
000820	INPAD-10	2			
000821	INPAD-11	2			
000822	INPAD-12	2			
000823	INPAD-13	2			
000824	INPAD-14	2			
000825	INPAD-15	2			
000826	INPAD-16	2			
000827	INPAD-17	2			
000828	INPAD-18	2			
000829	INPAD-19	2			
000830	INPAD-20	2			
000831	INPAD-21	2			
000832	INPAD-22	2			
000833	INPAD-23	2			
000834	INPAD-24	2			
000835	INPDI-01	2			
000836	INPDI-02	2			
000837	INPDI-03	2			
000838	INPDI-04	2			
000839	INPDI-05	2			
000840	INPDI-06	2			
000841	INPDI-07	2			
000842	INPDI-08	2			
000843	INPDI-09	2			
000844	INPDI-10	2			
000845	INPDI-11	2			
000846	INPDI-12	2			
000847	INPDI-13	2			
000848	INPDI-14	2			
000849	INPDI-15	2			
000850	INPDI-16	2			
000851	INPDI-17	2			
000852	INPDI-18	2			
000853	INPDI-19	2			
000854	INPDI-20	2			

```
*****************************************************************************************************************
*   WILLI STUDER AG   *   S I G N A L   S T A T I S T I C S          * 89/07/20 *  9:25 *  P A G E 259   *
*****************************************************************************************************************
*                          * TAPE TRANSPORT & AUDIO MCH *                 * 89/04/19 - 00                      *
*****************************************************************************************************************
```

SIG.NR	SIGNAL NAME	OCCUR-RENCE	COLOR	SPECIAL # * < @	#-NODE ASY GRP
000855	INPDI-21	2			
000856	INPDI-22	2			
000857	INPDI-23	2			
000858	INPDI-24	2			
000859	INUSE	2			
000860	IR-REFEX	5			
000861	K-BRAKEL	4			
000862	K-BRAKER	4			
000863	K-REC-01	3			
000864	K-REC-02	3			
000865	K-REC-03	3			
000866	K-REC-04	3			
000867	K-REC-05	3			
000868	K-REC-06	3			
000869	K-REC-07	3			
000870	K-REC-08	3			
000871	K-REC-09	3			
000872	K-REC-10	3			
000873	K-REC-11	3			
000874	K-REC-12	3			
000875	K-REC-13	3			
000876	K-REC-14	3			
000877	K-REC-15	3			
000878	K-REC-16	3			
000879	K-REC-17	3			
000880	K-REC-18	3			
000881	K-REC-19	3			
000882	K-REC-20	3			
000883	K-REC-21	3			
000884	K-REC-22	3			
000885	K-REC-23	3			
000886	K-REC-24	3			
000887	K-START	2	0		
000888	KCLN0-A	2			
000889	KCLN0-C	2			
000890	KCLN0-E	2			
000891	KCLN0-G	2			
000892	KCLN1-A	2			
000893	KCLN1-C	2			
000894	KCLN1-E	2			
000895	KCLN1-G	2			
000896	KCLN2-A	2			
000897	KCLN2-C	2			
000898	KCLN2-E	2			
000899	KCLN2-G	2			
000900	KCLN3-A	2			
000901	KCLN3-C	2			
000902	KCLN3-E	2			
000903	KCLN3-G	2			
000904	KCLN4-A	2			
000905	KCLN4-C	2			
000906	KCLN4-E	2			
000907	KCLN4-G	2			
000908	KCLN5-A	2			
000909	KCLN5-C	2			
000910	KCLN5-E	2			
000911	KCLN5-G	2			
000912	KCLN6-A	2			
000913	KCLN6-C	2			
000914	KCLN6-E	2			
000915	KCLN6-G	2			
000916	KCLN7-A	2			
000917	KCLN7-C	2			
000918	KCLN7-E	2			
000919	KCLN7-G	2			
000920	KEY/CDIR	2			
000921	KRW0-A	2			
000922	KRW0-C	2			
000923	KRW0-E	2			
000924	KRW0-G	2			
000925	KRW1-A	2			
000926	KRW1-C	2			
000927	KRW1-E	2			
000928	KRW1-G	2			
000929	KRW2-A	2			
000930	KRW2-C	2			
000931	KRW2-E	2			
000932	KRW2-G	2			
000933	KRW3-A	2			
000934	KRW3-C	2			
000935	KRW3-E	2			
000936	KRW3-G	2			
000937	KRW4-A	2			
000938	KRW4-C	2			
000939	KRW4-E	2			
000940	KRW4-G	2			
000941	LCU-A	1	2		
000942	LCU-B	1	3		
000943	LDCLN0-A	2			
000944	LDCLN0-C	2			
000945	LDCLN0-E	2			
000946	LDCLN0-G	2			
000947	LDCLN1-A	2			
000948	LDCLN1-C	2			
000949	LDCLN1-E	2			
000950	LDCLN1-G	2			
000951	LDCLN2-A	2			
000952	LDCLN2-C	2			
000953	LDCLN2-E	2			
000954	LDCLN2-G	2			
000955	LDCLN3-A	2			
000956	LDCLN3-C	2			
000957	LDCLN3-E	2			
000958	LDCLN3-G	2			
000959	LDCLN4-A	2			
000960	LDCLN4-C	2			

```
*****************************************************************************************************************
*   WILLI STUDER AG   *   S I G N A L   S T A T I S T I C S          * 89/07/20 *  9:25 *  P A G E 260   *
*****************************************************************************************************************
*                          * TAPE TRANSPORT & AUDIO MCH *                 * 89/04/19 - 00                      *
*****************************************************************************************************************
```

SIG.NR	SIGNAL NAME	OCCUR-RENCE	COLOR	SPECIAL # * < @	#-NODE ASY GRP
000961	LDCLN4-E	2			
000962	LDCLN4-G	2			
000963	LDCLN5-A	2			
000964	LDCLN5-C	2			
000965	LDCLN5-E	2			
000966	LDCLN5-G	2			
000967	LDCLN6-A	2			
000968	LDCLN6-C	2			
000969	LDCLN6-E	2			
000970	LDCLN6-G	2			
000971	LDCLN7-A	2			
000972	LDCLN7-C	2			
000973	LDCLN7-E	2			
000974	LDCLN7-G	2			
000975	LDRW0-A	2			
000976	LDRW0-C	2			
000977	LDRW0-E	2			
000978	LDRW0-G	2			
000979	LDRW1-A	2			
000980	LDRW1-C	2			
000981	LDRW1-E	2			
000982	LDRW1-G	2			
000983	LDRW2-A	2			
000984	LDRW2-C	2			
000985	LDRW2-E	2			
000986	LDRW2-G	2			
000987	LDRW3-A	2			
000988	LDRW3-C	2			
000989	LDRW3-E	2			
000990	LDRW3-G	2			
000991	LDRW4-A	2			
000992	LDRW4-C	2			
000993	LDRW4-E	2			
000994	LDRW4-G	2			
000995	LDRW5-A	2			
000996	LDRW5-C	2			
000997	LDRW5-E	2			
000998	LDRW5-G	2			
000999	LINE1	2	1		
001000	LINE2	2	6		
001001	LINFA-01	3			
001002	LINFA-02	3			
001003	LINFA-03	3			
001004	LINFA-04	3			
001005	LINFA-05	3			
001006	LINFA-06	3			
001007	LINFA-07	3			
001008	LINFA-08	3			
001009	LINFA-09	3			
001010	LINFA-10	3			
001011	LINFA-11	3			
001012	LINFA-12	3			
001013	LINFA-13	3			
001014	LINFA-14	3			
001015	LINFA-15	3			
001016	LINFA-16	3			
001017	LINFA-17	3			
001018	LINFA-18	3			
001019	LINFA-19	3			
001020	LINFA-20	3			
001021	LINFA-21	3			
001022	LINFA-22	3			
001023	LINFA-23	3			
001024	LINFA-24	3			
001025	LINFB-01	3			
001026	LINFB-02	3			
001027	LINFB-03	3			
001028	LINFB-04	3			
001029	LINFB-05	3			
001030	LINFB-06	3			
001031	LINFB-07	3			
001032	LINFB-08	3			
001033	LINFB-09	3			
001034	LINFB-10	3			
001035	LINFB-11	3			
001036	LINFB-12	3			
001037	LINFB-13	3			
001038	LINFB-14	3			
001039	LINFB-15	3			
001040	LINFB-16	3			
001041	LINFB-17	3			
001042	LINFB-18	3			
001043	LINFB-19	3			
001044	LINFB-20	3			
001045	LINFB-21	3			
001046	LINFB-22	3			
001047	LINFB-23	3			
001048	LINFB-24	3			
001049	LINSA-01	1			
001050	LINSA-02	1			
001051	LINSA-03	1			
001052	LINSA-04	1			
001053	LINSA-05	1			
001054	LINSA-06	1			
001055	LINSA-07	1			
001056	LINSA-08	1			
001057	LINSA-09	1			
001058	LINSA-10	1			
001059	LINSA-11	1			
001060	LINSA-12	1			
001061	LINSA-13	1			
001062	LINSA-14	1			
001063	LINSA-15	1			
001064	LINSA-16	1			
001065	LINSA-17	1			
001066	LINSA-18	1			
001067	LINSA-19	1			
001068	LINSA-20	1			

```
*****************************************************************************************************************************
*    WILLI STUDER AG   *    S I G N A L     S T A T I S T I C S          * 89/07/20 *   9:25 *   P A G E 261   *
*****************************************************************************************************************************
*                                  * TAPE TRANSPORT & AUDIO MCH *                 * 89/04/19 - 00                          *
*****************************************************************************************************************************
```

SIG.NR	SIGNAL NAME	OCCUR-RENCE	COLOR	SPECIAL # * < @	#-NODE ASY GRP
001069	LINSA-21	1			
001070	LINSA-22	1			
001071	LINSA-23	1			
001072	LINSA-24	1			
001073	LINSB-01	1			
001074	LINSB-02	1			
001075	LINSB-03	1			
001076	LINSB-04	1			
001077	LINSB-05	1			
001078	LINSB-06	1			
001079	LINSB-07	1			
001080	LINSB-08	1			
001081	LINSB-09	1			
001082	LINSB-10	1			
001083	LINSB-11	1			
001084	LINSB-12	1			
001085	LINSB-13	1			
001086	LINSB-14	1			
001087	LINSB-15	1			
001088	LINSB-16	1			
001089	LINSB-17	1			
001090	LINSB-18	1			
001091	LINSB-19	1			
001092	LINSB-20	1			
001093	LINSB-21	1			
001094	LINSB-22	1			
001095	LINSB-23	1			
001096	LINSB-24	1			
001097	LOUFA-01	3			
001098	LOUFA-02	3			
001099	LOUFA-03	3			
001100	LOUFA-04	3			
001101	LOUFA-05	3			
001102	LOUFA-06	3			
001103	LOUFA-07	3			
001104	LOUFA-08	3			
001105	LOUFA-09	3			
001106	LOUFA-10	3			
001107	LOUFA-11	3			
001108	LOUFA-12	3			
001109	LOUFA-13	3			
001110	LOUFA-14	3			
001111	LOUFA-15	3			
001112	LOUFA-16	3			
001113	LOUFA-17	3			
001114	LOUFA-18	3			
001115	LOUFA-19	3			
001116	LOUFA-20	3			
001117	LOUFA-21	3			
001118	LOUFA-22	3			
001119	LOUFA-23	3			
001120	LOUFA-24	3			
001121	LOUFB-01	3			
001122	LOUFB-02	3			
001123	LOUFB-03	3			
001124	LOUFB-04	3			
001125	LOUFB-05	3			
001126	LOUFB-06	3			
001127	LOUFB-07	3			
001128	LOUFB-08	3			
001129	LOUFB-09	3			
001130	LOUFB-10	3			
001131	LOUFB-11	3			
001132	LOUFB-12	3			
001133	LOUFB-13	3			
001134	LOUFB-14	3			
001135	LOUFB-15	3			
001136	LOUFB-16	3			
001137	LOUFB-17	3			
001138	LOUFB-18	3			
001139	LOUFB-19	3			
001140	LOUFB-20	3			
001141	LOUFB-21	3			
001142	LOUFB-22	3			
001143	LOUFB-23	3			
001144	LOUFB-24	3			
001145	LOUSA-01	1			
001146	LOUSA-02	1			
001147	LOUSA-03	1			
001148	LOUSA-04	1			
001149	LOUSA-05	1			
001150	LOUSA-06	1			
001151	LOUSA-07	1			
001152	LOUSA-08	1			
001153	LOUSA-09	1			
001154	LOUSA-10	1			
001155	LOUSA-11	1			
001156	LOUSA-12	1			
001157	LOUSA-13	1			
001158	LOUSA-14	1			
001159	LOUSA-15	1			
001160	LOUSA-16	1			
001161	LOUSA-17	1			
001162	LOUSA-18	1			
001163	LOUSA-19	1			
001164	LOUSA-20	1			
001165	LOUSA-21	1			
001166	LOUSA-22	1			
001167	LOUSA-23	1			
001168	LOUSA-24	1			
001169	LOUSB-01	1			
001170	LOUSB-02	1			
001171	LOUSB-03	1			
001172	LOUSB-04	1			
001173	LOUSB-05	1			
001174	LOUSB-06	1			
001175	LOUSB-07	1			
001176	LOUSB-08	1			

```
*****************************************************************************************************************************
*    WILLI STUDER AG   *    S I G N A L     S T A T I S T I C S          * 89/07/20 *   9:25 *   P A G E 262   *
*****************************************************************************************************************************
*                                  * TAPE TRANSPORT & AUDIO MCH *                 * 89/04/19 - 00                          *
*****************************************************************************************************************************
```

SIG.NR	SIGNAL NAME	OCCUR-RENCE	COLOR	SPECIAL # * < @	#-NODE ASY GRP
001177	LOUSB-09	1			
001178	LOUSB-10	1			
001179	LOUSB-11	1			
001180	LOUSB-12	1			
001181	LOUSB-13	1			
001182	LOUSB-14	1			
001183	LOUSB-15	1			
001184	LOUSB-16	1			
001185	LOUSB-17	1			
001186	LOUSB-18	1			
001187	LOUSB-19	1			
001188	LOUSB-20	1			
001189	LOUSB-21	1			
001190	LOUSB-22	1			
001191	LOUSB-23	1			
001192	LOUSB-24	1			
001193	M-FREC	1	2		
001194	M-MOVE1	1	5		
001195	M-MOVE2L	1	8		
001196	M-PLAY	1	7		
001197	M-REC	1	6		
001198	M-STOP	1	3		
001199	M-TPILOT	1	4		
001200	MBCR	1	9		
001201	MBCS	1	4		
001202	MONIT-01	2			
001203	MONIT-02	2			
001204	MONIT-03	2			
001205	MONIT-04	2			
001206	MONIT-05	2			
001207	MONIT-06	2			
001208	MONIT-07	2			
001209	MONIT-08	2			
001210	MONIT-09	2			
001211	MONIT-10	2			
001212	MONIT-11	2			
001213	MONIT-12	2			
001214	MONIT-13	2			
001215	MONIT-14	2			
001216	MONIT-15	2			
001217	MONIT-16	2			
001218	MONIT-17	2			
001219	MONIT-18	2			
001220	MONIT-19	2			
001221	MONIT-20	2			
001222	MONIT-21	2			
001223	MONIT-22	2			
001224	MONIT-23	2			
001225	MONIT-24	2			
001226	MOTORON	2			
001227	MTC1A	3	6		
001228	MTC1B	3	9		
001229	OC-RES 1	1			
001230	OC-RES 2	1			
001231	OC-RES 3	1			
001232	OC-RES 4	1			
001233	OR-CMCLK	2			
001234	OR-MVCLK	2			
001235	OR-MVDIR	2			
001236	OR-SYENB	2			
001237	PNLBUS1	21			
001238	PNLBUS2	21			
001239	PWMPL-H1	3			
001240	PWMPL-H2	3			
001241	PWMPL-L1	3			
001242	PWMPL-L2	2			
001243	PWMPL-L3	3			
001244	PWMPL-L4	3			
001245	PWMPL-L5	3			
001246	PWMPL-L6	3			
001247	PWMPR-H1	5			
001248	PWMPR-H2	5			
001249	PWMPR-L1	5			
001250	PWMPR-L2	4			
001251	PWMPR-L3	5			
001252	PWMPR-L4	5			
001253	PWMPR-L5	5			
001254	PWMPR-L6	5			
001255	RCV-232	1			
001256	READDATA	2			
001257	READY	1			
001258	RECEIVA	6			
001259	RECEIVB	6			
001260	RECEIVCM	6			
001261	RECHH-01	3	1		
001262	RECHH-02	3	1		
001263	RECHH-03	3	1		
001264	RECHH-04	3	1		
001265	RECHH-05	3	1		
001266	RECHH-06	3	1		
001267	RECHH-07	3	1		
001268	RECHH-08	3	1		
001269	RECHH-09	3	1		
001270	RECHH-10	3	1		
001271	RECHH-11	3	1		
001272	RECHH-12	3	1		
001273	RECHH-13	3	1		
001274	RECHH-14	3	1		
001275	RECHH-15	3	1		
001276	RECHH-16	3	1		
001277	RECHH-17	3	1		
001278	RECHH-18	3	1		
001279	RECHH-19	3	1		
001280	RECHH-20	3	1		

```
*    WILLI STUDER AG    *    S I G N A L    S T A T I S T I C S          * 89/07/20  *   9:25  *   P A G E 263    *
*                            * TAPE TRANSPORT & AUDIO MCH *                 * 89/04/19 - 00                        *
```

SIG.NR	SIGNAL NAME	OCCURRENCE	COLOR	SPECIAL # * < @	#-NODE ASY GRP
001281	RECHH-21	3	1		
001282	RECHH-22	3	1		
001283	RECHH-23	3	1		
001284	RECHH-24	3	1		
001285	RECHL-01	3	0		
001286	RECHL-02	3	0		
001287	RECHL-03	3	0		
001288	RECHL-04	3	0		
001289	RECHL-05	3	0		
001290	RECHL-06	3	0		
001291	RECHL-07	3	0		
001292	RECHL-08	3	0		
001293	RECHL-09	3	0		
001294	RECHL-10	3	0		
001295	RECHL-11	3	0		
001296	RECHL-12	3	0		
001297	RECHL-13	3	0		
001298	RECHL-14	3	0		
001299	RECHL-15	3	0		
001300	RECHL-16	3	0		
001301	RECHL-17	3	0		
001302	RECHL-18	3	0		
001303	RECHL-19	3	0		
001304	RECHL-20	3	0		
001305	RECHL-21	3	0		
001306	RECHL-22	3	0		
001307	RECHL-23	3	0		
001308	RECHL-24	3	0		
001309	RECIN-01	3			
001310	RECIN-02	3			
001311	RECIN-03	3			
001312	RECIN-04	3			
001313	RECIN-05	3			
001314	RECIN-06	3			
001315	RECIN-07	3			
001316	RECIN-08	3			
001317	RECIN-09	3			
001318	RECIN-10	3			
001319	RECIN-11	3			
001320	RECIN-12	3			
001321	RECIN-13	3			
001322	RECIN-14	3			
001323	RECIN-15	3			
001324	RECIN-16	3			
001325	RECIN-17	3			
001326	RECIN-18	3			
001327	RECIN-19	3			
001328	RECIN-20	3			
001329	RECIN-21	3			
001330	RECIN-22	3			
001331	RECIN-23	3			
001332	RECIN-24	3			
001333	REFLEV	38			
001334	REPHH-01	2	1		
001335	REPHH-02	2	1		
001336	REPHH-03	2	1		
001337	REPHH-04	2	1		
001338	REPHH-05	2	1		
001339	REPHH-06	2	1		
001340	REPHH-07	2	1		
001341	REPHH-08	2	1		
001342	REPHH-09	2	1		
001343	REPHH-10	2	1		
001344	REPHH-11	2	1		
001345	REPHH-12	2	1		
001346	REPHH-13	2	1		
001347	REPHH-14	2	1		
001348	REPHH-15	2	1		
001349	REPHH-16	2	1		
001350	REPHH-17	2	1		
001351	REPHH-18	2	1		
001352	REPHH-19	2	1		
001353	REPHH-20	2	1		
001354	REPHH-21	2	1		
001355	REPHH-22	2	1		
001356	REPHH-23	2	1		
001357	REPHH-24	2	1		
001358	REPHL-01	2	0		
001359	REPHL-02	2	0		
001360	REPHL-03	2	0		
001361	REPHL-04	2	0		
001362	REPHL-05	2	0		
001363	REPHL-06	2	0		
001364	REPHL-07	2	0		
001365	REPHL-08	2	0		
001366	REPHL-09	2	0		
001367	REPHL-10	2	0		
001368	REPHL-11	2	0		
001369	REPHL-12	2	0		
001370	REPHL-13	2	0		
001371	REPHL-14	2	0		
001372	REPHL-15	2	0		
001373	REPHL-16	2	0		
001374	REPHL-17	2	0		
001375	REPHL-18	2	0		
001376	REPHL-19	2	0		
001377	REPHL-20	2	0		
001378	REPHL-21	2	0		
001379	REPHL-22	2	0		
001380	REPHL-23	2	0		
001381	REPHL-24	2	0		
001382	REPRE-01	3			
001383	REPRE-02	3			
001384	REPRE-03	3			
001385	REPRE-04	3			
001386	REPRE-05	3			
001387	REPRE-06	3			
001388	REPRE-07	3			

```
*    WILLI STUDER AG    *    S I G N A L    S T A T I S T I C S          * 89/07/20  *   9:25  *   P A G E 264    *
*                            * TAPE TRANSPORT & AUDIO MCH *                 * 89/04/19 - 00                        *
```

SIG.NR	SIGNAL NAME	OCCURRENCE	COLOR	SPECIAL # * < @	#-NODE ASY GRP
001389	REPRE-08	3			
001390	REPRE-09	3			
001391	REPRE-10	3			
001392	REPRE-11	3			
001393	REPRE-12	3			
001394	REPRE-13	3			
001395	REPRE-14	3			
001396	REPRE-15	3			
001397	REPRE-16	3			
001398	REPRE-17	3			
001399	REPRE-18	3			
001400	REPRE-19	3			
001401	REPRE-20	3			
001402	REPRE-21	3			
001403	REPRE-22	3			
001404	REPRE-23	3			
001405	REPRE-24	3			
001406	REPRO-01	3			
001407	REPRO-02	3			
001408	REPRO-03	3			
001409	REPRO-04	3			
001410	REPRO-05	3			
001411	REPRO-06	3			
001412	REPRO-07	3			
001413	REPRO-08	3			
001414	REPRO-09	3			
001415	REPRO-10	3			
001416	REPRO-11	3			
001417	REPRO-12	3			
001418	REPRO-13	3			
001419	REPRO-14	3			
001420	REPRO-15	3			
001421	REPRO-16	3			
001422	REPRO-17	3			
001423	REPRO-18	3			
001424	REPRO-19	3			
001425	REPRO-20	3			
001426	REPRO-21	3			
001427	REPRO-22	3			
001428	REPRO-23	3			
001429	REPRO-24	3			
001430	RESERVE	24			
001431	RESERVE1	5	3		
001432	RESERVE2	5	0		
001433	RESERVE3	4			
001434	S-A1N-A	1			
001435	S-A1N-AB	2			
001436	S-A1N-B	1			
001437	S-A1N-C	1			
001438	S-A1N-CD	2			
001439	S-A1N-D	1			
001440	S-A1N-E	1			
001441	S-A1N-EF	2			
001442	S-A1N-F	1			
001443	S-A1P-A	2			
001444	S-A1P-B	2			
001445	S-A1P-C	2			
001446	S-A1P-D	2			
001447	S-A1P-E	2			
001448	S-A1P-F	2			
001449	S-ENABLE	1	8		
001450	SBCR	1	9		
001451	SBCS	1	4		
001452	SGNGND	30			
001453	SHIELD	10	5		
001454	SIGN.GND	2			
001455	SND-232	1			
001456	SPARE	5			
001457	SR-FADRY	3			
001458	SR-FORW	5			
001459	SR-LIFT	5			
001460	SR-LOCST	3			
001461	SR-MUTE	2			
001462	SR-PLAY	7			
001463	SR-REC	7			
001464	SR-REHSL	2			
001465	SR-RESET	3			
001466	SR-REW	5			
001467	SR-STOP	5			
001468	SR-VRSPD	5			
001469	SR-OLOC	3			
001470	STC1A	2	6		
001471	STC1B	2	9		
001472	STEP	2			
001473	SYNHH-01	2			
001474	SYNHH-02	2			
001475	SYNHH-03	2			
001476	SYNHH-04	2			
001477	SYNHH-05	2			
001478	SYNHH-06	2			
001479	SYNHH-07	2			
001480	SYNHH-08	2			
001481	SYNHH-09	2			
001482	SYNHH-10	2			
001483	SYNHH-11	2			
001484	SYNHH-12	2			
001485	SYNHH-13	2			
001486	SYNHH-14	2			
001487	SYNHH-15	2			
001488	SYNHH-16	2			
001489	SYNHH-17	2			
001490	SYNHH-18	2			
001491	SYNHH-19	2			
001492	SYNHH-20	2			
001493	SYNHH-21	2			
001494	SYNHH-22	2			
001495	SYNHH-23	2			

```
*****************************************************************************************************************************
*   WILLI STUDER AG   *   S I G N A L   S T A T I S T I C S          * 89/07/20 *  9:25 *  P A G E 265  *
*****************************************************************************************************************************
*                          * TAPE TRANSPORT & AUDIO MCH *                 * 89/04/19 - 00                                  *
*****************************************************************************************************************************
```

SIG.NR	SIGNAL NAME	OCCURRENCE	COLOR	SPECIAL # * < @	#-NODE ASY GRP
001496	SYNHH-24	2			
001497	SYNHL-01	2			
001498	SYNHL-02	2			
001499	SYNHL-03	2			
001500	SYNHL-04	2			
001501	SYNHL-05	2			
001502	SYNHL-06	2			
001503	SYNHL-07	2			
001504	SYNHL-08	2			
001505	SYNHL-09	2			
001506	SYNHL-10	2			
001507	SYNHL-11	2			
001508	SYNHL-12	2			
001509	SYNHL-13	2			
001510	SYNHL-14	2			
001511	SYNHL-15	2			
001512	SYNHL-16	2			
001513	SYNHL-17	2			
001514	SYNHL-18	2			
001515	SYNHL-19	2			
001516	SYNHL-20	2			
001517	SYNHL-21	2			
001518	SYNHL-22	2			
001519	SYNHL-23	2			
001520	SYNHL-24	2			
001521	SYPRE-01	1			
001522	SYPRE-02	1			
001523	SYPRE-03	1			
001524	SYPRE-04	1			
001525	SYPRE-05	1			
001526	SYPRE-06	1			
001527	SYPRE-07	1			
001528	SYPRE-08	1			
001529	SYPRE-09	1			
001530	SYPRE-10	1			
001531	SYPRE-11	1			
001532	SYPRE-12	1			
001533	SYPRE-13	1			
001534	SYPRE-14	1			
001535	SYPRE-15	1			
001536	SYPRE-16	1			
001537	SYPRE-17	1			
001538	SYPRE-18	1			
001539	SYPRE-19	1			
001540	SYPRE-20	1			
001541	SYPRE-21	1			
001542	SYPRE-22	1			
001543	SYPRE-23	1			
001544	SYPRE-24	1			
001545	SYS-CTS	2			
001546	SYS-DTR	2			
001547	SYS-RX	2			
001548	SYS-TX	2			
001549	T-A0	2			
001550	T-A0N-AB	8			
001551	T-A0N-CD	8			
001552	T-A0N-EF	8			
001553	T-A0P-AB	8			
001554	T-A0P-CD	8			
001555	T-A0P-EF	8			
001556	T-A1	2			
001557	T-A1N-AB	8			
001558	T-A1N-CD	8			
001559	T-A1N-EF	8			
001560	T-A1P-AB	10			
001561	T-A1P-CD	10			
001562	T-A1P-EF	10			
001563	T-A2	2			
001564	T-A3	2			
001565	T-BD	2			
001566	T-B0	2			
001567	T-B1	2			
001568	T-B2	2			
001569	T-B3	2			
001570	T-B6D0	4			
001571	T-B6D1	4			
001572	T-B6D2	4			
001573	T-B6D3	4			
001574	T-B6D4	4			
001575	T-B6D5	4			
001576	T-B6D6	4			
001577	T-B6D7	4			
001578	T-B6SL1	4			
001579	T-B6SL2	4			
001580	T-B6SL3	4			
001581	T-B6WR	4			
001582	T-CLN-AB	4			
001583	T-CLN-CD	4			
001584	T-CLN-EF	4			
001585	T-CLP-AB	4			
001586	T-CLP-CD	4			
001587	T-CLP-EF	4			
001588	T-DENB	2			
001589	T-DRESET	2			
001590	T-DT-CH1	5			
001591	T-DT-CH2	5			
001592	T-DT-CH3	5			
001593	T-DT-MP	7			
001594	T-DT-RES	5			
001595	T-DT-RP1	3			
001596	T-DT-RP2	3			
001597	T-DT-SJM	3			
001598	T-DTO-AB	8			
001599	T-DTO-CD	8			
001600	T-DTO-EF	8			
001601	T-DT1-AB	8			
001602	T-DT1-CD	8			

```
*****************************************************************************************************************************
*   WILLI STUDER AG   *   S I G N A L   S T A T I S T I C S          * 89/07/20 *  9:25 *  P A G E 266  *
*****************************************************************************************************************************
*                          * TAPE TRANSPORT & AUDIO MCH *                 * 89/04/19 - 00                                  *
*****************************************************************************************************************************
```

SIG.NR	SIGNAL NAME	OCCURRENCE	COLOR	SPECIAL # * < @	#-NODE ASY GRP
001603	T-DT1-EF	8			
001604	T-DT2-AB	8			
001605	T-DT2-CD	8			
001606	T-DT2-EF	8			
001607	T-DT3-AB	8			
001608	T-DT3-CD	8			
001609	T-DT3-EF	8			
001610	T-DT4-AB	8			
001611	T-DT4-CD	8			
001612	T-DT4-EF	8			
001613	T-DT5-AB	8			
001614	T-DT5-CD	8			
001615	T-DT5-EF	8			
001616	T-DT6-AB	8			
001617	T-DT6-CD	8			
001618	T-DT6-EF	8			
001619	T-DT7-AB	8			
001620	T-DT7-CD	8			
001621	T-DT7-EF	8			
001622	T-IRES 2	1			
001623	T-IRES 3	1			
001624	T-IRES 4	1			
001625	T-KBA0	7			
001626	T-KBA1	7			
001627	T-KBA2	7			
001628	T-KBD0	9			
001629	T-KBD1	9			
001630	T-KBD2	9			
001631	T-KBD3	9			
001632	T-KBD4	9			
001633	T-KBD5	9			
001634	T-KBD6	9			
001635	T-KBD7	9			
001636	T-KBSL1	4			
001637	T-KBSL2	4			
001638	T-KBSL3	4			
001639	T-KBSL4	3			
001640	T-KBSL5	3			
001641	T-KBWR	9			
001642	T-MOD1	4			
001643	T-MOD2	4			
001644	T-MOD3	4			
001645	T-MOD4	3			
001646	T-MOD5	3			
001647	T-MOD6	2			
001648	T-MOD7	2			
001649	T-OE	2			
001650	T-PWRON	19			
001651	T-READSL	7			
001652	T-REFEXT	4			
001653	T-REFINT	2			
001654	T-RESET	2			
001655	T-RL0	2			
001656	T-RL1	2			
001657	T-RL2	2			
001658	T-RL3	2			
001659	T-RL4	2			
001660	T-RL5	2			
001661	T-RL6	2			
001662	T-RL7	2			
001663	T-RWN-AB	8			
001664	T-RWN-CD	8			
001665	T-RWN-EF	8			
001666	T-RWP-AB	8			
001667	T-RWP-CD	8			
001668	T-RWP-EF	8			
001669	T-SADA	7			
001670	T-SADB	7			
001671	T-SADC	7			
001672	T-SL-AB	8			
001673	T-SL-CD	8			
001674	T-SL-EF	8			
001675	T-SL0	2			
001676	T-SL1	2			
001677	T-SL2	2			
001678	T-SL3	2			
001679	T-SPDSL1	1			
001680	T-SPDSL2	1			
001681	T-SUPVON	3			
001682	T-VARSPD	1			
001683	T-WRTSL	7			
001684	TA-ACT01	5			
001685	TA-ACT02	5			
001686	TA-ACT03	5			
001687	TA-ACT04	5			
001688	TA-ACT05	5			
001689	TA-ACT06	5			
001690	TA-ACT07	5			
001691	TA-ACT08	5			
001692	TA-ACT09	5			
001693	TA-ACT10	5			
001694	TA-ACT11	5			
001695	TA-ACT12	5			
001696	TA-ACT13	5			
001697	TA-ACT14	5			
001698	TA-ACT15	5			
001699	TA-ACT16	5			
001700	TA-ACT17	5			
001701	TA-ACT18	5			
001702	TA-ACT19	5			
001703	TA-ACT20	5			
001704	TA-ACT21	5			
001705	TA-ACT22	5			
001706	TA-ACT23	5			
001707	TA-ACT24	5			
001708	TA-ADR0	11			
001709	TA-ADR1	11			
001710	TA-ADR2	11			

```
*****************************************************************************************************************************
*    WILLI STUDER AG    *    S I G N A L     S T A T I S T I C S            *  89/07/20  *   9:25  *   P A G E 267    *
*****************************************************************************************************************************
*                            * TAPE TRANSPORT & AUDIO MCH *                  *  89/04/19 - 00                            *
*****************************************************************************************************************************
```

SIG.NR	SIGNAL NAME	OCCUR-RENCE	COLOR	SPECIAL # * < @	#-NODE ASY GRP
001711	TA-ADR3	7			
001712	TA-AUIR	2			
001713	TA-CLMAB	4			
001714	TA-CLMCD	4			
001715	TA-CLMEF	4			
001716	TA-CLPAB	4			
001717	TA-CLPCD	4			
001718	TA-CLPEF	4			
001719	TA-CMP01	2			
001720	TA-CMP02	2			
001721	TA-CMP03	2			
001722	TA-CMP04	2			
001723	TA-CMP05	2			
001724	TA-CMP06	2			
001725	TA-CMP07	2			
001726	TA-CMP08	2			
001727	TA-CMP09	2			
001728	TA-CMP10	2			
001729	TA-CMP11	2			
001730	TA-CMP12	2			
001731	TA-CMP13	2			
001732	TA-CMP14	2			
001733	TA-CMP15	2			
001734	TA-CMP16	2			
001735	TA-CMP17	2			
001736	TA-CMP18	2			
001737	TA-CMP19	2			
001738	TA-CMP20	2			
001739	TA-CMP21	2			
001740	TA-CMP22	2			
001741	TA-CMP23	2			
001742	TA-CMP24	2			
001743	TA-C307K	126			
001744	TA-C614K	4			
001745	TA-C76K	2			
001746	TA-DATA0	11			
001747	TA-DATA1	11			
001748	TA-DATA2	11			
001749	TA-DATA3	11			
001750	TA-DATA4	11			
001751	TA-DATA5	11			
001752	TA-DATA6	11			
001753	TA-DATA7	11			
001754	TA-DRENB	2			
001755	TA-ENB	11			
001756	TA-IRQ	4			
001757	TA-NMI	2			
001758	TA-OUTP0	5			
001759	TA-RESET	4			
001760	TA-RESMP	7			
001761	TA-RW	11			
001762	TA-RX	4			
001763	TA-SL2	5			
001764	TA-SL3	3			
001765	TA-SL4	4			
001766	TA-SL5	2			
001767	TA-SL6	4			
001768	TA-SL7	4			
001769	TA-TX	4			
001770	TAD-RESA	4			
001771	TAD-RESB	4			
001772	TAD-RESC	4			
001773	TAPAD-01	2			
001774	TAPAD-02	2			
001775	TAPAD-03	2			
001776	TAPAD-04	2			
001777	TAPAD-05	2			
001778	TAPAD-06	2			
001779	TAPAD-07	2			
001780	TAPAD-08	2			
001781	TAPAD-09	2			
001782	TAPAD-10	2			
001783	TAPAD-11	2			
001784	TAPAD-12	2			
001785	TAPAD-13	2			
001786	TAPAD-14	2			
001787	TAPAD-15	2			
001788	TAPAD-16	2			
001789	TAPAD-17	2			
001790	TAPAD-18	2			
001791	TAPAD-19	2			
001792	TAPAD-20	2			
001793	TAPAD-21	2			
001794	TAPAD-22	2			
001795	TAPAD-23	2			
001796	TAPAD-24	2			
001797	TAPDI-01	3			
001798	TAPDI-02	3			
001799	TAPDI-03	3			
001800	TAPDI-04	3			
001801	TAPDI-05	3			
001802	TAPDI-06	3			
001803	TAPDI-07	3			
001804	TAPDI-08	3			
001805	TAPDI-09	3			
001806	TAPDI-10	3			
001807	TAPDI-11	3			
001808	TAPDI-12	3			
001809	TAPDI-13	3			
001810	TAPDI-14	3			
001811	TAPDI-15	3			
001812	TAPDI-16	3			
001813	TAPDI-17	3			
001814	TAPDI-18	3			
001815	TAPDI-19	3			
001816	TAPDI-20	3			
001817	TAPDI-21	3			
001818	TAPDI-22	3			

```
*****************************************************************************************************************************
*    WILLI STUDER AG    *    S I G N A L     S T A T I S T I C S            *  89/07/20  *   9:25  *   P A G E 268    *
*****************************************************************************************************************************
*                            * TAPE TRANSPORT & AUDIO MCH *                  *  89/04/19 - 00                            *
*****************************************************************************************************************************
```

SIG.NR	SIGNAL NAME	OCCUR-RENCE	COLOR	SPECIAL # * < @	#-NODE ASY GRP
001819	TAPDI-23	3			
001820	TAPDI-24	3			
001821	TAPLI-01	1			
001822	TAPLI-02	1			
001823	TAPLI-03	1			
001824	TAPLI-04	1			
001825	TAPLI-05	1			
001826	TAPLI-06	1			
001827	TAPLI-07	1			
001828	TAPLI-08	1			
001829	TAPLI-09	1			
001830	TAPLI-10	1			
001831	TAPLI-11	1			
001832	TAPLI-12	1			
001833	TAPLI-13	1			
001834	TAPLI-14	1			
001835	TAPLI-15	1			
001836	TAPLI-16	1			
001837	TAPLI-17	1			
001838	TAPLI-18	1			
001839	TAPLI-19	1			
001840	TAPLI-20	1			
001841	TAPLI-21	1			
001842	TAPLI-22	1			
001843	TAPLI-23	1			
001844	TAPLI-24	1			
001845	TAPMS-01	1			
001846	TAPMS-02	1			
001847	TAPMS-03	1			
001848	TAPMS-04	1			
001849	TAPMS-05	1			
001850	TAPMS-06	1			
001851	TAPMS-07	1			
001852	TAPMS-08	1			
001853	TAPMS-09	1			
001854	TAPMS-10	1			
001855	TAPMS-11	1			
001856	TAPMS-12	1			
001857	TAPMS-13	1			
001858	TAPMS-14	1			
001859	TAPMS-15	1			
001860	TAPMS-16	1			
001861	TAPMS-17	1			
001862	TAPMS-18	1			
001863	TAPMS-19	1			
001864	TAPMS-20	1			
001865	TAPMS-21	1			
001866	TAPMS-22	1			
001867	TAPMS-23	1			
001868	TAPMS-24	1			
001869	TC-ADR0	3			
001870	TC-ADR1	3			
001871	TC-ADR2	3			
001872	TC-CAPDC	3			
001873	TC-CDIRI	2			
001874	TC-CPREF	2			
001875	TC-DATA0	3			
001876	TC-DATA1	3			
001877	TC-DATA2	3			
001878	TC-DATA3	3			
001879	TC-DATA4	3			
001880	TC-DATA5	3			
001881	TC-DATA6	3			
001882	TC-DATA7	3			
001883	TC-ENB	3			
001884	TC-ENBG	3			
001885	TC-EREF	2			
001886	TC-EVEN	4			
001887	TC-EVENT	6			
001888	TC-HALL1	2			
001889	TC-HALL2	2			
001890	TC-HALL3	2			
001891	TC-INEX	2			
001892	TC-IRQ	3			
001893	TC-REF	2			
001894	TC-REFP	2			
001895	TC-RESMP	3			
001896	TC-RW	3			
001897	TC-SL1	2			
001898	TC-SL2	2			
001899	TC-SL3	2			
001900	TC-SL4	2			
001901	TC-TCDIR	5			
001902	TC-TCMV	5			
001903	TC-TCMVI	2			
001904	TD-ADR0	6			
001905	TD-ADR1	6			
001906	TD-ADR2	5			
001907	TD-ADR3	3			
001908	TD-BUSSW	1			
001909	TD-CAPSY	3			
001910	TD-CRES	2			
001911	TD-C307K	6			
001912	TD-C614K	1			
001913	TD-C76K	17			
001914	TD-DATA0	6			
001915	TD-DATA1	6			
001916	TD-DATA2	6			
001917	TD-DATA3	6			
001918	TD-DATA4	6			
001919	TD-DATA5	6			
001920	TD-DATA6	6			
001921	TD-DATA7	6			
001922	TD-DRENB	1			
001923	TD-ENB	6			
001924	TD-EVENT	7			
001925	TD-HEACT	7			
001926	TD-ICRE1	1			

```
*    WILLI STUDER AG    *    S I G N A L    S T A T I S T I C S          *  89/07/20  *  9:25  *  P A G E 269   *
*                                * TAPE TRANSPORT & AUDIO MCH *                *  89/04/19 - 00                  *
```

SIG.NR	SIGNAL NAME	OCCURRENCE	COLOR	SPECIAL # * < @	#-NODE ASY GRP
001927	TD-ICRE2	1			
001928	TD-ICRE3	1			
001929	TD-ICRE4	1			
001930	TD-ICRE5	1			
001931	TD-IRQ	4			
001932	TD-MOVE	7			
001933	TD-MOVE1	5			
001934	TD-MOVE2	5			
001935	TD-MVCLK	5			
001936	TD-MVDIR	10			
001937	TD-NMI	1			
001938	TD-PENBL	2			
001939	TD-PENBR	2			
001940	TD-PWENB	1			
001941	TD-PWEN1	4			
001942	TD-PWEN2	4			
001943	TD-RALC1	3			
001944	TD-RALC2	3			
001945	TD-RALEN	3			
001946	TD-RALP1	3			
001947	TD-RALP2	3			
001948	TD-RARC1	5			
001949	TD-RARC2	5			
001950	TD-RAREN	5			
001951	TD-RARP1	5			
001952	TD-RARP2	5			
001953	TD-RES	5			
001954	TD-RESET	2			
001955	TD-RESMP	2			
001956	TD-RW	6			
001957	TD-RX	1			
001958	TD-SHLD	3			
001959	TD-SL2	1			
001960	TD-SL3	2			
001961	TD-SL4	2			
001962	TD-SL5	2			
001963	TD-SL6	2			
001964	TD-SL7	2			
001965	TD-SR/AA	2			
001966	TD-SR/AB	2			
001967	TD-SR/AC	2			
001968	TD-SYNC	4			
001969	TD-TCM1	6			
001970	TD-TCM2	6			
001971	TD-TML1	5			
001972	TD-TML2	5			
001973	TD-TMR1	5			
001974	TD-TMR2	5			
001975	TD-TRSP	3			
001976	TD-TRSPR	2			
001977	TD-TX	1			
001978	TD-YTRSP	2			
001979	TD-9600	1			
001980	TDS-CLK	3			
001981	TDS-CTS	2			
001982	TDS-DTR	2			
001983	TDS-RX	2			
001984	TDS-TX	2			
001985	TL-A0	2			
001986	TL-CS	2			
001987	TL-D0	2			
001988	TL-D1	2			
001989	TL-D2	2			
001990	TL-D3	2			
001991	TL-D4	2			
001992	TL-D5	2			
001993	TL-D6	2			
001994	TL-D7	2			
001995	TL-ENB	2			
001996	TL-RESET	2			
001997	TL-WR	2			
001998	TM-A	2			
001999	TM-ADR0	4			
002000	TM-ADR1	4			
002001	TM-ADR2	4			
002002	TM-ADR3	3			
002003	TM-B	2			
002004	TM-BUSSW	2			
002005	TM-C	2			
002006	TM-CUE1	4			
002007	TM-CUE2	4			
002008	TM-C307K	1			
002009	TM-C614K	1			
002010	TM-C76K	1			
002011	TM-C9600	1			
002012	TM-D	2			
002013	TM-DADR0	5			
002014	TM-DADR1	3			
002015	TM-DADR2	3			
002016	TM-DATA0	8			
002017	TM-DATA1	8			
002018	TM-DATA2	8			
002019	TM-DATA3	8			
002020	TM-DATA4	8			
002021	TM-DATA5	8			
002022	TM-DATA6	8			
002023	TM-DATA7	8			
002024	TM-DENB	5			
002025	TM-DP	2			
002026	TM-DRENB	2			
002027	TM-DRES	5			
002028	TM-DRW	5			
002029	TM-DSL4	3			
002030	TM-DSL5	3			
002031	TM-D0	2			
002032	TM-D1	2			
002033	TM-D2	2			
002034	TM-D3	2			

```
*    WILLI STUDER AG    *    S I G N A L    S T A T I S T I C S          *  89/07/20  *  9:25  *  P A G E 270   *
*                                * TAPE TRANSPORT & AUDIO MCH *                *  89/04/19 - 00                  *
```

SIG.NR	SIGNAL NAME	OCCURRENCE	COLOR	SPECIAL # * < @	#-NODE ASY GRP
002035	TM-D4	2			
002036	TM-D5	2			
002037	TM-D6	2			
002038	TM-D7	2			
002039	TM-D8	2			
002040	TM-D9	2			
002041	TM-E	2			
002042	TM-ENB	4			
002043	TM-EN0	5			
002044	TM-EN1	2			
002045	TM-EN2	2			
002046	TM-EN3	2			
002047	TM-EN4	2			
002048	TM-EVENT	6			
002049	TM-F	2			
002050	TM-G	2			
002051	TM-IADR0	5			
002052	TM-IADR1	3			
002053	TM-IADR2	3			
002054	TM-IENB	5			
002055	TM-IRES	5			
002056	TM-IRQ	2			
002057	TM-IRW	5			
002058	TM-ISL4	3			
002059	TM-ISL5	3			
002060	TM-KBIR	3			
002061	TM-L1	2			
002062	TM-L2	2			
002063	TM-L3	2			
002064	TM-L4	2			
002065	TM-L5	2			
002066	TM-NMI	1			
002067	TM-REMIR	3			
002068	TM-RES	3			
002069	TM-RESET	2			
002070	TM-RESMP	2			
002071	TM-RL0	2			
002072	TM-RL1	7			
002073	TM-RL2	4			
002074	TM-RL3	4			
002075	TM-RL4	4			
002076	TM-RL5	4			
002077	TM-RL6	4			
002078	TM-RL7	4			
002079	TM-RW	4			
002080	TM-RX	2			
002081	TM-SEIR	2			
002082	TM-SHIR	3			
002083	TM-SL2	2			
002084	TM-SL3	2			
002085	TM-SL4	3			
002086	TM-SL5	3			
002087	TM-SL6	3			
002088	TM-SL7	1			
002089	TM-TX	2			
002090	TONGEN	38			
002091	TP-ADR0	4			
002092	TP-ADR1	4			
002093	TP-ADR2	4			
002094	TP-ADR3	4			
002095	TP-BUSSW	4			
002096	TP-C307K	4			
002097	TP-C614K	4			
002098	TP-C76K	4			
002099	TP-C9600	4			
002100	TP-DATA0	4			
002101	TP-DATA1	4			
002102	TP-DATA2	4			
002103	TP-DATA3	4			
002104	TP-DATA4	4			
002105	TP-DATA5	4			
002106	TP-DATA6	4			
002107	TP-DATA7	4			
002108	TP-DRENB	4			
002109	TP-ENB	4			
002110	TP-IRQ	4			
002111	TP-NMI	4			
002112	TP-PWRGN	4			
002113	TP-RESET	4			
002114	TP-RESMP	4			
002115	TP-RW	4			
002116	TP-RX	4			
002117	TP-SL2	4			
002118	TP-SL3	4			
002119	TP-SL4	4			
002120	TP-SL5	4			
002121	TP-SL6	4			
002122	TP-SL7	4			
002123	TP-TX	4			
002124	TR-A	2			
002125	TR-B	2			
002126	TRACK00	2			
002127	TRANSA	6			
002128	TRANSB	6			
002129	TRANSCM	6			
002130	TS-RX	4			
002131	TS-TX	4			
002132	WRITEDA	2			
002133	WRITEGA	2			
002134	WRITEPRO	2			
002135	Y-CRTALK	9			
002136	0.0 VCU	40			
002137	0-PNOISE	4			
002138	0-RES	4			
002139	0SENS	1	5		

```
*****************************************************************************************************************************
*    WILLI STUDER AG   *    S I G N A L     S T A T I S T I C S          *  89/07/20  *   9:25  *   P A G E 271    *
*****************************************************************************************************************************
*                          * TAPE TRANSPORT & AUDIO MCH *                  *  89/04/19 - 00                          *
*****************************************************************************************************************************

                          OCCUR-            SPECIAL    #-NODE
SIG.NR   SIGNAL NAME      RENCE    COLOR    # * < @    ASY GRP
------   -------------    ------   -----    -------    -------
002140   OSTABIN             69    4
002141   OSTABINS             9    0
=============================================================
```

6. Tape Deck Section

ESE = Electrostatically sensitive assembly

Contents			GRP/ELM	
Block diagram tape deck				6/1
Block diagram power supply	1.820.350.00		GRP1-12	6/2
Power supply	1.820.350.00		GRP1-12	6/3
Power supply	1.820.350.81		GRP1-12	6/5
Power supply	1.820.350.82		GRP1-12	6/7
Block diagram power fail detector	1.820.791.00	ESE	GRP14	6/9
Power fail detector	1.820.791.00	ESE	GRP14	6/11
Block diagram power supply	1.820.353.00		GRP1-11	6/13
Power supply	1.820.353.81		GRP1-11	6/15
Power supply	1.820.353.82		GRP1-11	6/17
Main soft start board	1.820.830.81	ESE	GRP3	6/19
Block diagram fuse/supply failure detector	1.820.866.00	ESE	GRP59	6/21
Fuse/supply faiture detector	1.820.866.00	ESE	GRP59	6/23
Stabilizer ± 15V, 24V	1.820.871.00	ESE	GRP31	6/25
Block diagram stabilizer ±15V, 24V	1.820.871.81	ESE	GRP31	6/29
Stabilizer ± 15V, 24V	1.820.871.81	ESE	GRP31	6/31
Stabilizer ± 26V, 5,6V, 24V	1.820.872.00	ESE	GRP32	6/35
Block diagram stabilizer ± 26V, 5,6V, 24V	1.820.872.81	ESE	GRP32	6/39
Stabilizer ± 26V, 5,6V, 24V	1.820.872.81	ESE	GRP32	6/41
Stabilizer ± 26V, 5,6V, 24V	1.820.872.8..	ESE	GRP32	6/45
Stabilizer ± 26V, 5,6V, 24V	1.820.872.83	ESE	GRP32	6/49
Block diagram stabilizer ± 15V, 24V	1.820.873.00	ESE	GRP31	6/53
Stabilizer ± 15V, 24V	1.820.873.00	ESE	GRP31	6/55
Stabilizer ± 15V, 24V	1.820.873.81	ESE	GRP31	6/59
Distribution board TD	1.820.865.00		GRP35	6/61
Distribution board TD	1.820.865.81		GRP35	6/62
Basis board TD	1.820.704.00	ESE	GRP20	6/63
Basis board TD	1.820.704.81	ESE	GRP20	6/65
Block diagram MPU TD-control	1.820.781.20	ESE	GRP20/ELM46	6/67
MPU TD-control	1.820.781.20	ESE	GRP20/ELM46	6/69
Block diagram TD serial interface	1.820.763.00	ESE	GRP20/ELM47	6/71
TD serial interface	1.820.763.82	ESE	GRP20/ELM47	6/73
TD serial interface	1.820.763.83	ESE	GRP20/ELM47	6/75
Block diagram TD periphery control	1.820.762.00	ESE	GRP20/ELM43	6/77
TD periphery control	1.820.762.00	ESE	GRP20/ELM43	6/79
TD periphery control	1.820.762.81	ESE	GRP20/ELM43	6/81
Block diagram opto sensor	1.820.793.....	ESE	GRP44	6/83
Opto sensor	1.820.793.82	ESE	GRP44	6/85
Block diagram tape lifter control	1.820.773.00	ESE	GRP46/47	6/87
Tape lifter control	1.820.773.82	ESE	GRP46/47	6/89
Block diagram TD counter/timer	1.820.761.00	ESE	GRP20/ELM44	6/91
TD counter/timer	1.820.761.81	ESE	GRP20/ELM44	6/93
TD counter/timer	1.820.823.00	ESE	GRP20/ELM44	6/95
Move sensor	1.820.770.00	ESE	GRP45	6/97
Block diagram move sensor	1.820.770.82	ESE	GRP45	6/99
Move sensor	1.820.770.82	ESE	GRP45	6/101
Motor tacho	1.820.771.81	ESE	GRP36/37	6/103
Motor tacho	1.820.771.83	ESE	GRP36/37	6/105
Block diagram pinch roller gate	1.820.831.00	ESE	GRP60	6/107
Pinch roller gate	1.820.831.81	ESE	GRP60	6/109

Block diagram spooling motor control	1.820.822.00 ESE	GRP20/ELM45	6/111
Spooling motor control	1.820.822.00 ESE	GRP20/ELM45	6/113
Tape tension sensor	1.820.772.81 ESE	GRP42/43	6/115
Block diagram spooling motor driver	1.820.759.85 ESE	GRP20/ELM40	6/117
Spooling motor driver	1.820.759.85 ESE	GRP20/ELM40	6/119
Block diagram spooling motor drive amplifier	1.820.875.00 ESE	GRP30/33	6/121
Spooling motor drive amplifier	1.820.875.00 ESE	GRP30/33	6/123
Spooling motor drive amplifier	1.820.875.81 ESE	GRP30/33	6/125
Spooling motor drive amplifier	1.820.875.82 ESE	GRP30/33	6/127
Block diagram power fail sense board	1.820.869.00 ESE	GRP23	6/131
Power fail sense board	1.820.869.00 ESE	GRP23	6/133
Block diagram capstan control unit	1.820.764.22 ESE	GRP20/ELM41	6/135
Capstan control unit	1.820.764.22 ESE	GRP20/ELM41	6/137
Capstan interface	1.820.727.00 ESE	GRP20/ELM42	6/139
Block diagram capstan motor drive amplifier	1.820.774.24 ESE	GRP39	6/141
Capstan motor drive amplifier	1.820.774.24 ESE	GRP39	6/143
Capstan motor drive amplifier	1.820.774.25 ESE	GRP39	6/145
Block diagram tacho sensor electronics	1.820.695.81 ESE	GRP38	6/147
Tacho sensor electronics	1.820.695.81 ESE	GRP38	6/149
Tacho sensor electronics	1.820.695.83 ESE	GRP38	6/151
Hall sensor	1.021.697.00 ESE		6/153
Time counter control	1.820.861.00 ESE	GRP 28	6/155

BLOCK DIAGRAM A820 MCH
TAPE DECK

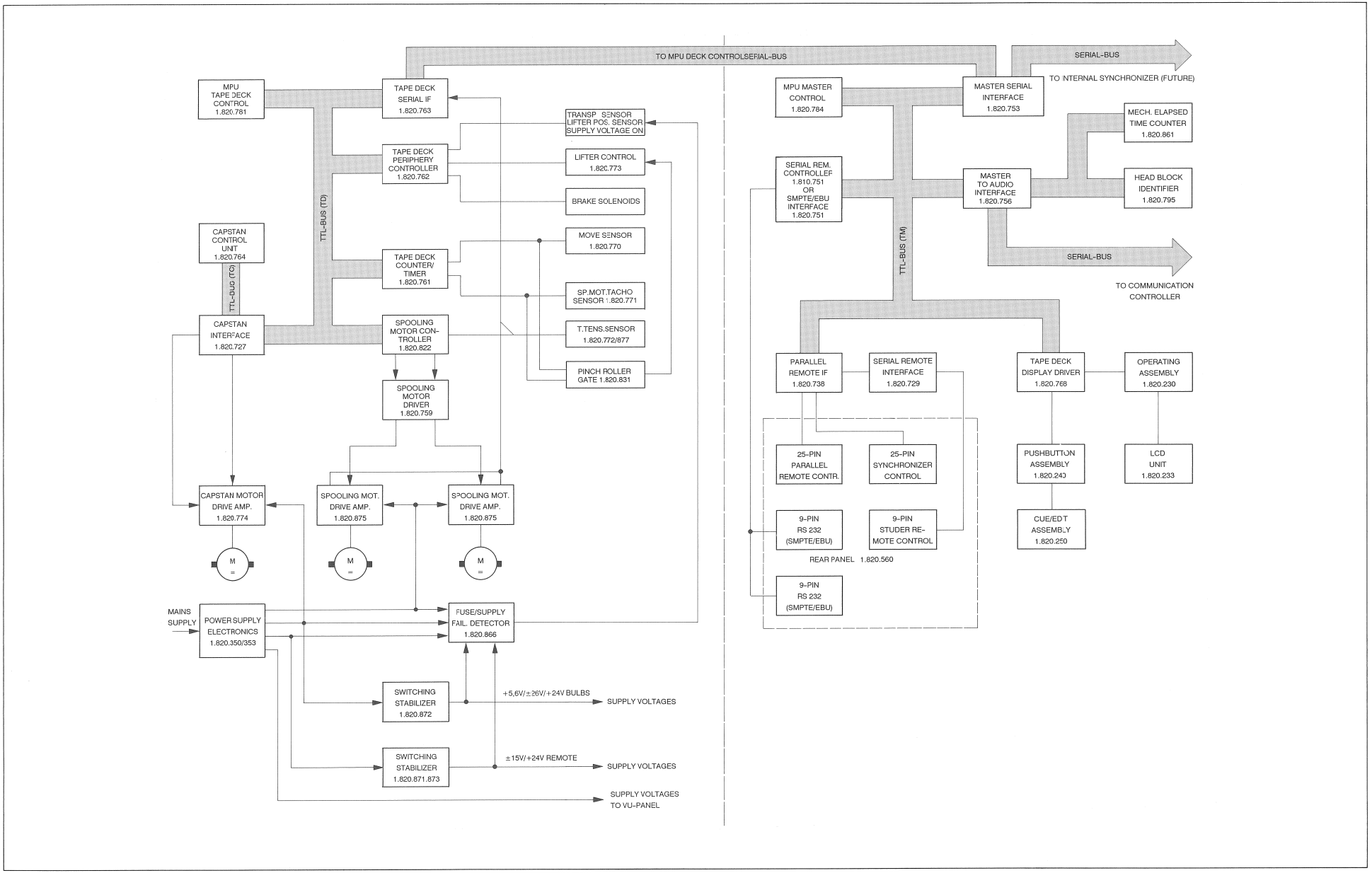

BLOCK DIAGRAM
POWER SUPPLY 1.820.350

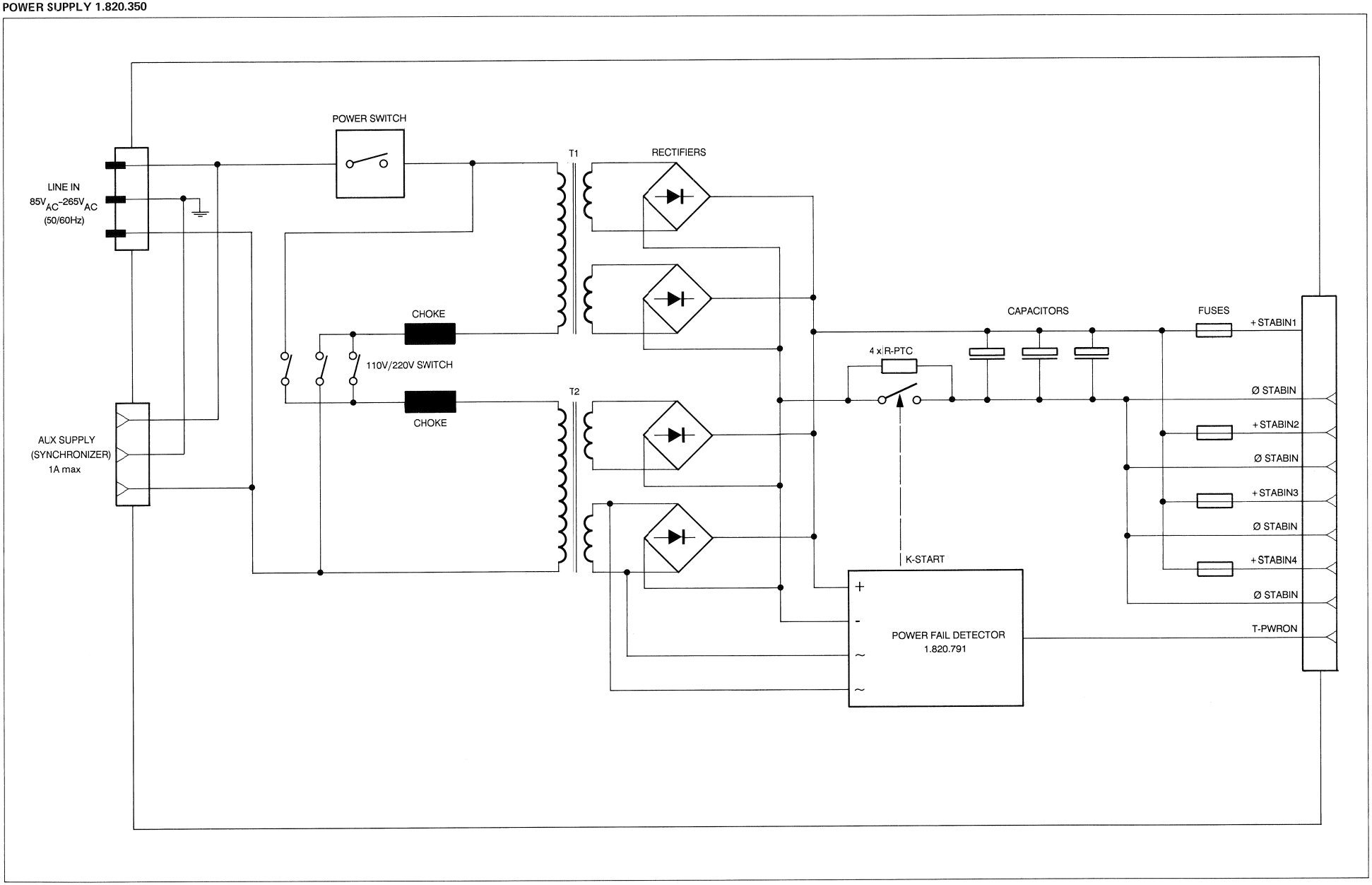

POWER SUPPLY 1.820.350.00

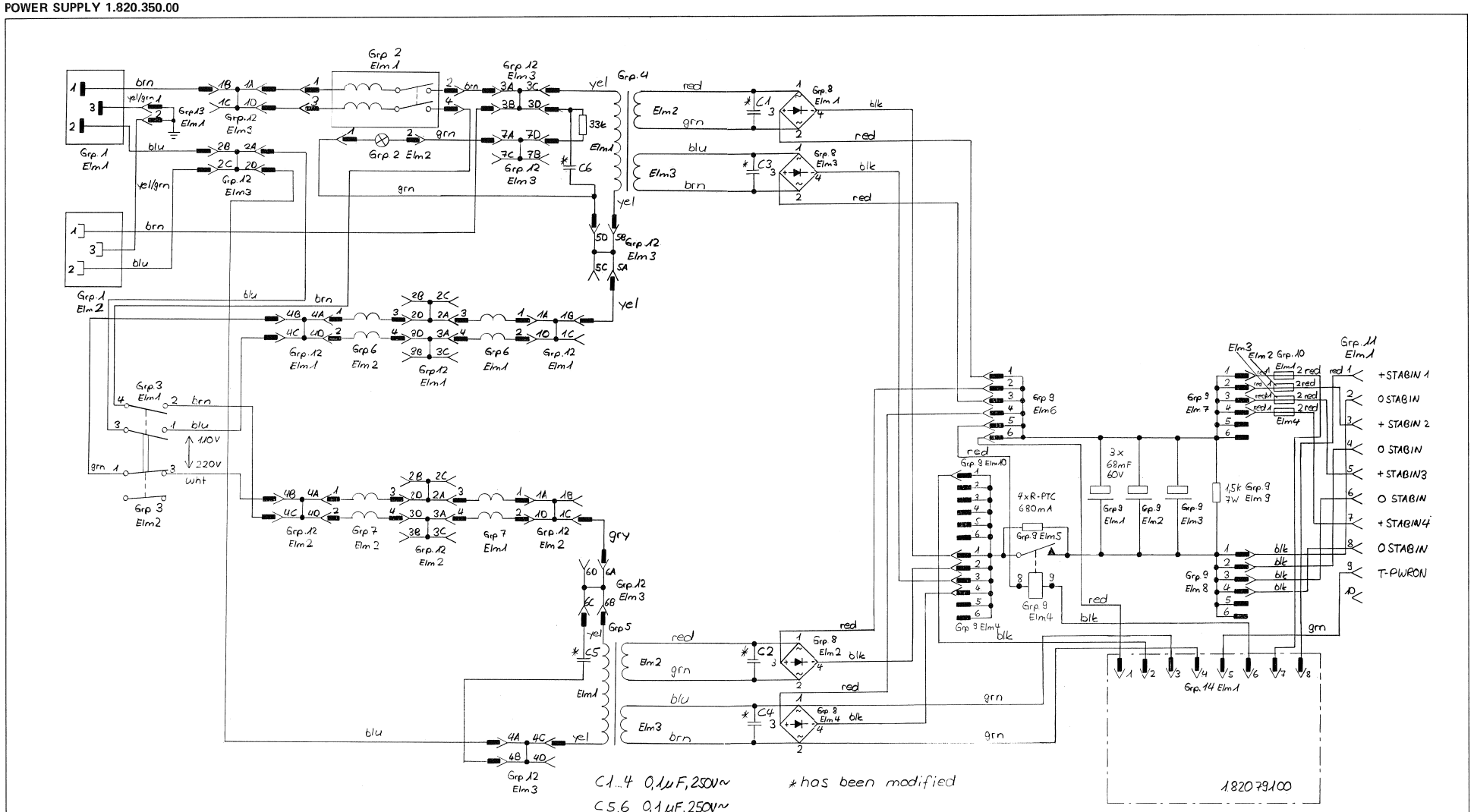

0 22.09.86 BD.	1 22.04.87 BD.	. .	. .	. .
STUDER	POWER SUPPLY		SC	1.820.350-00

POWER SUPPLY 1.820.350.00

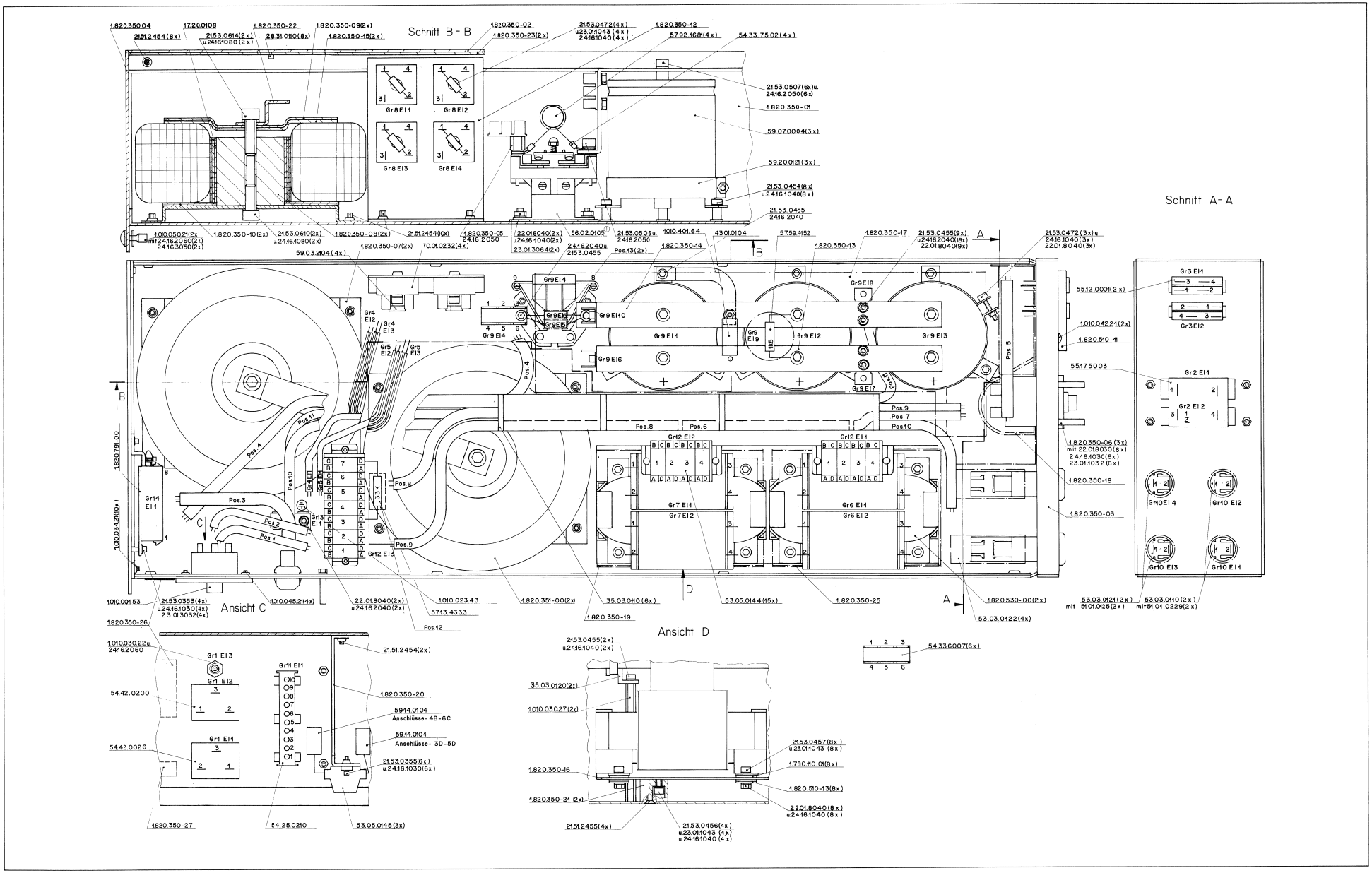

POWER SUPPLY 1.820.350.81

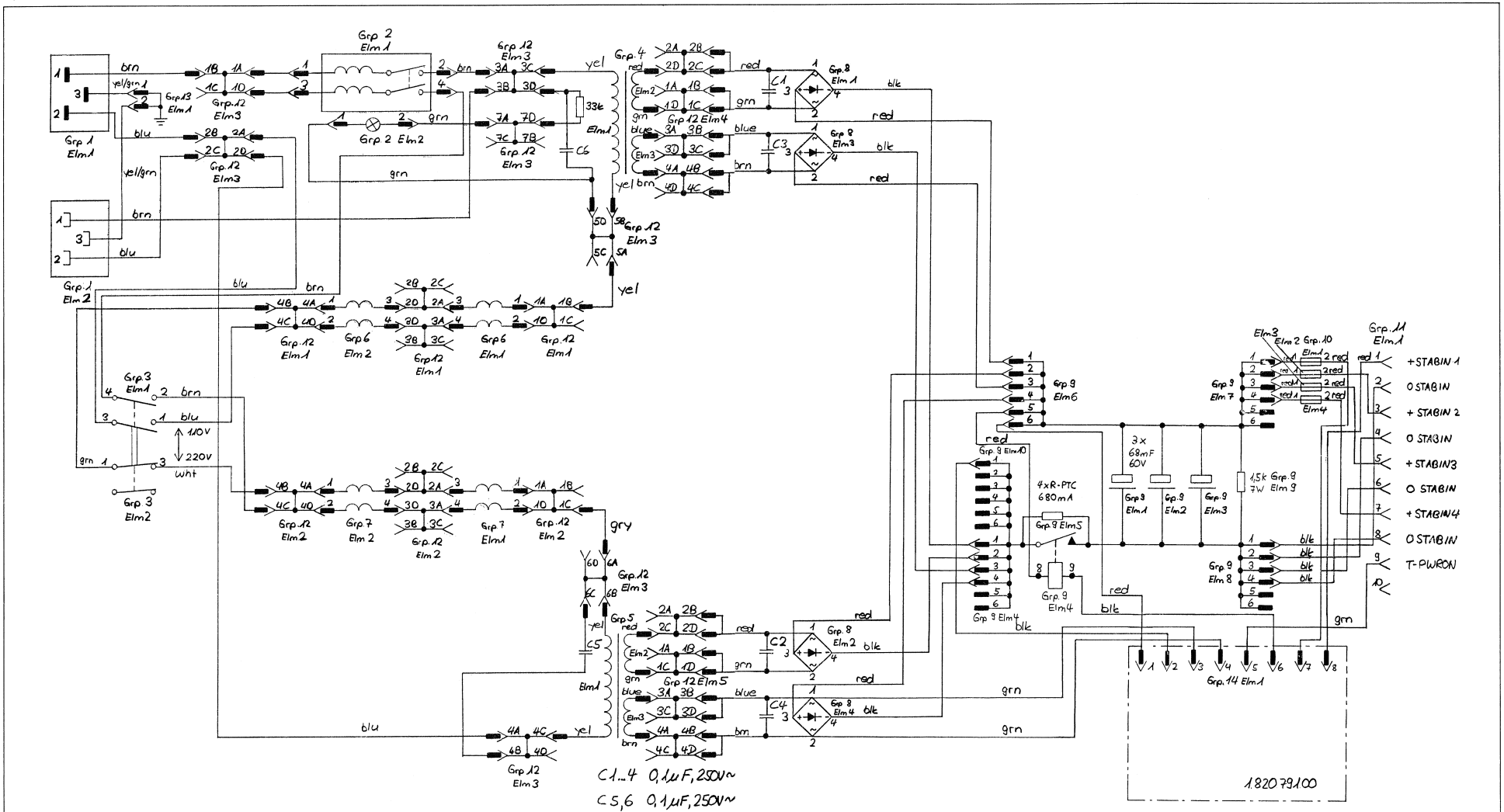

01.10.87			
STUDER	POWER SUPPLY	SC	1.820.350-81

POWER SUPPLY 1.820.350.81

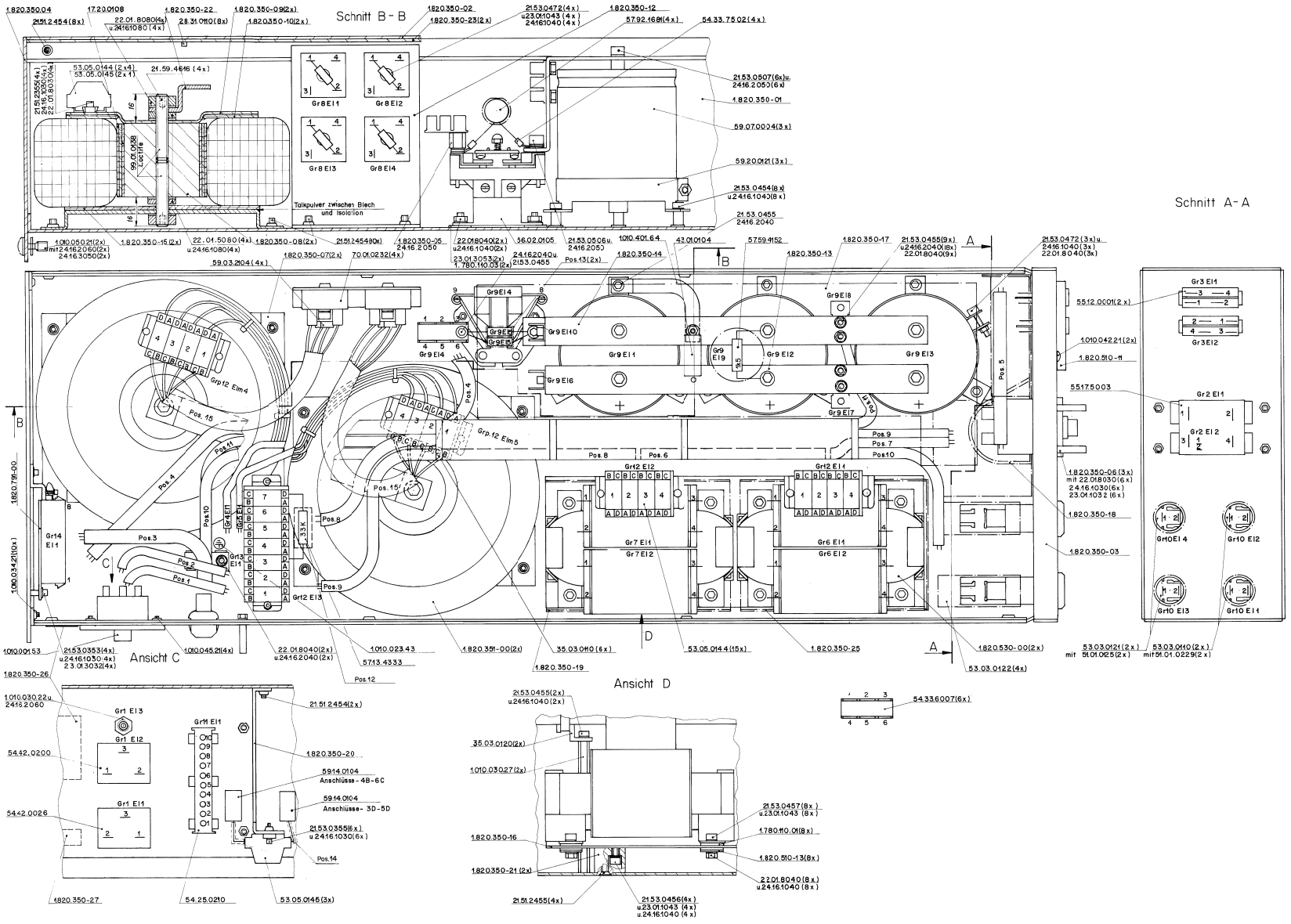

POWER SUPPLY 1.820.350.82

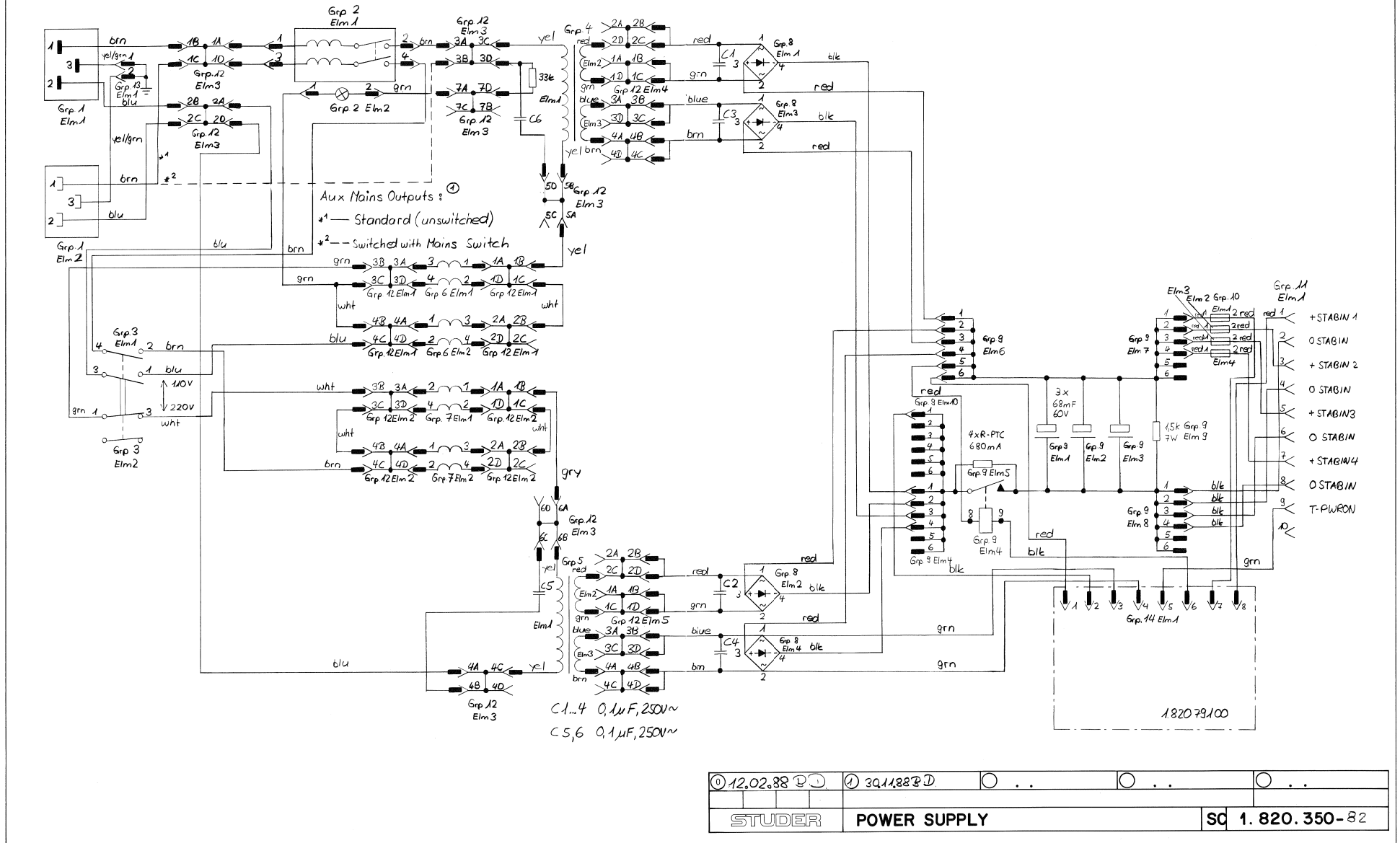

⓪ 12.02.88	① 30.11.88			
STUDER	POWER SUPPLY		SC	1. 820. 350- 82

POWER SUPPLY 1.820.350.82

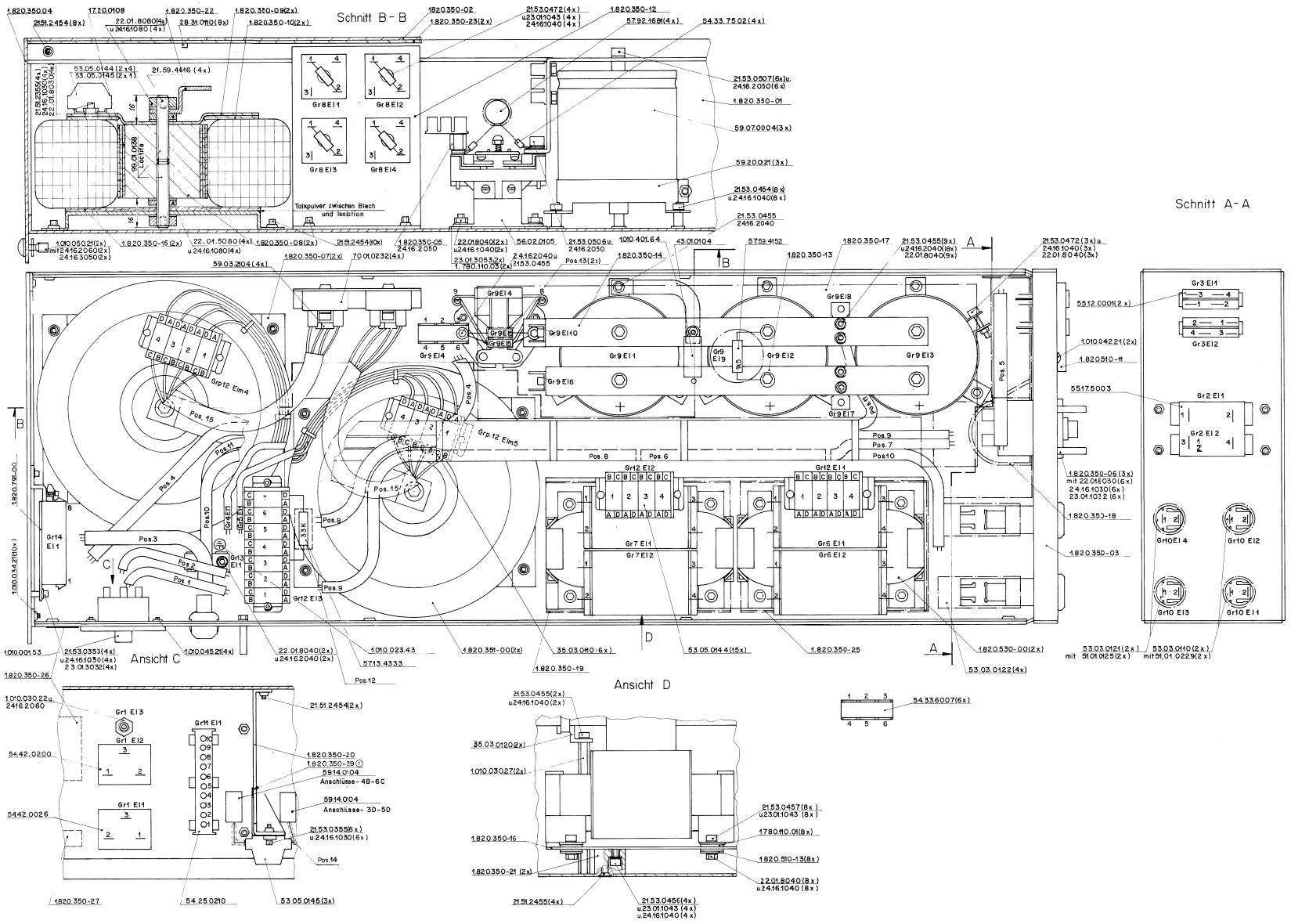

BLOCK DIAGRAM
POWER FAIL DETECTOR PCB 1.820.791

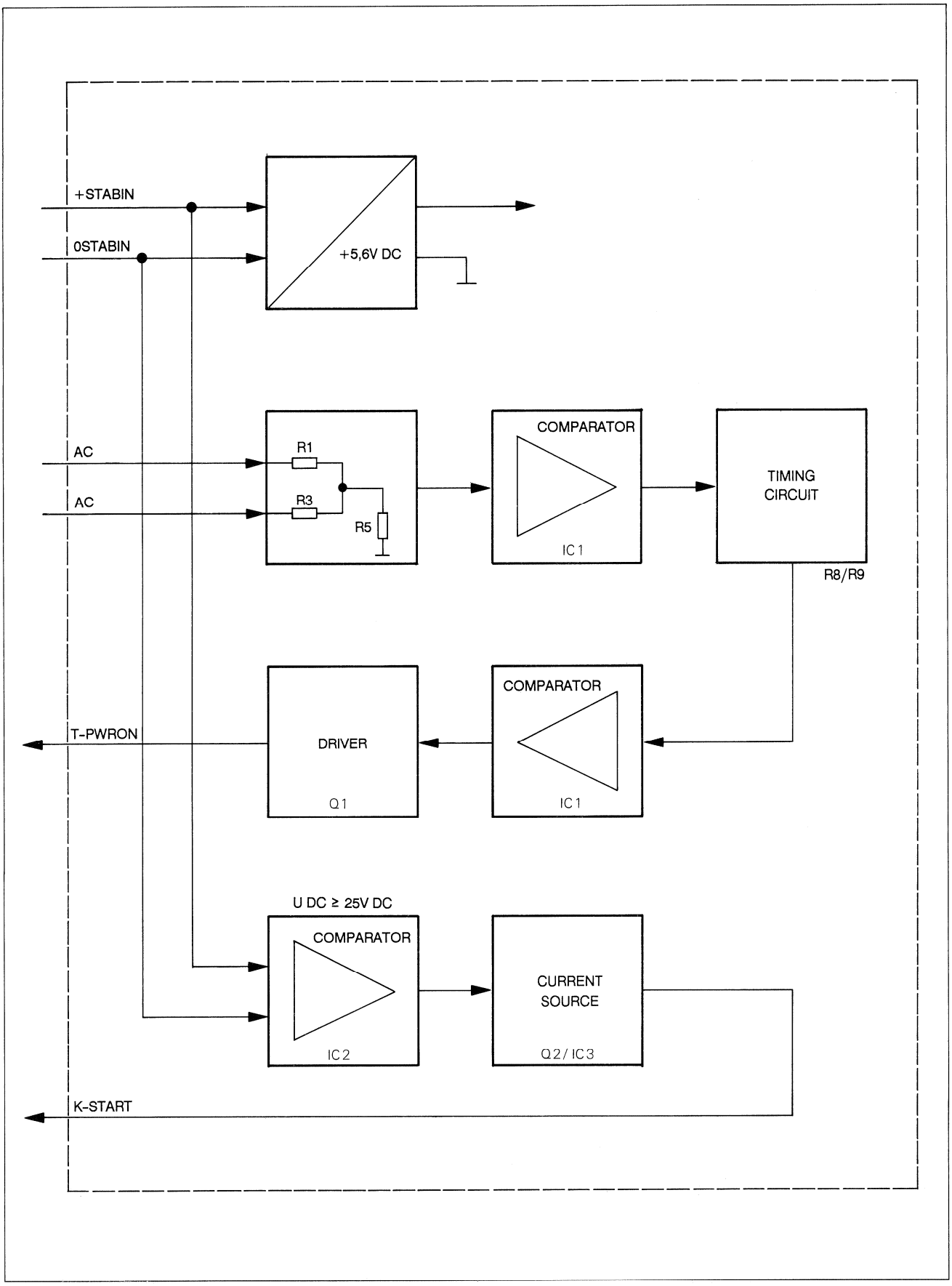

POWER FAIL DETECTOR PCB 1.820.791.00

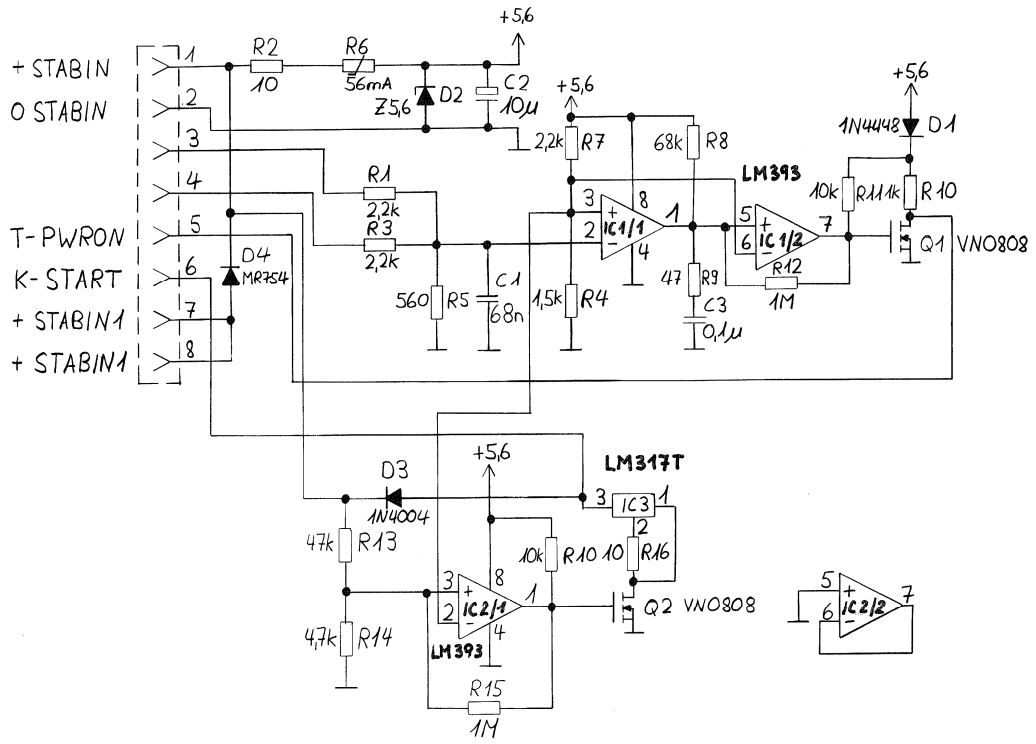

0 17.10.86 B.D.				
				PAGE 1 OF 1
STUDER	POWER FAIL DETECTOR PCB			1.820.791.00

POWER FAIL DETECTOR PCB 1.820.791.00

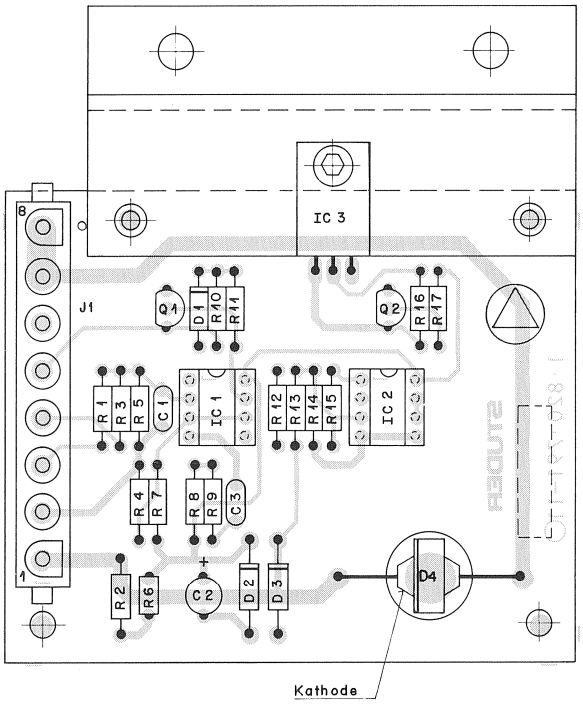

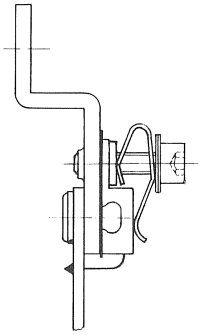

IND.	POS.NO.	PART NO.	VALUE	SPECIFICATIONS / EQUIVALENT	MANUF.
	C.....1	59.06.0683	68 nF	10%, 63V, PETP	
	C.....2	59.22.6100	10 uF	-20%, 35V, El	
	C.....3	59.06.0104	100 nF	10%, 63V, PETP	
	D.....1	50.04.0125	1N 4448		Fc,ITT,Ph,Ses,Tf
	D.....2	50.04.1504	5.6 V Z	BZX 85 C 5V6, BZV 85 C 5V6	ITT,Mot,Tf,Tho
	D.....3	50.04.0122	1N 4001		GI,ITT,Mot
	D.....4	50.04.0518	MR 754		Mot
	IC....1	50.05.0283	LM 393	TDB 01930P	TI,NS,Tho
	IC....2	50.05.0283	LM 393	TDB 01930P	TI,NS,Tho
	IC....3	50.10.0104	LM 317 T	LM 317 KC, LM 317 SP	Mot,NS,TI,SGS,Tho
	P.....1			See Note 1	
	Q.....1	50.03.1505	VN 0808 M		Six,Fe
	Q.....2	50.03.1505	VN 0808 M		Six,Fe
	R.....1	57.11.4222	2.2 kOhm	2%	
	R.....2	57.11.4100	10 Ohm	2%	
	R.....3	57.11.4222	2.2 kOhm	2%	
	R.....4	57.11.4152	1.5 kOhm	2%	
	R.....5	57.11.4561	560 Ohm	2%	
	R.....6	57.92.1560	90 Ohm	Philips Nr. 2322 660 15691	
	R.....7	57.11.4222	2.2 kOhm	2%	
	R.....8	57.11.4683	68 kOhm	2%	
	R.....9	57.11.4470	47 Ohm	2%	
	R....10	57.11.4102	1 kOhm	2%	
	R....11	57.11.4103	10 kOhm	2%	
	R....12	57.11.4105	1 MOhm	2%	
	R....13	57.11.4473	47 kOhm	2%	
	R....14	57.11.4472	4.7 kOhm	2%	
	R....15	57.11.4105	1 MOhm	2%	
	R....16	57.11.4100	10 Ohm	2%	
	R....17	57.11.4103	10 kOhm	2%	

IND.	POS.NO.	PART NO.	VALUE	SPECIFICATIONS / EQUIVALENT	MANUF.

Note 1 - Connector, 8 Contacts
Studer Nr. 54.25.0008
AMP Nr. 826851-3

El=Electrolytic, PETP=Polyester Film.

MANUFACTURERS: Fc=Fairchild, Fe=Ferranti, GI=General Instruments,
ITT=Intermetall, Mot=Motorola, NS=National Semiconductors,
Ph=Philips, SES=Sescosem, SGS=SGS/Ates, Six=Siliconix,
Tf=Telefunken, Tho=Thomson, TI=Texas Instruments.

ORIG 86/10/17

BLOCK DIAGRAM
POWER SUPPLY 1.820.353

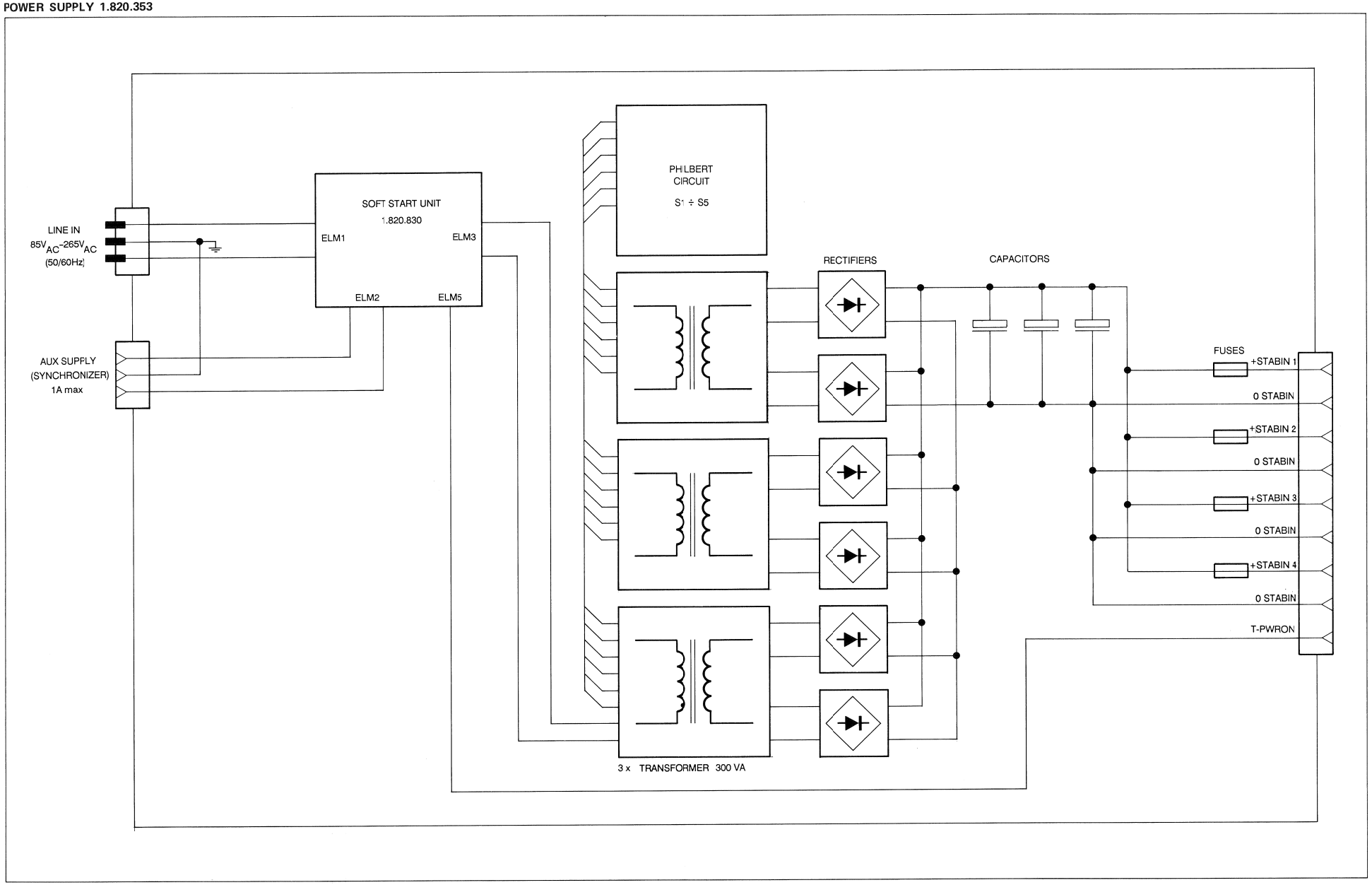

POWER SUPPLY 1.820.353.00

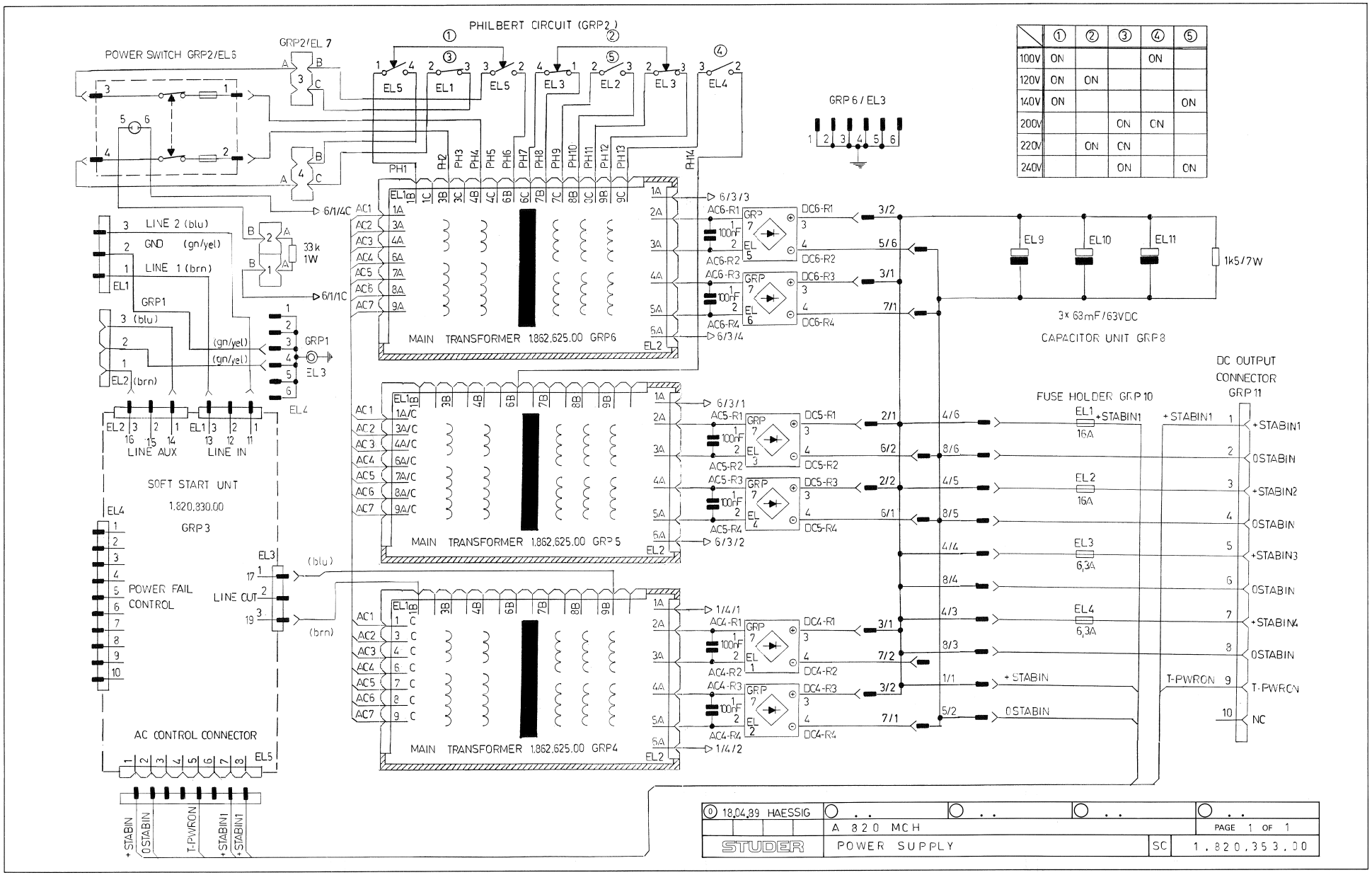

POWER SUPPLY 1.820.353.00

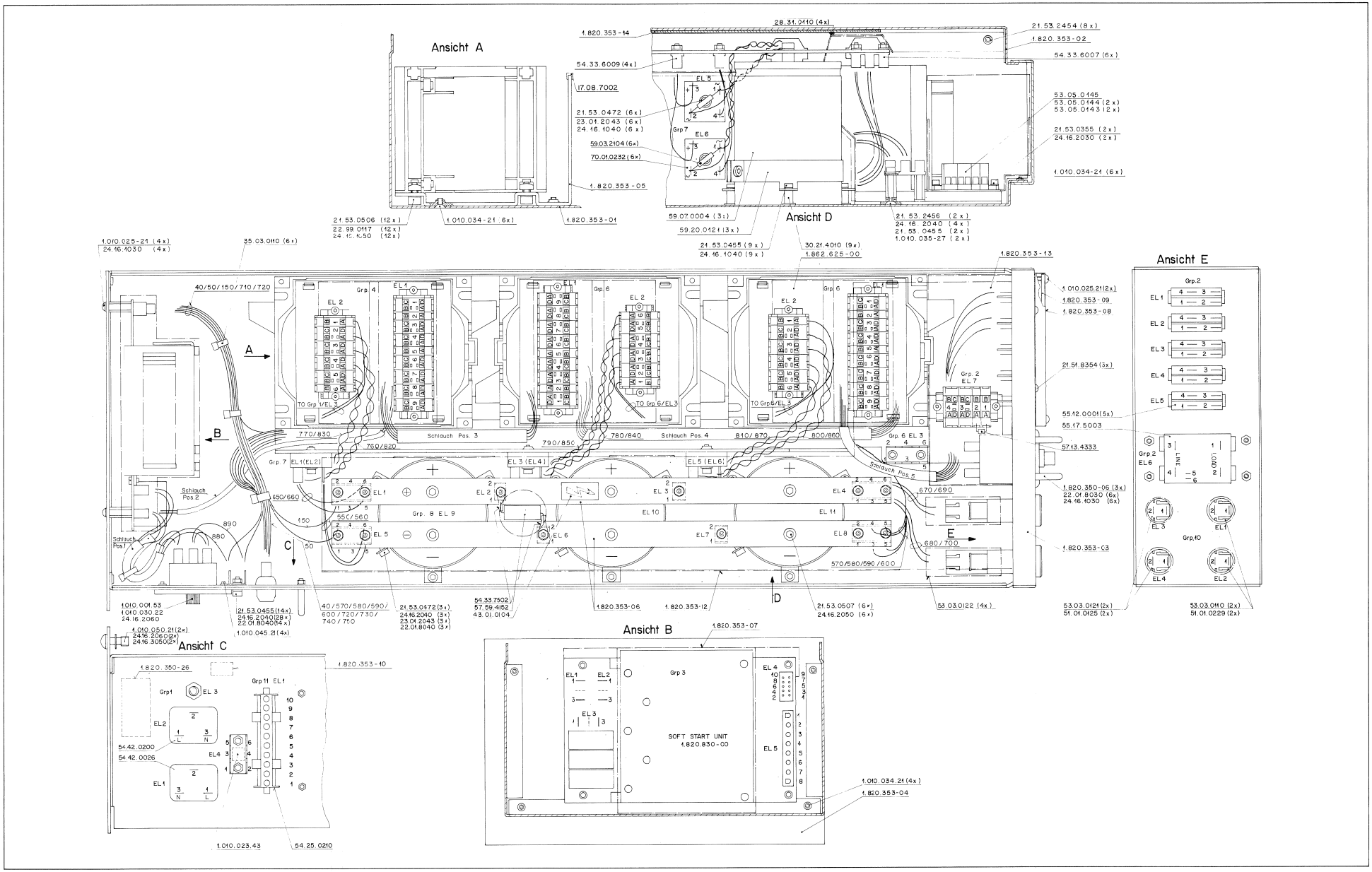

POWER SUPPLY 1.820.353.81

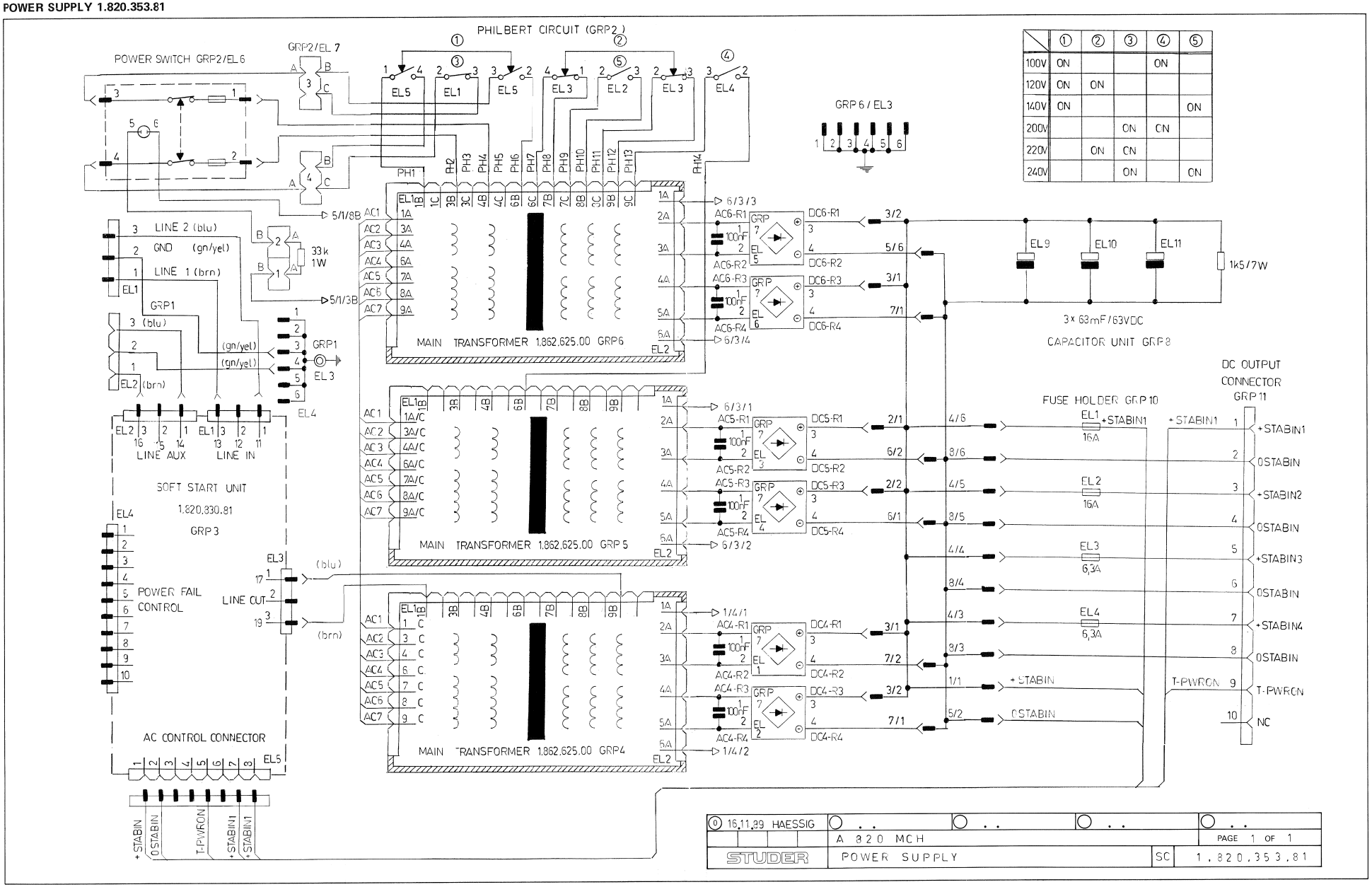

POWER SUPPLY 1.820.353.81

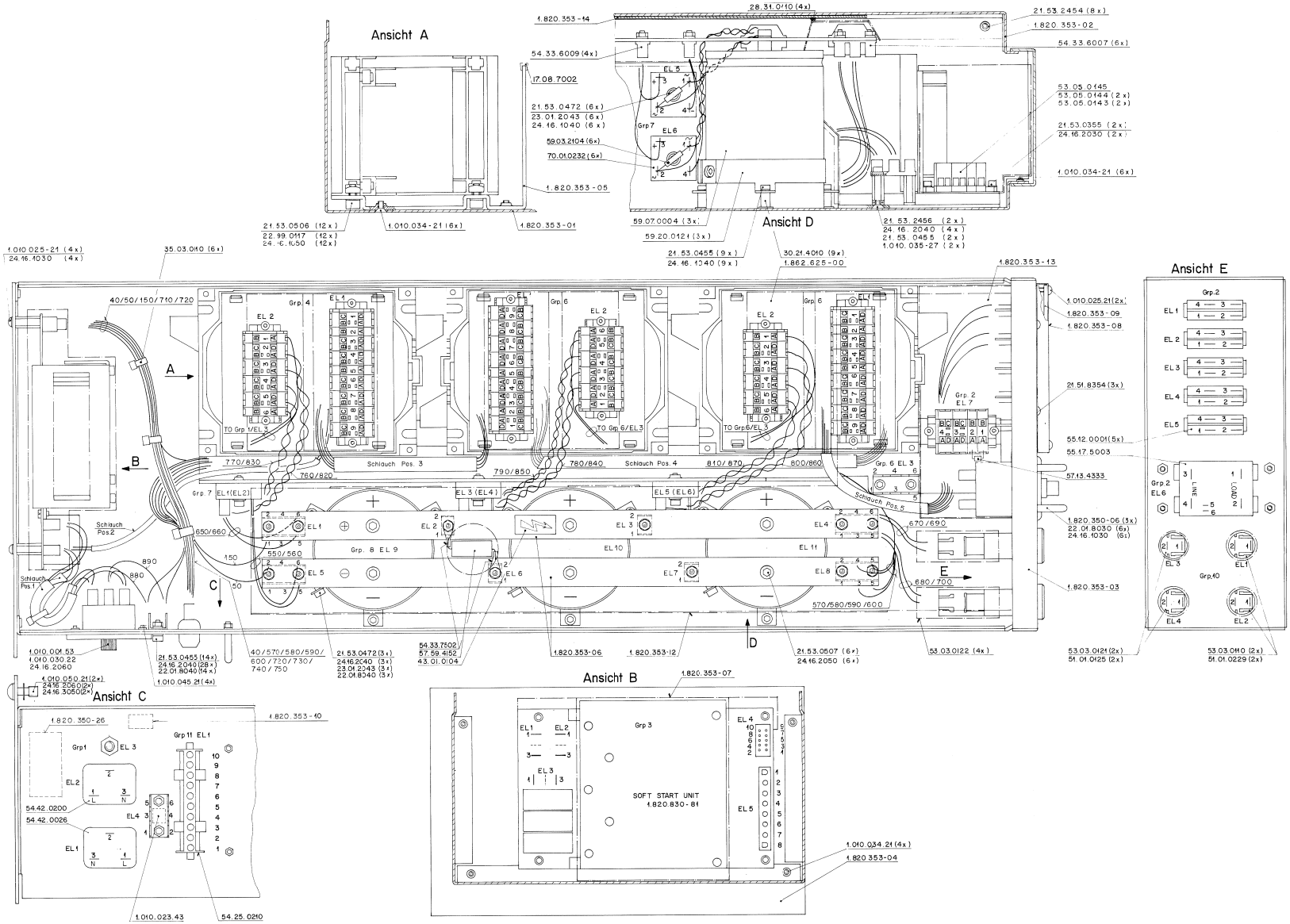

MAIN SOFT START BOARD 1.820.830.81

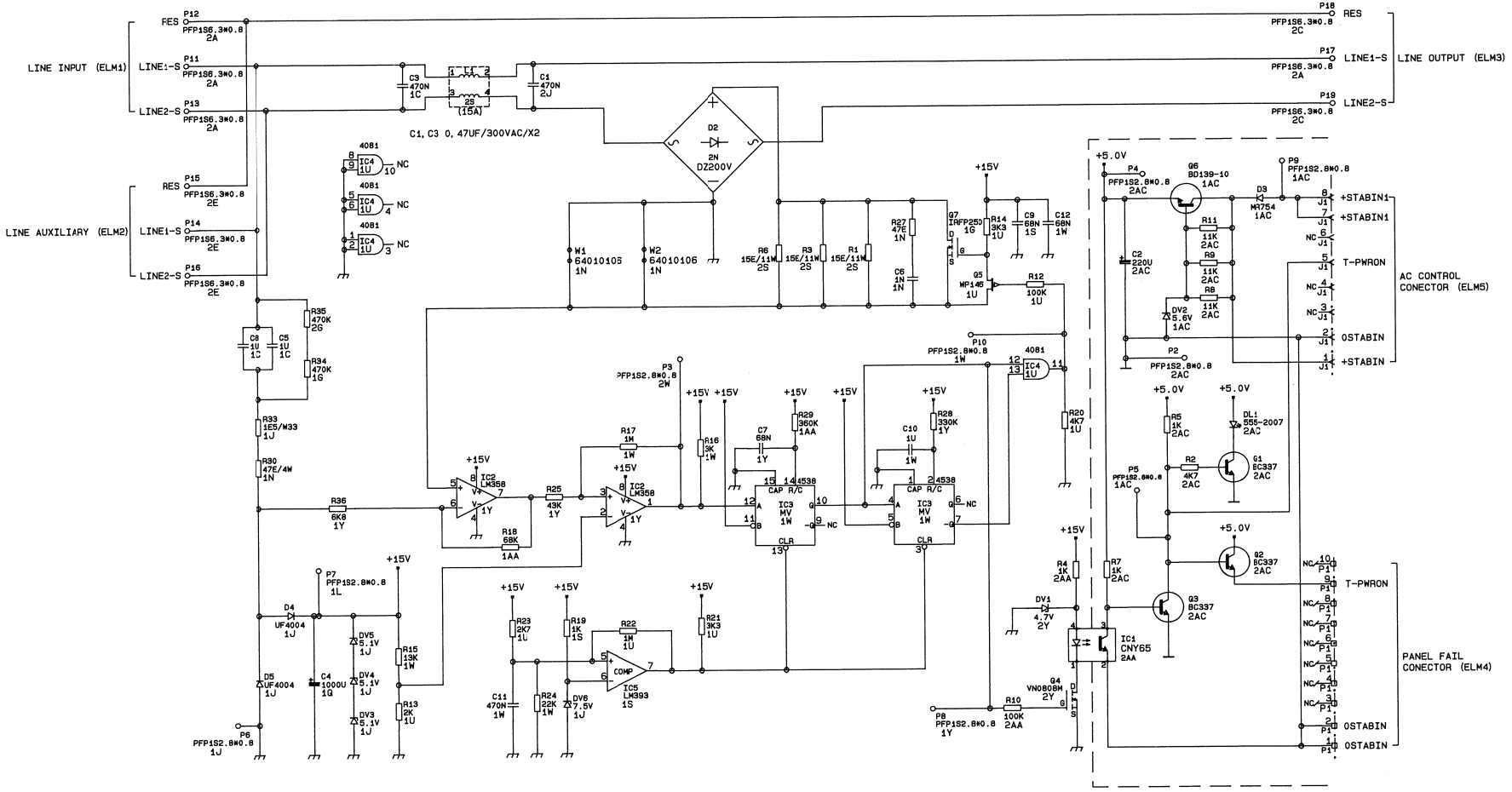

BAUGRUPPE 1.820.830-81 VERWENDET
PCB-LAYOUT 1.820.830-11

⓪ 16.11.89 HRH/GBU				
				PAGE 1 OF 1
STUDER	MAIN SOFT START PCB		SC	1.820.830-81

MAIN SOFT START BOARD 1.820.830.81

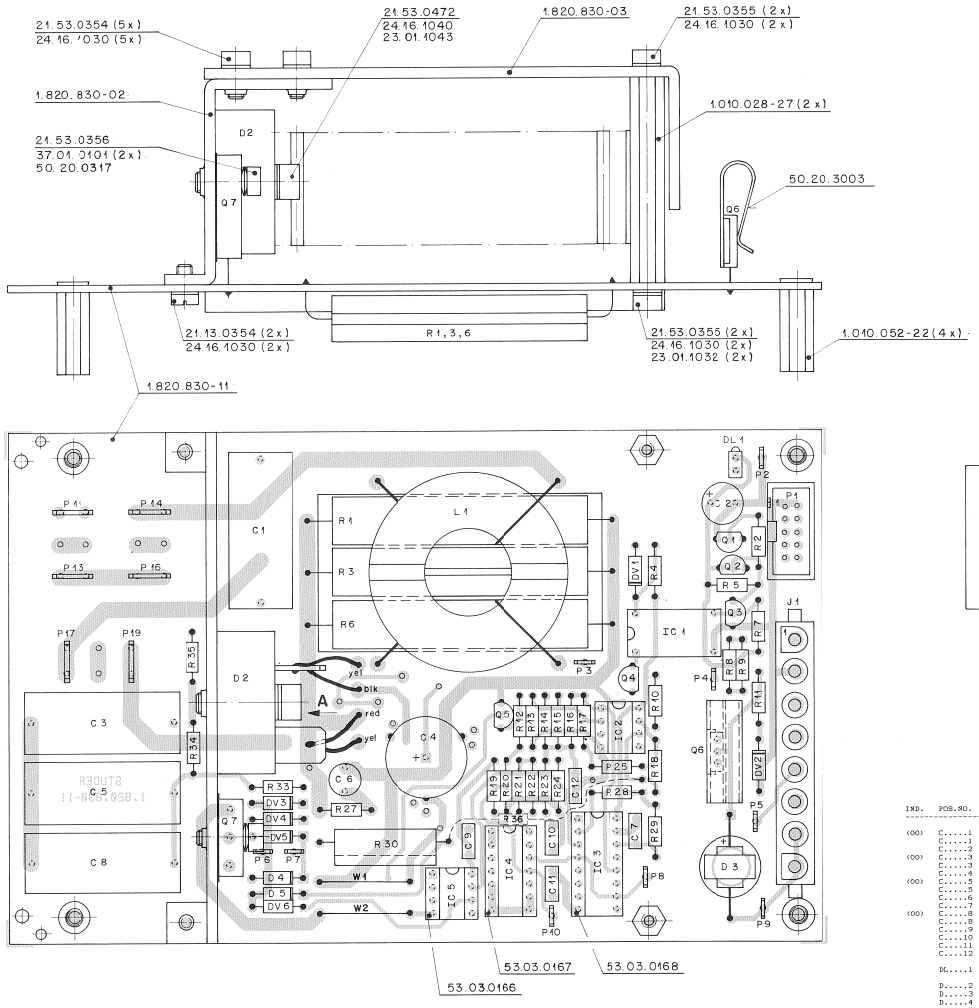

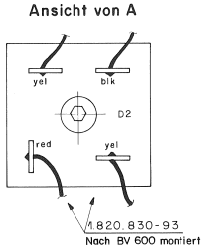

IND.	POS.NO.	PART NO.	VALUE	SPECIFICATIONS / EQUIVALENT	MANUF.
	J.....1	54.25.0008	8 Cont.	AMP nr. 826851 - 3	
	L.....1	62.03.0115		COMMON MODE 15A	
	P.....1	54.14.2001	10 cont.	see note 1	
	P....11	54.02.0335	Flatpin	Grothe & Hart nr. 12523 123 014	
	P....12		not used		
	P....13	54.02.0335	Flatpin	Grothe & Hart nr. 12523 123 014	
	P....14	54.02.0335	Flatpin	Grothe & Hart nr. 12523 123 014	
	P....15		not used		
	P....16	54.02.0335	Flatpin	Grothe & Hart nr. 12523 123 014	
	P....17	54.02.0335	Flatpin	Grothe & Hart nr. 12523 123 014	
	P....18		not used		
	P....19	54.02.0335	Flatpin	Grothe & Hart nr. 12523 123 014	
	Q.....1	50.03.0516	BC 337 E		Sie
	Q.....2	50.03.0516	BC 337 E		Sie
	Q.....3	50.03.0516	BC 337 E		Sie
	Q.....4	50.03.1505	VN 0808M	ZVN010B	Fe,Six
	Q.....5	50.03.0329	WP 146		Six
	Q.....6	50.03.0451	BD 139		Tho,Mot,Ph,SGS,Tf,To
	Q.....7	50.03.1612	IRFF 250		IR
	R.....1	57.57.5150	15 Ohm	10%, 11W	
	R.....2	57.11.3472	4.7 kOhm	10%	
	R.....3	57.57.5150	15 Ohm	10%, 11W	
	R.....4	57.11.3102	1 kOhm	10%	
	R.....5	57.11.3102	1 kOhm	10%	
	R.....6	57.57.5150	15 Ohm	10%, 11W	
	R.....7	57.11.3102	1 kOhm	10%	
	R.....8	57.11.3113	11 kOhm	2%	
	R.....9	57.11.3113	11 kOhm	2%	
	R....10	57.11.3104	100 kOhm	2%	
	R....11	57.11.3113	11 kOhm	2%	
	R....12	57.11.3104	100 kOhm	2%	
	R....13	57.11.3202	2 kOhm	2%	
	R....14	57.11.3332	3.3 kOhm	2%	

IND.	POS.NO.	PART NO.	VALUE	SPECIFICATIONS / EQUIVALENT	MANUF.
	R....15	57.11.3133	13 kOhm	2%	
	R....16	57.11.3302	3 kOhm	2%	
	R....17	57.11.3105	1 MOhm	2%	
	R....18	57.11.3683	68 kOhm	2%	
	R....19	57.11.3102	1 kOhm	2%	
	R....20	57.11.3472	4.7 kOhm	10%	
	R....21	57.11.3332	3.3 kOhm	10%	
	R....22	57.11.3105	1 MOhm	2%	
	R....23	57.11.3272	2.7 kOhm	2%	
	R....24	57.11.3223	22 kOhm	2%	
	R....25	57.11.3433	43 kOhm	2%	
	R....26		not used		
	R....27	57.11.3470	47 Ohm	2%	
	R....28	57.11.3334	330 kOhm	1%	
	R....29	57.11.3364	360 kOhm	1%	
	R....30	57.56.5470	47 Ohm	10%, 4W	
	R....31		not used	replaced by wire bridge	
	R....32		not used	replaced by wire bridge	
	R....33	57.19.0159	1.5 Ohm	5%, Fuse Resistor	
	R....34	57.11.3474	470 kOhm	10%	
	R....35	57.11.3474	470 kOhm	10%	
	R....36	57.11.3682	6.8 kOhm	10%	
	TP....2	54.02.0320	Testpoint		
	TP....3	54.02.0320	Testpoint		
	TP....4	54.02.0320	Testpoint		
	TP....5	54.02.0320	Testpoint		
	TP....6	54.02.0320	Testpoint		
	TP....7	54.02.0320	Testpoint		
	TP....8	54.02.0320	Testpoint		
	TP....9	54.02.0320	Testpoint		
	TP...10	54.02.0320	Testpoint		

IND.	POS.NO.	PART NO.	VALUE	SPECIFICATIONS / EQUIVALENT	MANUF.
(00)	C.....1	59.31.8105	1 uF	10%, 400V, MPETF	
	C.....1	59.14.3474	470 nF	20%, 300V, X2	
	C.....2	59.22.3221	220 uF	20%, 10V, El	
(00)	C.....3	59.31.8105	1 uF	10%, 400V, MPETF	
	C.....3	59.14.3474	470 nF	20%, 300V, X2	
	C.....4	59.22.6102	1000 uF	20%, 40V, El	
(00)	C.....5	59.31.8105	1 uF	10%, 400V, MPETF	
	C.....5	59.02.6105	1 uF	5%, 400V, MPC	
	C.....6	59.05.2102	1 nF	2.5%, 630V, PP	
	C.....7	59.06.0683	68 nF	10%, 63V, PETP	
(00)	C.....8	59.31.8105	1 uF	10%, 400V, MPETF	
	C.....8	59.02.6105	1 uF	5%, 400V, MPC	
	C.....9	59.06.0683	68 nF	10%, 63V, PETP	
	C....10	59.06.5105	1 uF	5%, 50V, PETP	
	C....11	59.06.3474	470 nF	5%, 63V, PETP	
	C....12	59.06.0683	68 nF	10%, 63V, PETP	
	DL....1	50.04.2107	555-2007	Led,red,dif	Di
	D.....2	70.01.0232	KBPC3502	1583-20 200 V / 35 A	IR,Symbol
	D.....3	50.04.0318	MR 754		Mot
	D.....4	50.04.0138	UF 4004	BY701-400/UES1106	SGS,Tho,GI,Un
	D.....5	50.04.0138	UF 4004	BY701-400/UES1106	SGS,Tho,GI,Un
	DV....1	50.04.1123	4.7 V Z	BZX55-C4V7	ITT,Mot,Ph,Tf,SGS,Tho
	DV....2	50.04.1108	5.6 V Z	BZX55-C5V6	ITT,Mot,Ph,Tf,SGS,Tho
	DV....3	50.04.1209	5.1 V Z	BZX85-C5V1	ITT,Mot,Ph,Tf,SGS,Tho
	DV....4	50.04.1209	5.1 V Z	BZX85-C5V1	ITT,Mot,Ph,Tf,SGS,Tho
	DV....5	50.04.1209	5.1 V Z	BZX85-C5V1	ITT,Mot,Ph,Tf,SGS,Tho
(00)	DV....6	50.04.1114	10 V Z	BZX55-C10	ITT,Mot,Ph,Tf,SGS,Tho
	DV....6	50.04.1103	7.5 V Z	BZX55-C7V5	ITT,Mot,Ph,Tf,SGS,Tho
	IC....1	50.04.2148	CNY65		Tf
	IC....2	50.05.0286	LM 358N	LM 358P	Mot,NS,SGS
	IC....3	50.07.1538	MC4538	BCF REF4070BP, CD4070BE	Mot,NS,Ph
	IC....4	50.07.0681	MC4081BCP	.TC4081BP. Mot,NS,Ph,RCA,SGS,Tho,To	
	IC....5	50.05.0283	LM 393P	LM393N, LM393DP	TI,NS,Tho

Note 1 - Connector,10 contacts:
case: Studer nr. 54.14.2001
Yamaichi nr. FAP-10-08-60SS
Burndy nr. BPH 9 B10 B00 GS
3M nr. 7610-6002 VZ
Pandult nr. 057.010.113

MPETF = Metall Polyesterfilm, PETF = Polyesterfilm, El = Electrolytic,
PP = Polypropylen, MPC=Metalized Polycarbonat.

MANUFACTURER: Di=Dialco, Fe=Ferranti, GI=General Instruments,
IR=International Rectifier, ITT=Intermetall, Mot=Motorola,
NS=National Semiconductors, Ph=Philips, RCA=Radio Corporation,
of America, SGS=SGS/Ates, Sie=Siemens, Six=Siliconix,
Tf=Telefunken, Tho=Thomson, TI=Texas Instruments, To=Toshiba,
Un=Unitrode.

ORIG 89/11/16

BLOCK DIAGRAM
FUSSE / SUPPLY FAILURE DETECTOR 1.820.866

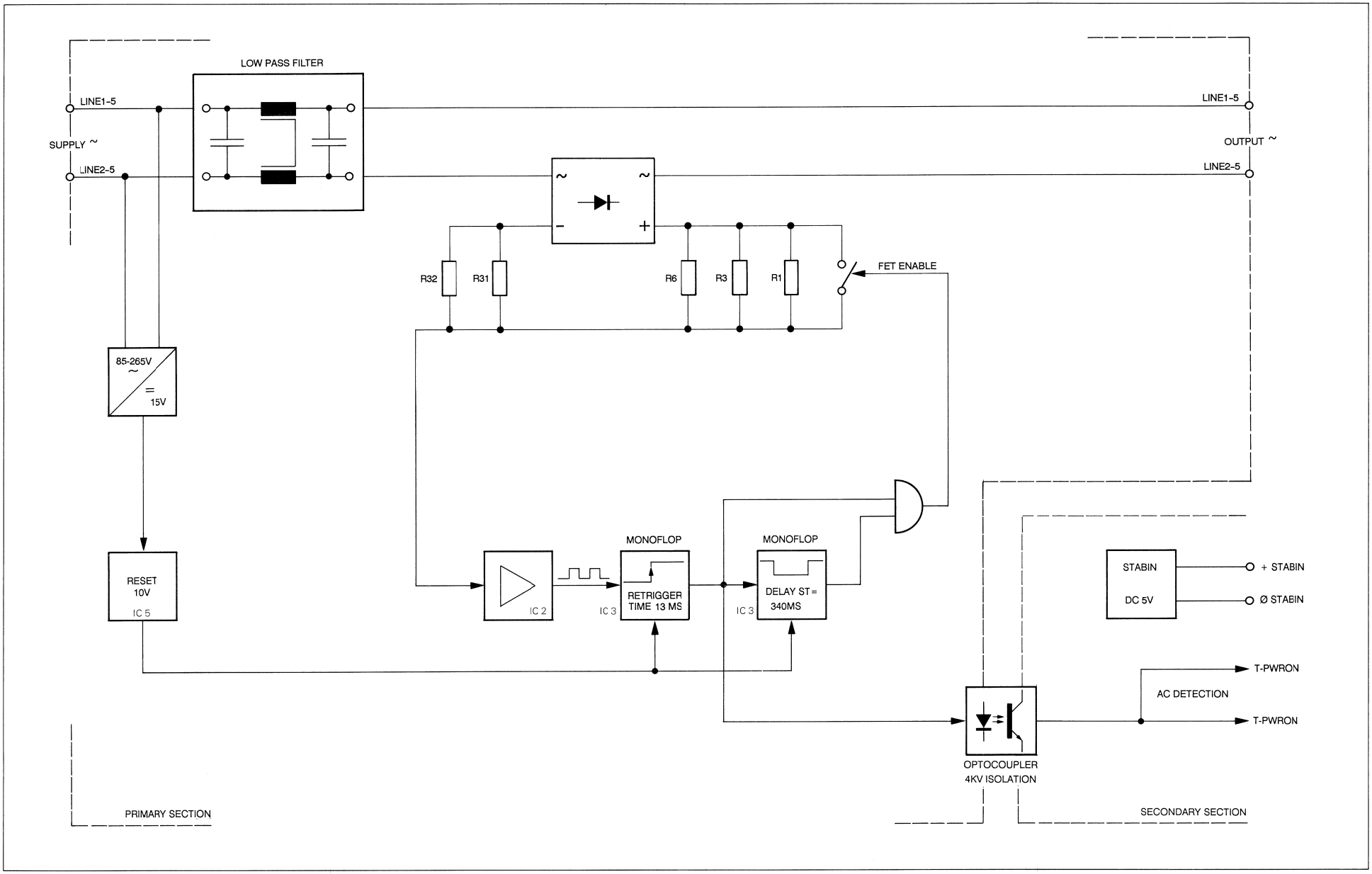

FUSSE / SUPPLY FAILURE DETECTOR 1.820.866.00

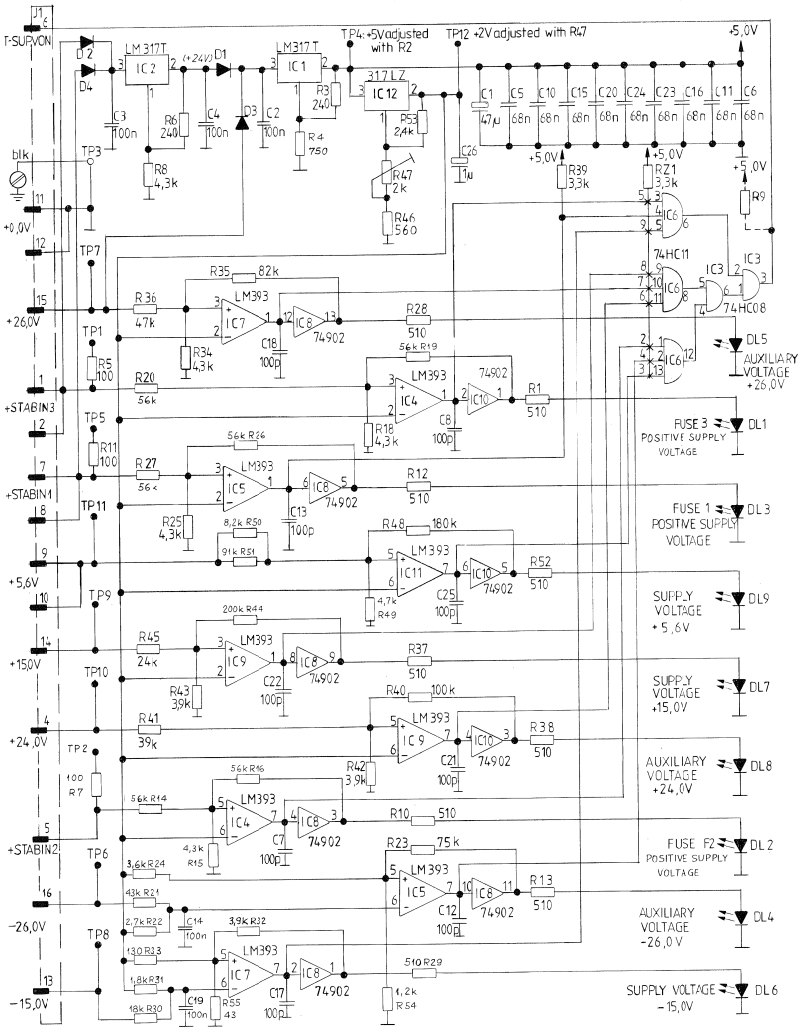

0 7.10.86 Buchegger			PAGE 1 OF 1
STUDER	A 820 Fuse / Supply Failure Detector	SC	1.820.866.00

FUSSE / SUPPLY FAILURE DETECTOR 1.820.866.00

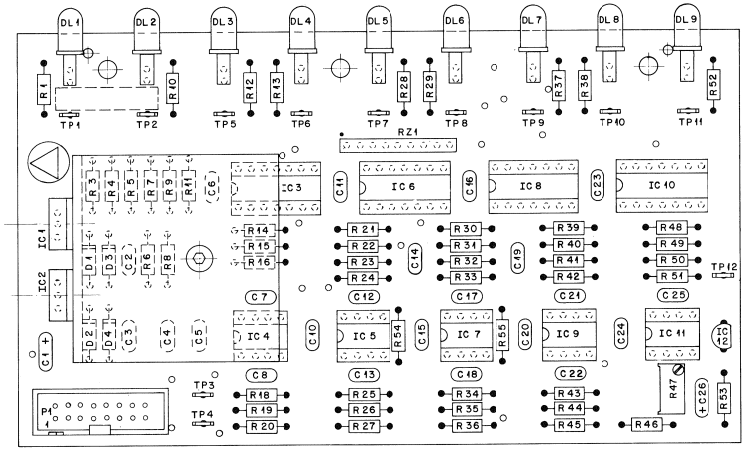

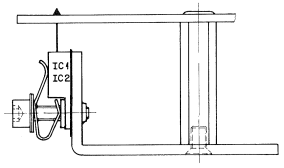

IND.	POS.NO.	PART NO.	VALUE	SPECIFICATIONS / EQUIVALENT	MANUF.
	C.....1	59.26.4470	47 uF	20%, 6.3 V+, Sal	Ph+Ri
	C.....2	59.06.0104	100 nF	10%, PETP	
	C.....3	59.06.0104	100 nF	10%, PETP	
	C.....4	59.06.0104	100 nF	10%, PETP	
	C.....5	59.06.0683	68 nF	20%, PETP	
	C.....6	59.06.0683	68 nF	20%, PETP	
	C.....7	59.34.4101	100 pF	10%, Cer	
	C.....8	59.34.4101	100 pF	10%, Cer	
	C.....9		not used		
	C.....10	59.06.0683	68 nF	20%, PETP	
	C.....11	59.06.0683	68 nF	20%, PETP	
	C.....12	59.34.4101	100 pF	10%, Cer	
	C.....13	59.34.4101	100 pF	10%, Cer	
	C.....14	59.06.0104	100 nF	10%, PETP	
	C.....15	59.06.0683	68 nF	20%, PETP	
	C.....16	59.06.0683	68 nF	20%, PETP	
	C.....17	59.34.4101	100 pF	10%, Cer	
	C.....18	59.34.4101	100 pF	10%, Cer	
	C.....19	59.06.0104	100 nF	10%, PETP	
	C.....20	59.06.0683	68 nF	20%, PETP	
	C.....21	59.34.4101	100 pF	10%, Cer	
	C.....22	59.34.4101	100 pF	10%, Cer	
	C.....23	59.06.0683	68 nF	20%, PETP	
	C.....24	59.06.0683	68 nF	20%, PETP	
	C.....25	59.34.4101	100 pF	10%, Cer	
	C.....26	59.26.9109	1 uF	20%, 6.3 V+, Sal	Ph+Ri
	D.....1	50.04.0122	1N 4001	... 1N 4004	Gi+Mot
	D.....2	50.04.0122	1N 4001	... 1N 4004	Gi+Mot
	D.....3	50.04.0122	1N 4001	... 1N 4004	Gi+Mot
	D.....4	50.04.0122	1N 4001	... 1N 4004	Gi+Mot
	DL....1	50.04.2113	MV 5453	CM 4-384 B+ HLMP-3507	Ms+CM+HP
	DL....2	50.04.2113	MV 5453	CM 4-384 B+ HLMP-3507	Ms+CM+HP
	DL....3	50.04.2113	MV 5453	CM 4-384 B+ HLMP-3507	Ms+CM+HP
	DL....4	50.04.2113	MV 5453	CM 4-384 B+ HLMP-3507	Ms+CM+HP
	DL....5	50.04.2113	MV 5453	CM 4-384 B+ HLMP-3507	Ms+CM+HP

IND.	POS.NO.	PART NO.	VALUE	SPECIFICATIONS / EQUIVALENT	MANUF.
	DL....6	50.04.2113	MV 5453	CM 4-384 B+ HLMP-3507	Ms+CM+HP
	DL....7	50.04.2113	MV 5453	CM 4-384 B+ HLMP-3507	Ms+CM+HP
	DL....8	50.04.2113	MV 5453	CM 4-384 B+ HLMP-3507	Ms+CM+HP
	DL....9	50.04.2113	MV 5453	CM 4-384 B+ HLMP-3507	Ms+CM+HP
	IC.....1	50.10.0104	LM 317 T	... KC+ ... SP	NS+Mot+SGS+Tho+TI
	IC.....2	50.10.0104	LM 317 T	... KC+ ... SP	NS+Mot+SGS+Tho+TI
	IC.....3	50.17.1308	74 HC 08		Ph+Mot+NS+RCA+To+TI
	IC.....4	50.05.0283	LM 393 N	LM 393 P	TI+NS
	IC.....5	50.05.0283	LM 393 N	LM 393 P	TI+NS
	IC.....6	50.17.1211	74 HC 11		Ph+Mot+NS+RCA+To+TI
	IC.....7	50.05.0283	LM 393 N	LM 393 P	TI+NS
	IC.....8	50.07.0702	74 C902 N		NS
	IC.....9	50.05.0283	LM 393 N	LM 393 P	TI+NS
	IC.....10	50.07.0702	74 C902 N		NS
	IC.....11	50.05.0283	LM 393 N	LM 393 P	TI+NS
	IC.....12	50.10.0108	LM 317 LZ		NS+Mot
	P.....1	54.14.2302		see note 1	
	R.....1	57.11.3511	510 Ohm	2%	
	R.....2		not used		
	R.....3	57.11.3741	240 Ohm	2%	
	R.....4	57.11.3751	750 Ohm	2%	
	R.....5	57.19.0101	100 Ohm	10%	
	R.....6	57.11.3241	240 Ohm	2%	
	R.....7	57.19.0101	100 Ohm	10%	
	R.....8	57.11.3432	4.3 kOhm	2%	
	R.....9		not used		
	R.....10	57.11.3511	510 Ohm	2%	
	R.....11	57.19.0101	100 Ohm	10%	
	R.....12	57.11.3511	510 Ohm	2%	
	R.....13	57.11.3511	510 Ohm	2%	
(00)	R.....14	57.11.3623	62 kOhm	2%	
(01)	R.....14	57.11.3563	56 kOhm	2%	
	R.....15	57.11.3432	4.3 kOhm	2%	
(00)	R.....16	57.11.3913	91 kOhm	2%	

IND.	POS.NO.	PART NO.	VALUE	SPECIFICATIONS / EQUIVALENT	MANUF.
(01)	R.....16	57.11.3563	56 kOhm	2%	
	R.....17		not used		
	R.....18	57.11.3432	4.3 kOhm	2%	
(00)	R.....19	57.11.3913	91 kOhm	2%	
(01)	R.....19	57.11.3563	56 kOhm	2%	
(00)	R.....20	57.11.3623	62 kOhm	2%	
(01)	R.....20	57.11.3563	56 kOhm	2%	
	R.....21	57.11.3433	43 kOhm	2%	
	R.....22	57.11.3272	2.7 kOhm	2%	
	R.....23	57.11.3753	75 kOhm	2%	
	R.....24	57.11.3362	3.6 kOhm	2%	
	R.....25	57.11.3432	4.3 kOhm	2%	
(00)	R.....26	57.11.3913	91 kOhm	2%	
(01)	R.....26	57.11.3563	56 kOhm	2%	
(00)	R.....27	57.11.3623	62 kOhm	2%	
(01)	R.....27	57.11.3563	56 kOhm	2%	
	R.....28	57.11.3511	510 Ohm	2%	
	R.....29	57.11.3511	510 Ohm	2%	
	R.....30	57.11.3183	18 kOhm	1%	
	R.....31	57.11.3182	1.8 kOhm	1%	
(00)	R.....32	57.11.3682	6.8 kOhm	1%	
(01)	R.....32	57.11.3392	3.9 kOhm	1%	
	R.....33	57.11.3131	130 Ohm	1%	
	R.....34	57.11.3432	4.3 kOhm	2%	
	R.....35	57.11.4823	82 kOhm	2%	
	R.....36	57.11.4473	47 kOhm	2%	
	R.....37	57.11.3511	510 Ohm	2%	
	R.....38	57.11.3511	510 Ohm	2%	
(00)	R.....39	57.11.3332	3.3 kOhm	10%	
(01)	R.....39	57.11.4332	3.3 kOhm	10%	
	R.....40	57.11.4104	100 kOhm	2%	
	R.....41	57.11.4393	39 kOhm	2%	
	R.....42	57.11.3392	3.9 kOhm	2%	
	R.....43	57.11.3392	3.9 kOhm	1%	
(00)	R.....44	57.11.3184	180 kOhm	1%	
(01)	R.....44	57.11.3204	200 kOhm	1%	
	R.....45	57.11.3243	24 kOhm	1%	

IND.	POS.NO.	PART NO.	VALUE	SPECIFICATIONS / EQUIVALENT	MANUF.
	R.....46	57.11.4561	560 Ohm	2%	
	R.....47	58.05.1202	2 kOhm	see note 2	
	R.....48	57.11.3184	180 kOhm	1%	
(00)	R.....49	57.11.3432	4.3 kOhm	1%	
(01)	R.....49	57.11.3472	4.7 kOhm	1%	
(00)	R.....50	57.11.3333	33 kOhm	1%	
(01)	R.....50	57.11.3822	8.2 kOhm	1%	
(00)	R.....51	57.11.3912	9.1 kOhm	1%	
(01)	R.....51	57.11.3913	91 kOhm	1%	
	R.....52	57.11.3511	510 Ohm	2%	
	R.....53	57.11.3242	2.4 kOhm	2%	
	R.....54	57.11.3122	1.2 kOhm	1%	
	R.....55	57.11.3430	43 Ohm	1%	
	RZ.....1	57.88.4332		see note 3	
	TP.....1	54.02.0320		Testpoint	
	TP.....2	54.02.0320		Testpoint	
	TP.....3	54.02.0320		Testpoint	
	TP.....4	54.02.0320		Testpoint	
	TP.....5	54.02.0320		Testpoint	
	TP.....6	54.02.0320		Testpoint	
	TP.....7	54.02.0320		Testpoint	
	TP.....8	54.02.0320		Testpoint	
	TP.....9	54.02.0320		Testpoint	
	TP.....10	54.02.0320		Testpoint	
	TP.....11	54.02.0320		Testpoint	
	TP.....12	54.02.0320		Testpoint	

(01) 15.12.86 Improved accuracy of voltage measurement.

Note 1 - Plug, 16 contacts: Yamaichi nr. FAP-16-08//4
Burndy nr. BPH 9 B 16 800 GS

Note 2 - 2 kOhm Potentiometer: Bourns nr. 3296 Y-1-202
Spectrol nr. 64 Y 202 T 000
Contelec nr. 183 WZ 202
Murata nr. PDT 3105 Y - 1 - 202

Note 3 - 8 * 3.3 kOhm Network: Sicovend nr. CO9 X 3.3 K J
Ineltro nr. R88 3.3 K 5%

Cer=Ceramic, PETP=Polyesterfilm, Sal=Solid aluminium.

MANFACTURER: CM=Chicago Miniatur, GI=General Instruments,
HP=Hewlet Packard, ITT=Intermetall, Mot=Motorola,
Ms=Ransanto, NS=National Semiconductors, Ph=Philips,
RCA=RCA Corporation of America, Ri=Rifa, SGS=SGS / Ates,
Sie=Siemens, Tho=Thomsen CSF, TI=Texas Instruments,
To=Toshiba.

ORIG 86/07/17 (01) 86/12/15

STABILIZER +15V /–15V 9A, 24V / 5A 1.820.871.00

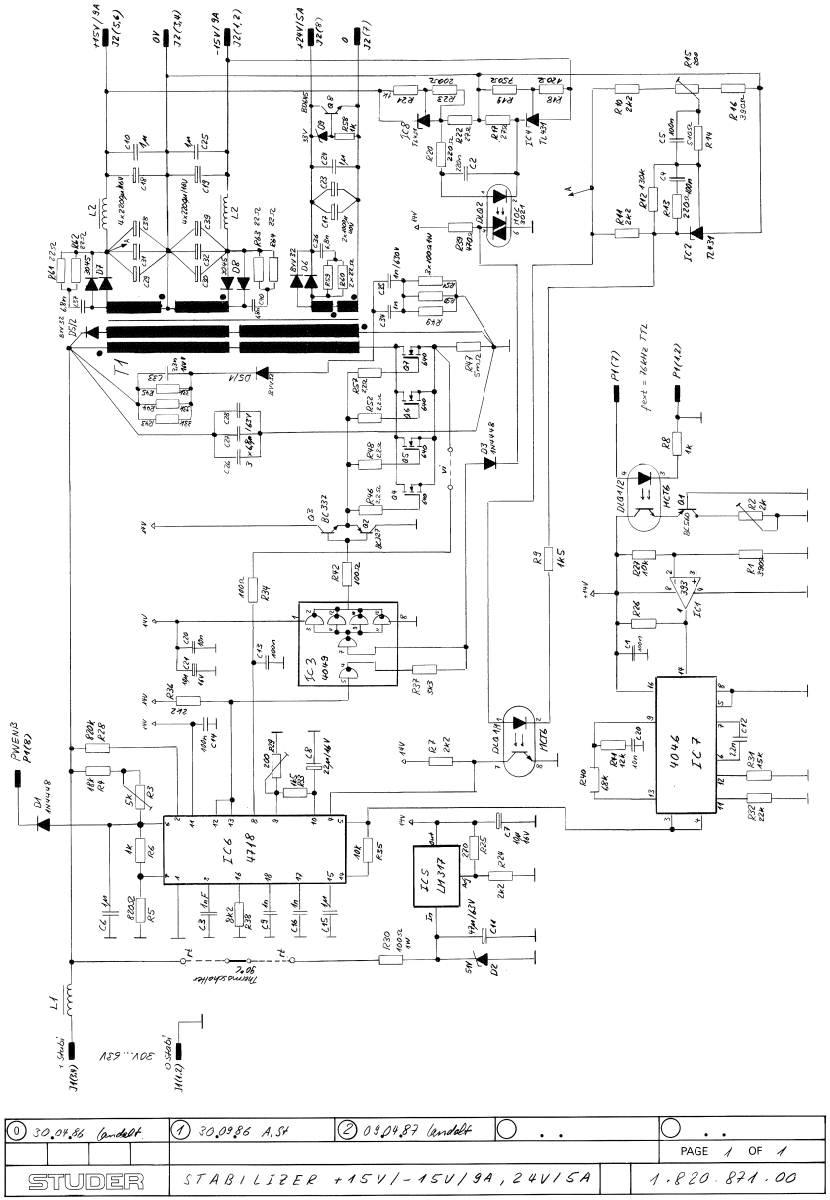

STABILIZER +15V /–15V 9A, 24V / 5A 1.820.871.00

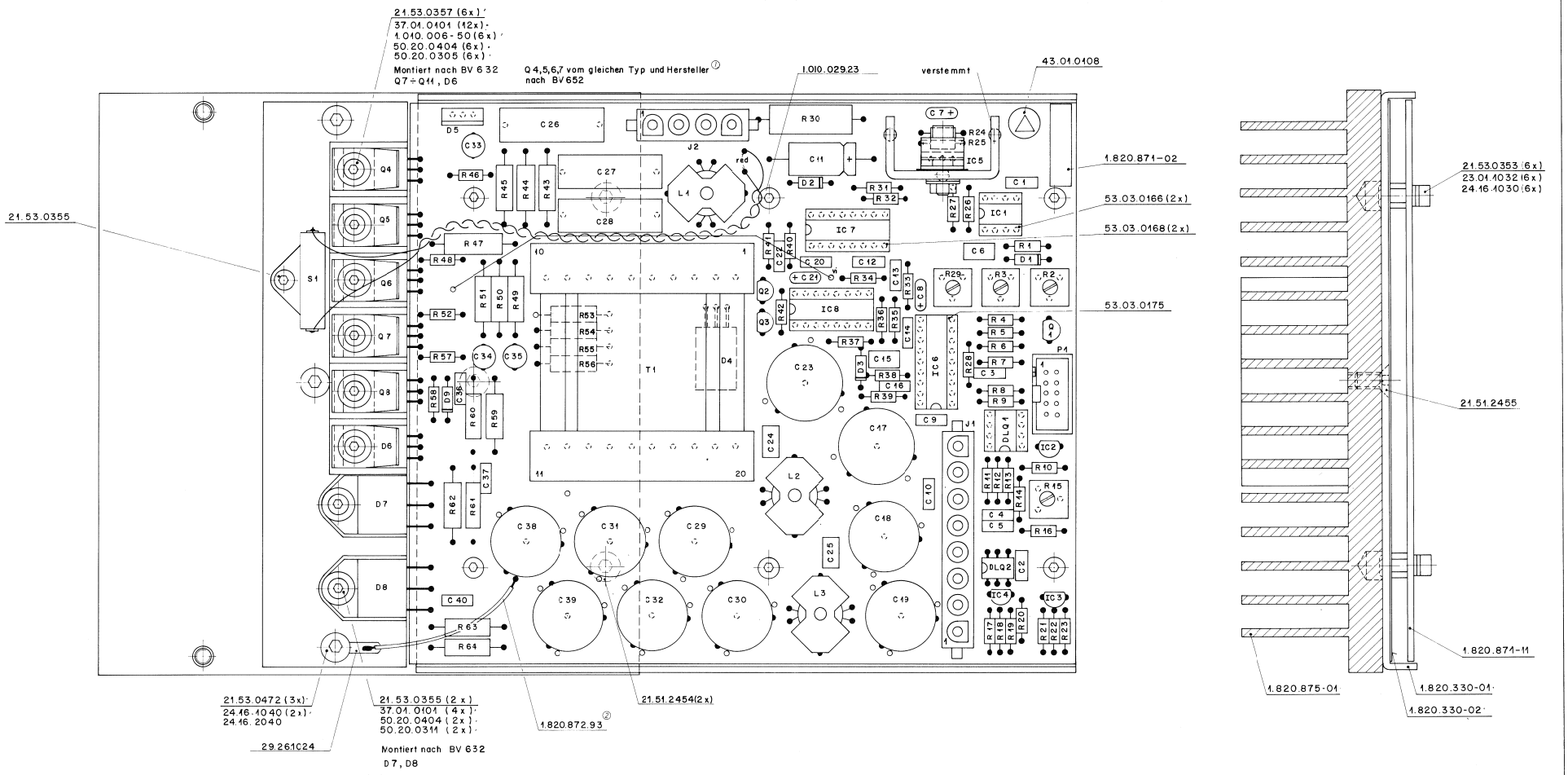

STABILIZER +15V /–15V 9A, 24V / 5A 1.820.871.00

IND.	POS.NO.	PART NO.	VALUE	SPECIFICATIONS / EQUIVALENT	MANUF.
	C.....1	59.06.0104	100 nF	10%, 63V, PETP	
	C.....2	59.06.0224	220 nF	10%, 63V, PETP	
	C.....3	59.06.0102	1 nF	10%, 63V, PETP	
	C.....4	59.06.0104	100 nF	10%, 63V, PETP	
	C.....5	59.06.0104	100 nF	10%, 63V, PETP	
	C.....6	59.06.0103	1 uF	10%, 50V, FETP	
	C.....7	59.26.2100	10 uF	20%, 16V, Sal	
	C.....8	59.26.1220	22 uF	20%, 10V, Sal	
	C.....9	59.06.0102	1 nF	10%, 63V, PETP	
	C....10	59.06.0105	1 uF	10%, 50V, PETP	
	C....11	59.25.6470	47 uF	50%, 63V, El	
	C....12	59.06.0222	2.2 nF	10%, 63V, PETP	
	C....13	59.06.0104	100 nF	10%, 63V, PETP	
	C....14	59.06.0104	100 nF	10%, 63V, PETP	
	C....15	59.06.0105	1 uF	10%, 50V, PETP	
	C....16	59.06.0102	1 nF	10%, 63V, PETP	
	C....17	59.28.4102	1000 uF	20%, 40V, El	
	C....18	59.28.2222	2200 uF	20%, 16V, El	
	C....19	59.28.2222	2200 uF	20%, 16V, El	
	C....20	59.06.0103	10 nF	10%, 63V, PETP	
	C....21	59.26.2100	10 uF	20%, 16V, Sal	
	C....22	59.06.0103	10 nF	10%, 63V, PETP	
	C....23	59.28.4102	1000 uF	20%, 40V, El	
	C....24	59.06.0105	1 uF	10%, 50V, PETP	
	C....25	59.06.0105	1 uF	10%, 50V, PETP	
	C....26	59.31.5685	6.8 uF	10%, 63V, MPETP	
	C....27	59.31.5685	6.8 uF	10%, 63V, MPETP	
	C....28	59.31.5685	6.8 uF	10%, 63V, MPETP	
	C....29	59.28.2222	2200 uF	20%, 16V, El	
	C....30	59.28.2222	2200 uF	20%, 16V, El	
	C....31	59.28.2222	2200 uF	20%, 16V, El	
	C....32	59.28.2222	2200 uF	20%, 16V, El	
	C....33	59.05.2332	3.3 nF	2.5%, 160V, PP	
	C....34	59.05.2102	1 nF	2.5%, 630V, PP	
	C....35	59.05.2102	1 nF	2.5%, 630V, PP	
	C....36	59.06.0682	6.8 nF	10%, 63V, PETP	
	C....37	59.06.0682	6.8 nF	10%, 63V, PETP	

IND.	POS.NO.	PART NO.	VALUE	SPECIFICATIONS / EQUIVALENT	MANUF.
	C....38	59.28.2222	2200 uF	20%, 16V, El	
	C....39	59.28.2222	2200 uF	20%, 16V, El	
	C....40	59.06.0682	6.8 nF	10%, 63V, PETP	
	D.....1	50.04.0125	1N 4448		Fc,ITT,Ph,Ses,Tf
	D.....2	50.04.1513	51 V Z	BZX 85 C 51	ITT,Mot,Ph,Tf,Tho
	D.....3	50.04.0125	1N 4448		Fc,ITT,Ph,Ses,Tf
	D.....4	50.04.0517	BYV 32-200		Mot,Ph
	D.....5	50.04.0517	BYV 32-200		Mot,Ph
	D.....6	50.04.0517	BYV 32-200		Mot,Ph
	D.....7	50.04.0520	MBR 3045PT	BYV 73-45	Mot,Ph
	D.....8	50.04.0520	MBR 3045PT	BYV 73-45	Mot,Ph
	D.....9	50.04.1127	33 V Z	BZX 55 C 33	ITT,Mot,Ph,Tf,Tho
	DLQ...1	50.99.0111	TLP 504 A		General Instruments only
	DLQ...2	50.04.2139	MOC 3021		Mot
	IC....1	50.05.0283	LM 393 ..		NS,Tho,TI
	IC....2	50.10.0106	TL 431 CLP		Mot,TI
	IC....3	50.10.0106	TL 431 CLP		Mot,TI
	IC....4	50.10.0106	TL 431 CLP		Mot,TI
	IC....5	50.10.0104	LM 317 SP	...T, ...KC	Mot,NS,SGS,Tho,TI
	IC....6	50.10.0111	TDA 4718 A	Q 67000 - Y639	Sie
	IC....7	50.07.0046	MC14046BPC	... 4046 ..	Mot,Ph,RCA
	IC....8	50.07.0049	HEF4049BP	TC 4049 BP	Ph,To
	J.....1	54.25.0008	8 cont.	AMP nr. 826851-3	
	J.....2	54.25.0004	4 cont.	AMP nr. 826848-3 or 826848-1	
	L.....1	64.01.0100		Double wire bridge 0.8 mm	St
	L.....2	1.022.295.00		Filter coil	St
	L.....3	1.022.295.00		Filter coil	St
	P.....1	54.14.2001	10 cont.	see note 1	
	Q.....1	50.03.0496	BC 560 E		Sie
	Q.....2	50.03.0351	BC 327-25		ITT,Ph,Sie

IND.	POS.NO.	PART NO.	VALUE	SPECIFICATIONS / EQUIVALENT	MANUF.
	Q.....3	50.03.0340	BC 337-25		ITT,Ph,Sie
(00)	Q.....4	50.03.1510	IFR 640	see note 5	IR,Six
(01)	Q.....4	50.03.1610	IFR 640	see note 5	IR
(00)	Q.....5	50.03.1510	IFR 640	see note 5	IR,Six
(01)	Q.....5	50.03.1610	IFR 640	see note 5	IR
(00)	Q.....6	50.03.1510	IFR 640	see note 5	IR,Six
(01)	Q.....6	50.03.1610	IFR 640	see note 5	IR
(00)	Q.....7	50.03.1510	IFR 640	see note 5	IR,Six
(01)	Q.....7	50.03.1610	IFR 640	see note 5	IR
	Q.....8	50.03.0460	2N 6387	BD 645	Ph,RCA,Sie
	R.....1	57.11.4391	390 Ohm	2%	
	R.....2	58.01.8202	2 kOhm	see note 2	
	R.....3	58.01.8502	5 kOhm	see note 3	
	R.....4	57.11.4183	18 kOhm	2%	
	R.....5	57.11.4821	820 Ohm	2%	
	R.....6	57.11.4102	1 kOhm	2%	
	R.....7	57.11.4222	2.2 kOhm	2%	
	R.....8	57.11.4102	1 kOhm	2%	
	R.....9	57.11.4152	1.5 kOhm	2%	
	R....10	57.11.4222	2.2 kOhm	2%	
	R....11	57.11.4222	2.2 kOhm	2%	
	R....12	57.11.3134	130 kOhm	1%	
	R....13	57.11.4221	220 Ohm	2%	
	R....14	57.11.3511	510 Ohm	1%	
	R....15	58.01.8201	200 Ohm	see note 4	
	R....16	57.11.4391	390 Ohm	2%	
	R....17	57.11.4270	27 Ohm	2%	
	R....18	57.11.3121	120 Ohm	1%	
	R....19	57.11.3751	750 Ohm	1%	
	R....20	57.11.4221	220 Ohm	2%	
	R....21	57.11.4102	1 kOhm	2%	
	R....22	57.11.4270	27 Ohm	2%	
	R....23	57.11.3201	200 Ohm	1%	
	R....24	57.11.4272	2.7 kOhm	2%	
	R....25	57.11.4271	270 Ohm	2%	
	R....26	57.11.4222	2.2 kOhm	2%	

IND.	POS.NO.	PART NO.	VALUE	SPECIFICATIONS / EQUIVALENT	MANUF.
	R....27	57.11.4103	10 kOhm	2%	
	R....28	57.11.4824	820 kOhm	2%	
	R....29	58.01.8201	200 Ohm	see note 4	
	R....30	57.56.5101	100 Ohm	10%	
	R....31	57.11.4153	15 kOhm	2%	
	R....32	57.11.4223	22 kOhm	2%	
	R....33	57.11.4152	1.5 kOhm	2%	
	R....34	57.11.4101	100 Ohm	2%	
	R....35	57.11.4103	10 kOhm	2%	
	R....36	57.11.4222	2.2 kOhm	2%	
	R....37	57.11.4332	3.3 kOhm	2%	
	R....38	57.11.4822	8.2 kOhm	2%	
	R....39	57.11.4471	470 Ohm	2%	
	R....40	57.11.4683	68 kOhm	2%	
	R....41	57.11.4123	12 kOhm	2%	
	R....42	57.11.4101	100 Ohm	2%	
	R....43	57.13.4333	33 kOhm	2%	
	R....44	57.13.4333	33 kOhm	2%	
	R....45	57.13.4333	33 kOhm	2%	
	R....46	57.11.4229	2.2 Ohm	2%	
	R....47	57.56.2005	5 mOhm	5%, 3 W, Low Inductance	
	R....48	57.11.4229	2.2 Ohm	2%	
	R....49	57.13.4101	100 Ohm	2%	
	R....50	57.13.4101	100 Ohm	2%	
	R....51	57.13.4101	100 Ohm	2%	
	R....52	57.11.4229	2.2 Ohm	2%	
	R....53		not used		
	R....54	57.13.4271	270 Ohm	2%	
	R....55	57.13.4271	270 Ohm	2%	
	R....56	57.13.4271	270 Ohm	2%	
	R....57	57.11.4229	2.2 Ohm	2%	
	R....58	57.11.4102	1 kOhm	2%	
	R....59	57.13.4220	22 Ohm	2%	
	R....60	57.13.4220	22 Ohm	2%	
	R....61	57.13.4220	22 Ohm	2%	
	R....62	57.13.4220	22 Ohm	2%	
	R....63	57.13.4220	22 Ohm	2%	

IND.	POS.NO.	PART NO.	VALUE	SPECIFICATIONS / EQUIVALENT	MANUF.
	R....64	57.13.4220	22 Ohm	2%	
	S.....1	55.19.0005		Thermo switch, Tokin nr. OHD 3 - 90 BU	
	T.....1	1.022.293.00		Switching power transformer, 2 * 15 V	St

(01) 87.02.02 Q 4/5/6/7 must be from the same type and manufacturer.

Note 1 - Connector, 10 contacts: Yamaichi nr. FAP-10-08-40 SS
Burndy nr. BPH 9 B 10 B 00 GS
3M nr. 7610-6002 VZ

Note 2 - Potentiometer, 2 kOhm: Bourns nr. 3386 F-1-202
A. Bradley nr. E 2 B 202
Spectrol nr. 63 M 202 T 010
Murata nr. POT 3104 F-1-202

Note 3 - Potentiometer, 5 kOhm: Bourns nr. 3386 F-1-502
A. Bradley nr. E 2 B 502
Spectrol nr. 63 M 502 T 010
Murata nr. POT 3104 F-1-502

Note 4 - Potentiometer, 200 Ohm: Bourns nr. 3386 F-1-201
A. Bradley nr. E 2 B 201
Spectrol nr. 63 M 201 T 010
Murata nr. POT 3104 F-1-201

Note 5 - All power transistors must be from the same type and manufacturer.

El=Electrolytic, MPETP=Metalized Polyesterfilm, PETP=Polyesterfilm,
PP=Polypropylene, Sal=Solid aluminium

MANUFACTURER: Fc=Fairchild, ITT=Intermetall, IR=International Rectifier,
Mot=Motorola, NS=National Semiconductors, Ph=Philips,
RCA=RCA Corp. of America, Ses=Sescosem, SGS=SGS/Ates,
Sie=Siemens, Six=Siliconix, St=Studer, Tf=Telefunken,
Tho=Thomson CSF, TI=Texas Instruments, To=Toshiba,
GI=General Instruments.

ORIG 86/10/20 (01) 87/02/02

BLOCK DIAGRAM
STABILIZER +15V / –15V 9A,24V / 5A 1.820.871.81

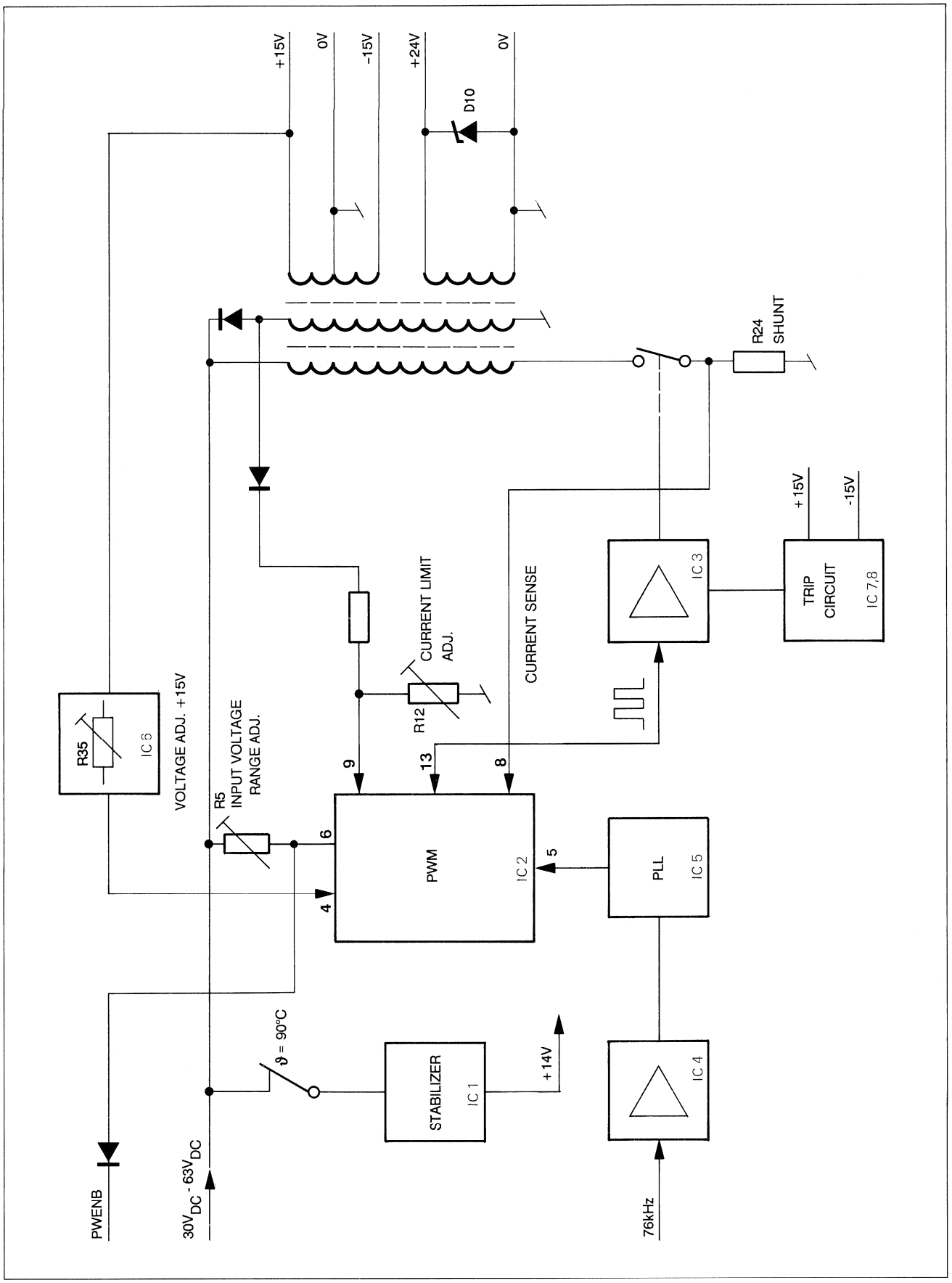

STABILIZER +15V /–15V 9A, 24V / 5A 1.820.871.81

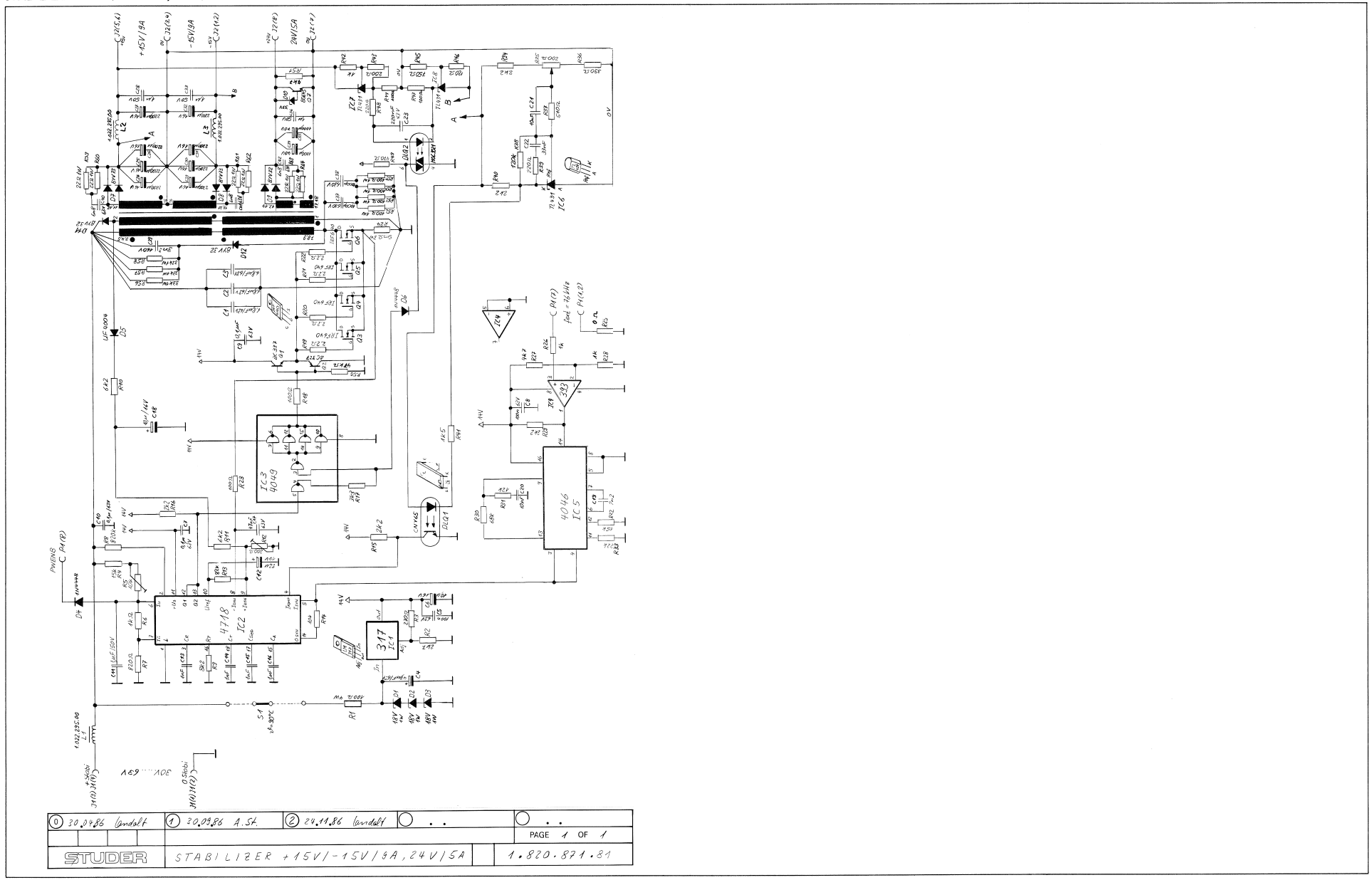

STABILIZER +15V /–15V 9A, 24V / 5A 1.820.871.81

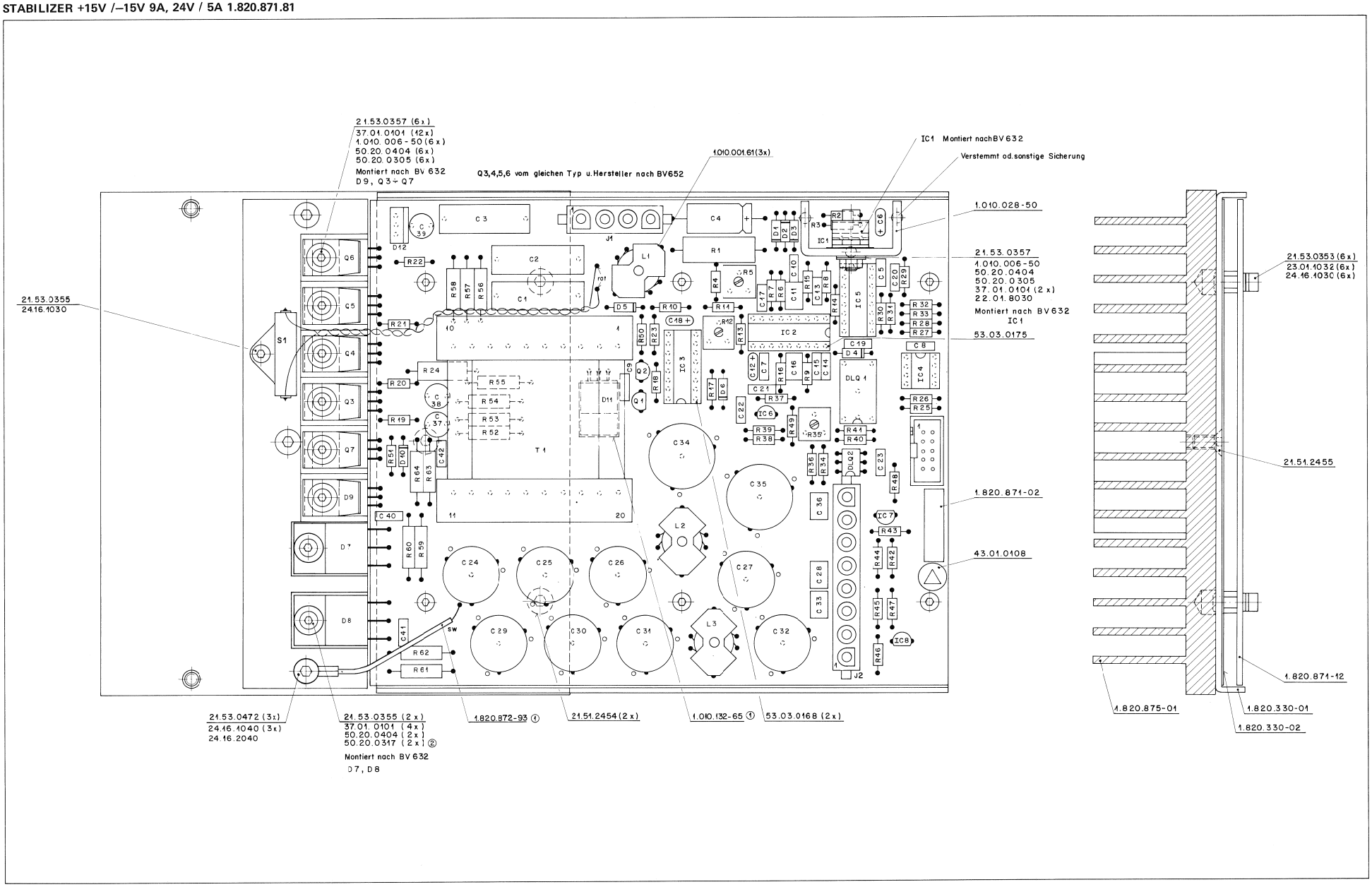

STABILIZER +15V /–15V 9A. 24V / 5A 1.820.871.81

IND.	POS.NO.	PART NO.	VALUE	SPECIFICATIONS / EQUIVALENT	MANUF.
	C....1	59.31.5685	6.8 uF	10%, 63V, MPETP	
	C....2	59.31.5685	6.8 uF	10%, 63V, MPETP	
	C....3	59.31.5685	6.8 uF	10%, 63V, MPETP	
	C....4	59.25.6470	47 uF	50%, 63V, El	
	C....5	59.06.0104	100 nF	10%, 63V, PETP	
	C....6	59.26.2100	10 uF	20%, 16V, Sal	
	C....7	59.06.0104	100 nF	10%, 63V, PETP	
	C....8	59.06.0104	100 nF	10%, 63V, PETP	
	C....9	59.06.0104	100 nF	10%, 63V, PETP	
	C....10	59.06.0104	100 nF	10%, 63V, PETP	
	C....11	59.06.0105	1 uF	10%, 50V, PETP	
	C....12	59.26.1220	22 uF	20%, 10V, Sal	
	C....13	59.06.0102	1 nF	10%, 63V, PETP	
	C....14	59.06.0102	1 nF	10%, 63V, PETP	
	C....15	59.06.0102	1 nF	10%, 63V, PETP	
	C....16	59.06.0105	1 uF	10%, 50V, PETP	
	C....17	59.06.0473	47 nF	10%, 63V, PETP	
	C....18	59.26.2100	10 uF	20%, 16V, Sal	
	C....19	59.06.0222	2.2 nF	10%, 63V, PETP	
	C....20	59.06.0103	10 nF	10%, 63V, PETP	
	C....21	59.06.0103	10 nF	10%, 63V, PETP	
	C....22	59.06.0333	33 nF	10%, 63V, PETP	
	C....23	59.06.0224	220 nF	10%, 63V, PETP	
	C....24	59.28.2222	2200 uF	20%, 16V, El	
	C....25	59.28.2222	2200 uF	20%, 16V, El	
	C....26	59.28.2222	2200 uF	20%, 16V, El	
	C....27	59.28.2222	2200 uF	20%, 16V, El	
	C....28	59.06.0105	1 uF	10%, 50V, PETP	
	C....29	59.28.2222	2200 uF	20%, 16V, El	
	C....30	59.28.2222	2200 uF	20%, 16V, El	
	C....31	59.28.2222	2200 uF	20%, 16V, El	
	C....32	59.28.2222	2200 uF	20%, 16V, El	
	C....33	59.06.0105	1 uF	10%, 50V, PETP	
	C....34	59.28.4102	1000 uF	20%, 40V, El	
	C....35	59.28.4102	1000 uF	20%, 40V, El	
	C....36	59.06.0105	1 uF	10%, 50V, PETP	
	C....37	59.05.2102	1 nF	2.5%, 630V, PP	

IND.	POS.NO.	PART NO.	VALUE	SPECIFICATIONS / EQUIVALENT	MANUF.
	C....38	59.05.2102	1 nF	2.5%, 630V, PP	
	C....39	59.05.2332	3.3 nF	2.5%, 160V, PP	
	C....40	59.06.0682	6.8 nF	10%, 63V, PETP	
	C....41	59.06.0682	6.8 nF	10%, 63V, PETP	
	C....42	59.06.0682	6.8 nF	10%, 63V, PETP	
	D....1	50.04.1222	18 V Z	18V, 5%, 1.3 W, BZX55 C18	ANY
	D....2	50.04.1222	18 V Z	18V, 5%, 1.3 W, BZX55 C18	ANY
	D....3	50.04.1222	18 V Z	18V, 5%, 1.3 W, BZX55 C18	ANY
	D....4	50.04.0125		1N4448	Fc,ITT,Ph,Sea,Tf
	D....5	50.04.0138		BYT01-400, UF4004	
	D....6	50.04.0125		1N4448	Fc,ITT,Ph,Sea,Tf
	D....7	50.04.0520		BYV 73-45, MBR 3045PT	Mot,Ph
	D....8	50.04.0520		BYV 73-45, MBR 3045PT	Mot,Ph
	D....9	50.04.0517		BYV 32-200	Mot,Ph
	D....10	50.04.1127	33 V Z	BZX 55 C 33	ITT,Mot,Ph,Tf,Tho
	D....11	50.04.0517		BYV 32-200	Mot,Ph
	D....12	50.04.0517		BYV 32-200	Mot,Ph
	DLQ...1	50.04.2148		CNY65	
	DLQ...2	50.04.2139		MOC 3021	Mot
	IC....1	50.10.0104		LM 317 SP ...T, ...KC	Mot,NS,SGS,Tho,TI
	IC....2	50.10.0111		TDA 4718 A Q 67000-Y639	Sie
	IC....3	50.07.0049	HEF4049BP	TC 4049 BP	Ph,To
	IC....4	50.05.0283		LM 393..	NS,Tho,TI
	IC....5	50.07.0046	MC14046BPC	... 4046 ..	Mot,Ph,RCA
	IC....6	50.10.0106		TL 431 CLP	Mot,TI
	IC....7	50.10.0106		TL 431 CLP	Mot,TI
	IC....8	50.10.0106		TL 431 CLP	Mot,TI
	J.....1	54.25.0004	4 cont.	AMP nr. 826848-3 or 826848-1	
	J.....2	54.25.0008	8 cont.	AMP nr. 826851-3	
(00)	L.....1	1.022.295.00		Filter coil	St
(03)	L.....1	1.022.295.81		Filter coil	St
(00)	L.....2	1.022.295.00		Filter coil	St

IND.	POS.NO.	PART NO.	VALUE	SPECIFICATIONS / EQUIVALENT	MANUF.
(03)	L.....2	1.022.295.81		Filter coil	St
(00)	L.....3	1.022.295.00		Filter coil	St
(03)	L.....3	1.022.295.81		Filter coil	St
	P.....1	54.14.2001	10 cont.	see note 1	
	Q.....1	50.03.0340	BC 337-25		ITT,Ph,Sie
	Q.....2	50.03.0351	BC 327-25		ITT,Ph,Sie
(00)	Q.....3	50.03.1510	IFR 640		IR,Six
(02)	Q.....3	50.03.1610	IFR 640		IR
(00)	Q.....4	50.03.1510	IFR 640		IR,Six
(02)	Q.....4	50.03.1610	IFR 640		IR
(00)	Q.....5	50.03.1510	IFR 640		IR,Six
(02)	Q.....5	50.03.1610	IFR 640		IR
(00)	Q.....6	50.03.1510	IFR 640		IR,Six
(02)	Q.....6	50.03.1610	IFR 640		IR
	Q.....7	50.03.0460	2N 6387	BD 645	Ph,RCA,Sie
	R.....1	57.56.5101	100 Ohm	10%	
	R.....2	57.11.4272	2.7 kOhm	2%	
	R.....3	57.11.4271	270 Ohm	2%	
	R.....4	57.11.4153	15 kOhm	2%	
	R.....5	58.01.8103	10 kOhm	see note 2	
	R.....6	57.11.4102	1 kOhm	2%	
	R.....7	57.11.4821	820 Ohm	2%	
	R.....8	57.11.4824	820 kOhm	2%	
	R.....9	57.11.4822	8.2 kOhm	2%	
	R....10	57.11.3622	6.2 kOhm	1%	
	R....11	57.11.3622	6.2 kOhm	1%	
	R....12	58.01.8201	200 Ohm	see note 3	
	R....13	57.11.4823	82 kOhm	2%	
	R....14	57.11.4103	10 kOhm	2%	
	R....15	57.11.4222	2.2 kOhm	2%	
	R....16	57.11.4222	2.2 kOhm	2%	
	R....17	57.11.4332	3.3 kOhm	2%	
	R....18	57.11.4101	100 Ohm	2%	
	R....19	57.11.4229	2.2 Ohm	2%	

IND.	POS.NO.	PART NO.	VALUE	SPECIFICATIONS / EQUIVALENT	MANUF.
	R....20	57.11.4229	2.2 Ohm	2%	
	R....21	57.11.4229	2.2 Ohm	2%	
	R....22	57.11.4229	2.2 Ohm	2%	
	R....23	57.11.4101	100 Ohm	2%	
	R....24	57.56.2005	5 mOhm	5%, 3 W, Low Inductance	
	R....25	57.11.4000	0 Ohm		
	R....26	57.11.4102	1 kOhm	2%	
	R....27	57.11.4562	5.6 kOhm	2%	
	R....28	57.11.4102	1 kOhm	2%	
	R....29	57.11.4222	2.2 kOhm	2%	
	R....30	57.11.4683	68 kOhm	2%	
	R....31	57.11.4123	12 kOhm	2%	
	R....32	57.11.4153	15 kOhm	2%	
	R....33	57.11.4223	22 kOhm	2%	
	R....34	57.11.4222	2.2 kOhm	2%	
	R....35	58.01.8201	200 Ohm	see note 3	
	R....36	57.11.4391	390 Ohm	2%	
	R....37	57.11.4471	470 Ohm	2%	
(01)	R....38	57.11.4124	120 kOhm	2%	
	R....39	57.11.4221	220 Ohm	2%	
	R....40	57.11.4222	2.2 kOhm	2%	
(00)	R....41	57.11.4152	1.5 kOhm	2%	
(01)	R....41	57.11.3132	1.3 kOhm	1%	
	R....42	57.11.3102	1 kOhm	1%	
	R....43	57.11.3201	200 Ohm	1%	
	R....44	57.11.4101	100 Ohm	2%	
	R....45	57.11.3751	750 Ohm	1%	
	R....46	57.11.3121	120 Ohm	1%	
	R....47	57.11.4101	100 Ohm	2%	
	R....48	57.11.4221	220 Ohm	2%	
	R....49	57.11.4823	82 kOhm	2%	
	R....50	57.11.4473	47 kOhm	2%	
	R....51	57.11.4472	4.7 kOhm	2%	
	R....52	57.13.4101	100 Ohm	2%	
	R....53	57.13.4101	100 Ohm	2%	
	R....54	57.13.4101	100 Ohm	2%	
	R....55	57.13.4101	100 Ohm	2%	

IND.	POS.NO.	PART NO.	VALUE	SPECIFICATIONS / EQUIVALENT	MANUF.
	R....56	57.13.4333	33 kOhm	2%	
	R....57	57.13.4333	33 kOhm	2%	
	R....58	57.13.4333	33 kOhm	2%	
	R....59	57.13.4220	22 Ohm	2%	
	R....60	57.13.4220	22 Ohm	2%	
	R....61	57.13.4220	22 Ohm	2%	
	R....62	57.13.4220	22 Ohm	2%	
	R....63	57.13.4220	22 Ohm	2%	
	R....64	57.13.4220	22 Ohm	2%	
	S.....1	55.19.0005		Thermo switch, Tokin nr. OHD 3 - 90 BU	
	T.....1	1.022.293.00		Switching power transformer, 2 * 15 V	St

(02) 19.10.87 Q 3/4/5/6 must be from the same type and manufacturer.

(03) 22.02.88 Extended current range.

Note 1 - Connector, 10 contacts: Yamaichi nr. FAP-10-08-40 SS
Burndy nr. BPH 9 B 10 B 00 GS
3M nr. 7610-6002 VZ

Note 2 - Potentiometer, 10 kOhm: Bourns nr. 3386 F-1-103
A. Bradley nr. E 2 B 103
Spectrol nr. 63 M 103 T 010
Murata nr. POT 3104 F-1-103

Note 3 - Potentiometer, 200 Ohm: Bourns nr. 3386 F-1-201
A. Bradley nr. E 2 B 201
Spectrol nr. 63 M 201 T 010
Murata nr. POT 3104 F-1-201

El=Electrolytic, MPETP=Metalized Polyesterfilm, PETP=Polyesterfilm,
PP=Polypropylene, Sal=Solid aluminium

MANUFACTURER: Fc=Fairchild, ITT=Internetall, IR=International Rectifier,
Mot=Motorola, NS=National Semiconductors, Ph=Philips,
RCA=RCA Corp. of America, Sea=Seacosem, SGS=SGS/Ates,
Sie=Siemens, Six=Siliconix, St=Studer, Tf=Telefunken,
Tho=Thomson CSF, TI=Texas Instruments, To=Toshiba,
GI=General Instruments.

ORIG 87/05/04 (01) 87/06/03 (02) 87/10/19 (03) 88/02/22

STABILIZER +5,6V/± 26V/+24V 1.820.872.00

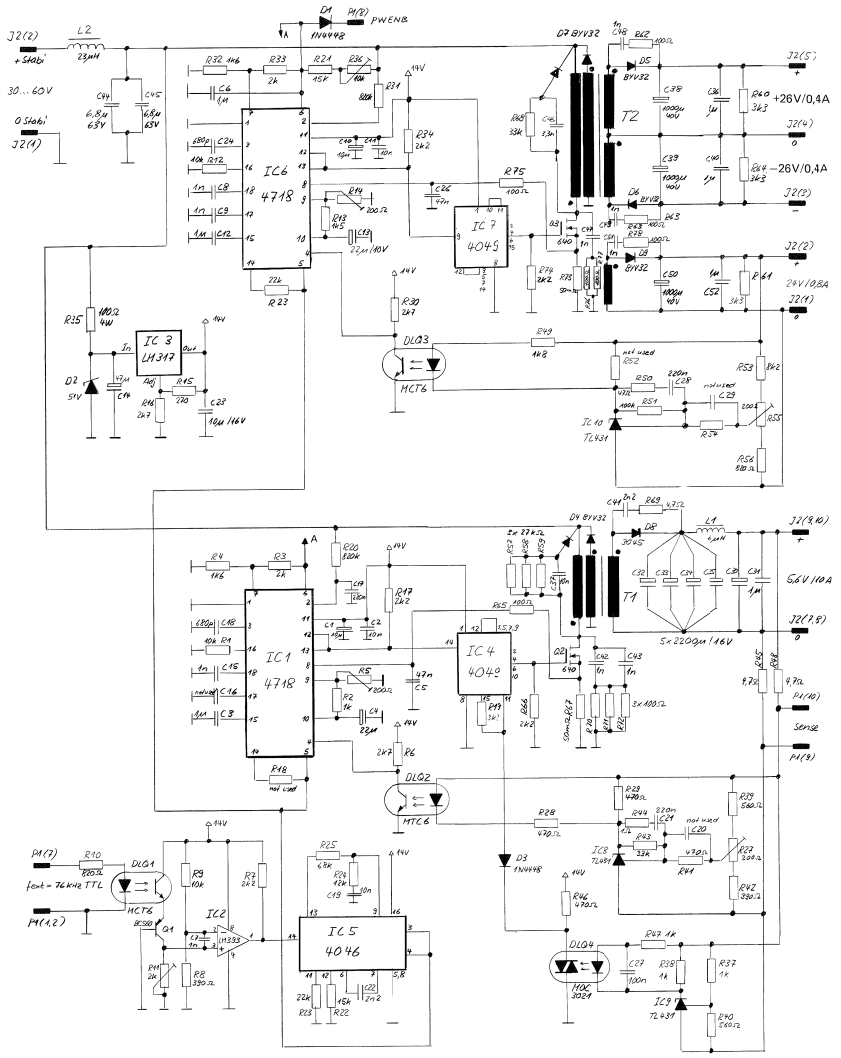

⓪ 05.12.85 Landolt	① 09.09.86 Landolt	② 0904.87 Landolt	. .	. .
				PAGE 1 OF 1
STUDER	STABILIZER 5V, AUX VOLTAGES			1.820.872.00

STABILIZER +5,6V/±26V/+24V 1.820.872.00

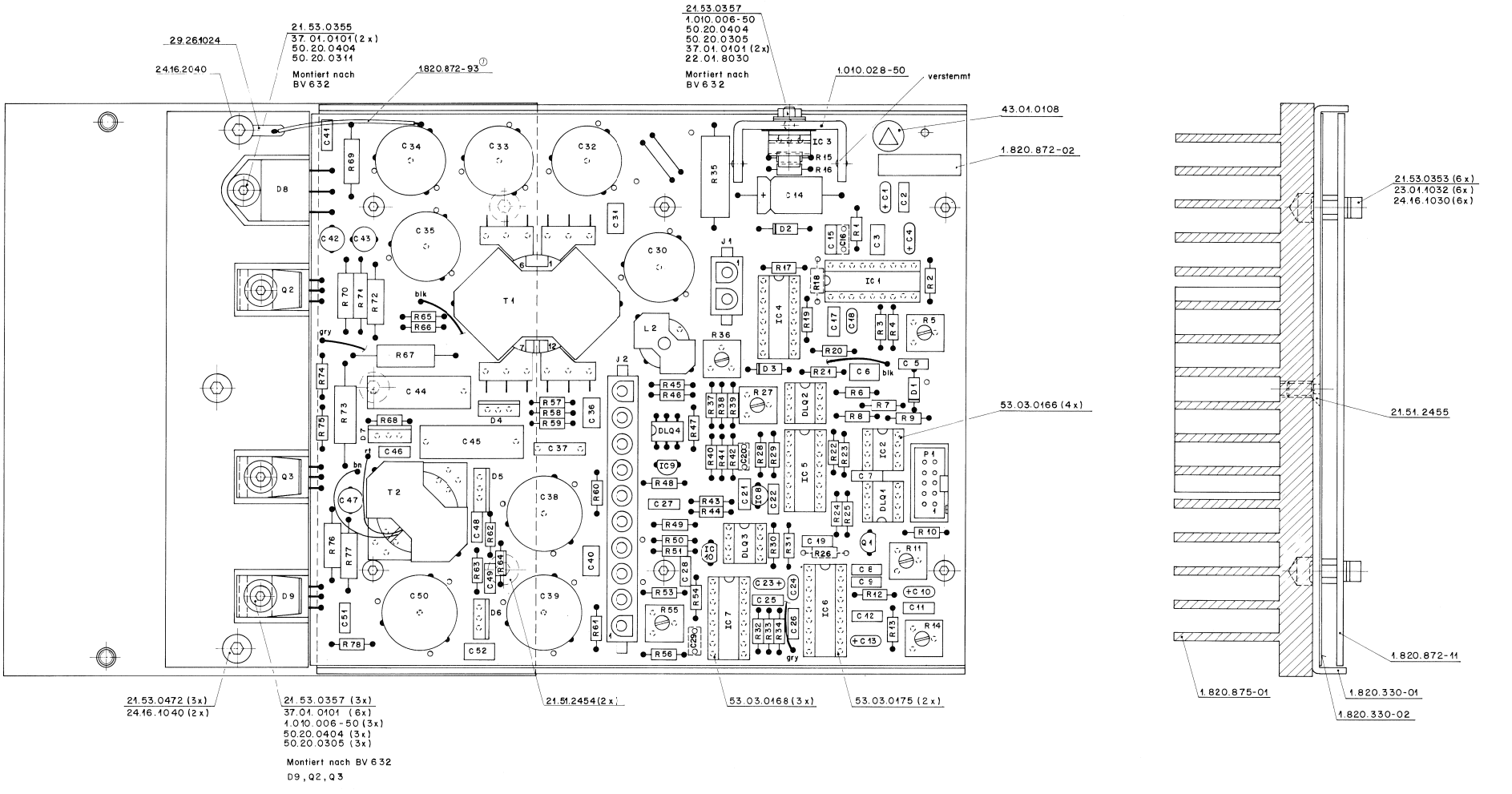

STABILIZER +5,6V/± 26V/+24V 1.820.872.00

IND.	POS.NO.	PART NO.	VALUE	SPECIFICATIONS / EQUIVALENT	MANUF.
	C.....1	59.26.2100	10 uF	20%, 16V, Sal	
	C.....2	59.06.0103	10 nF	10%, 63V, PETP	
	C.....3	59.06.0105	1 uF	10%, 50V, PETP	
	C.....4	59.26.1220	22 uF	20%, 10V, Sal	
	C.....5	59.06.0473	47 nF	10%, 63V, PETP	
	C.....6	59.06.0105	1 uF	10%, 50V, PETP	
	C.....7	59.06.0102	1 nF	10%, 63V, PETP	
	C.....8	59.06.0102	1 nF	10%, 63V, PETP	
	C.....9	59.06.0102	1 nF	10%, 63V, PETP	
	C....10	59.26.2100	10 uF	20%, 16V, Sal	
	C....11	59.06.0103	10 nF	10%, 63V, PETP	
	C....12	59.06.0105	1 uF	10%, 50V, PETP	
	C....13	59.26.1220	22 uF	20%, 10V, Sal	
	C....14	59.25.6470	47 uF	20%, 63V, El	
	C....15	59.06.0102	1 nF	10%, 63V, PETP	
	C....16		not used		
	C....17	59.06.0224	220 nF	10%, 63V, PETP	
	C....18	59.32.2681	680 pF	10%, 63V, PETP	
	C....19	59.06.0103	10 nF	10%, 63V, PETP	
	C....20		not used		
	C....21	59.06.0224	220 nF	10%, 63V, PETP	
	C....22	59.06.0222	2.2 nF	10%, 63V, PETP	
	C....23	59.26.2100	10 uF	20%, 16V, Sal	
	C....24	59.32.2681	680 pF	10%, 63V, PETP	
	C....25	59.06.0103	10 nF	10%, 63V, PETP	
	C....26	59.06.0473	47 nF	10%, 63V, PETP	
	C....27	59.06.0104	100 nF	10%, 63V, PETP	
	C....28	59.06.0224	220 nF	10%, 63V, PETP	
	C....29		not used		
	C....30	59.28.2222	2200 uF	20%, 16V, El	
	C....31	59.06.0105	1 uF	10%, 50V, PETP	
	C....32	59.28.2222	2200 uF	20%, 16V, El	
	C....33	59.28.2222	2200 uF	20%, 16V, El	
	C....34	59.28.2222	2200 uF	20%, 16V, El	
	C....35	59.28.2222	2200 uF	20%, 16V, El	
	C....36	59.06.0105	1 uF	10%, 50V, PETP	
	C....37	59.31.7103	10 nF	10%, 160V, PETP	

IND.	POS.NO.	PART NO.	VALUE	SPECIFICATIONS / EQUIVALENT	MANUF.
	C....38	59.28.4102	1 nF	20%, 40V, El	
	C....39	59.28.4102	1 nF	20%, 40V, El	
	C....40	59.06.0105	1 uF	10%, 50V, PETP	
	C....41	59.06.0222	2.2 nF	10%, 63V, PETP	
	C....42	59.05.2102	1 nF	2.5%, 630V, PP	
	C....43	59.05.2102	1 nF	2.5%, 630V, PP	
	C....44	59.31.5685	6.8 uF	10%, 63V, MPETP	
	C....45	59.31.5685	6.8 uF	10%, 63V, MPETP	
	C....46	59.06.0332	3.3 nF	10%, 63V, PETP	
	C....47	59.05.2102	1 nF	2.5%, 630V, PP	
	C....48	59.06.0102	1 nF	10%, 63V, PETP	
	C....49	59.06.0102	1 nF	10%, 63V, PETP	
	C....50	59.28.4102	1 nF	20%, 40V, El	
	C....51	59.06.0102	1 nF	10%, 63V, PETP	
	C....52	59.06.0105	1 uF	10%, 50V, PETP	
	D.....1	50.04.0125	1N 4448		Fc,ITT,Ph,Ses,Tf
	D.....2	50.04.1513	51 V Z	BZX 85 C 51	ITT,Mot,Ph,Tf,Tho
	D.....3	50.04.0125	1N 4448		Fc,ITT,Ph,Ses,Tf
	D.....4	50.04.0517	BYV 32-200		Mot,Ph
	D.....5	50.04.0517	BYV 32-200		Mot,Ph
	D.....6	50.04.0517	BYV 32-200		Mot,Ph
	D.....7	50.04.0517	BYV 32-200		Mot,Ph
	D.....8	50.04.0520	MBR 3045PT	BYV 73-45	Mot,Ph
	D.....9	50.04.0517	BYV 32-200		Mot,Ph
	DLQ...1	50.99.0111	TLP 504 A		To
	DLQ...2	50.99.0111	TLP 504 A		GI only
	DLQ...3	50.99.0111	TLP 504 A		GI only
	DLQ...4	50.04.2139	MOC 3021		Mot
	IC....1	50.10.0111	TDA 4718 A	Q 67000 - Y639	Sie
	IC....2	50.05.0283	LM 393 ..		NS,Tho,TI
	IC....3	50.10.0104	LM 317 SP	...T, ...KC	Mot,NS,SGS,Tho,TI
	IC....4	50.07.0049	HEF4049BP	TC 4049 BP	Ph,To
	IC....5	50.07.0046	MC14046BPC	... 4046 ..	Mot,Ph,RCA
	IC....6	50.10.0111	TDA 4718 A	Q 67000 - Y639	Sie

IND.	POS.NO.	PART NO.	VALUE	SPECIFICATIONS / EQUIVALENT	MANUF.
	IC....7	50.07.0049	HEF4049BP	TC 4049 BP	Ph,To
	IC....8	50.10.0106	TL 431 CLP		Mot,TI
	IC....9	50.10.0106	TL 431 CLP		Mot,TI
	IC...10	50.10.0106	TL 431 CLP		Mot,TI
	J.....1	54.25.0002	2 cont.	AMP nr. 826846-3	
	J.....2	54.25.0010	10 cont.	AMP nr. 826852-3	
	L.....1		not used		
	L.....2	1.022.296.00		Filter coil, 23 uH	St
	P.....1	54.14.2001	10 cont.	see note 1	
	Q.....1	50.03.0496	BC 560 E		Sie
	Q.....2	50.03.1510	IFR 640		IR,Six
	Q.....3	50.03.1510	IFR 640		IR,Six
	R.....1	57.11.4103	10 kOhm	2%	
	R.....2	57.11.4102	1 kOhm	2%	
	R.....3	57.11.3202	2 kOhm	1%	
	R.....4	57.11.3162	1.6 kOhm	1%	
	R.....5	58.01.8201	200 Ohm	see note 2	
	R.....6	57.11.4272	2.7 kOhm	2%	
	R.....7	57.11.4222	2.2 kOhm	2%	
	R.....8	57.11.4391	390 Ohm	2%	
	R.....9	57.11.4103	10 kOhm	2%	
	R....10	57.11.4821	820 Ohm	2%	
	R....11	58.01.8202	2 kOhm	see note 3	
	R....12	57.11.4103	10 kOhm	2%	
	R....13	57.11.4152	1.5 kOhm	2%	
	R....14	58.01.8201	200 Ohm	see note 2	
	R....15	57.11.4271	270 Ohm	2%	
	R....16	57.11.4272	2.7 kOhm	2%	
	R....17	57.11.4222	2.2 kOhm	2%	
	R....18		not used		
	R....19	57.11.4332	3.3 kOhm	2%	
	R....20	57.11.4824	820 kOhm	2%	

IND.	POS.NO.	PART NO.	VALUE	SPECIFICATIONS / EQUIVALENT	MANUF.
	R....21	57.11.4153	15 kOhm	2%	
	R....22	57.11.4153	15 kOhm	2%	
	R....23	57.11.4223	22 kOhm	2%	
	R....24	57.11.4123	12 kOhm	2%	
	R....25	57.11.4683	68 kOhm	2%	
	R....26		not used		
	R....27	58.01.8201	200 Ohm	see note 2	
	R....28	57.11.4471	470 Ohm	2%	
	R....29	57.11.4471	470 Ohm	2%	
	R....30	57.11.4272	2.7 kOhm	2%	
	R....31	57.11.4824	820 kOhm	2%	
	R....32	57.11.3162	1.6 kOhm	1%	
	R....33	57.11.3202	2 kOhm	1%	
	R....34	57.11.4222	2.2 kOhm	2%	
	R....35	57.56.5101	100 Ohm	10%, 4 W	
	R....36	58.01.8103	10 kOhm	see note 4	
	R....37	57.11.4102	1 kOhm	2%	
	R....38	57.11.4102	1 kOhm	2%	
	R....39	57.11.4561	560 Ohm	2%	
	R....40	57.11.4561	560 Ohm	1%	
	R....41	57.11.4471	470 Ohm	2%	
	R....42	57.11.4391	390 Ohm	2%	
	R....43	57.11.4333	33 kOhm	2%	
	R....44	57.11.4109	1 Ohm	2%	
	R....45	57.11.4479	4.7 Ohm	2%	
	R....46	57.11.4471	470 Ohm	2%	
	R....47	57.11.4102	1 kOhm	2%	
	R....48	57.11.4479	4.7 Ohm	2%	
	R....49	57.11.4182	1.8 kOhm	2%	
	R....50	57.11.4470	47 Ohm	2%	
	R....51	57.11.4104	100 kOhm	2%	
	R....52		not used		
	R....53	57.11.4822	8.2 kOhm	2%	
	R....54	57.11.4471	470 Ohm	2%	
	R....55	58.01.8201	200 Ohm	see note 2	
	R....56	57.11.4821	820 Ohm	2%	
	R....57	57.11.4273	27 kOhm	2%	

IND.	POS.NO.	PART NO.	VALUE	SPECIFICATIONS / EQUIVALENT	MANUF.
	R....58	57.11.4273	27 kOhm	2%	
	R....59	57.11.4273	27 kOhm	2%	
	R....60	57.11.4332	3.3 kOhm	2%	
	R....61	57.11.4332	3.3 kOhm	2%	
	R....62	57.11.4101	100 Ohm	2%	
	R....63	57.11.4101	100 Ohm	2%	
	R....64	57.11.4332	3.3 kOhm	2%	
	R....65	57.11.4101	100 Ohm	2%	
	R....66	57.11.4222	2.2 kOhm	2%	
	R....67	57.56.2050	50 mOhm	5%, 3 W, Low Inductance	
	R....68	57.11.4333	33 kOhm	2%	
	R....69	57.13.4479	4.7 Ohm	2%	
	R....70	57.13.4101	100 Ohm	2%	
	R....71	57.13.4101	100 Ohm	2%	
	R....72	57.13.4101	100 Ohm	2%	
	R....73	57.56.2050	50 mOhm	5%, 3 W, Low Inductance	
	R....74	57.11.4222	2.2 kOhm	2%	
	R....75	57.11.4101	100 Ohm	2%	
	R....76	57.13.4101	100 Ohm	2%	
	R....77	57.13.4101	100 Ohm	2%	
	R....78	57.11.4101	100 Ohm	2%	
	T.....1	1.022.291.00		Switching power transformer, 5.6V	St
	T.....2	1.022.292.00		Switching power transformer, AUX	St

Note 1 - Connector, 10 contacts: Yamaichi nr. FAP-10-08-40 SS
Burndy nr. BPH 9 B 10 B 00 GS
3M nr. 7610-6002 VZ

Note 2 - Potentiometer, 200 Ohm: Bourns nr. 3386 F-1-201
A. Bradley nr. E 2 B 201
Spectrol nr. 63 M 201 T 010
Murata nr. POT 3104 F-1-201

Note 3 - Potentiometer, 2 kOhm: Bourns nr. 3386 F-1-202
A. Bradley nr. E 2 B 202
Spectrol nr. 63 M 202 T 010
Murata nr. POT 3104 F-1-202

Note 4 - Potentiometer, 10 kOhm: Bourns nr. 3386 F-1-103
A. Bradley nr. E 2 B 103
Spectrol nr. 63 M 103 T 010
Murata nr. POT 3104 F-1-103

El=Electrolytic, MPETP=Metalized Polyesterfilm, PETP=Polyesterfilm,
PP=Polypropylene, Sal=Solid aluminium

MANUFACTURER: Fc=Fairchild, ITT=Intermetall, IR=International Rectifier,
Mot=Motorola, NS=National Semiconductors, Ph=Philips,
RCA=RCA Corp. of America, Ses=Seecosem, SGS=SGS/Ates,
Sie=Siemens, Six=Siliconix, St=Studer, Tf=Telefunken,
Tho=Thomson CSF, TI=Texas Instruments, To=Toshiba,
GI=General Instruments.

ORIG 86/10/20

BLOCK DIAGRAM
STABILIZER +5,6V/± 26V/+24V 1.820.872.81

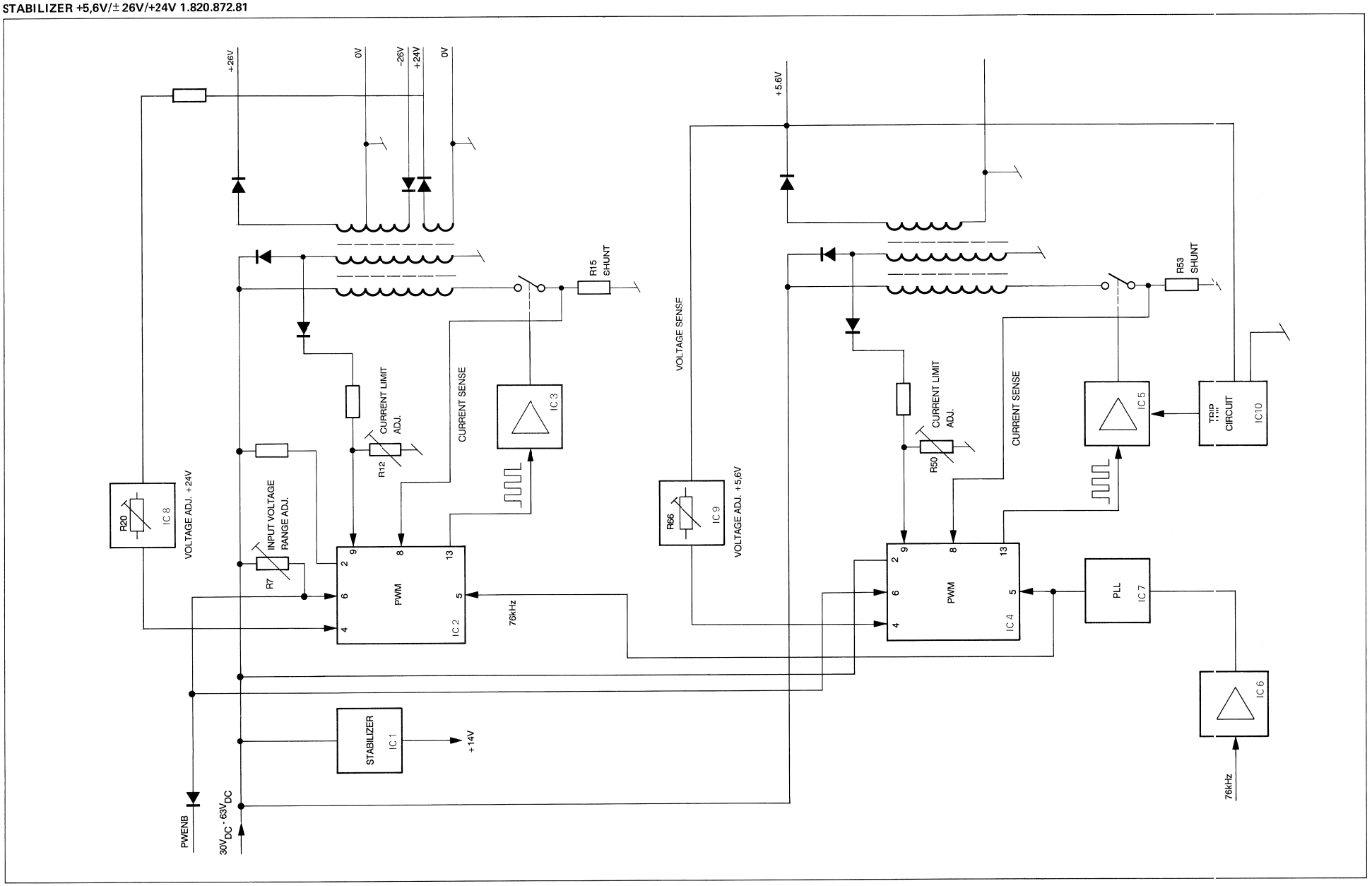

STABILIZER +5,6V/± 26V/+24V 1.820.872.81

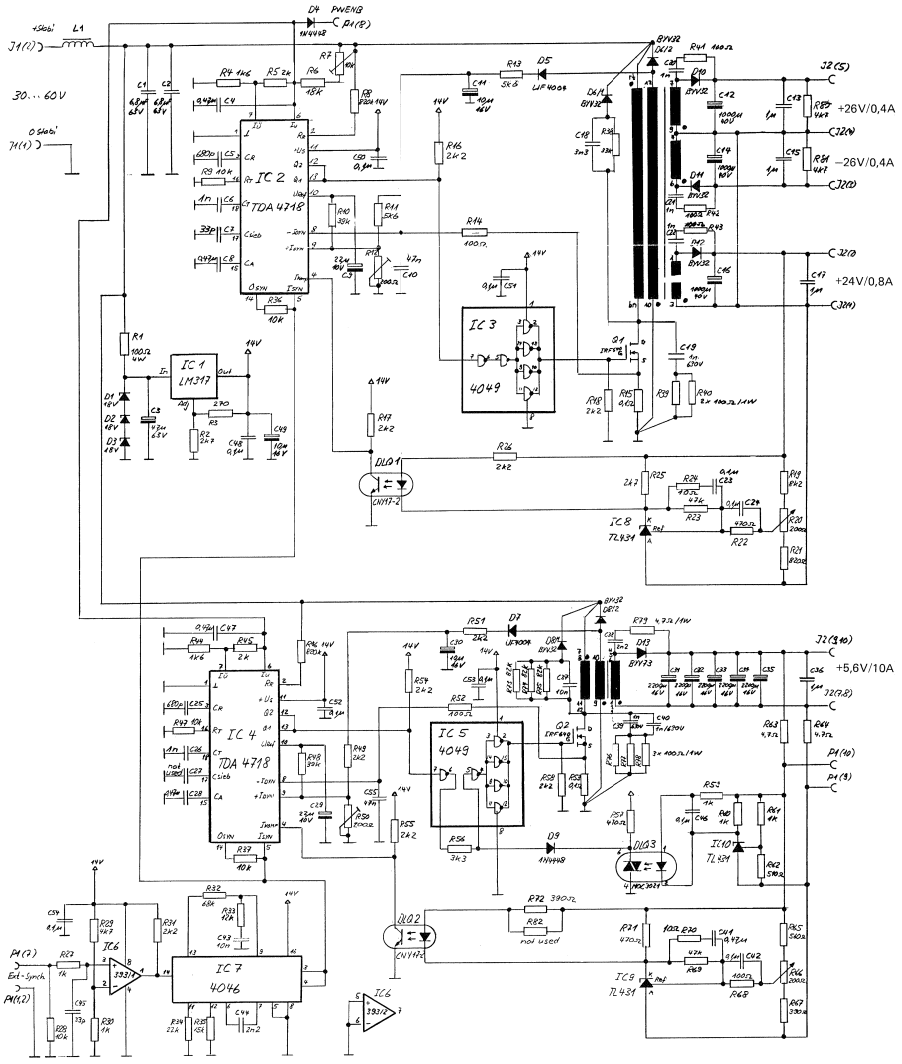

0 20.03.87 Gerstorfer				PAGE 1 OF 1
STUDER	STABILIZER AUX. VOLTAGES			1.820.872.81

STABILIZER +5,6V/±26V/+24V 1.820.872.81

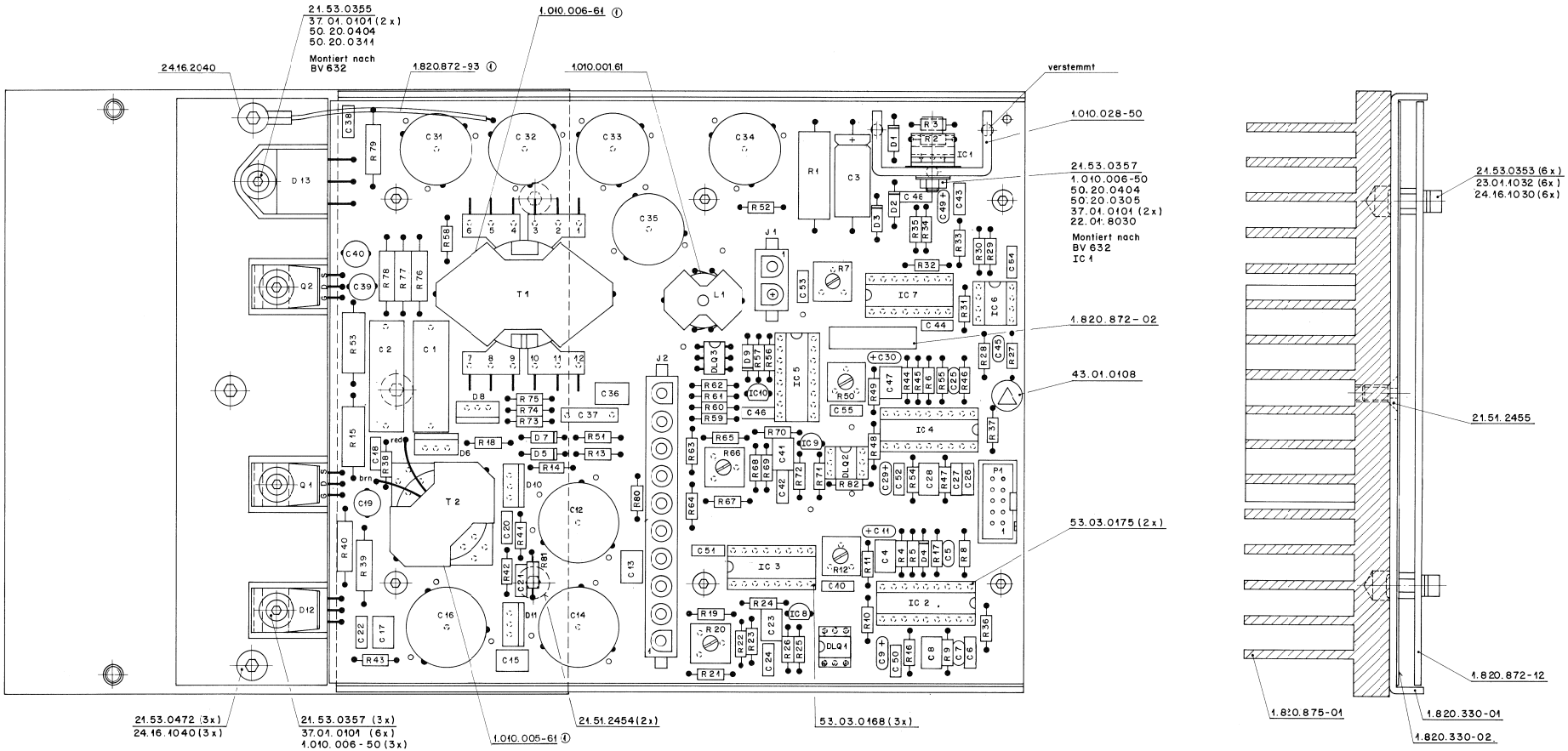

STABILIZER +5,6V/± 26V/+24V 1.820.872.81

IND.	POS.NO.	PART NO.	VALUE	SPECIFICATIONS / EQUIVALENT	MANUF.
	C.....1	59.31.5685	6.8 uF	10%, 63V, MPETP	
	C.....2	59.31.5685	6.8 uF	10%, 63V, MPETP	
	C.....3	59.25.6470	47 uF	20%, 63V, El	
	C.....4	59.06.0474	470 nF	10%, 63V, PETP	
	C.....5	59.32.2681	680 pF	10%, 50V, KER	
	C.....6	59.06.0102	1 nF	10%, 63V, PETP	
	C.....7	59.32.1330	33 pF	10%, 400V, KER	
	C.....8	59.06.0474	470 nF	10%, 50V, PETP	
	C.....9	59.26.1220	22 uF	20%, 10V, Sal	
	C....10	59.06.0473	47 nF	10%, 63V, PETP	
	C....11	59.26.2100	10 uF	20%, 16V, Sal	
	C....12	59.28.4102	1000 uF	20%, 40V, El	
	C....13	59.06.0105	1 uF	10%, 50V, PETP	
	C....14	59.28.4102	1000 uF	20%, 40V, El	
	C....15	59.06.0105	1 uF	10%, 50V, PETP	
	C....16	59.28.4102	1000 uF	20%, 40V, El	
	C....17	59.06.0105	1 uF	10%, 50V, PETP	
	C....18	59.06.0332	3.3 nF	10%, 63V, PETP	
	C....19	59.05.2102	1 nF	2.5%, 630V, PP	
	C....20	59.06.0102	1 nF	10%, 63V, PETP	
	C....21	59.06.0102	1 nF	10%, 63V, PETP	
	C....22	59.06.0102	1 nF	10%, 63V, PETP	
	C....23	59.06.0104	100 nF	10%, 63V, PETP	
	C....24	59.06.0104	100 nF	10%, 63V, PETP	
	C....25	59.32.2681	680 pF	10%, 50V, KER	
	C....26	59.06.0102	1 nF	10%, 63V, PETP	
	C....27			NOT USED	
	C....28	59.06.0474	470 nF	10%, 63V, PETP	
	C....29	59.26.1220	22 uF	20%, 10V, Sal	
	C....30	59.26.2100	10 uF	20%, 16V, Sal	
	C....31	59.28.2222	2200 uF	20%, 16V, El	
	C....32	59.28.2222	2200 uF	20%, 16V, El	
	C....33	59.28.2222	2200 uF	20%, 16V, El	
	C....34	59.28.2222	2200 uF	20%, 16V, El	
	C....35	59.28.2222	2200 uF	20%, 16V, El	
	C....36	59.06.0105	1 uF	10%, 50V, PETP	
	C....37	59.31.7103	10 nF	10%, 160V, PETP	

IND.	POS.NO.	PART NO.	VALUE	SPECIFICATIONS / EQUIVALENT	MANUF.
	C....38	59.06.0222	2.2 nF	10%, 63V, PETP	
	C....39	59.05.2102	1 nF	2.5%, 630V, PP	
	C....40	59.05.2102	1 nF	2.5%, 630V, PP	
	C....41	59.06.0474	470 nF	10%, 63V, PETP	
	C....42	59.06.0104	100 nF	10%, 63V, PETP	
	C....43	59.06.0103	10 nF	10%, 63V, PETP	
	C....44	59.06.0222	2.2 nF	10%, 63V, PETP	
	C....45	59.32.1330	33 pF	10%, 400V, KER	
	C....46	59.06.0104	100 nF	10%, 63V, PETP	
	C....47	59.06.0474	470 nF	10%, 63V, PETP	
	C....48	59.06.0104	100 nF	10%, 63V, PETP	
	C....49	59.26.2100	10 uF	20%, 16V, Sal	
	C....50	59.06.0104	100 nF	10%, 63V, PETP	
	C....51	59.06.0104	100 nF	10%, 63V, PETP	
	C....52	59.06.0104	100 nF	10%, 63V, PETP	
	C....53	59.06.0104	100 nF	10%, 63V, PETP	
	C....54	59.06.0104	100 nF	10%, 63V, PETP	
	C....55	59.06.0473	47 nF	10%, 63V, PETP	
	D.....1	50.04.1222	18 V Z	BZX 85 C 18	ITT,Mot,Ph,TE,Tho
	D.....2	50.04.1222	18 V Z	BZX 85 C 18	ITT,Mot,Ph,TE,Tho
	D.....3	50.04.1222	18 V Z	BZX 85 C 18	ITT,Mot,Ph,TE,Tho
	D.....4	50.04.0125	1N 4448		Fc,ITT,Ph,Ses,Tf
	D.....5	50.04.0138	UF 4004		
	D.....6	50.04.0517	BYV 32-200		Mot,Ph
	D.....7	50.04.0138	UF 4004		
	D.....8	50.04.0517	BYV 32-200		Mot,Ph
	D.....9	50.04.0125	1N 4448		Fc,ITT,Ph,Ses,Tf
	D....10	50.04.0517	BYV 32-200		Mot,Ph
	D....11	50.04.0517	BYV 32-200		Mot,Ph
	D....12	50.04.0517	BYV 32-200		Mot,Ph
	D....13	50.04.0520	MBR 3045PT	BYV 73-45	Mot,Ph
	DLQ...1	50.04.3200	CNY 17-2		Sie
	DLQ...2	50.04.3200	CNY 17-2		Sie
	DLQ...3	50.04.2139	MOC 3021		Mot

IND.	POS.NO.	PART NO.	VALUE	SPECIFICATIONS / EQUIVALENT	MANUF.
	IC....1	50.10.0104	LM 317 SP	...T, ...KC	Mot,NS,SGS,Tho,TI
	IC....2	50.10.0111	TDA 4718 A	Q 67000 - Y639	Sie
	IC....3	50.07.0049	HEF4049BP	TC 4049 BP	Ph,To
	IC....4	50.10.0111	TDA 4718 A	Q 67000 - Y639	Sie
	IC....5	50.07.0049	HEF4049BF	TC 4049 BF	Ph,To
	IC....6	50.05.0283	LM 393 ..		NS,Tho,TI
	IC....7	50.07.0046	MC14046BPC	... 4046 ..	Mot,Ph,RCA
	IC....8	50.10.0106	TL 431 CLP		Mot,TI
	IC....9	50.10.0106	TL 431 CLP		Mot,TI
	IC...10	50.10.0106	TL 431 CLP		Mot,TI
	J.....1	54.25.0002	2 cont.	AMP nr. 826846-3	
	J.....2	54.25.0010	10 cont.	AMP nr. 826852-3	
	L.....1	1.022.295.00		filter coil	St
	P.....1	54.14.2001	10 cont.	see note 1	
	Q.....1	50.03.1510	IFR 640		IR/SIX
	Q.....2	50.03.1510	IFR 640		IR/Six
	R.....1	57.56.5101	100 Ohm	10%, 4 W	
	R.....2	57.11.4272	2.7 kOhm	2%	
	R.....3	57.11.4271	270 Ohm	2%	
	R.....4	57.11.3162	1.6 kOhm	1%	
	R.....5	57.11.3202	2 kOhm	1%	
	R.....6	57.11.4183	18 kOhm	2%	
	R.....7	58.01.8103	10 kOhm	see note 4	
	R.....8	57.11.4824	820 kOhm	2%	
	R.....9	57.11.4103	10 kOhm	2%	
	R....10	57.11.4393	39 kOhm	1%	
	R....11	57.11.4562	5.6 kOhm	2%	
	R....12	58.01.8201	200 Ohm	see note 2	
	R....13	57.11.4562	5.6 kOhm	2%	
	R....14	57.11.4101	100 Ohm	2%	
	R....15	57.56.2050	50 mOhm	5%, 3 W, Low Inductance	
	R....16	57.11.4222	2.2 kOhm	2%	

IND.	POS.NO.	PART NO.	VALUE	SPECIFICATIONS / EQUIVALENT	MANUF.
	R....17	57.11.4222	2.2 kOhm	2%	
	R....18	57.11.4222	2.2 kOhm	2%	
	R....19	57.11.4822	8.2 kOhm	2%	
	R....20	58.01.8501	500 Ohm	see note 2	
	R....21	57.11.4821	820 Ohm	2%	
	R....22	57.11.4471	470 Ohm	2%	
	R....23	57.11.4473	47 kOhm	2%	
	R....24	57.11.4101	100 Ohm	2%	
	R....25	57.11.4272	2.7 kOhm	2%	
	R....26	57.11.4222	2.2 kOhm	2%	
	R....27	57.11.4102	1 kOhm	2%	
	R....28	57.11.4103	10 kOhm	2%	
	R....29	57.11.4472	4.7 kOhm	2%	
	R....30	57.11.4102	1 kOhm	2%	
	R....31	57.11.4222	2.2 kOhm	2%	
	R....32	57.11.4683	68 kOhm	2%	
	R....33	57.11.4123	12 kOhm	2%	
	R....34	57.11.4223	22 kOhm	2%	
	R....35	57.11.4153	15 kOhm	2%	
	R....36	57.11.4103	10 kOhm	2%	
	R....37	57.11.4103	10 kOhm	2%	
	R....38	57.11.4333	33 kOhm	2%	
	R....39	57.13.4101	100 Ohm	2%	
	R....40	57.13.4101	100 Ohm	2%	
	R....41	57.11.4101	100 Ohm	2%	
	R....42	57.11.4101	100 Ohm	2%	
	R....43	57.11.4101	100 Ohm	2%	
	R....44	57.11.3162	1.6 kOhm	1%	
	R....45	57.11.3202	2 kOhm	1%	
	R....46	57.11.4824	820 kOhm	2%	
	R....47	57.11.4103	10 kOhm	2%	
	R....48	57.11.4393	39 kOhm	2%	
	R....49	57.11.4222	2.2 kOhm	2%	
	R....50	58.01.8201	200 Ohm	see note 2	
	R....51	57.11.4222	2.2 kOhm	2%	
	R....52	57.11.4101	100 Ohm	2%	
	R....53	57.56.2050	50 mOhm	5%, 3 W, Low Inductance	

IND.	POS.NO.	PART NO.	VALUE	SPECIFICATIONS / EQUIVALENT	MANUF.
	R....54	57.11.4222	2.2 kOhm	2%	
	R....55	57.11.4222	2.2 kOhm	2%	
	R....56	57.11.4332	3.3 kOhm	2%	
	R....57	57.11.4823	82 kOhm	2%	
	R....58	57.11.4222	2.2 kOhm	2%	
	R....59	57.11.4102	1 kOhm	2%	
	R....60	57.11.4102	1 kOhm	2%	
	R....61	57.11.4102	1 kOhm	2%	
	R....62	57.11.3511	510 Ohm	2%	
	R....63	57.11.4479	4.7 Ohm	2%	
	R....64	57.11.4479	4.7 Ohm	2%	
	R....65	57.11.4561	560 Ohm	2%	
	R....66	58.01.8201	200 Ohm	see note 2	
	R....67	57.11.4391	390 Ohm	2%	
	R....68	57.11.4101	100 Ohm	2%	
	R....69	57.11.4473	47 kOhm	2%	
	R....70	57.11.4100	10 Ohm	2%	
	R....71	57.11.4471	470 Ohm	2%	
	R....72	57.11.4391	390 Ohm	2%	
	R....73	57.11.4823	82 kOhm	2%	
	R....74	57.11.4823	82 kOhm	2%	
	R....75	57.11.4823	82 kOhm	2%	
	R....76	57.13.4101	100 Ohm	2%	
	R....77	57.13.4101	100 Ohm	2%	
	R....78	57.13.4101	100 Ohm	2%	
	R....79	57.13.4479	4.7 Ohm	2%	
	R....80	57.11.4472	4.7 kOhm	2%	
	R....81	57.11.4472	4.7 kOhm	2%	
	R....82			not used	
	T.....1	1.022.291.00		Switching power transformer, 5.6V	St
	T.....2	1.022.292.00		Switching power transformer, AUX	St

IND.	POS.NO.	PART NO.	VALUE	SPECIFICATIONS / EQUIVALENT	MANUF.

Note 1 - Connector, 10 contacts: Yamaichi nr. FAP-10-08-40 SS
Burndy nr. BPH 9 B 10 B 00 GS
3M nr. 7610-6002 VZ

Note 2 - Potentiometer, 200 Ohm: Bourns nr. 3386 F-1-201
A. Bradley nr. E 2 B 201
Spectrol nr. 63 M 201 T 010
Murata nr. POT 3104 F-1-201

Note 3 - Potentiometer, 2 kOhm: Bourns nr. 3386 F-1-202
A. Bradley nr. E 2 B 202
Spectrol nr. 63 M 202 T 010
Murata nr. POT 3104 F-1-202

Note 4 - Potentiometer, 10 kOhm: Bourns nr. 3386 F-1-103
A. Bradley nr. E 2 B 103
Spectrol nr. 63 M 103 T 010
Murata nr. POT 3104 F-1-103

El=Electrolytic, MPETP=Metalized Polyesterfilm, PETP=Polyesterfilm,
PP=Polypropylene, Sal=Solid aluminium

MANUFACTURER: Fc=Fairchild, ITT=Intermetall, IR=International Rectifier,
Mot=Motorola, NS=National Semiconductors, Ph=Philips,
RCA=RCA Corp. of America, Ses=Sescosem, SGS=SGS/Ates,
Sie=Siemens, Six=Siliconix, St=Studer, Tf=Telefunken,
Tho=Thomson CSF, TI=Texas Instruments, To=Toshiba,
GI=General Instruments.

ORIG 87/04/27

STABILIZER+5,6V/± 26V/+24V 1.820.872.82

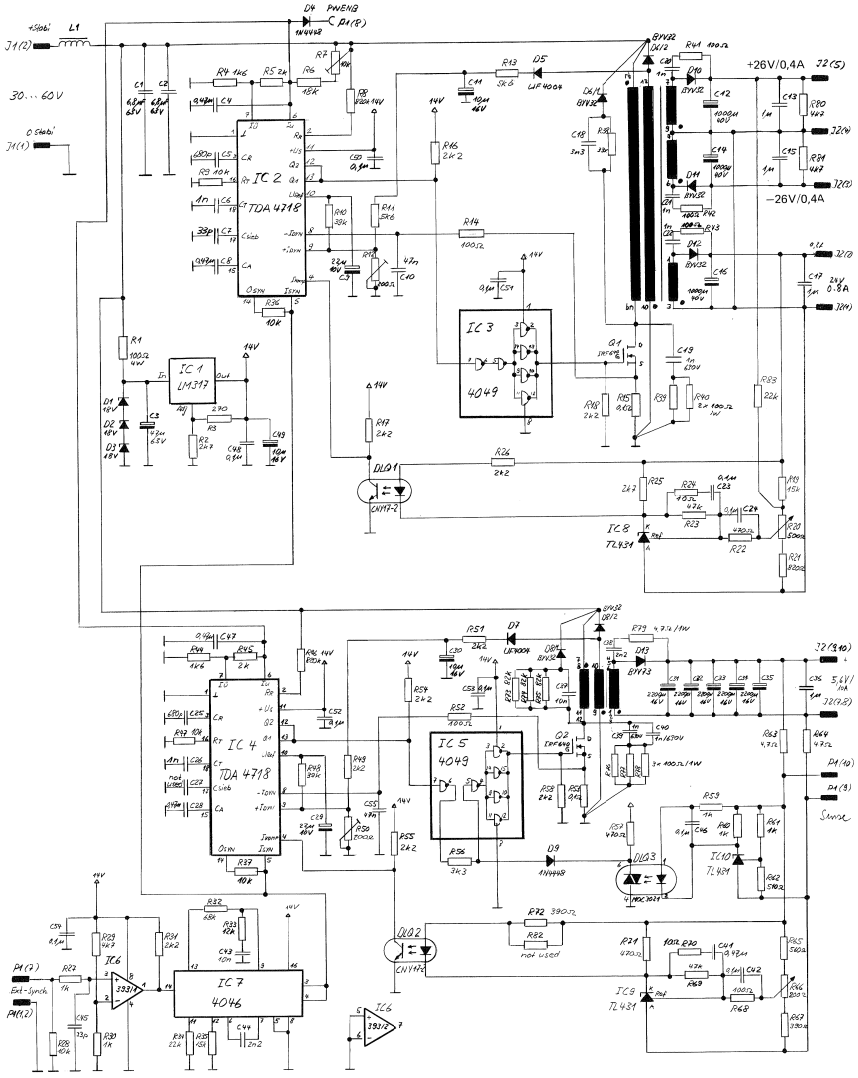

0 10.02.88 Th. Lauridsen				PAGE 1 OF 1
STUDER	STABILIZER AUX. VOLTAGES			1.820.872.82

STABILIZER +5,6V/± 26V/+24V 1.820.872.82

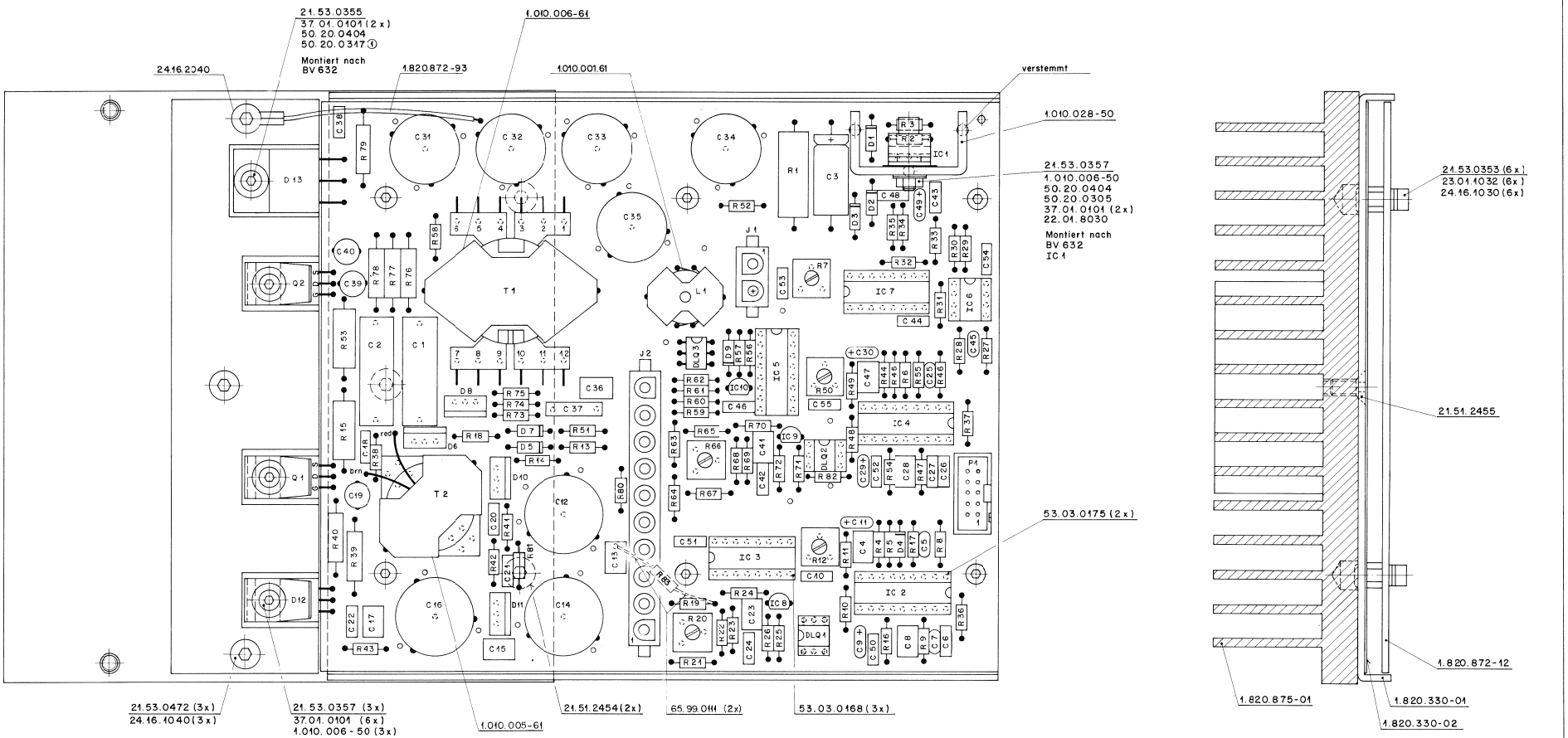

STABILIZER +5,6V/± 26V/+24V 1.820.872.82

IND.	POS.NO.	PART NO.	VALUE	SPECIFICATIONS / EQUIVALENT	MANUF.
	C.....1	59.31.5685	6.8 uF	10%, 63V, MPETP	
	C.....2	59.31.5685	6.8 uF	10%, 63V, MPETP	
	C.....3	59.25.6470	47 uF	20%, 63V, El	
	C.....4	59.06.0474	470 nF	10%, 63V, PETP	
	C.....5	59.32.2681	680 pF	10%, 50V, KER	
	C.....6	59.06.0102	1 nF	10%, 63V, PETP	
	C.....7	59.32.1330	33 pF	10%, 400V, KER	
	C.....8	59.06.0474	470 nF	10%, 50V, PETP	
	C.....9	59.26.1220	22 uF	20%, 10V, Sal	
	C....10	59.06.0473	47 nF	10%, 63V, PETP	
	C....11	59.26.2100	10 uF	20%, 16V, Sal	
	C....12	59.28.4102	1000 uF	20%, 40V, El	
	C....13	59.06.0105	1 uF	10%, 50V, PETP	
	C....14	59.28.4102	1000 uF	20%, 40V, El	
	C....15	59.06.0105	1 uF	10%, 50V, PETP	
	C....16	59.28.4102	1000 uF	20%, 40V, El	
	C....17	59.06.0105	1 uF	10%, 50V, PETP	
	C....18	59.06.0332	3.3 nF	10%, 63V, PETP	
	C....19	59.05.2102	1 nF	2.5%, 630V, PP	
	C....20	59.06.0102	1 nF	10%, 63V, PETP	
	C....21	59.06.0102	1 nF	10%, 63V, PETP	
	C....22	59.06.0102	1 nF	10%, 63V, PETP	
	C....23	59.06.0104	100 nF	10%, 63V, PETP	
	C....24	59.06.0104	100 nF	10%, 63V, PETP	
	C....25	59.32.2681	680 pF	10%, 50V, KER	
	C....26	59.06.0102	1 nF	10%, 63V, PETP	
	C....27			NOT USED	
	C....28	59.06.0474	470 nF	10%, 63V, PETP	
	C....29	59.26.1220	22 uF	20%, 10V, Sal	
	C....30	59.26.2100	10 uF	20%, 16V, Sal	
	C....31	59.28.2222	2200 uF	20%, 16V, El	
	C....32	59.28.2222	2200 uF	20%, 16V, El	
	C....33	59.28.2222	2200 uF	20%, 16V, El	
	C....34	59.28.2222	2200 uF	20%, 16V, El	
	C....35	59.28.2222	2200 uF	20%, 16V, El	
	C....36	59.06.0105	1 uF	10%, 50V, PETP	
	C....37	59.31.7103	10 nF	10%, 160V, PETP	

IND.	POS.NO.	PART NO.	VALUE	SPECIFICATIONS / EQUIVALENT	MANUF.
	C....38	59.06.0222	2.2 nF	10%, 63V, PETP	
	C....39	59.05.2102	1 nF	2.5%, 630V, PP	
	C....40	59.05.2102	1 nF	2.5%, 630V, PP	
	C....41	59.06.0474	470 nF	10%, 63V, PETP	
	C....42	59.06.0104	100 nF	10%, 63V, PETP	
	C....43	59.06.0103	10 nF	10%, 63V, PETP	
	C....44	59.06.0222	2.2 nF	10%, 63V, PETP	
	C....45	59.32.1330	33 pF	10%, 400V, KER	
	C....46	59.06.0104	100 nF	10%, 63V, PETP	
	C....47	59.06.0474	470 nF	10%, 63V, PETP	
	C....48	59.06.0104	100 nF	10%, 63V, PETP	
	C....49	59.26.2100	10 uF	20%, 16V, Sal	
	C....50	59.06.0104	100 nF	10%, 63V, PETP	
	C....51	59.06.0104	100 nF	10%, 63V, PETP	
	C....52	59.06.0104	100 nF	10%, 63V, PETP	
	C....53	59.06.0104	100 nF	10%, 63V, PETP	
	C....54	59.06.0104	100 nF	10%, 63V, PETP	
	C....55	59.06.0473	47 nF	10%, 63V, PETP	
	D.....1	50.04.1222	18 V Z	BZX 85 C 18	ITT,Mot,Ph,Tf,Tho
	D.....2	50.04.1222	18 V Z	BZX 85 C 18	ITT,Mot,Ph,Tf,Tho
	D.....3	50.04.1222	18 V Z	BZX 85 C 18	ITT,Mot,Ph,Tf,Tho
	D.....4	50.04.0125	1N 4448		Fc,ITT,Ph,Ses,Tf
	D.....5	50.04.0138	UF 4004		
	D.....6	50.04.0517	BYV 32-200		Mot,Ph
	D.....7	50.04.0138	UF 4004		
	D.....8	50.04.0517	BYV 32-200		Mot,Ph
	D.....9	50.04.0125	1N 4448		Fc,ITT,Ph,Ses,Tf
	D....10	50.04.0517	BYV 32-200		Mot,Ph
	D....11	50.04.0517	BYV 32-200		Mot,Ph
	D....12	50.04.0517	BYV 32-200		Mot,Ph
	D....13	50.04.0520	MBR 3045PT	BYV 73-45	Mot,Ph
	DLQ...1	50.04.3200	CNY 17-2		Sie
	DLQ...2	50.04.3200	CNY 17-2		Sie
	DLQ...3	50.04.2139	MOC 3021		Mot

IND.	POS.NO.	PART NO.	VALUE	SPECIFICATIONS / EQUIVALENT	MANUF.
	IC....1	50.10.0104	LM 317 SP	...T, ...KC	Mot,NS,SGS,Tho,TI
	IC....2	50.10.0111	TDA 4718 A	Q 67000 - Y639	Sie
	IC....3	50.07.0049	HEF4049BP	TC 4049 BP	Ph,To
	IC....4	50.10.0111	TDA 4718 A	Q 67000 - Y639	Sie
	IC....5	50.07.0049	HEF4049BP	TC 4049 BP	Ph,To
	IC....6	50.05.0283	LM 393 ..		NS,Tho,TI
	IC....7	50.07.0046	MC14046BPC	... 4046 ..	Mot,Ph,RCA
	IC....8	50.10.0106	TL 431 CLP		Mot,TI
	IC....9	50.10.0106	TL 431 CLP		Mot,TI
	IC....10	50.10.0106	TL 431 CLP		Mot,TI
	J.....1	54.25.0002	2 cont.	AMP nr. 826846-3	
	J.....2	54.25.0010	10 cont.	AMP nr. 826852-3	
(00)	L.....1	1.022.295.00		filter coil	St
(01)	L.....1	1.022.295.81		filter coil	St
	P.....1	54.14.2001	10 cont.	see note 1	
	Q.....1	50.03.1510	IFR 640		IR,SIX
	Q.....2	50.03.1510	IFR 640		IR,Six
	R.....1	57.56.5101	100 Ohm	10%, 4 W	
	R.....2	57.11.3272	2.7 kOhm	2%	
	R.....3	57.11.3271	270 Ohm	2%	
	R.....4	57.11.3162	1.6 kOhm	1%	
	R.....5	57.11.3202	2 kOhm	1%	
	R.....6	57.11.3183	18 kOhm	2%	
	R.....7	58.01.8103	10 kOhm	see note 4	
	R.....8	57.11.3824	820 kOhm	2%	
	R.....9	57.11.3103	10 kOhm	2%	
	R....10	57.11.3393	39 kOhm	1%	
	R....11	57.11.3562	5.6 kOhm	2%	
	R....12	58.01.8201	200 Ohm	see note 2	
	R....13	57.11.3562	5.6 kOhm	2%	
	R....14	57.11.3101	100 Ohm	2%	
	R....15	57.56.2050	50 mOhm	5%, 3 W, Low Inductance	

IND.	POS.NO.	PART NO.	VALUE	SPECIFICATIONS / EQUIVALENT	MANUF.
	R....16	57.11.3222	2.2 kOhm	2%	
	R....17	57.11.3222	2.2 kOhm	2%	
	R....18	57.11.3222	2.2 kOhm	2%	
	R....19	57.11.3153	15 kOhm	2%	
	R....20	58.01.8501	500 Ohm	see note 2	
	R....21	57.11.3821	820 Ohm	2%	
	R....22	57.11.3471	470 Ohm	2%	
	R....23	57.11.3473	47 kOhm	2%	
	R....24	57.11.3101	100 Ohm	2%	
	R....25	57.11.3272	2.7 kOhm	2%	
	R....26	57.11.3222	2.2 kOhm	2%	
	R....27	57.11.3102	1 kOhm	2%	
	R....28	57.11.3103	10 kOhm	2%	
	R....29	57.11.3472	4.7 kOhm	2%	
	R....30	57.11.3102	1 kOhm	2%	
	R....31	57.11.3222	2.2 kOhm	2%	
	R....32	57.11.3683	68 kOhm	2%	
	R....33	57.11.3123	12 kOhm	2%	
	R....34	57.11.3223	22 kOhm	2%	
	R....35	57.11.3153	15 kOhm	2%	
	R....36	57.11.3103	10 kOhm	2%	
	R....37	57.11.3103	10 kOhm	2%	
	R....38	57.11.3333	33 kOhm	2%	
	R....39	57.13.4101	100 Ohm	2%	
	R....40	57.13.4101	100 Ohm	2%	
	R....41	57.11.3101	100 Ohm	2%	
	R....42	57.11.3101	100 Ohm	2%	
	R....43	57.11.3101	100 Ohm	2%	
	R....44	57.11.3162	1.6 kOhm	1%	
	R....45	57.11.3202	2 kOhm	1%	
	R....46	57.11.3824	820 kOhm	2%	
	R....47	57.11.3103	10 kOhm	2%	
	R....48	57.11.3393	39 kOhm	2%	
	R....49	57.11.3222	2.2 kOhm	2%	
	R....50	58.01.8201	200 Ohm	see note 2	
	R....51	57.11.3222	2.2 kOhm	2%	
	R....52	57.11.3101	100 Ohm	2%	

IND.	POS.NO.	PART NO.	VALUE	SPECIFICATIONS / EQUIVALENT	MANUF.
	R....53	57.56.2050	50 mOhm	5%, 3 W, Low Inductance	
	R....54	57.11.3222	2.2 kOhm	2%	
	R....55	57.11.3222	2.2 kOhm	2%	
	R....56	57.11.3332	3.3 kOhm	2%	
	R....57	57.11.3823	82 kOhm	2%	
	R....58	57.11.3222	2.2 kOhm	2%	
	R....59	57.11.3102	1 kOhm	2%	
	R....60	57.11.3102	1 kOhm	2%	
	R....61	57.11.3102	1 kOhm	2%	
	R....62	57.11.3511	510 Ohm	2%	
	R....63	57.11.3479	4.7 Ohm	2%	
	R....64	57.11.3479	4.7 Ohm	2%	
	R....65	57.11.3561	560 Ohm	2%	
	R....66	58.01.8201	200 Ohm	see note 2	
	R....67	57.11.3391	390 Ohm	2%	
	R....68	57.11.3101	100 Ohm	2%	
	R....69	57.11.3473	47 kOhm	2%	
	R....70	57.11.3100	10 Ohm	2%	
	R....71	57.11.3471	470 Ohm	2%	
	R....72	57.11.3391	390 Ohm	2%	
	R....73	57.11.3823	82 kOhm	2%	
	R....74	57.11.3823	82 kOhm	2%	
	R....75	57.11.3823	82 kOhm	2%	
	R....76	57.13.4101	100 Ohm	2%	
	R....77	57.13.4101	100 Ohm	2%	
	R....78	57.13.4101	100 Ohm	2%	
	R....79	57.13.4479	4.7 Ohm	2%	
	R....80	57.11.3472	4.7 kOhm	2%	
	R....81	57.11.3472	4.7 kOhm	2%	
	R....82			not used	
	R....83	57.11.3223	22 kOhm	2%	
	T.....1	1.022.291.00		Switching power transformer, 5.6V	St
	T.....2	1.022.292.00		Switching power transformer, AUX	St

(01) 22.02.88 Extended current range.

Note 1 - Connector, 10 contacts: Yamaichi nr. FAP-10-08-40 SS
Burndy nr. BPH 9 B 10 B 00 GS
3M nr. 7610-6002 VZ

Note 2 - Potentiometer, 200 Ohm: Bourns nr. 3386 F-1-201
A. Bradley nr. E 2 B 201
Spectrol nr. 63 M 201 T 010
Murata nr. POT 3104 F-1-201

Note 3 - Potentiometer, 2 kOhm: Bourns nr. 3386 F-1-202
A. Bradley nr. E 2 B 202
Spectrol nr. 63 M 202 T 010
Murata nr. POT 3104 F-1-202

Note 4 - Potentiometer, 10 kOhm: Bourns nr. 3386 F-1-103
A. Bradley nr. E 2 B 103
Spectrol nr. 63 M 103 T 010
Murata nr. POT 3104 F-1-103

El=Electrolytic, MPETP=Metalized Polyesterfilm, PETP=Polyesterfilm,
PP=Polypropylene, Sal=Solid aluminium

MANUFACTURER: Fc=Fairchild, ITT=Intermetall, IR=International Rectifier,
Mot=Motorola, NS=National Semiconductors, Ph=Philips,
RCA=RCA Corp. of America, Ses=Seescosem, SGS=SGS/Ates,
Sie=Siemens, Six=Siliconix, St=Studer, Tf=Telefunken,
Tho=Thomson CSF, TI=Texas Instruments, To=Toshiba,
GI=General Instruments.

ORIG 87/11/30 (01) 88/02/22

STABILIZER +5,6V/± 26V/+24V 1.820.872.82

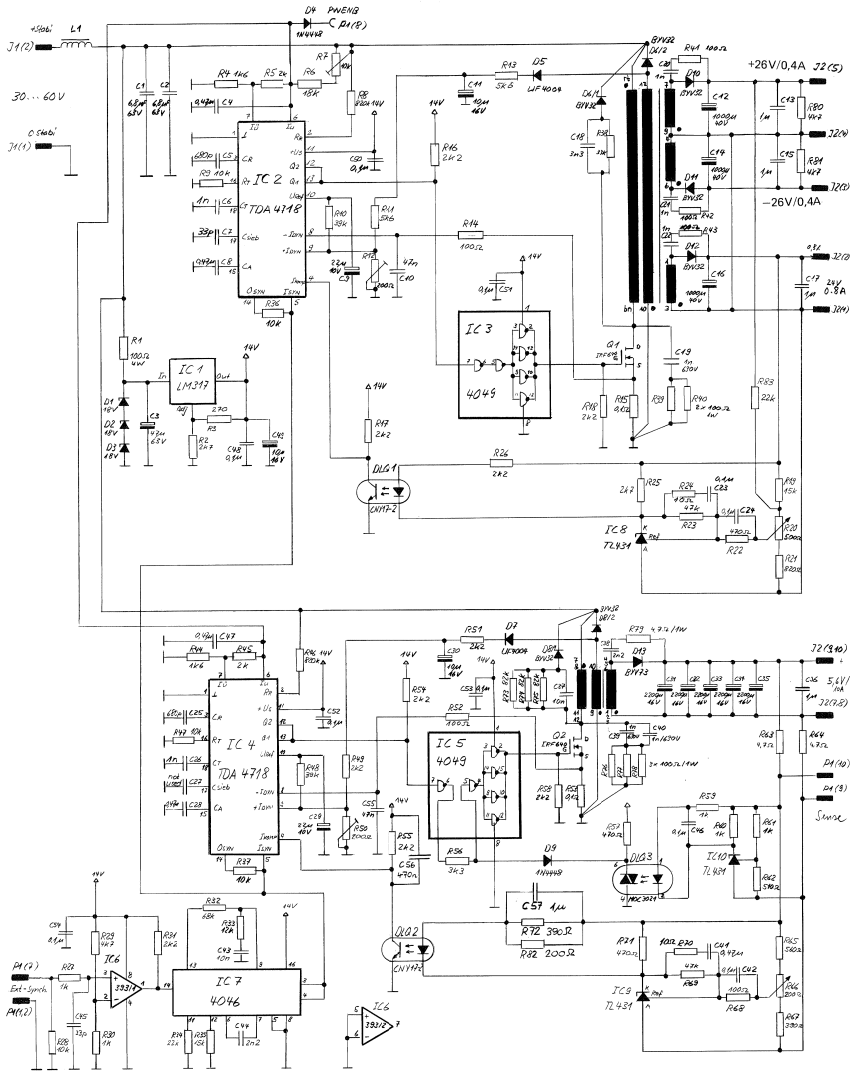

0 25.01.90 A.Stampf	. .	. .	. .	. .
				PAGE 1 OF 1
STUDER	STABILIZER AUX. VOLTAGES			1.820.872.83

STABILIZER +5,6V/± 26V/+24V 1.820.872.83

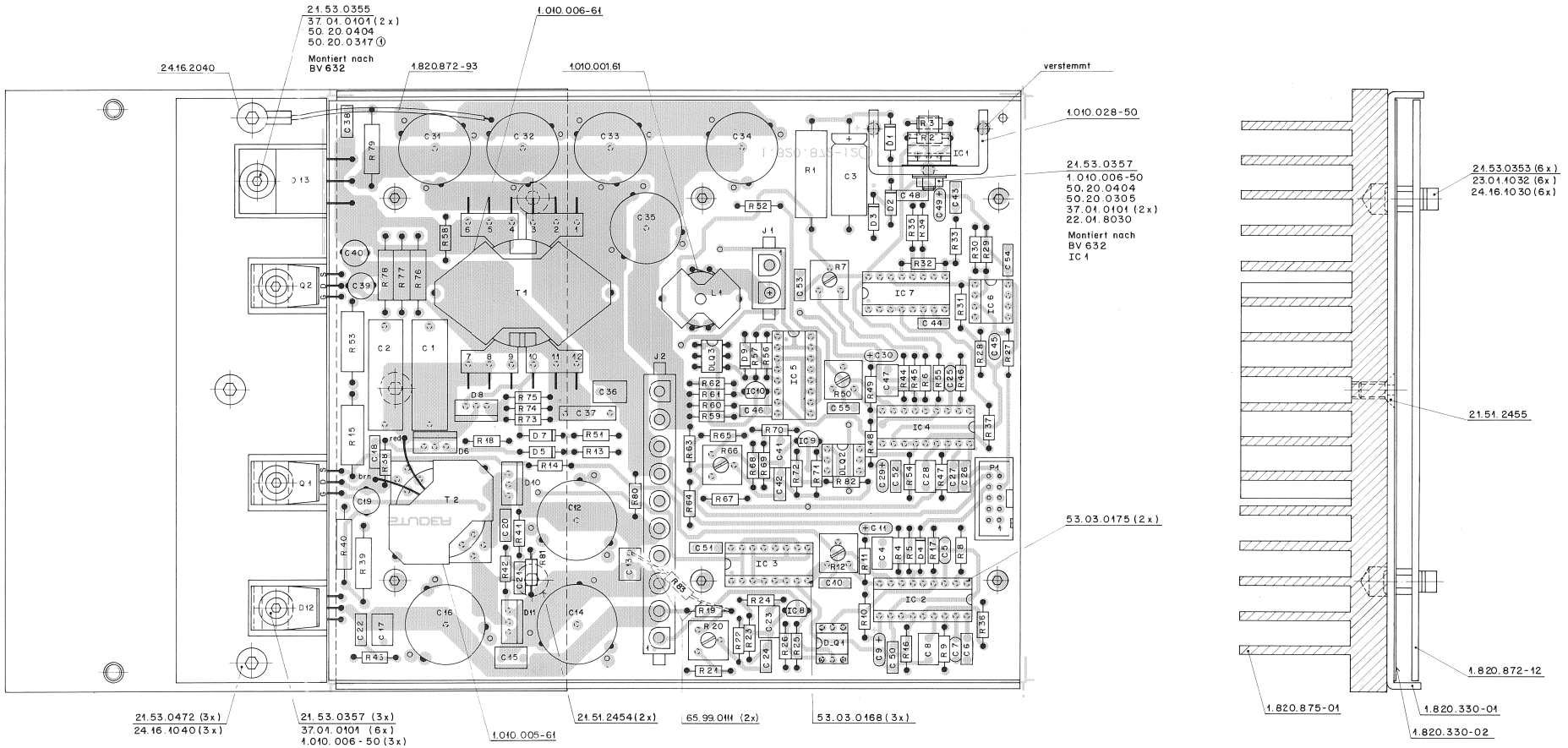

STABILIZER +5,6V/± 26V/+24V 1.820.872.83

IND.	POS.NO.	PART NO.	VALUE	SPECIFICATIONS / EQUIVALENT	MANUF.
	C.....1	59.03.2104	0.1 uF	10%, 250V, PETP	
	C.....2	59.25.1221	220 uF	6.3V, El	
	J.....1	54.25.0010		AMP nr. 826852-3	
	J.....2	54.25.0010		AMP nr. 826852-3	
	J.....3	54.25.0010		AMP nr. 826852-3	
	J.....4			see note 1	
	J.....5			see note 1	
	J.....6	54.02.0332		AMP nr. 2-160 256 - 2	
	J.....7			see note 1	
	P.....1			see note 8	
	P.....2			see note 8	
	P.....3			see note 3	
	P.....4			see note 4	
	P.....5			see note 3	
	P.....6			see note 5	
	P.....7			see note 2	
	P.....8			see note 3	
	P.....9			see note 6	
	P....10	54.02.0416		Molex nr. 03-06-1241	
	P....11	54.01.0260		AMP nr. 163.690-1	
	P....12			see note 7	
(**)	END....				
	C.....1	59.31.5685	6.8 uF	10%, 63V, MPETP	
	C.....2	59.31.5685	6.8 uF	10%, 63V, MPETP	
	C.....3	59.25.6470	47 uF	20%, 63V, El	
	C.....4	59.06.0474	470 nF	10%, 63V, PETP	
	C.....5	59.32.2681	680 pF	10%, 50V, KER	
	C.....6	59.06.0102	1 nF	10%, 63V, PETP	

IND.	POS.NO.	PART NO.	VALUE	SPECIFICATIONS / EQUIVALENT	MANUF.
	C.....7	59.32.1330	33 pF	10%, 400V, KER	
	C.....8	59.06.0474	470 nF	10%, 50V, PETP	
	C.....9	59.26.1220	22 uF	20%, 10V, Sal	
	C....10	59.06.0473	47 nF	10%, 63V, PETP	
	C....11	59.26.2100	10 uF	20%, 16V, Sal	
	C....12	59.28.4102	1000 uF	20%, 40V, El	
	C....13	59.06.0105	1 uF	10%, 50V, PETP	
	C....14	59.28.4102	1000 uF	20%, 40V, El	
	C....15	59.06.0105	1 uF	10%, 50V, PETP	
	C....16	59.28.4102	1000 uF	20%, 40V, El	
	C....17	59.06.0105	1 uF	10%, 50V, PETP	
	C....18	59.06.0332	3.3 nF	10%, 63V, PETP	
	C....19	59.05.2102	1 nF	2.5%, 630V, PP	
	C....20	59.06.0102	1 nF	10%, 63V, PETP	
	C....21	59.06.0102	1 nF	10%, 63V, PETP	
	C....22	59.06.0102	1 nF	10%, 63V, PETP	
	C....23	59.06.0104	100 nF	10%, 63V, PETP	
	C....24	59.06.0104	100 nF	10%, 63V, PETP	
	C....25	59.32.2681	680 pF	10%, 50V, KER	

IND.	POS.NO.	PART NO.	VALUE	SPECIFICATIONS / EQUIVALENT	MANUF.
	C....26	59.06.0102	1 nF	10%, 63V, PETP	
	C....27			NOT USED	
	C....28	59.06.0474	470 nF	10%, 63V, PETP	
	C....29	59.26.1220	22 uF	20%, 10V, Sal	
	C....30	59.26.2100	10 uF	20%, 16V, Sal	
	C....31	59.28.2222	2200 uF	20%, 16V, El	
	C....32	59.28.2222	2200 uF	20%, 16V, El	
	C....33	59.28.2222	2200 uF	20%, 16V, El	
	C....34	59.28.2222	2200 uF	20%, 16V, El	
	C....35	59.28.2222	2200 uF	20%, 16V, El	
	C....36	59.06.0105	1 uF	10%, 50V, PETP	
	C....37	59.31.7103	10 nF	10%, 160V, PETP	
	C....38	59.06.0222	2.2 nF	10%, 63V, PETP	
	C....39	59.05.2102	1 nF	2.5%, 630V, PP	
	C....40	59.05.2102	1 nF	2.5%, 630V, PP	
	C....41	59.06.0474	470 nF	10%, 63V, PETP	
	C....42	59.06.0104	100 nF	10%, 63V, PETP	
	C....43	59.06.0103	10 nF	10%, 63V, PETP	
	C....44	59.06.0222	2.2 nF	10%, 63V, PETP	

IND.	POS.NO.	PART NO.	VALUE	SPECIFICATIONS / EQUIVALENT	MANUF.
	C....45	59.32.1330	33 pF	10%, 400V, KER	
	C....46	59.06.0104	100 nF	10%, 63V, PETP	
	C....47	59.06.0474	470 nF	10%, 63V, PETP	
	C....48	59.06.0104	100 nF	10%, 63V, PETP	
	C....49	59.26.2100	10 uF	20%, 16V, Sal	
	C....50	59.06.0104	100 nF	10%, 63V, PETP	
	C....51	59.06.0104	100 nF	10%, 63V, PETP	
	C....52	59.06.0104	100 nF	10%, 63V, PETP	
	C....53	59.06.0104	100 nF	10%, 63V, PETP	
	C....54	59.06.0104	100 nF	10%, 63V, PETP	
	C....55	59.06.0473	47 nF	10%, 63V, PETP	
	C....56	59.40.0474	470 nF	10%, 63V, PETP	
	C....57	59.40.0105	1 uF	10%, 63V, PETP	
	D.....1	50.04.1222	18 V Z	BZX 85 C 18	ITT,Mot,Ph,Tf,Tho
	D.....2	50.04.1222	18 V Z	BZX 85 C 18	ITT,Mot,Ph,Tf,Tho
	D.....3	50.04.1222	18 V Z	BZX 85 C 18	ITT,Mot,Ph,Tf,Tho
	D.....4	50.04.0125	1N 4448		Fc,ITT,Ph,Ses,Tf
	D.....5	50.04.0138	UF 4004		
	D.....6	50.04.0517	HVV 32-200		Mot,Ph

IND.	POS.NO.	PART NO.	VALUE	SPECIFICATIONS / EQUIVALENT	MANUF.
	D.....7	50.04.0138	UF 4004		
	D.....8	50.04.0517	HVV 32-200		Mot,Ph
	D.....9	50.04.0125	1N 4448		Fc,ITT,Ph,Ses,Tf
	D....10	50.04.0517	HVV 32-200		Mot,Ph
	D....11	50.04.0517	HVV 32-200		Mot,Ph
	D....12	50.04.0517	HVV 32-200		Mot,Ph
	D....13	50.04.0520	MBR 3045PT	BYV 73-45	Mot,Ph
	DLQ...1	50.04.3200	CNY 17-2		Sie
	DLQ...2	50.04.3200	CNY 17-2		Sie
	DLQ...3	50.04.2139	MOC 3021		Mot
	IC....1	50.10.0104	LM 317 SP	...T, ...KC	Mot,NS,SGS,Tho,TI
	IC....2	50.10.0111	TDA 4718 A	Q 67000 - Y639	Sie
	IC....3	50.07.0049	HEF4049BP	TC 4049 BP	Ph,To
	IC....4	50.10.0111	TDA 4718 A	Q 67000 - Y639	Sie
	IC....5	50.07.0049	HEF4049BP	TC 4049 BP	Ph,To
	IC....6	50.05.0283	LM 393 ..		NS,Tho,TI
	IC....7	50.07.0046	MC14046BPC	... 4046 ..	Mot,Ph,RCA
	IC....8	50.10.0106	TL 431 CLP		Mot,TI
	IC....9	50.10.0106	TL 431 CLP		Mot,TI

IND.	POS.NO.	PART NO.	VALUE	SPECIFICATIONS / EQUIVALENT	MANUF.
	IC....10	50.10.0106	TL 431 CLP		Mot,TI
	J.....1	54.25.0002	2 cont.	AMP nr. 826846-3	
	J.....2	54.25.0010	10 cont.	AMP nr. 826852-3	
	L.....1	1.022.295.81		filter coil	St
	P.....1	54.14.2101	10 cont.	see note 1	
	Q.....1	50.03.1510	IFR 640		IR,SIX
	Q.....2	50.03.1510	IFR 640		IR,Six
	R.....1	57.56.5101	100 Ohm	10%, 4 W	
	R.....2	57.11.3272	2.7 kOhm	2%	
	R.....3	57.11.3271	270 Ohm	2%	
	R.....4	57.11.3162	1.6 kOhm	1%	
	R.....5	57.11.3202	2 kOhm	1%	
	R.....6	57.11.3183	18 kOhm	2%	
	R.....7	58.01.8103	10 kOhm	see note 4	
	R.....8	57.11.3824	820 kOhm	2%	
	R.....9	57.11.3103	10 kOhm	2%	
	R....10	57.11.3993	39 kOhm	1%	
	R....11	57.11.3562	5.6 kOhm	2%	
	R....12	58.01.8201	200 Ohm	see note 2	

IND.	POS.NO.	PART NO.	VALUE	SPECIFICATIONS / EQUIVALENT	MANUF.
	R....13	57.11.3562	5.6 kOhm	2%	
	R....14	57.11.3101	100 Ohm	2%	
	R....15	57.56.2050	50 mOhm	5%, 3 W, Low Inductance	
	R....16	57.11.3222	2.2 kOhm	2%	
	R....17	57.11.3222	2.2 kOhm	2%	
	R....18	57.11.3222	2.2 kOhm	2%	
	R....19	57.11.3153	15 kOhm	2%	
	R....20	58.01.8501	500 Ohm	see note 2	
	R....21	57.11.3821	820 Ohm	2%	
	R....22	57.11.3471	470 Ohm	2%	
	R....23	57.11.3473	47 kOhm	2%	
	R....24	57.11.3101	100 Ohm	2%	
	R....25	57.11.3272	2.7 kOhm	2%	
	R....26	57.11.3222	2.2 kOhm	2%	
	R....27	57.11.3102	1 kOhm	2%	
	R....28	57.11.3103	10 kOhm	2%	
	R....29	57.11.3472	4.7 kOhm	2%	
	R....30	57.11.3102	1 kOhm	2%	
	R....31	57.11.3222	2.2 kOhm	2%	
	R....32	57.11.3683	68 kOhm	2%	
	R....33	57.11.3123	12 kOhm	2%	
	R....34	57.11.3223	22 kOhm	2%	
	R....35	57.11.3153	15 kOhm	2%	
	R....36	57.11.3103	10 kOhm	2%	
	R....37	57.11.3103	10 kOhm	2%	
	R....38	57.11.3333	33 kOhm	2%	
	R....39	57.13.4101	100 Ohm	2%	
	R....40	57.13.4101	100 Ohm	2%	
	R....41	57.11.3101	100 Ohm	2%	
	R....42	57.11.3101	100 Ohm	2%	
	R....43	57.11.3101	100 Ohm	2%	
	R....44	57.11.3162	1.6 kOhm	1%	
	R....45	57.11.3202	2 kOhm	1%	
	R....46	57.11.3824	820 kOhm	2%	
	R....47	57.11.3103	10 kOhm	2%	
	R....48	57.11.3393	39 kOhm	2%	
	R....49	57.11.3222	2.2 kOhm	2%	
	R....50	58.01.8201	200 Ohm	see note 2	
	R....51	57.11.3222	2.2 kOhm	2%	
	R....52	57.11.3101	100 Ohm	2%	
	R....53	57.56.2050	50 mOhm	5%, 3 W, Low Inductance	
	R....54	57.11.3222	2.2 kOhm	2%	
	R....55	57.11.3222	2.2 kOhm	2%	
	R....56	57.11.3332	3.3 kOhm	2%	
	R....57	57.11.3823	82 kOhm	2%	
	R....58	57.11.3222	2.2 kOhm	2%	
	R....59	57.11.3102	1 kOhm	2%	
	R....60	57.11.3102	1 kOhm	2%	
	R....61	57.11.3102	1 kOhm	2%	
	R....62	57.11.3511	510 Ohm	2%	
	R....63	57.11.3479	4.7 Ohm	2%	
	R....64	57.11.3479	4.7 Ohm	2%	
	R....65	57.11.3561	560 Ohm	2%	
	R....66	58.01.8201	200 Ohm	see note 2	
	R....67	57.11.3391	390 Ohm	2%	
	R....68	57.11.3101	100 Ohm	2%	
	R....69	57.11.3473	47 kOhm	2%	
	R....70	57.11.3100	10 Ohm	2%	
	R....71	57.11.3471	470 Ohm	2%	
	R....72	57.11.3391	390 Ohm	2%	
	R....73	57.11.3823	82 kOhm	2%	
	R....74	57.11.3823	82 kOhm	2%	
	R....75	57.11.3823	82 kOhm	2%	
	R....76	57.13.4101	100 Ohm	2%	
	R....77	57.13.4101	100 Ohm	2%	
	R....78	57.13.4101	100 Ohm	2%	
	R....79	57.13.4479	4.7 Ohm	2%	
	R....80	57.11.3472	4.7 kOhm	2%	
	R....81	57.11.3472	4.7 kOhm	2%	
	R....82	57.11.3201	200 Ohm	2%	
	R....83	57.11.3223	22 kOhm	2%	
	T.....1	1.022.291.00		Switching power transformer, 5.6V	St

IND.	POS.NO.	PART NO.	VALUE	SPECIFICATIONS / EQUIVALENT	MANUF.

PETP = Polyesterfilm, El = Electrolytic.

Note 1 - Connector, 8 Contacts:
case: Studer nr. 54.20.0025
Neutrik nr. TI 8
pin: Studer nr. 54.20.0011
Neutrik nr. CS 1g

Note 2 - Connector, 2 Contacts:
case: Studer nr. 54.25.0302
AMP nr. 350777-1
pin: Studer nr. 54.25.0402
AMP nr. 926899-1

Note 3 - Connector, 4 Contacts:
case: Studer nr. 54.25.0304
AMP nr. 926298-3, 926298-1
pin: Studer nr. 54.25.0402
AMP nr. 926899-1

Note 4 - Connector, 8 contacts:
case: Studer nr. 54.25.0308
AMP nr. 926301-3
pin: Studer nr. 54.25.0402
AMP nr. 926899-1

Note 5 - Connector,10 contacts:
case: Studer nr. 54.25.0310
AMP nr. 926302-3
pin: Studer nr. 54.25.0402
AMP nr. 926899-1

Note 6 - Connector,10 contacts:
case: Studer nr. 54.25.0310
AMP nr. 926302-3

IND.	POS.NO.	PART NO.	VALUE	SPECIFICATIONS / EQUIVALENT	MANUF.

8 pins: Studer nr. 54.25.0402
AMP nr. 926899-1
1 pin : Studer nr. 54.25.0401
AMP nr. 926887-1

Note 7 - Connector,10 contacts:
case: Studer nr. 54.25.0310
AMP nr. 926302-3
6 pins: Studer nr. 54.25.0402
AMP nr. 926899-1
1 pin : Studer nr. 54.25.0401
AMP nr. 926887-1

Note 8 - Connector,10 contacts:
case: Studer nr. 54.14.2001
Yamaichi nr. FAP-10-08-4055
Burndy nr. BFH 9 310 B00 GS
3M nr. 7610-6002 VZ

Note 1 - Connector, 10 contacts with Interlock: Siemens nr. V 23535 - A2700 - A102
Thomas+ Betts 501 - 1027 - ES

Note 2 - Potentiometer, 200 Ohm: Bourne nr. 3386 F-1-201
A. Bradley nr. E 2 B 201
Spectrol nr. 63 M 201 T 010
Murata nr. POT 3104 F-1-201

Note 3 - Potentiometer, 2 kOhm: Bourne nr. 3386 F-1-202
A. Bradley nr. E 2 B 202
Spectrol nr. 63 M 202 T 010
Murata nr. POT 3104 F-1-202

Note 4 - Potentiometer, 10 kOhm: Bourne nr. 3386 F-1-103
A. Bradley nr. E 2 B 103
Spectrol nr. 63 M 103 T 010
Murata nr. POT 3104 F-1-103

IND.	POS.NO.	PART NO.	VALUE	SPECIFICATIONS / EQUIVALENT	MANUF.

El=Electrolytic, MPETP=Metalized Polyesterfilm, PETP=Polyesterfilm,
PP=Polypropylene, Sal=Solid aluminium

MANUFACTURER: Fc=Fairchild, ITT=Intermetall, IR=International Rectifier,
Mot=Motorola, NS=National Semiconductors, Ph=Philips,
RCA=RCA Corp. of America, Ses=Seescosem, SGS=SGS/Ates,
Sie=Siemens, Six=Siliconix, St=Studer, Tf=Telefunken,
Tho=Thomson CSF, TI=Texas Instruments, To=Toshiba,
GI=General Instruments.

ORIG 88/01/21 (00) 90/02/12

BLOCK DIAGRAM
STABILIZER ± 15V/+24V 1.820.873

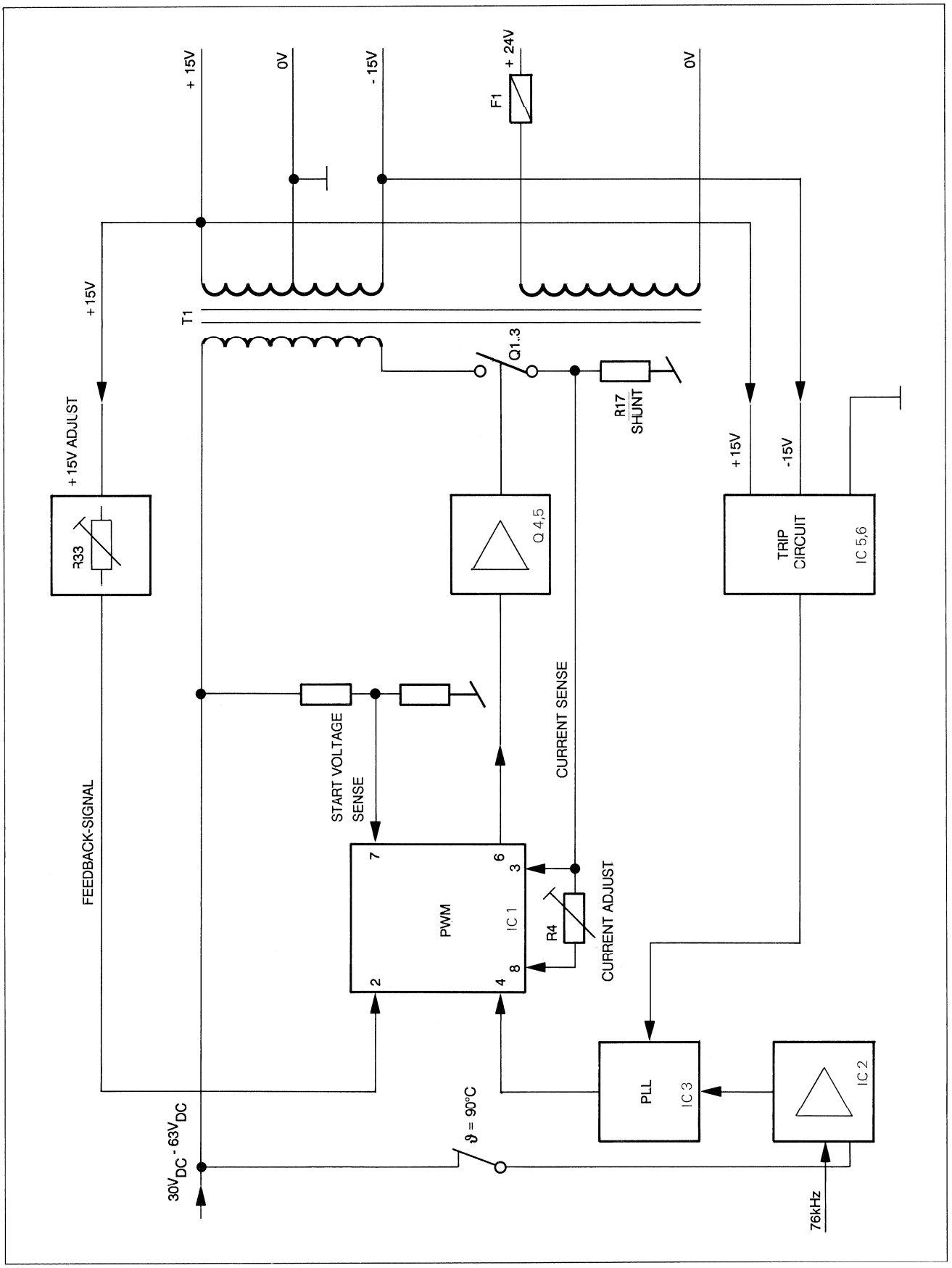

STABILIZER ± 15V/+24V 1.820.873.00

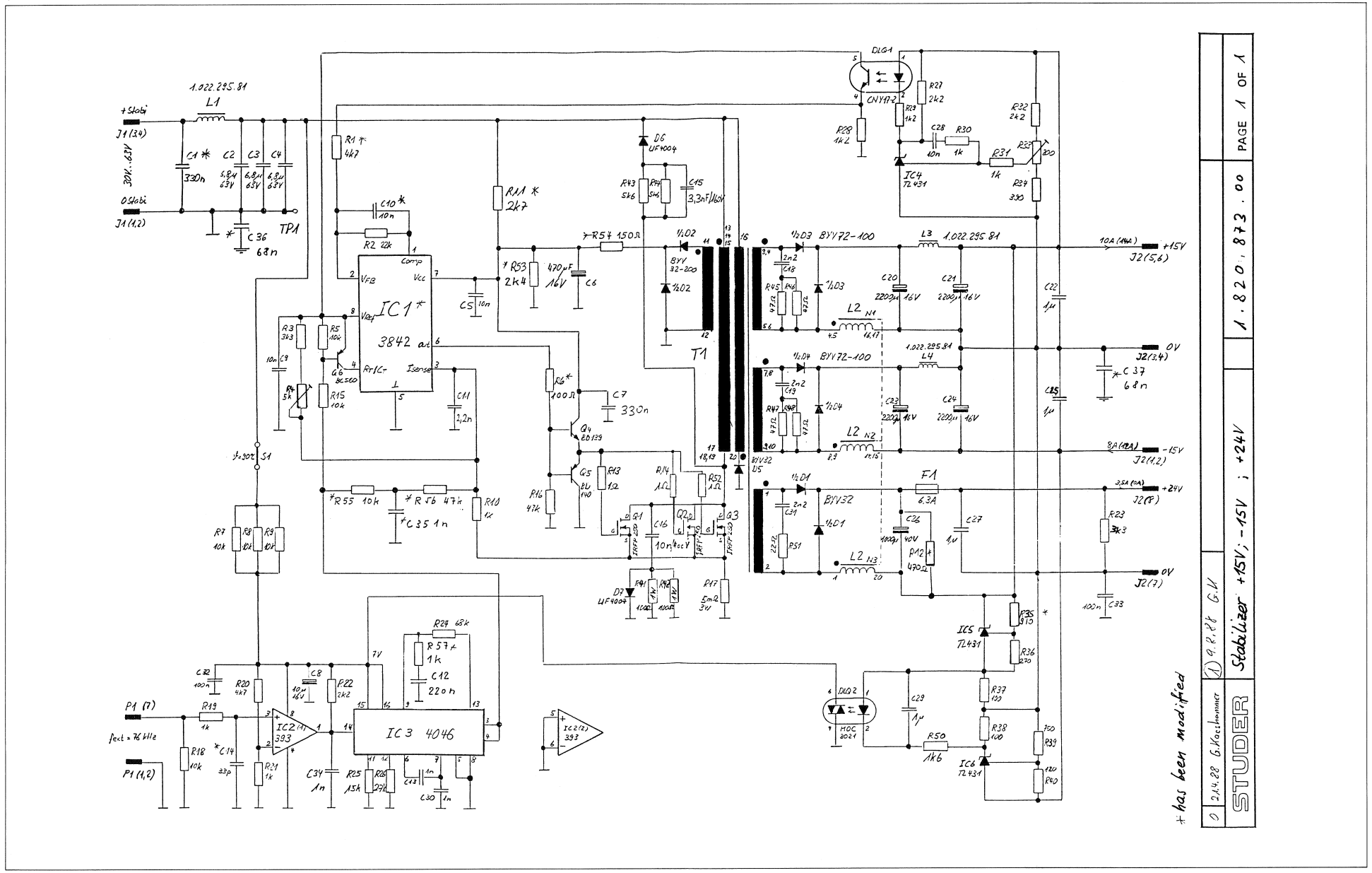

STABILIZER ± 15V/+24V 1.820.873.00

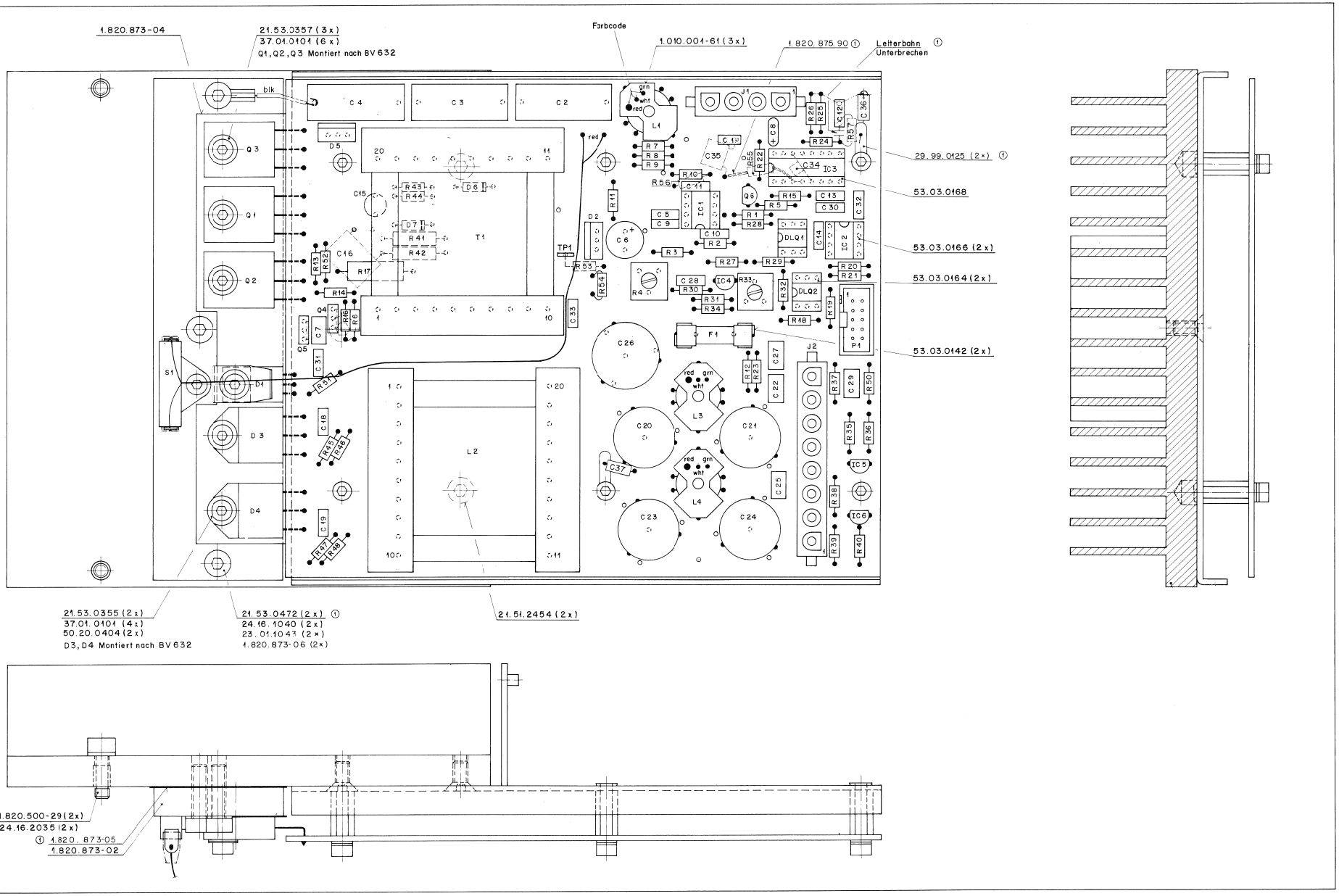

STABILIZER ± 15V/+24V 1.820.873.00

IND.	POS.NO.	PART NO.	VALUE	SPECIFICATIONS / EQUIVALENT	MANUF.
(00)	C....1	59.22.8100	10 uF	20%, 63V, El	
(01)	C....1	59.36.0334	330 nF	10%, 63V, PETP	
	C....2	59.31.5685	6.8 uF	10%, 63V, MPETP	
	C....3	59.31.5685	6.8 uF	10%, 63V, MPETP	
	C....4	59.31.5685	6.8 uF	10%, 63V, MPETP	
	C....5	59.06.0103	10 nF	10%, 63V, PETP	
	C....6	59.22.4471	470 uF	20%, 16V, EL	
	C....7	59.36.0334	330 nF	10%, 63V, PETP	
	C....8	59.26.2100	10 uF	20%, 16V, Sal	
	C....9	59.06.0103	10 nF	10%, 63V, PETP	
(00)	C....10	59.06.0102	1 nF	10%, 63V, PETP	
(01)	C....10	59.06.0103	10 nF	10%, 63V, PETP	
	C....11	59.06.0222	2.2 nF	10%, 63V, PETP	
	C....12	59.06.0224	220 nF	10%, 63V, PETP	
	C....13	59.06.0102	1 nF	10%, 63V, PETP	
	C....14	59.34.2330	33 pF	5%, N150, CER	
	C....15	59.05.2332	3.3 nF	2.5%, 160V, PP	
(00)	C....16	59.05.2102	1 nF	2.5%, 630V, PP	
(01)	C....16	59.05.6103	10 nF	10%, 400V, MPP	
(00)	C....17	59.06.0103	10 nF	10%, 63V, PETP	
(01)	C....17		not used		
	C....18	59.06.0222	2.2 nF	10%, 63V, PETP	
	C....19	59.06.0222	2.2 nF	10%, 63V, PETP	
	C....20	59.28.2222	2200 uF	10%, 63V, PETP	
	C....21	59.28.2222	2200 uF	10%, 16V, PETP	
	C....22	59.06.0105	1 uF	10%, 50V, PETP	
	C....23	59.28.2222	2200 uF	20%, 16V, El	
	C....24	59.28.2222	2200 uF	20%, 16V, El	
	C....25	59.06.0105	1 uF	10%, 50V, PETP	
	C....26	59.28.4102	1000 uF	20%, 40V, El	
	C....27	59.06.0105	1 uF	10%, 50V, PETP	
	C....28	59.06.0103	10 nF	10%, 63V, PETP	
	C....29	59.06.0105	1 uF	10%, 50V, PETP	
	C....30	59.06.0102	1 nF	10%, 63V, PETP	
	C....31	59.06.0222	2.2 nF	10%, 63V, PETP	
	C....32	59.06.0104	100 nF	10%, 63V, PETP	
	C....33	59.06.0104	100 nF	10%, 63V, PETP	

IND.	POS.NO.	PART NO.	VALUE	SPECIFICATIONS / EQUIVALENT	MANUF.
(01)	C....34	59.32.4102	1 nF	20%, 50V, Cer	
(01)	C....35	59.06.0102	1 nF	10%, 63V, PETP	
(01)	C....36	59.99.0246	68 nF	-20%, 63V, Cer	
(01)	C....37	59.99.0246	68 nF	-20%, 63V, Cer	
	D....1	50.04.0517	BYV 32-200		Ph, Mot
	D....2	50.04.0517	BYV 32-200		Ph, Mot
	D....3	50.04.0522	BYV72-100	BYW99P-100	Tho, Ph, Mot
	D....4	50.04.0522	BYV72-100	BYW99P-100	Tho, Ph, Mot
	D....5	50.04.0517	BYV 32-200		Ph, Mot
	D....6	50.04.0138	UF 4004	BYN 01-400	
	D....7	50.04.0138	UF 4004	BYN 01-400	
	DL....1	50.04.3200	CNY17-2		Sie
	DL....2	50.04.2139	MOC 3021		Mot
	F....1	51.01.0125	Fuse 6.3A		
(00)	IC....1	50.10.0113	IP 3843N		Un,IPS
(01)	IC....1	50.10.0114	IP 3842N		Un,SGS
	IC....2	50.05.0283	LM 393		
(00)	IC....3	50.07.0046	MC14046BPC	... 4046 ...	Mot
(02)	IC....3	50.07.1046	MC14046BPC		Mot
	IC....4	50.10.0106	TL 431 CL	P	Mot,TI
	IC....5	50.10.0106	TL 431 CL	P	Mot,TI
	IC....6	50.10.0106	TL 431 CL	P	Mot,TI
	J....1	54.25.0004	4 cont.	AMP nr. 826848-3 or 826848-1	
	J....2	54.25.0008	8 cont.	AMP nr. 826851-3	
	L....1	1.322.295.81		Filter coil	St
	L....2	1.322.606.00		CHOKE +15V/-15V	St
	L....3	1.322.295.81		Filter coil	St
	L....4	1.322.295.81		Filter coil	St
(00)	L....5	52.32.1822	8.2 mH,	5%,D8	
(01)	L....5		not used		

IND.	POS.NO.	PART NO.	VALUE	SPECIFICATIONS / EQUIVALENT	MANUF.
	P....1	54.14.2001	10 cont.	see note 1	
	Q....1	50.03.1612	IRF P250		IR
	Q....2	50.03.1612	IRF P250		IR
	Q....3	50.03.1612	IRF P250		IR
	Q....4	50.03.0451	BD 139		any
	Q....5	50.03.0452	BD 140		any
	Q....6	50.03.0496	BC 560		any
(00)	R....1	57.11.3102	1 kOhm	1%	
(01)	R....1	57.11.3472	4.7 kOhm	1%	
	R....2	57.11.3223	22 kOhm	1%	
	R....3	57.11.3332	3.3 kOhm	1%	
	R....4	58.01.6502	5 kOhm	see note 2	
	R....5	57.11.3103	10 kOhm	1%	
(00)	R....6	57.11.3109	1 Ohm	1%	
(01)	R....6	57.11.3101	100 Ohm	1%	
	R....7	57.11.3103	10 kOhm	1%	
	R....8	57.11.3103	10 kOhm	1%	
	R....9	57.11.3103	10 kOhm	1%	
	R....10	57.11.3102	1 kOhm	1%	
(00)	R....11	57.11.3103	10 kOhm	1%	
(01)	R....11	57.11.3272	2.7 kOhm	1%	
(00)	R....12	57.11.3332	3.3 kOhm	1%	
(01)	R....12	57.11.3471	470 Ohm	1%	
	R....13	57.11.3109	1 Ohm	1%	
	R....14	57.11.3109	1 Ohm	1%	
	R....15	57.11.3103	10 kOhm	1%	
	R....16	57.11.3473	47 kOhm	1%	
	R....17	57.56.2005	5 mOhm	5%, 3 W, Low Inductance	
	R....18	57.11.3103	10 kOhm	1%	
	R....19	57.11.3102	1 kOhm	1%	
	R....20	57.11.3472	4.7 kOhm	1%	
	R....21	57.11.3102	1 kOhm	1%	
	R....22	57.11.3222	2.2 kOhm	1%	
	R....23	57.11.3332	3.3 kOhm	1%	
	R....24	57.11.3683	68 kOhm	1%	

IND.	POS.NO.	PART NO.	VALUE	SPECIFICATIONS / EQUIVALENT	MANUF.
(00)	R....25	57.11.3333	33 kOhm	1%	
(01)	R....25	57.11.3153	15 kOhm	1%	
(00)	R....26	57.11.3153	15 kOhm	1%	
(01)	R....26	57.11.3273	27 kOhm	1%	
	R....27	57.11.3222	2.2 kOhm	1%	
	R....28	57.11.3122	1.2 kOhm	1%	
	R....29	57.11.3122	1.2 kOhm	1%	
	R....30	57.11.3102	1 kOhm	1%	
	R....31	57.11.3102	1 kOhm	1%	
	R....32	57.11.3222	2.2 kOhm	1%	
	R....33	58.01.8201	200 Ohm	see not 3	
	R....34	57.11.3391	390 Ohm	1%	
(00)	R....35	57.11.3102	1 kOhm	1%	
(01)	R....35	57.11.3911	910 Ohm	1%	
	R....36	57.11.3271	270 Ohm	1%	
	R....37	57.11.3101	100 Ohm	1%	
	R....38	57.11.3101	100 Ohm	1%	
	R....39	57.11.3751	750 Ohm	1%	
	R....40	57.11.3121	120 Ohm	1%	
	R....41	57.13.4101	100 Ohm	2%	
	R....42	57.13.4101	100 Ohm	2%	
	R....43	57.11.3562	5.6 kOhm	1%	
	R....44	57.11.3562	5.6 kOhm	1%	
	R....45	57.11.3470	47 Ohm	1%	
	R....46	57.11.3470	47 Ohm	1%	
	R....47	57.11.3470	47 Ohm	1%	
	R....48	57.11.3470	47 Ohm	1%	
(00)	R....49	57.11.3223	22 kOhm	1%	
(01)	R....49		not used		
	R....50	57.11.3162	1.6 kOhm	1%	
	R....51	57.11.3220	22 Ohm	1%	
	R....52	57.11.3109	1 Ohm	1%	
(01)	R....53	57.11.3242	2.4 kOhm	1%	
(01)	R....54	57.11.5151	150 Ohm	1%	
(01)	R....55	57.11.3103	10 kOhm	1%	
(01)	R....56	57.11.3473	47 kOhm	1%	
(01)	R....57	57.11.3102	1 kOhm	1%	

IND.	POS.NO.	PART NO.	VALUE	SPECIFICATIONS / EQUIVALENT	MANUF.
	S....1	56.19.0005		Thermo switch, Tokin nr. OHD 3 - 90 BU	
	T....1	1.322.299.00		Switching Power Trasformator 2 * 15 V	St
	TP....1	54.02.0320		Test Point	

(01) 09.08.88 Improved interference suppression and power up noise.

(02) 07.04.89 Improved tolerance of lockin-range of PLL.

Note 1 - Connector, 10 contacts: Yamaichi nr. FAP-10-08-40 SS
Burndy nr. BPH 9 B 10 B 00 GS
3M nr. 7610-6002 VZ

Note 2 - Potentiometer, 5 kOhm: Bourns nr. 3386 F-1-502
A. Bradley nr. E 2 B 502
Spectrol nr. 63 M 502 T 010
Murata nr. POT 3104 F-1-502

NOTE 3 - Potentiometer, 200 Ohm: Bourns nr. 3386 F-1-201
A. Bradley nr. E 2 B 201
Spectrol nr. 63 M 201 T 010
Murata nr. POT 3104 F-1-201

El=Electrolytic, MPETP=Metalized Polyesterfilm, PETP=Polyesterfilm,
MPP=Metalized Polypropylene, PP=Polypropylene, Sal=Solid aluminium,
Cer=Ceramic.

MANUFACTURER: Fc=Fairchild, ITT=Intermetall, IR=International Rectifier,
Mot=Motorola, NS=National Semiconductors, Ph=Philips,
RCA=RCA Corp. of America, Ses=Sescosem, SGS=SGS/Ates,
Sie=Siemens, Six=Siliconix, St=Studer, Tf=Telefunken,
Tho=Thomson CSF, TI=Texas Instruments, To=Toshiba,
GI=General Instruments, Un=Unitrode.

DRIG 88/02/17 (01) 88/08/09 (02) 89/04/07

STABILIZER = 15V/+24V 1.820.873.81

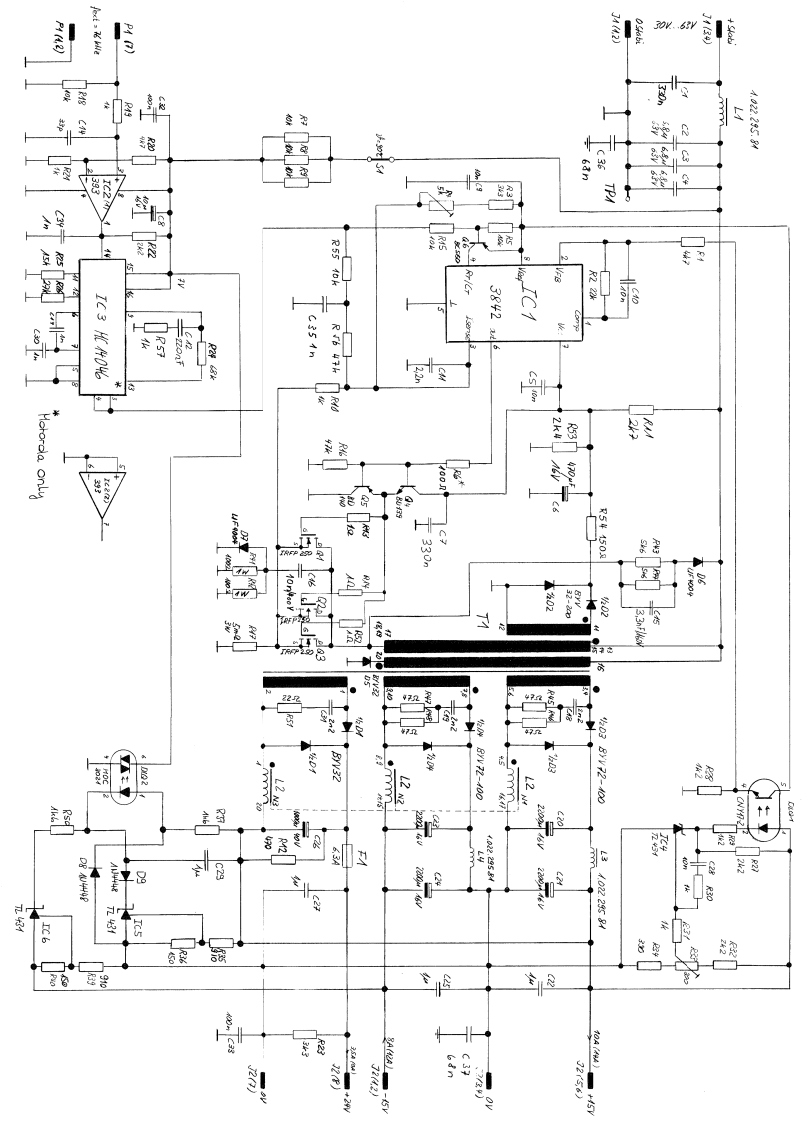

0	21.2.89	ABschl			
STUDER	Stabilizer +15V; -15V ; +24V			1.820.873.81	PAGE 1 OF 1

STABILIZER ± 15V/+24V 1.820.873.81

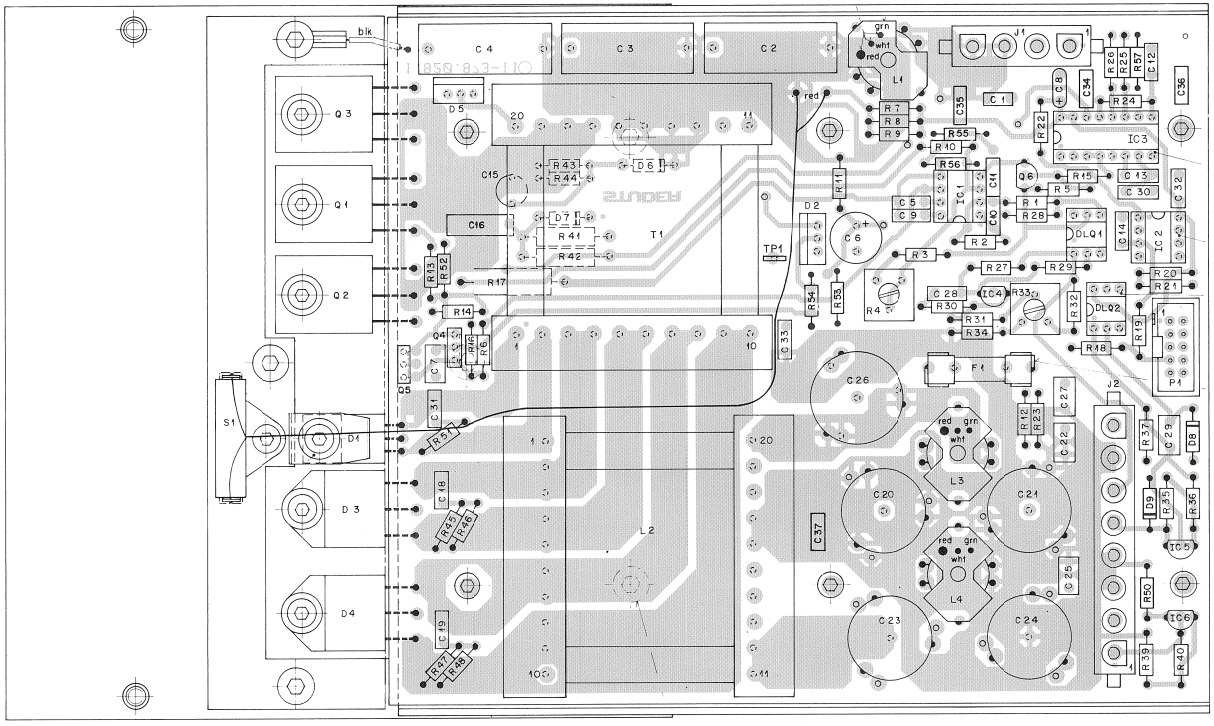

IND.	POS.NO.	PART NO.	VALUE	SPECIFICATIONS / EQUIVALENT	MANUF.
	Q....5	50.03.0452	BD 140		any
	Q....6	50.03.0496	BC 560		any
	R....1	57.11.3472	4.7 kOhm	1%	
	R....2	57.11.3223	22 kOhm	1%	
	R....3	57.11.3332	3.3 kOhm	1%	
	R....4	58.01.8502	5 kOhm	see note 2	
	R....5	57.11.3103	10 kOhm	1%	
	R....6	57.11.3101	100 Ohm	1%	
	R....7	57.11.3103	10 kOhm	1%	
	R....8	57.11.3103	10 kOhm	1%	
	R....9	57.11.3103	10 kOhm	1%	
	R...10	57.11.3102	1 kOhm	1%	
	R...11	57.11.3272	2.7 kOhm	1%	
	R...12	57.11.3471	470 Ohm	1%	
	R...13	57.11.3109	1 Ohm	1%	
	R...14	57.11.3109	1 Ohm	1%	
	R...15	57.11.3103	10 kOhm	1%	
	R...16	57.11.3473	47 kOhm	1%	
	R...17	57.56.2005	5 mOhm	5%, 3 W, Low Inductance	
	R...18	57.11.3103	10 kOhm	1%	
	R...19	57.11.3102	1 kOhm	1%	
	R...20	57.11.3472	4.7 kOhm	1%	
	R...21	57.11.3102	1 kOhm	1%	
	R...22	57.11.3222	2.2 kOhm	1%	
	R...23	57.11.3332	3.3 kOhm	1%	
	R...24	57.11.3683	68 kOhm	1%	
	R...25	57.11.3153	15 kOhm	1%	
	R...26	57.11.3273	27 kOhm	1%	
	R...27	57.11.3222	2.2 kOhm	1%	
	R...28	57.11.3122	1.2 kOhm	1%	
	R...29	57.11.3122	1.2 kOhm	1%	
	R...30	57.11.3102	1 kOhm	1%	
	R...31	57.11.3102	1 kOhm	1%	
	R...32	57.11.3222	2.2 kOhm	1%	
	R...33	58.01.8201	200 Ohm	see not 3	
	R...34	57.11.3391	390 Ohm	1%	

IND.	POS.NO.	PART NO.	VALUE	SPECIFICATIONS / EQUIVALENT	MANUF.
	R...35	57.11.3911	910 Ohm	1%	
	R...36	57.11.3151	150 Ohm	1%	
	R...37	57.11.3162	1.6 kOhm	1%	
	R...38		not used		
	R...39	57.11.3911	910 Ohm	1%	
	R...40	57.11.3151	150 Ohm	1%	
	R...41	57.13.4101	100 Ohm	2%	
	R...42	57.13.4101	100 Ohm	2%	
	R...43	57.11.3562	5.6 kOhm	1%	
	R...44	57.11.3562	5.6 kOhm	1%	
	R...45	57.11.3470	47 Ohm	1%	
	R...46	57.11.3470	47 Ohm	1%	
	R...47	57.11.3470	47 Ohm	1%	
	R...48	57.11.3470	47 Ohm	1%	
	R...49		not used		
	R...50	57.11.3162	1.6 kOhm	1%	
	R...51	57.11.3220	22 Ohm	1%	
	R...52	57.11.3109	1 Ohm	1%	
	R...53	57.11.3242	2.4 kOhm	1%	
	R...54	57.11.3151	150 Ohm	1%	
	R...55	57.11.3103	10 kOhm	1%	
	R...56	57.11.3473	47 kOhm	1%	
	R...57	57.11.3102	1 kOhm	1%	
	S....1	55.19.0005		Thermo switch, Tokin nr. OHD 3 - 90 B9	
	T....1	1.022.299.00		Switching Power Transformator 2 x 15 V	St
	TP...1	54.02.0320		Test Point	

IND.	POS.NO.	PART NO.	VALUE	SPECIFICATIONS / EQUIVALENT	MANUF.
	C....1	59.06.0334	330 nF	10%, 63V, PETP	
	C....2	59.31.5685	6.8 uF	10%, 63V, MPETP	
	C....3	59.31.5685	6.8 uF	10%, 63V, MPETP	
	C....4	59.31.5685	6.8 uF	10%, 63V, MPETP	
	C....5	59.06.0103	10 nF	10%, 63V, PETP	
	C....6	59.22.4471	470 uF	20%, 16V, EL	
	C....7	59.06.0334	330 nF	10%, 63V, PETP	
	C....8	59.26.2100	10 uF	20%, 16V, Sal	
	C....9	59.06.0103	10 nF	10%, 63V, PETP	
	C...10	59.06.0103	10 nF	10%, 63V, PETP	
	C...11	59.06.0222	2.2 nF	10%, 63V, PETP	
	C...12	59.06.0224	220 nF	10%, 63V, PETP	
	C...13	59.06.0102	1 nF	10%, 63V, PETP	
	C...14	59.34.2330	33 pF	5%, N150, CER	
	C...15	59.05.2332	3.3 nF	2.5%, 160V, PP	
	C...16	59.05.6103	10 nF	10%, 400V, MPP	
	C...17		not used		
	C...18	59.06.0222	2.2 nF	10%, 63V, PETP	
	C...19	59.06.0222	2.2 nF	10%, 63V, PETP	
	C...20	59.28.2222	2200 uF	10%, 63V, PETP	
	C...21	59.28.2222	2200 uF	10%, 16V, PETP	
	C...22	59.06.0105	1 uF	10%, 50V, PETP	
	C...23	59.28.2222	2200 uF	20%, 16V, El	
	C...24	59.28.2222	2200 uF	20%, 16V, El	
	C...25	59.06.0105	1 uF	10%, 50V, PETP	
	C...26	59.28.4102	1000 uF	20%, 40V, El	
	C...27	59.06.0105	1 uF	10%, 50V, PETP	
	C...28	59.06.0103	10 nF	10%, 63V, PETP	
	C...29	59.06.0105	1 uF	10%, 50V, PETP	
	C...30	59.06.0102	1 nF	10%, 63V, PETP	
	C...31	59.06.0222	2.2 nF	10%, 63V, PETP	
	C...32	59.06.0104	100 nF	10%, 63V, PETP	
	C...33	59.06.0104	100 nF	10%, 63V, PETP	
	C...34	59.12.4102	1 nF	20%, 50V, Cer	
	C...35	59.06.0102	1 nF	10%, 63V, PETP	
	C...36	59.59.0246	68 nF	-20%, 63V, Cer	
	C...37	59.59.0246	68 nF	-20%, 63V, Cer	

IND.	POS.NO.	PART NO.	VALUE	SPECIFICATIONS / EQUIVALENT	MANUF.
	D....1	50.04.0517	BYV 32-200		Ph, Mot
	D....2	50.04.0517	BYV 32-200		Ph, Mot
	D....3	50.04.0522	BYV72-100	BYW99P-100	Tho, Ph, Mot
	D....4	50.04.0522	BYV72-100	BYW99P-100	Tho, Ph, Mot
	D....5	50.04.0517	BYV 32-200		Ph, Mot
	D....6	50.04.0138	UF 4004	BYS 01-400	
	D....7	50.04.0138	UF 4004	BYS 01-400	
	D....8	50.04.0125	1 N 4448		Fe,ITT,Ph,SES,Tf
	D....9	50.04.0125	1 N 4448		Fe,ITT,Ph,SES,Tf
	DLQ...1	50.04.3200	CNY17-2		Sie
	DLQ...2	50.04.2139	MOC 3021		Mot
	F....1	51.01.0125	Fuse 6.3A		
	IC....1	50.10.0114	IP 3842N		Un,SGS
	IC....2	50.05.0283	LM 393		
	IC....3	50.07.1046	MC 14046BE		Mot Only
	IC....4	50.10.0106	TL 431 CL	P	Mot,TI
	IC....5	50.10.0106	TL 431 CL	P	Mot,TI
	IC....6	50.10.0106	TL 431 CL	P	Mot,TI
	J....1	54.25.0004	4 cont.	AMP nr. 826848-3 or 826848-1	
	J....2	54.25.0008	8 cont.	AMP nr. 826851-3	
	L....1	1.022.295.81		Filter coil	St
	L....2	1.022.606.00		CHOKE +15V/-15V	St
	L....3	1.022.295.81		Filter coil	St
	L....4	1.022.295.81		Filter coil	St
	L....5		not used		
	P....1	54.14.2601	10 cont.	see note 1	
	Q....1	50.03.1612	IRF P250		IR
	Q....2	50.03.1612	IRF P250		IR
	Q....3	50.03.1612	IRF P250		IR
	Q....4	50.03.0451	BD 139		any

Note 1 - Connector, 10 contacts: Yamaichi nr. FAP-10-08-40 SS
Burndy nr. BPH 9 B 10 B 00 GS
3M nr. 7610-6002 VZ

Note 2 - Potentiometer, 5 kOhm: Bourns nr. 3386 F-1-502
A. Bradley nr. E 2 B 502
Spectrol nr. 63 M 502 T 010
Murata nr. POT 3104 F-1-502

NOTE 3 - Potentiometer, 200 Ohm: Bourns nr. 3386 F-1-201
A. Bradley nr. E 2 B 201
Spectrol nr. 63 M 201 T 010
Murata nr. POT 3104 F-1-201

El=Electrolytic, MPETP=Metalized Polyesterfilm, PETP=Polyesterfilm,
MPP=Metalized Polypropylene, PP=Polypropylene, Sal=Solid aluminium,
Cer=Ceramic.

MANUFACTURER: Fe=Fairchild, ITT=Intermetall, IR=International Rectifier,
Mot=Motorola, NS=National Semiconductors, Ph=Philips,
RCA=RCA Corp. of America, Ses=Sescosem, SGS=SGS/Ates,
Sie=Siemens, Sis=Siliconix, St=Studer, Tf=Telefunken,
Tho=Thomson CSF, TI=Texas Instruments, To=Toshiba,
GI=General Instruments, Un=Unitrode.

ORIG 89/02/21

DISTRIBUTION BOARD TD 1.820.865.00

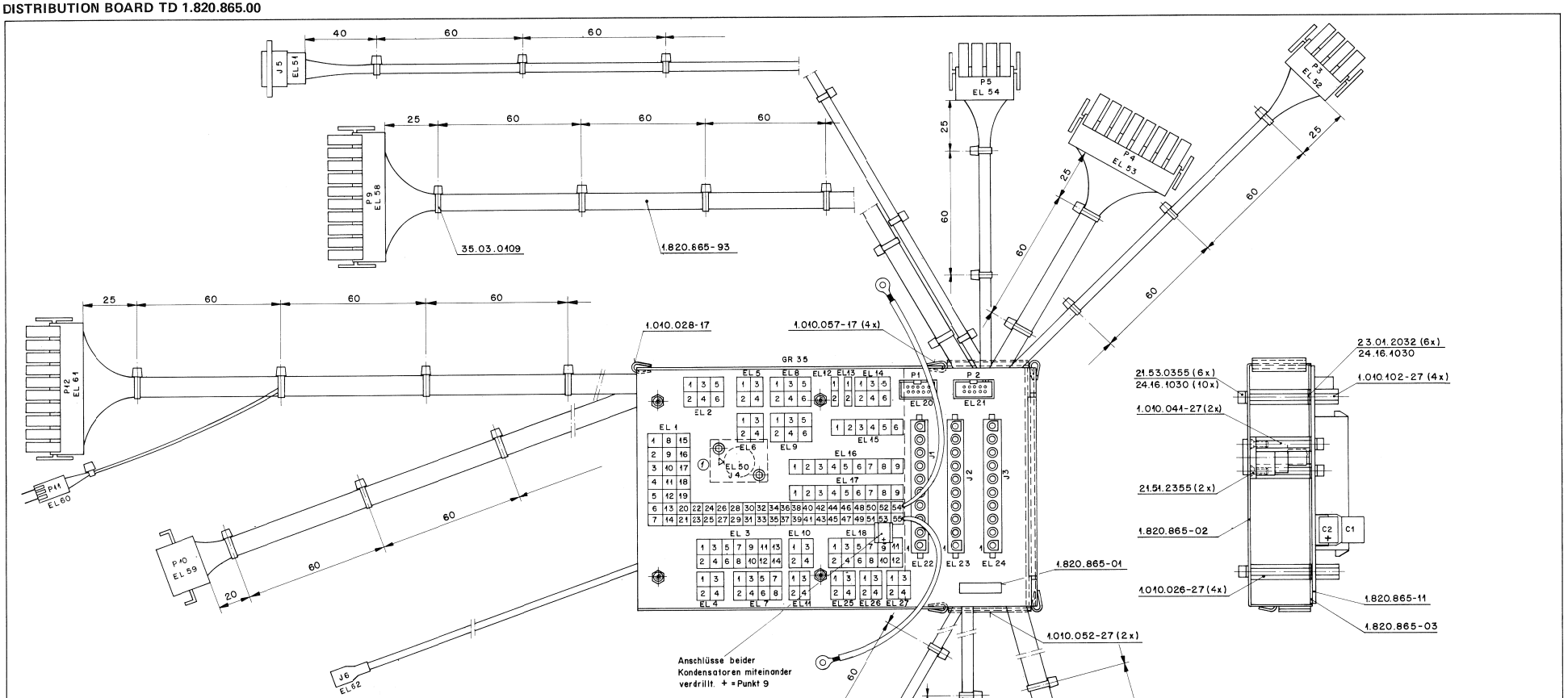

IND.	POS.NO.	PART NO.	VALUE	SPECIFICATIONS / EQUIVALENT	MANUF.
(01)	C.....1	59.03.2104	0.1 uF	10%, 250V, PETP	
(01)	C.....2	59.25.1221	220 uF	6.3V, El	
	J.....1	54.25.0010		AMP nr. 826852-3	
	J.....2	54.25.0010		AMP nr. 826852-3	
	J.....3	54.25.0010		AMP nr. 826852-3	
	J.....4			see note 1	
	J.....5			see note 1	
	J.....6	54.02.0332		AMP nr. 2-160 256 - 2	
	P.....1			see note 8	
	P.....2			see note 8	
	P.....3			see note 3	
	P.....4			see note 4	
	P.....5			see note 3	
	P.....6			see note 5	
	P.....7			see note 2	
	P.....8			see note 3	
	P.....9			see note 6	
	P....10	54.02.0416		Molex nr. 03-06-1241	
	P....11	54.01.0260		AMP nr. 163.690-1	
	P....12			see note 7	

PETP = Polyesterfilm, El = Electrolytic.

Note 1 - Connector, 8 Contacts:
case: Studer nr. 54.20.0025
Neutrik nr. TI 8
pin: Studer nr. 54.20.0011
Neutrik nr. CS 1g

Note 2 - Connector, 2 Contacts:
case: Studer nr. 54.25.0302
AMP nr. 350777-1
pin: Studer nr. 54.25.0402
AMP nr. 926899-1

Note 3 - Connector, 4 Contacts:
case: Studer nr. 54.25.0304
AMP nr. 926298-3, 926298-1
pin: Studer nr. 54.25.0402
AMP nr. 926899-1

Note 4 - Connector, 8 contacts:
case: Studer nr. 54.25.0308
AMP nr. 926301-3
pin: Studer nr. 54.25.0402
AMP nr. 926899-1

Note 5 - Connector,10 contacts:
case: Studer nr. 54.25.0310
AMP nr. 926302-3
pin: Studer nr. 54.25.0402
AMP nr. 926899-1

Note 6 - Connector,10 contacts:
case: Studer nr. 54.25.0310
AMP nr. 926302-3

IND.	POS.NO.	PART NO.	VALUE	SPECIFICATIONS / EQUIVALENT	MANUF.

8 pins: Studer nr. 54.25.0402
AMP nr. 926899-1
1 pin : Studer nr. 54.25.0401
AMP nr. 926887-1

Note 7 - Connector,10 contacts:
case: Studer nr. 54.25.0310
AMP nr. 926302-3
6 pins: Studer nr. 54.25.0402
AMP nr. 926899-1
1 pin : Studer nr. 54.25.0401
AMP nr. 926887-1

Note 8 - Connector,10 contacts:
case: Studer nr. 54.14.2001
Yamaichi nr. FAP-10-08-40SS
Burndy nr. BPH 9 B10 B00 GS
3M nr. 7610-6002 VZ

ORIG 86/10/17 (01) 87/05/06

DISTRIBUTION BOARD TD 1.820.865.81

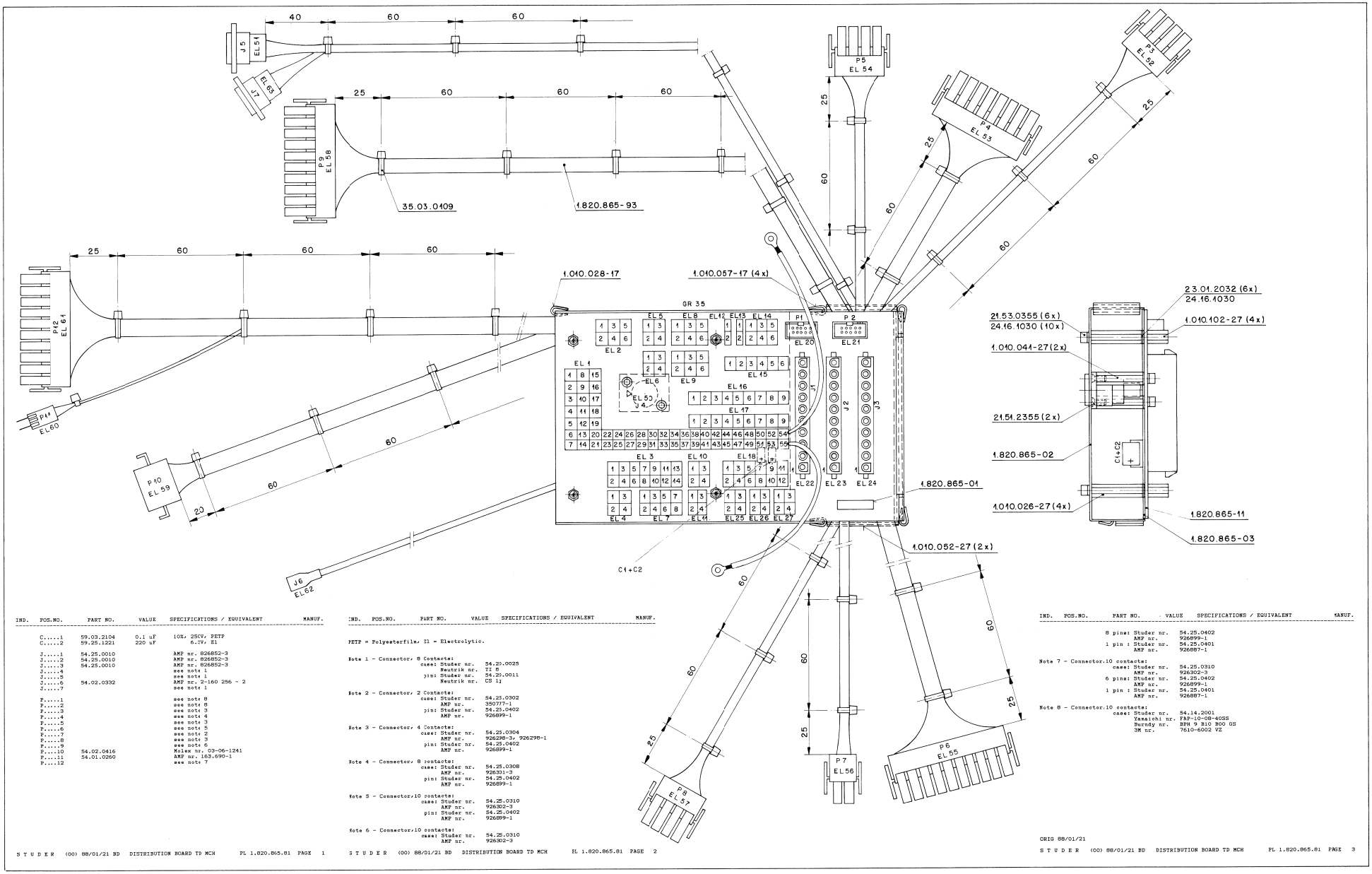

IND.	POS.NO.	PART NO.	VALUE	SPECIFICATIONS / EQUIVALENT	MANUF.
	C.....1	59.03.2104	0.1 uF	10%, 25CV, PETP	
	C.....2	59.25.1221	220 uF	6.3V, El	
	J.....1	54.25.0010		AMP nr. 826852-3	
	J.....2	54.25.0010		AMP nr. 826852-3	
	J.....3	54.25.0010		AMP nr. 826852-3	
	J.....4			see note 1	
	J.....5			see note 1	
	J.....6	54.02.0332		AMP nr. 2-160 256 - 2	
	J.....7			see note 1	
	P.....1			see note 8	
	P.....2			see note 8	
	P.....3			see note 3	
	P.....4			see note 4	
	P.....5			see note 3	
	P.....6			see note 5	
	P.....7			see note 2	
	P.....8			see note 3	
	P.....9			see note 6	
	P....10	54.02.0416		Molex nr. 03-06-1241	
	P....11	54.01.0260		AMP nr. 163.690-1	
	P....12			see note 7	

PETP = Polyesterfilm, El = Electrolytic.

Note 1 - Connector, 8 Contacts:
case: Studer nr. 54.29.0025
Neutrik nr. TI 8
pin: Studer nr. 54.29.0011
Neutrik nr. CS 1;

Note 2 - Connector, 2 Contacts:
case: Studer nr. 54.25.0302
AMP nr. 350777-1
pin: Studer nr. 54.25.0402
AMP nr. 926899-1

Note 3 - Connector, 4 Contacts:
case: Studer nr. 54.25.0304
AMP nr. 926298-3, 926298-1
pin: Studer nr. 54.25.0402
AMP nr. 926899-1

Note 4 - Connector, 8 contacts:
case: Studer nr. 54.25.0308
AMP nr. 926301-3
pin: Studer nr. 54.25.0402
AMP nr. 926899-1

Note 5 - Connector,10 contacts:
case: Studer nr. 54.25.0310
AMP nr. 926302-3
pin: Studer nr. 54.25.0402
AMP nr. 926899-1

Note 6 - Connector,10 contacts:
case: Studer nr. 54.25.0310
AMP nr. 926302-3

Note 7 - Connector,10 contacts:
case: Studer nr. 54.25.0310
AMP nr. 926302-3
6 pins: Studer nr. 54.25.0402
AMP nr. 926899-1
1 pin : Studer nr. 54.25.0401
AMP nr. 926887-1

Note 8 - Connector,10 contacts:
case: Studer nr. 54.14.2001
Yamaichi nr. FAP-10-08-40SS
Burndy nr. RPM 9 B10 B00 GS
3M nr. 7610-6002 VZ

ORIG 88/01/21

BASIS BOARD TAPE DECK 1.820.704.00

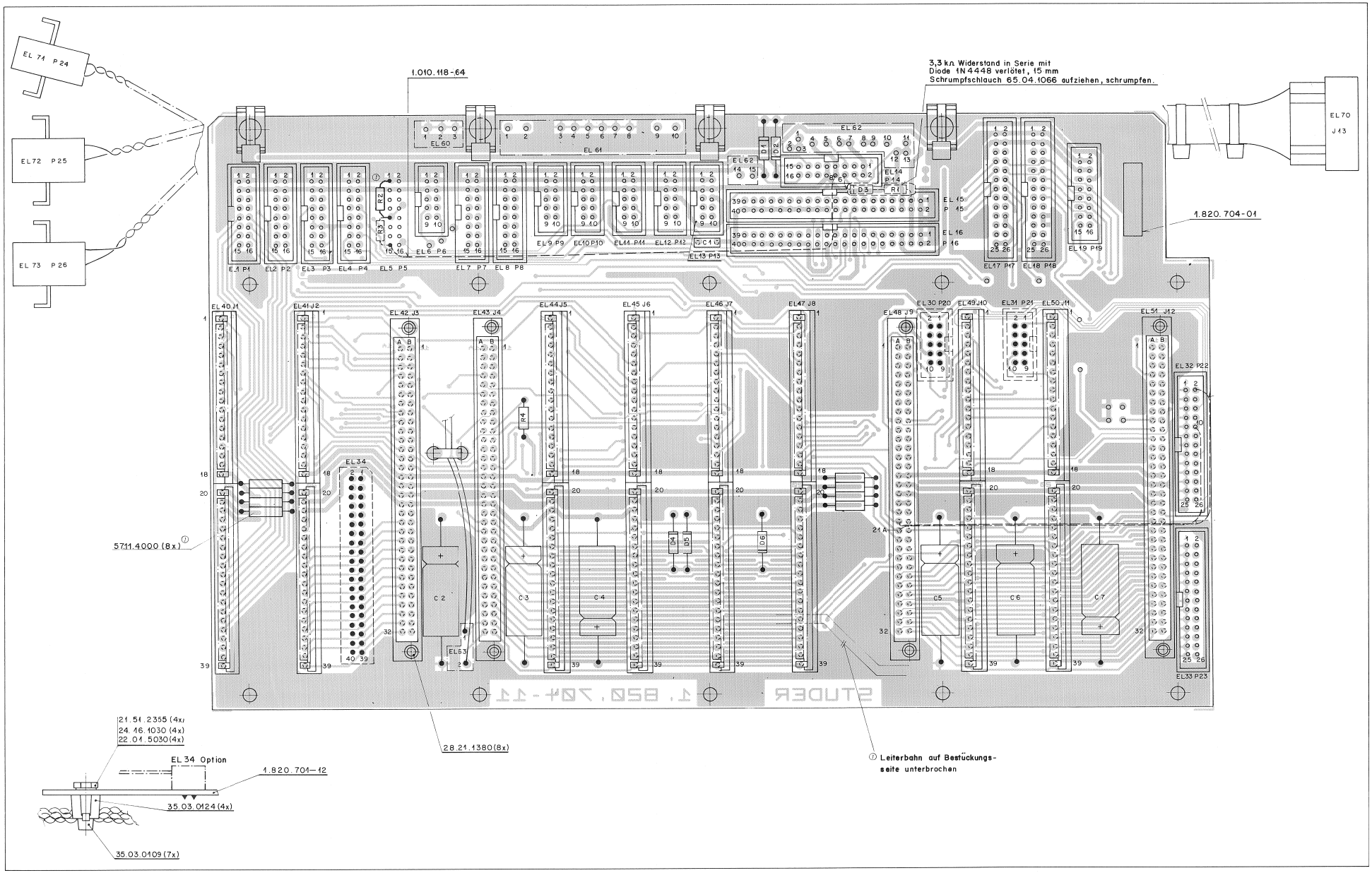

BASIS BOARD TAPE DECK 1.820.704.00

IND.	POS.NO.	PART NO.	VALUE	SPECIFICATIONS / EQUIVALENT	MANUF.
	C.....1	59.06.0683	68 nF	20%, PETP	
	C.....2	59.25.1102	1000 uF	-10%, 6.3/, El	
	C.....3	59.25.3471	470 uF	-10%, 16/, El	
	C.....4	59.25.3471	470 uF	-10%, 16/, El	
	C.....5	59.25.1102	1000 uF	-10%, 6.3/, El	
	C.....6	59.25.3471	470 uF	-10%, 16/, El	
	C.....7	59.25.3471	470 uF	-10%, 16/, El	
	D.....1	50.04.0122	1N 4001	...1N 4004	ITT,Mot
	D.....2	50.04.0122	1N 4001	...1N 4004	ITT,Mot
	D.....3	50.04.0125	1N 4448		Fc,ITT,Ph,Sae,It
	D.....4	50.04.0122	1N 4001	...1N 4004	ITT,Mot
	D.....5	50.04.1503	7.5 V Z	BZX 85 C 7V5	Sae
	D.....6	50.04.0122	1N 4001	...1N 4004	ITT,Mot
	J.....1			18 + 20 contacts, see note 1	
	J.....2			18 + 20 contacts, see note 1	
	J.....3			2 * 32 contacts, see note 2	
	J.....4			2 * 32 contacts, see note 2	
	J.....5			18 + 20 contacts, see note 1	
	J.....6			18 + 20 contacts, see note 1	
	J.....7			18 + 20 contacts, see note 1	
	J.....8			18 + 20 contacts, see note 1	
	J.....9			2 * 32 contacts, see note 2	
	J.....10			18 + 20 contacts, see note 1	
	J.....11			18 + 20 contacts, see note 1	
	J.....12			2 * 32 contacts, see note 2	
	J.....13			24 contacts, see note 3	
	P.....1			16 contacts, see note 4	
	P.....2			16 contacts, see note 4	
	P.....3			16 contacts, see note 4	
	P.....4			16 contacts, see note 4	
	P.....5			16 contacts, see note 4	
	P.....6			10 contacts, see note 5	
	P.....7			16 contacts, see note 4	
	P.....8			16 contacts, see note 4	

IND.	POS.NO.	PART NO.	VALUE	SPECIFICATIONS / EQUIVALENT	MANUF.
	P.....9			10 contacts, see note 5	
	P....10			10 contacts, see note 5	
	P....11			10 contacts, see note 5	
	P....12			10 contacts, see note 5	
	P....13			10 contacts, see note 5	
	P....14			16 contacts, see note 4	
	P....15			40 contacts, see note 6	
	P....16			40 contacts, see note 6	
	P....17			26 contacts, see note 7	
	P....18			26 contacts, see note 7	
	P....19			16 contacts, see note 4	
	P....20			10 contacts, see note 5	
	P....21			10 contacts, see note 5	
	P....22			26 contacts, see note 7	
	P....23			26 contacts, see note 7	
	P....24			40 contacts, see note 6	
	P....25			6 contacts, see note 8	
	P....26			3 contacts, see note 9	
	P....27			3 contacts, see note 9	
	R.....1	57.11.4332	3.3 kOhm		
	R.....2	57.11.4182	1.8 kOhm		
	R.....3	57.11.4273	27 kOhm		
	R.....4	57.11.4332	3.3 kOhm		

IND.	POS.NO.	PART NO.	VALUE	SPECIFICATIONS / EQUIVALENT	MANUF.
Note 1 - 2 connectors:					
	18 contacts,	Studer Nr.	54.10.2015		
		Burndy Nr.	GCS8 18 SD 19 V1 K9		
	20 contacts,	Studer Nr.	54.10.2026		
		Burndy Nr.	GCS8 20 SO V1 K9		
Note 2 - connector, 2 * 32 contacts:		Studer Nr.	54.11.2005		
		Burndy Nr.	FI 64 B 20 B00 A00 ZO		
		Philips Nr.	2422 025 89297		
		Erni Nr.	9722.543.616		
Note 3 - connector:					
	case, 24 circuits,	Studer Nr.	54.02.0415		
		Molex Nr.	03-06-2242		
	19 contacts,	Studer Nr.	54.02.0413		
		Molex Nr.	02-06-1101		
	5 contacts,	Studer Nr.	54.02.0412		
		Molex Nr.	02-06-1131		
Note 4 - connector, 16 contacts:		Studer Nr.	54.14.2002		
		Yamaichi Nr.	FAP-16-08//4		
		Burndy Nr.	BPH 9 B 16 B00 GS		
Note 5 - connector, 10 contacts:		Studer Nr.	54.14.2001		
		Yamaichi Nr.	FAP-10-08//4		
		Burndy Nr.	BPH 7 B 10 B00 GS		
Note 6 - connector, 40 contacts:		Studer Nr.	54.14.2004		
		Yamaichi Nr.	FAP-40-08//4		
		Burndy Nr.	BPH 9 B 40 B00 GS		
Note 7 - connector, 26 contacts:		Studer Nr.	54.14.2003		

ISD.	POS.NO.	PART NO.	VALUE	SPECIFICATIONS / EQUIVALENT	MANUF.
		Yamaichi Nr.	FAP-26-08//4		
		Burndy Nr.	BPH 9 B 26 B00 GS		
Note 8 - connector:					
	case, 6 circuits,	Studer Nr.	54.02.0417		
		Molex Nr.	03-06-1061		
	2 contacts,	Studer Nr.	54.02.0413		
		Molex Nr.	02-06-1101		
Note 9 - connector:					
	case, 3 circuits,	Studer Nr.	54.02.0401		
		Molex Nr.	03-06-1031		
	2 contacts,	Studer Nr.	54.02.0412		
		Molex Nr.	02-06-1131		

El=Electrolytic, PETP=Polyesterfiln

MANUFACTURER: ITT=ITT Intermetall, Mot=Motorola.

ORIG 86/10/09

BASIS BOARD TAPE DECK 1.820.704.81

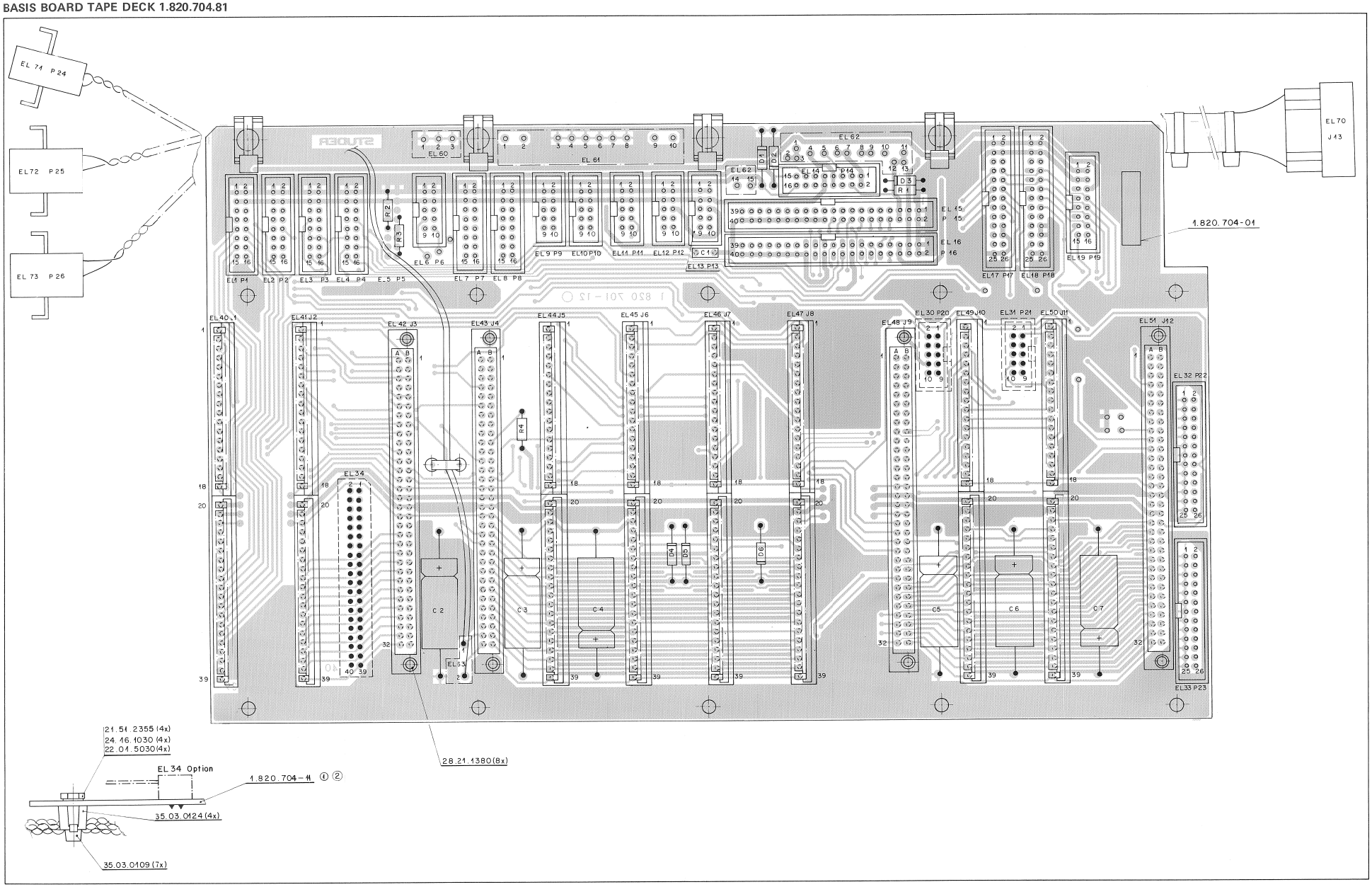

BASIS BOARD TAPE DECK 1.820.704.81

IND.	POS.NO.	PART NO.	VALUE	SPECIFICATIONS / EQUIVALENT	MANUF.
	C....1	59.06.0683	68 nF	20%, PETP	
	C....2	59.25.1102	1000 uF	-10%, 6.3V, El	
	C....3	59.25.3471	470 uF	-10%, 16V, El	
	C....4	59.25.3471	470 uF	-10%, 16V, El	
	C....5	59.25.1102	1000 uF	-10%, 6.3V, El	
	C....6	59.25.3471	470 uF	-10%, 16V, El	
	C....7	59.25.3471	470 uF	-10%, 16V, El	
	D....1	50.04.0122	1N 4001	...1N 4004	ITT,Mot
	D....2	50.04.0122	1N 4001	...1N 4004	ITT,Mot
	D....3	50.04.0125	1N 4448		Fe,ITT,Ph,Sea,IE
	D....4	50.04.0122	1N 4001	...1N 4004	ITT,Mot
	D....5	50.04.1503	7.5 V Z	BZX 85 C 7V5	Sea
	D....6	50.04.0122	1N 4001	...1N 4004	ITT,Mot
	J....1			18 + 20 contacts, see note 1	
	J....2			18 + 20 contacts, see note 1	
	J....3			2 * 32 contacts, see note 2	
	J....4			2 * 32 contacts, see note 2	
	J....5			18 + 20 contacts, see note 1	
	J....6			18 + 20 contacts, see note 1	
	J....7			18 + 20 contacts, see note 1	
	J....8			18 + 20 contacts, see note 1	
	J....9			2 * 32 contacts, see note 2	
	J....10			18 + 20 contacts, see note 1	
	J....11			18 + 20 contacts, see note 1	
	J....12			2 * 32 contacts, see note 2	
	J....13			24 contacts, see note 3	
	P....1			16 contacts, see note 4	
	P....2			16 contacts, see note 4	
	P....3			16 contacts, see note 4	
	P....4			16 contacts, see note 4	
	P....5		not used		
	P....6			10 contacts, see note 5	
	P....7			16 contacts, see note 4	
	P....8			16 contacts, see note 4	

IND.	POS.NO.	PART NO.	VALUE	SPECIFICATIONS / EQUIVALENT	MANUF.
	P....9			10 contacts, see note 5	
	P....10			10 contacts, see note 5	
	P....11			10 contacts, see note 5	
	P....12			10 contacts, see note 5	
	P....13			10 contacts, see note 5	
	P....14			16 contacts, see note 4	
	P....15			40 contacts, see note 6	
	P....16			40 contacts, see note 6	
	P....17			26 contacts, see note 7	
	P....18			26 contacts, see note 7	
	P....19			16 contacts, see note 4	
	P....20			10 contacts, see note 5	
	P....21			10 contacts, see note 5	
	P....22			26 contacts, see note 7	
	P....23			26 contacts, see note 7	
	P....24			6 contacts, see note 8	
	P....25			3 contacts, see note 9	
	P....26			3 contacts, see note 9	
	R.....1	57.11.4332	3.3 kOhm		
	R.....2	57.11.4182	1.8 kOhm		
	R.....3	57.11.4273	27 kOhm		
	R.....4	57.11.4332	3.3 kOhm		
(00)	R.....5	57.11.4000	0 Ohm		
(01)	R.....5		not used		
(00)	R.....6	57.11.4000	0 Ohm		
(01)	R.....6		not used		
(00)	R.....7	57.11.4000	0 Ohm		
(01)	R.....7		not used		
(00)	R.....8	57.11.4000	0 Ohm		
(01)	R.....8		not used		
(00)	R.....9	57.11.4000	0 Ohm		
(01)	R.....9		not used		
(00)	R....10	57.11.4000	0 Ohm		
(01)	R....10		not used		
(00)	R....11	57.11.4000	0 Ohm		
(01)	R....11		not used		

IND.	POS.NO.	PART NO.	VALUE	SPECIFICATIONS / EQUIVALENT	MANUF.
(00)	R....12	57.11.4000	0 Ohm		
(01)	R....12		not used		

IND.	POS.NO.	PART NO.	VALUE	SPECIFICATIONS / EQUIVALENT	MANUF.
	Note 1 - 2 connectors:				
	18 contacts,			Studer Nr.	54.10.2015
				Burndy Nr.	HCSH 18 SO 19 V1 K9
	20 contacts,			Studer Nr.	54.10.2026
				Burndy Nr.	HCSH 20 SO V1 K9
	Note 2 - connector, 2 * 32 contacts:				
				Studer Nr.	54.11.2005
				Burndy Nr.	FI 64 B 20 B00 A00 Z0
				Philips Nr.	2422 025 89297
				Eeni Nr.	9722.543.616
	Note 3 - connector:				
	case, 24 circuits,			Studer Nr.	54.02.0415
				Molex Nr.	03-06-2242
	19 contacts,			Studer Nr.	54.02.0413
				Molex Nr.	02-06-1101
	5 contacts,			Studer Nr.	54.02.0412
				Molex Nr.	02-06-1131
	Note 4 - connector, 16 contacts:				
				Studer Nr.	54.14.2002
				Yamaichi Nr.	FAF-16-08//4
				Burndy Nr.	BPH 9 B 16 B00 GS
	Note 5 - connector, 10 contacts:				
				Studer Nr.	54.14.2001
				Yamaichi Nr.	FAF-10-08//4
				Burndy Nr.	BPH 7 B 10 B00 GS
	Note 6 - connector, 40 contacts:				
				Studer Nr.	54.14.2004
				Yamaichi Nr.	FAF-40-08//4
				Burndy Nr.	BPH 9 B 40 B00 GS
	Note 7 - connector, 26 contacts:				

IND.	POS.NO.	PART NO.	VALUE	SPECIFICATIONS / EQUIVALENT	MANUF.
				Studer Nr.	54.14.2003
				Yamaichi Nr.	FAF-26-08//4
				Burndy Nr.	BPH 9 B 26 B00 GS
	Note 8 - connector:				
	case, 6 circuits,			Studer Nr.	54.02.0417
				Molex Nr.	03-06-1061
	2 contacts,			Studer Nr.	54.02.0413
				Molex Nr.	02-06-1101
	Note 9 - connector:				
	case, 3 circuits,			Studer Nr.	54.02.0401
				Molex Nr.	03-06-1031
	2 contacts,			Studer Nr.	54.02.0412
				Molex Nr.	02-06-1131

El=Electrolytic, PETP=Polyesterfilm

MANUFACTURER: ITT=ITT Internetall, Mot=Motorola.

ORIG 87/09/08 (01) 89/01/13

BLOCK DIAGRAM
MP UNIT TAPE DECK CONTROL 1.820.781

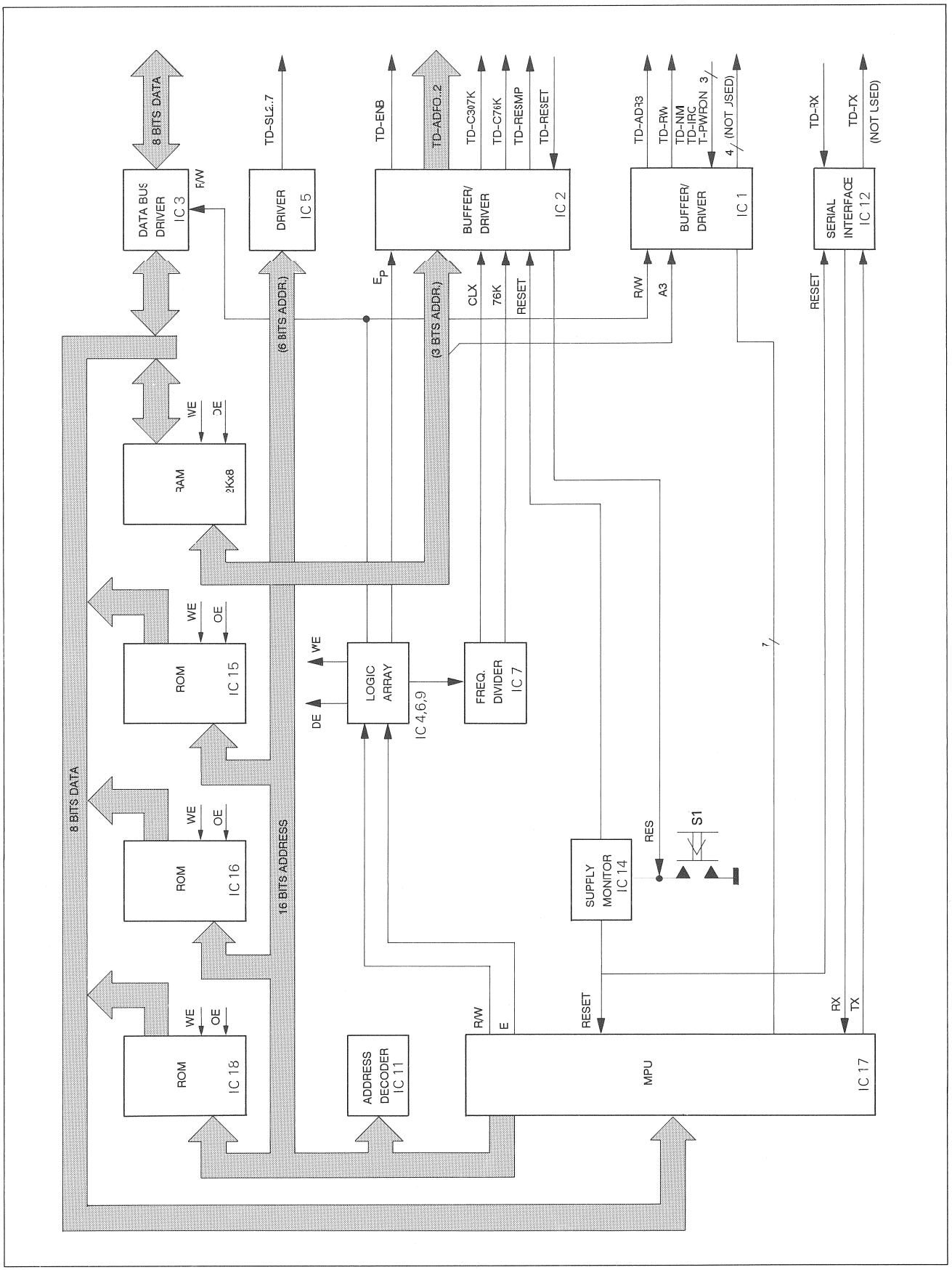

MP UNIT TAPE DECK CONTROL 1.820.781.20

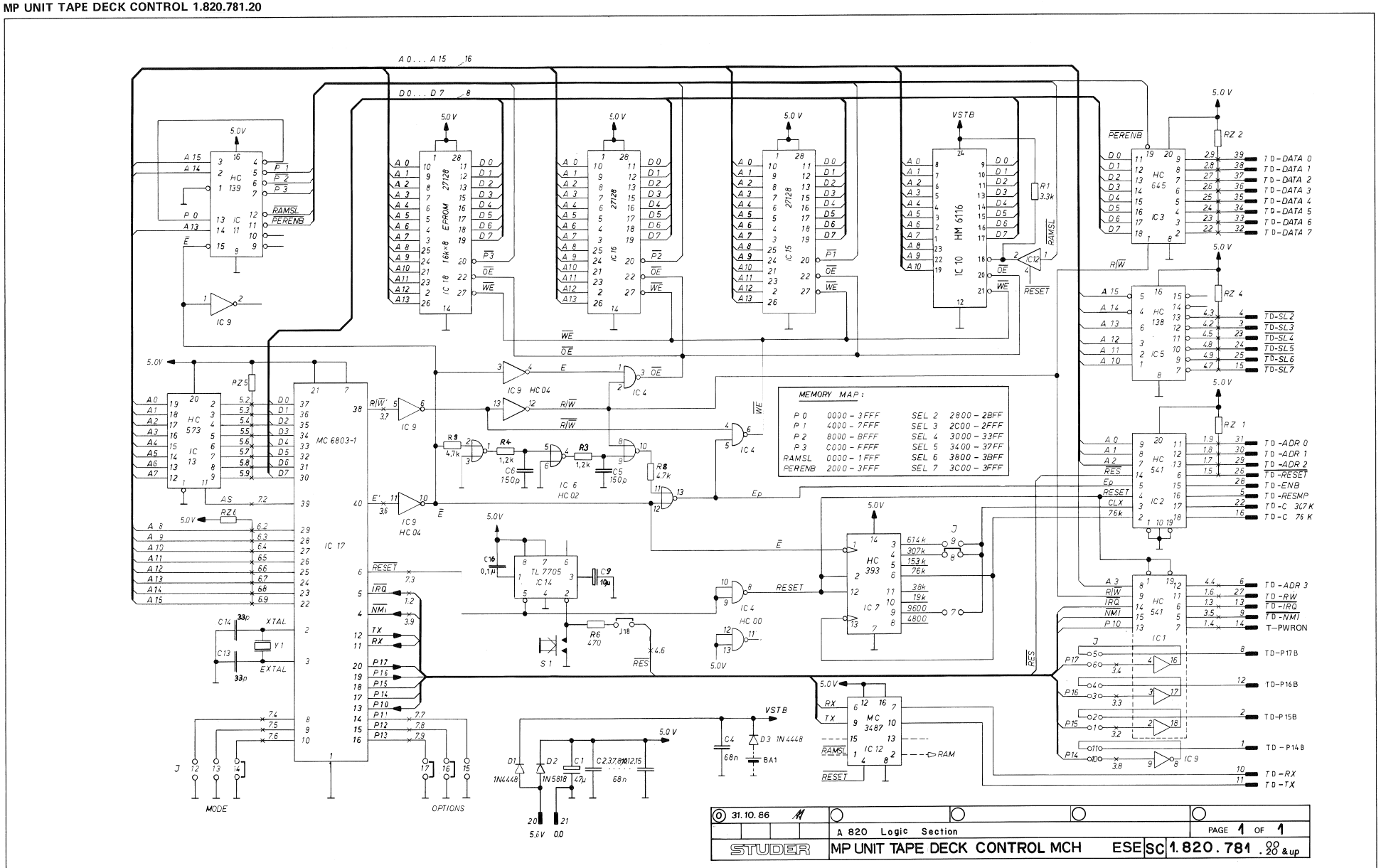

31.10.86			
	A 820 Logic Section		PAGE 1 OF 1
STUDER	MP UNIT TAPE DECK CONTROL MCH	ESE SC	1.820.781.00/20 &up

MP UNIT TAPE DECK CONTROL 1.820.781.20

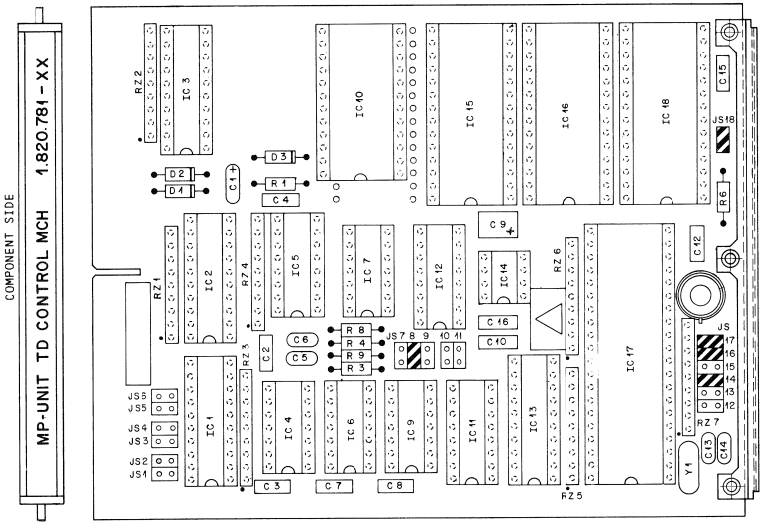

IND.	POS.NO.	PART NO.	VALUE	SPECIFICATIONS / EQUIVALENT	MANUF.
	C.....1	59.26.0470	47 uF	20%, 6.3V , Sal	Ph
	C.....2	59.06.0683	68 nF	10%, 63V , PETP	
	C.....3	59.06.0683	68 nF	10%, 63V , PETP	
	C.....4	59.06.0683	68 nF	10%, 63V , PETP	
	C.....5	59.34.7151	150 pF	2%, Ce	
	C.....6	59.34.7151	150 pF	2%, Ce	
	C.....7	59.06.0683	68 nF	10%, 63V , PETP	
	C.....8	59.06.0683	68 nF	10%, 63V , PETP	
	C.....9	59.26.2100	10 uF	20%, 16V , Sal	
	C.....10	59.06.0683	68 nF	10%, 63V , PETP	
	C.....11		not used		
	C.....12	59.06.0683	68 nF	10%, 63V , PETP	
	C.....13	59.34.2330	33 pF	5%, Ce	
	C.....14	59.34.2330	33 pF	5%, Ce	
	C.....15	59.06.0683	68 nF	10%, 63V , PETP	
	C.....16	59.06.0104	100 nF	10%, 63V , PETP	
	D.....1	50.04.0125	1N 4448		Fc,ITT,Ph,Ses,Tf
	D.....2	50.04.0512	1N 5818	1N 5819	Mot
	D.....3	50.04.0125	1N 4448		Fc,ITT,Ph,Ses,Tf
	IC.....1	50.17.1541	74 HC 541		Mot,NS,Ph,RCA,SGS,TI,To
	IC.....2	50.17.1541	74 HC 541		Mot,NS,Ph,RCA,SGS,TI,To
	IC.....3	50.17.1645	74 HC 645		Mot,NS,Ph,RCA,SGS,TI,To
	IC.....4	50.17.1000	74 HC 00		Mot,NS,Ph,RCA,SGS,TI,To
	IC.....5	50.17.1138	74 HC 138		Mot,NS,Ph,RCA,SGS,TI,To
	IC.....6	50.17.1002	74 HC 02		Mot,NS,Ph,RCA,SGS,TI,To
	IC.....7	50.17.1393	74 HC 393		Mot,NS,Ph,RCA,SGS,TI,To
	IC.....8		not used		
	IC.....9	50.17.0004	74 HCT 04		Mot,NS,Ph,RCA,SGS,TI,To
	IC.....10	50.14.0107	HM6116LP-4	MSM 5128-15	Hi,OKI
	IC.....11	50.17.1139	74 HC 139		Mot,NS,Ph,RCA,SGS,TI,To
	IC.....12	50.15.0105	MC 3487 P	DS 3487 N	Mot,NS
	IC.....13	50.17.1573	74 HC 573		Mot,NS,Ph,RCA,SGS,TI,To
	IC.....14	50.11.0122	TL7705ACP		TI
	IC.....15		not used		
	IC.....16	50.14.0125	27128	HN 4827128G-30	Hi,It

IND.	POS.NO.	PART NO.	VALUE	SPECIFICATIONS / EQUIVALENT	MANUF.
	IC.....17	50.16.0107	MC6803P-1	6803P-L	Mot,Hi
	IC.....18	50.14.0125	27128	HN 4827128G-30	Hi,It
	JS.....1			see note 2	
	JS.....2			see note 2	
	JS.....3			see note 2	
	JS.....4			see note 2	
	JS.....5			see note 2	
	JS.....6			see note 2	
	JS.....7			see note 2	
	JS.....8			see note 2	
	JS.....9			see note 2	
	JS.....10			see note 2	
	JS.....11			see note 2	
	JS.....12			see note 2	
	JS.....13			see note 2	
	JS.....14			see note 2	
	JS.....15			see note 2	
	JS.....16			see note 2	
	JS.....17			see note 2	
	JS.....18			see note 2	
	R.....1	57.11.4332	3.3 kOhm	2%	
	R.....2		not used		
	R.....3	57.11.4122	1.2 kOhm	2%	
	R.....4	57.11.4122	1.2 kOhm	2%	
	R.....5		not used		
	R.....6	57.11.4471	470 Ohm	2%	
	R.....7		not used		
	R.....8	57.11.4472	4.7 kOhm	2%	
	R.....9	57.11.4472	4.7 kOhm	2%	
	RZ.....1	57.88.4332		see note 3	
	RZ.....2	57.88.4332		see note 3	
	RZ.....3	57.88.4332		see note 3	
	RZ.....4	57.88.4332		see note 3	
	RZ.....5	57.88.4332		see note 3	

IND.	POS.NO.	PART NO.	VALUE	SPECIFICATIONS / EQUIVALENT	MANUF.
	RZ.....6	57.88.4332		see note 3	
	RZ.....7	57.88.4332		see note 3	
	S.....1	55.03.0122		Chicago Switch 34-550-001	
	Y.....1	89.01.0560		4.9152 MHz, +-100 ppm	

Note 1 - IC15/16/18 : Software is delivered in a set only.

Note 2 - Contact pin:
Studer Nr. 54.01.0020
Berg Nr. 75 160-102-36
Philips Nr. 2422 025 89303
Bridge:
Studer Nr. 54.01.0021
Berg Nr. 65 474-001
Philips Nr. 2422 024 88003

Note 3 - Network:
8 * 3.3 kOhm, 5%
Sicovend Nr. C09 x 3.3 k J
Ineltro Nr. R88 3.3 K 5%

Ce=Ceramic, Sal=Solid Aluminium, PETP=Polyesterfilm.

MANUFACTURER: Fc=Fairchild, Hi=Hitachi, ITT=Intermetall, Mot=Motorola,
NS=National Semiconductors, OK=OKI, Ph=Philips,
Ses=Sescosem, Tf=Telefunken,TI=Texas Instruments.

ORIG 86/10/31

BLOCK DIAGRAM
TAPE DECK SERIAL INTERFACE 1.820.763

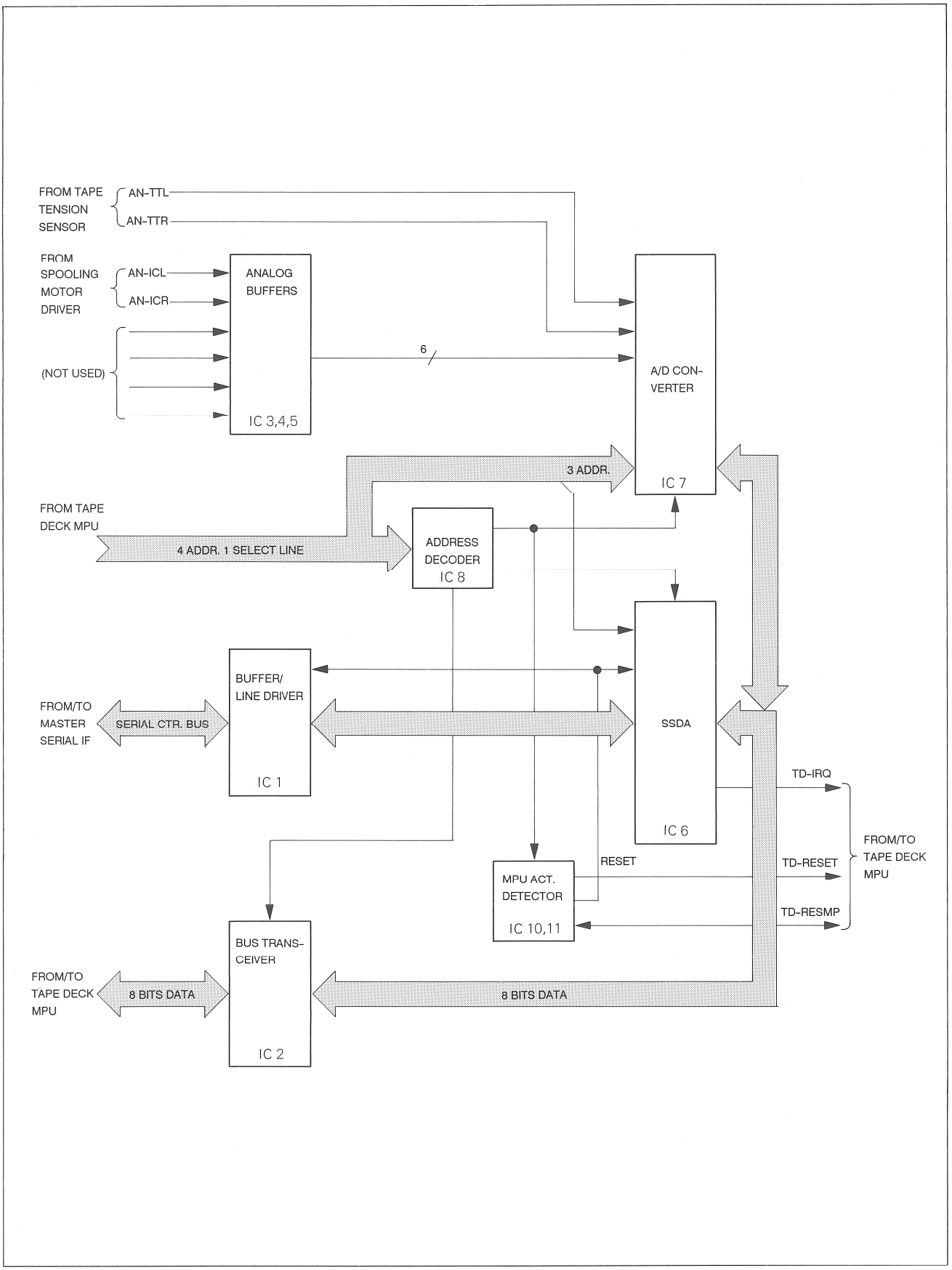

TAPE DECK SERIAL INTERFACE 1.820.763.82

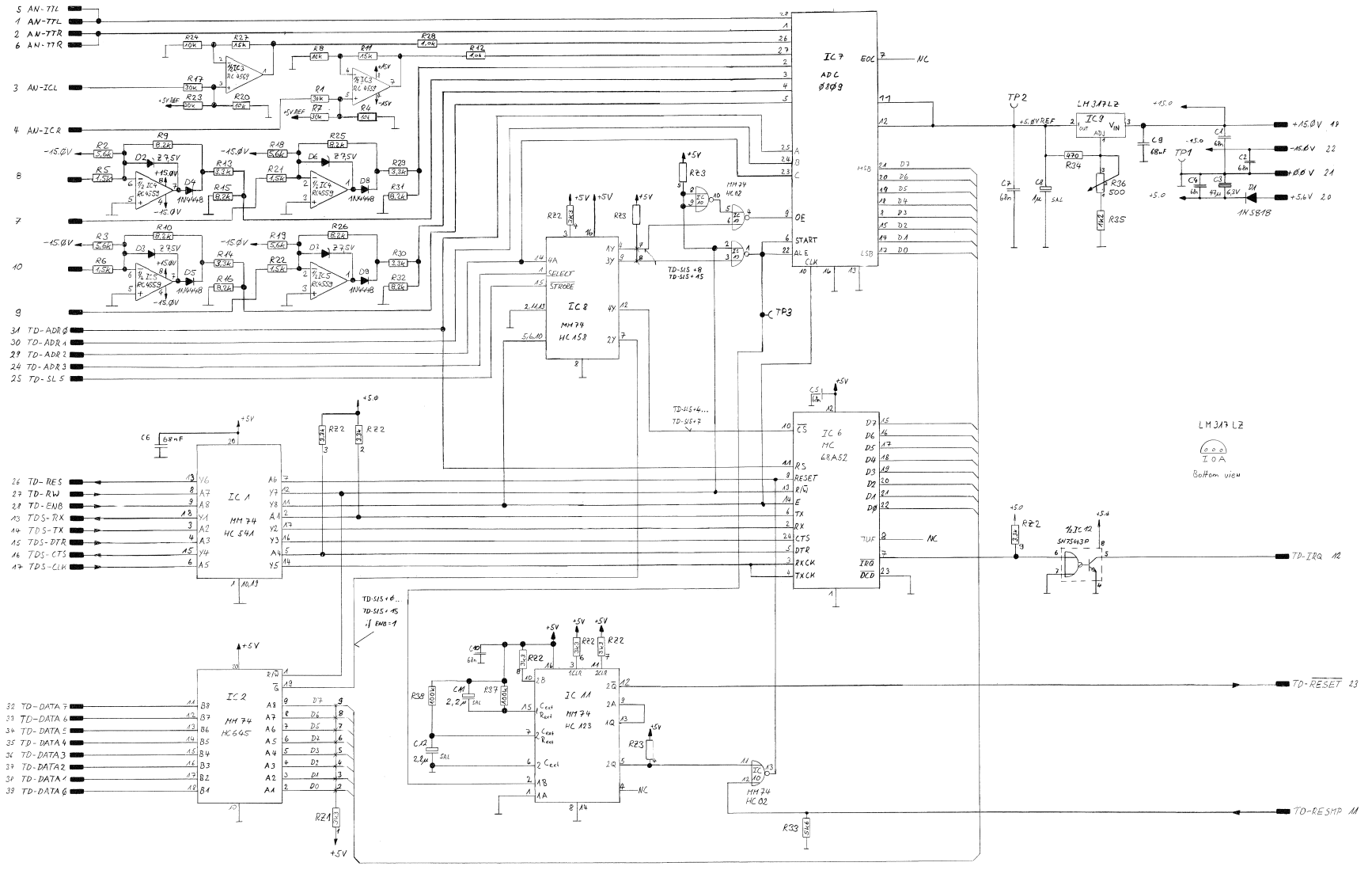

	30.11.87 IVA		A 820 Logic Section			
STUDER	Tape Deck Serial Interface	ESE	SC	1.820.763.82	PAGE 1	OF 1

TAPE DECK SERIAL INTERFACE 1.820.763.82

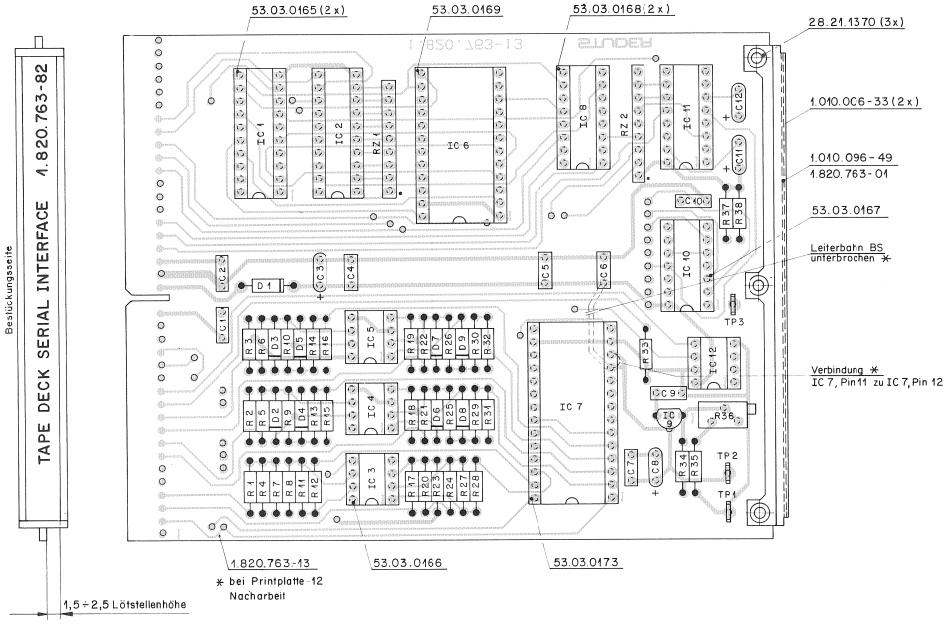

IND.	POS.NO.	PART NO.	VALUE	SPECIFICATIONS / EQUIVALENT	MANUF.
	C....1	59.06.0683	68 nF	20%	NS,Mot
	C....2	59.06.0683	68 nF	20%	NS,Mot
	C....3	59.42.0470	47 uF	20%	Ph
	C....4	59.06.0683	68 nF	20%	NS,Mot
	C....5	59.06.0683	68 nF	20%	NS,Mot
	C....6	59.06.0683	68 nF	20%	NS,Mot
	C....7	59.06.0683	68 nF	20%	NS,Mot
	C....8	59.26.9109	1.0 uF	20%	Ph
	C....9	59.06.0683	68 nF	20%	NS,Mot
	C....10	59.06.0683	68 nF	20%	NS,Mot
	C....11	59.26.5229	2.2 uF	20%	Ph
	C....12	59.26.5229	2.2 uF	20%	Ph
	D....1	50.04.0512	1N 5818	1N 5819	Mot
	D....2	50.04.1103	7.5 V	5%, .40W,Z-planar	ITT,See
	D....3	50.04.1103	7.5 V	5%, .40W,Z-planar	ITT,See
	D....4	50.04.0125	1N 4448	SI	Fe,ITT,Ph,See,Tf
	D....5	50.04.0125	1N 4448	SI	Fe,ITT,Ph,See,Tf
	D....6	50.04.1103	7.5 V	5%, .40W,Z-planar	ITT,See
	D....7	50.04.1103	7.5 V	5%, .40W,Z-planar	ITT,See
	D....8	50.04.0125	1N 4448	SI	Fe,ITT,Ph,See,Tf
	D....9	50.04.0125	1N 4448	SI	Fe,ITT,Ph,See,Tf
	IC....1	50.17.1541	74HC 541		Mot,NS,Ph,RCA,SGS,TI,To
	IC....2	50.17.1645	74HC 645		Mot,NS,Ph,RCA,SGS,TI,To
	IC....3	50.09.0107	RC4559 NB		NEC,Ra
	IC....4	50.09.0107	RC4559 NB		NEC,Ra
	IC....5	50.09.0107	RC4559 NB		NEC,Ra
	IC....6	50.16.0114	MC68A52P	HD68A52, S68A52	AMI,Hi,Mot
	IC....7	50.19.0101	ADC 0809	M 58990 P	NS
	IC....8	50.17.1158	74HC 158		Mot,Nat,Ph,RCA,SGS,TI,To
	IC....9	50.10.0108	LM317 LZ	V-Reg.	Mot,Nat
	IC....10	50.17.1002	74HC 02		Mot,Nat,Ph,RCA,SGS,TI,To
	IC....11	50.17.1123	74HC 123		Mot,NS,Ph,RCA,SGS,TI,To
	IC....12	50.05.0203	SN75463P	DS 3613 N	NS,TI
	R....1	57.11.3303	30 kOhm	2%	

IND.	POS.NO.	PART NO.	VALUE	SPECIFICATIONS / EQUIVALENT	MANUF.
	R....2	57.11.3562	5.6 kOhm	5%	
	R....3	57.11.3562	5.6 kOhm	5%	
	R....4	57.11.3103	10 kOhm	2%	
	R....5	57.11.3152	1.5 kOhm	5%	
	R....6	57.11.3152	1.5 kOhm	5%	
	R....7	57.11.3303	30 kOhm	2%	
	R....8	57.11.3103	10 kOhm	2%	
	R....9	57.11.3822	8.2 kOhm	5%	
	R....10	57.11.3822	8.2 kOhm	5%	
	R....11	57.11.3153	15 kOhm	2%	
	R....12	57.11.3102	1.0 kOhm	5%	
	R....13	57.11.3332	3.3 kOhm	5%	
	R....14	57.11.3332	3.3 kOhm	5%	
	R....15	57.11.3822	8.2 kOhm	5%	
	R....16	57.11.3822	8.2 kOhm	5%	
	R....17	57.11.3303	30 kOhm	2%	
	R....18	57.11.3562	5.6 kOhm	5%	
	R....19	57.11.3562	5.6 kOhm	5%	
	R....20	57.11.3103	10 kOhm	2%	
	R....21	57.11.3152	1.5 kOhm	5%	
	R....22	57.11.3152	1.5 kOhm	5%	
	R....23	57.11.3303	30 kOhm	2%	
	R....24	57.11.3103	10 kOhm	2%	
	R....25	57.11.3822	8.2 kOhm	5%	
	R....26	57.11.3822	8.2 kOhm	5%	
	R....27	57.11.3153	15 kOhm	2%	
	R....28	57.11.3102	1.0 kOhm	5%	
	R....29	57.11.3332	3.3 kOhm	5%	
	R....30	57.11.3332	3.3 kOhm	5%	
	R....31	57.11.3822	8.2 kOhm	5%	
	R....32	57.11.3822	8.2 kOhm	5%	
	R....33	57.11.3562	5.6 kOhm	5%	
	R....34	57.11.3471	470 Ohm	2%	
	R....35	57.11.3122	1.2 kOhm	2%	
	R....36	58.05.0501	500 Ohm	Potentiometer	see note 1
	R....37	57.11.3104	100 kOhm	5%	
	R....38	57.11.3104	100 kOhm	5%	

IND.	POS.NO.	PART NO.	VALUE	SPECIFICATIONS / EQUIVALENT	MANUF.
	RZ....1	57.88.4332	8x3.3kOhm	10%	
	RZ....2	57.88.4332	8x3.3kOhm	10%	
	RZ....3			not used	
	TP....1	54.02.0320	2.8x 0.8	soldering test pin	
	TP....2	54.02.0320	2.8x 0.8	soldering test pin	
	TP....3	54.02.0320	2.8x 0.8	soldering test pin	

Note 1 - Potentiometer : 500 Ohm, 10%, .5W, PMG

Bourns	3296 Z - 1 - 501
Spectrol	64 Z 501 T 000
Murata	POT 3105 Z - 1 - 501
Contelec	183 XZ 501

Manufacturer: AMI=American Microsystem Inc., Fe=Fairchild, Hi=Hitachi, Mot=Motorola, Nat=National (Matsushita), NEC=Nippon Electric Corp., NS=National Semiconductors, Ph=Philips (incl. Valvo), Ra=Raytheon, RCA=Radio Corporation of America, See=Sescosem, SGS=SGS/Ates, TI=Texas Instrument, To=Toshiba.

ORIG 87/11/30

TAPE DECK SERIAL INTERFACE 1.820.763.83

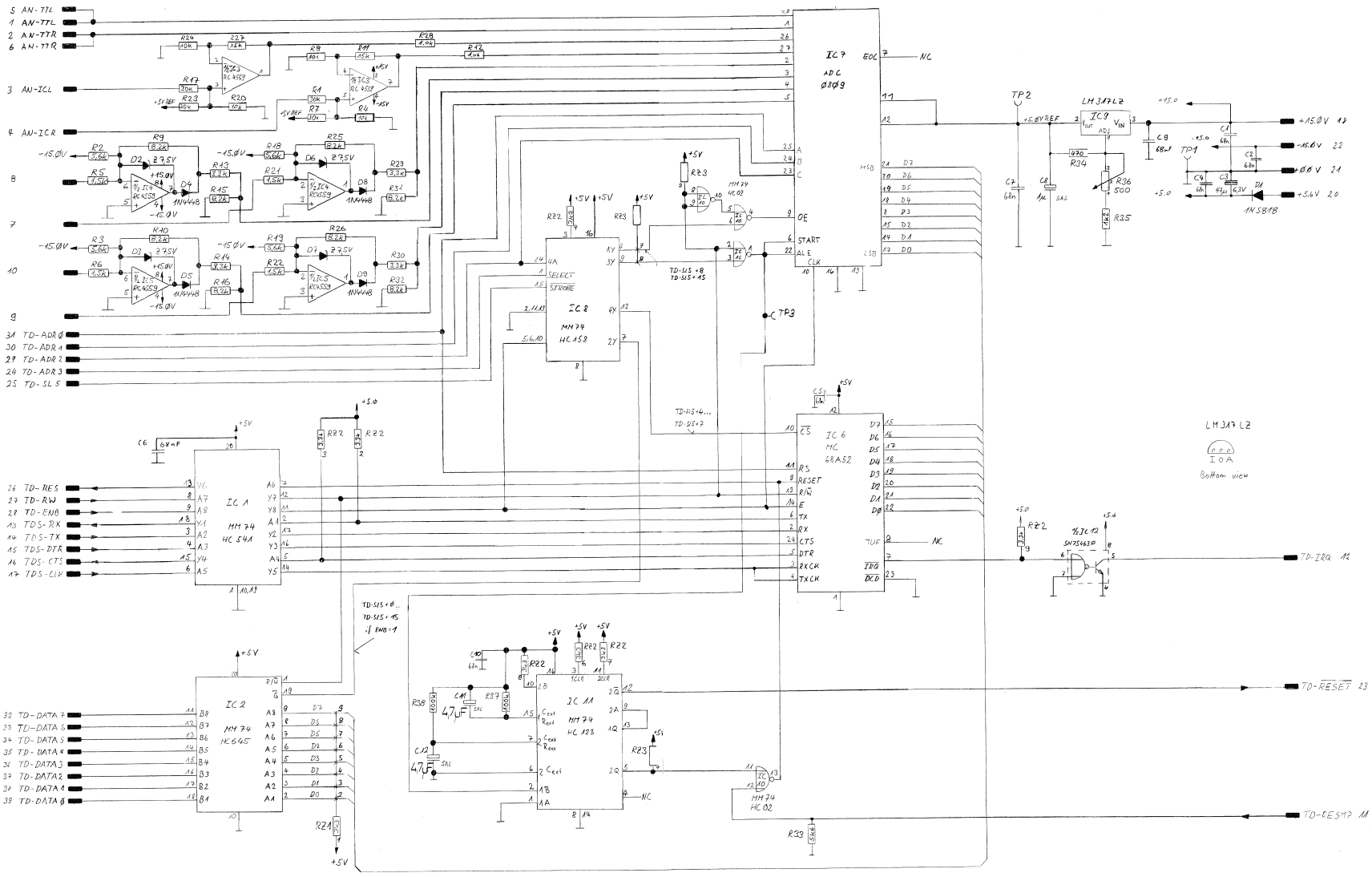

30.11.87 IVA	19.09.89 HAESSIG	A 820 Logic Section			
STUDER	Tape Deck Serial Interface	ESE	SC	1.820.763.83	PAGE 1 OF 1

TAPE DECK SERIAL INTERFACE 1.820.763.83

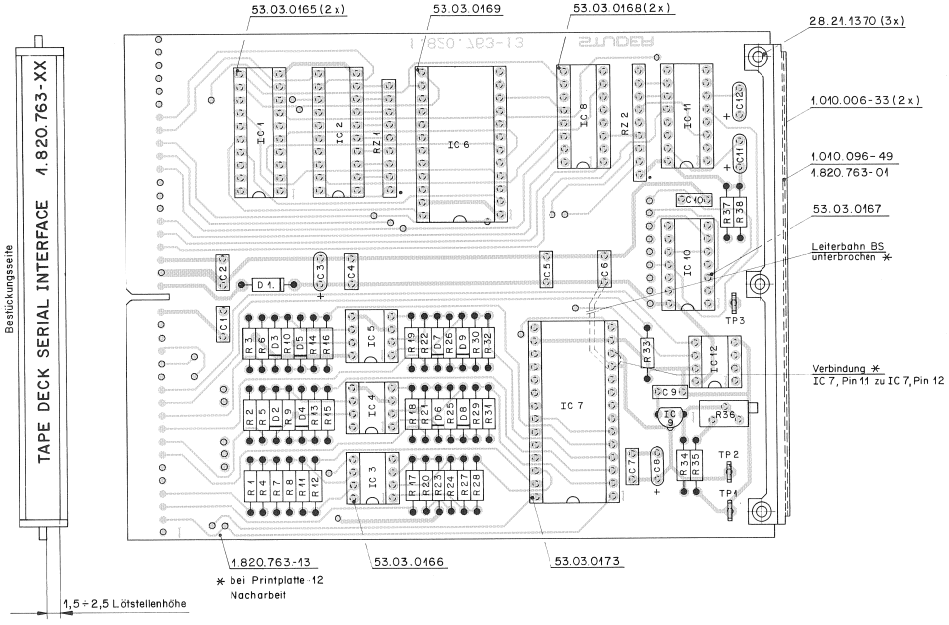

IND.	POS.NO.	PART NO.	VALUE	SPECIFICATIONS / EQUIVALENT	MANUF.
	C.....1	59.06.0683	68 nF	20%	NS,Mot
	C.....2	59.06.0683	68 nF	20%	NS,Mot
	C.....3	59.42.0470	47 uF	20%	Ph
	C.....4	59.06.0683	68 nF	20%	NS,Mot
	C.....5	59.06.0683	68 nF	20%	NS,Mot
	C.....6	59.06.0683	68 nF	20%	NS,Mot
	C.....7	59.06.0683	68 nF	20%	NS,Mot
	C.....8	59.26.9109	1.0 uF	20%	Ph
	C.....9	59.06.0683	68 nF	20%	NS,Mot
	C.....10	59.06.0683	68 nF	20%	NS,Mot
	C.....11	59.26.1479	4.7 uF	20%	Ph
	C.....12	59.26.1479	4.7 uF	20%	Ph
	D.....1	50.04.0512	1N 5818	1N 5819	Mot
	D.....2	50.04.1103	7.5 V	5%, .40W,Z-planar	ITT,Sem
	D.....3	50.04.1103	7.5 V	5%, .40W,Z-planar	ITT,Sem
	D.....4	50.04.0125	1N 4448	SI	Fc,ITT,Ph,Sem,Tf
	D.....5	50.04.0125	1N 4448	SI	Fc,ITT,Ph,Sem,Tf
	D.....6	50.04.1103	7.5 V	5%, .40W,Z-planar	ITT,Sem
	D.....7	50.04.1103	7.5 V	5%, .40W,Z-planar	ITT,Sem
	D.....8	50.04.0125	1N 4448	SI	Fc,ITT,Ph,Sem,Tf
	D.....9	50.04.0125	1N 4448	SI	Fc,ITT,Ph,Sem,Tf
	IC....1	50.17.1541	74HC 541		Mot,NS,Ph,RCA,SGS,TI,To
	IC....2	50.17.1645	74HC 645		Mot,NS,Ph,RCA,SGS,TI,To
	IC....3	50.09.0107	RC4559 NB		NEC,Ra
	IC....4	50.09.0107	RC4559 NB		NEC,Ra
	IC....5	50.09.0107	RC4559 NB		NEC,Ra
	IC....6	50.16.0114	MC68A52P	HD68A52, S68A52	AMI,Hi,Mot
	IC....7	50.19.0101	ADC 0809	M 58990 P	NS
	IC....8	50.17.1158	74HC 158		Mot,Nat,Ph,RCA,SGS,TI,To
	IC....9	50.10.0108	LM317 LZ	V-Reg.	Mot,Nat
	IC....10	50.17.1002	74HC 02		Mot,Nat,Ph,RCA,SGS,TI,To
	IC....11	50.17.1123	74HC 123		Ph,RCA,SGS,To
	IC....12	50.05.0203	SN75463P	DS 3613 N	NS,TI
	R.....1	57.11.3303	30 kOhm	2%	

IND.	POS.NO.	PART NO.	VALUE	SPECIFICATIONS / EQUIVALENT	MANUF.
	R.....2	57.11.3562	5.6 kOhm	5%	
	R.....3	57.11.3562	5.6 kOhm	5%	
	R.....4	57.11.3103	10 kOhm	2%	
	R.....5	57.11.3152	1.5 kOhm	5%	
	R.....6	57.11.3152	1.5 kOhm	5%	
	R.....7	57.11.3303	30 kOhm	2%	
	R.....8	57.11.3103	10 kOhm	2%	
	R.....9	57.11.3822	8.2 kOhm	5%	
	R.....10	57.11.3822	8.2 kOhm	5%	
	R.....11	57.11.3153	15 kOhm	2%	
	R.....12	57.11.3102	1.0 kOhm	5%	
	R.....13	57.11.3332	3.3 kOhm	5%	
	R.....14	57.11.3332	3.3 kOhm	5%	
	R.....15	57.11.3822	8.2 kOhm	5%	
	R.....16	57.11.3822	8.2 kOhm	5%	
	R.....17	57.11.3303	30 kOhm	2%	
	R.....18	57.11.3562	5.6 kOhm	5%	
	R.....19	57.11.3562	5.6 kOhm	5%	
	R.....20	57.11.3103	10 kOhm	2%	
	R.....21	57.11.3152	1.5 kOhm	5%	
	R.....22	57.11.3152	1.5 kOhm	5%	
	R.....23	57.11.3303	30 kOhm	2%	
	R.....24	57.11.3103	10 kOhm	2%	
	R.....25	57.11.3822	8.2 kOhm	5%	
	R.....26	57.11.3822	8.2 kOhm	5%	
	R.....27	57.11.3153	15 kOhm	2%	
	R.....28	57.11.3102	1.0 kOhm	5%	
	R.....29	57.11.3332	3.3 kOhm	5%	
	R.....30	57.11.3332	3.3 kOhm	5%	
	R.....31	57.11.3822	8.2 kOhm	5%	
	R.....32	57.11.3822	8.2 kOhm	5%	
	R.....33	57.11.3562	5.6 kOhm	5%	
	R.....34	57.11.3471	470 Ohm	2%	
	R.....35	57.11.3122	1.2 kOhm	2%	
	R.....36	58.05.0501	500 Ohm	Potentiometer	see note 1
	R.....37	57.11.3104	100 kOhm	5%	
	R.....38	57.11.3104	100 kOhm	5%	

IND.	POS.NO.	PART NO.	VALUE	SPECIFICATIONS / EQUIVALENT	MANUF.
	RZ....1	57.88.4332	8*3.3kOhm	10%	
	RZ....2	57.88.4332	8*3.3kOhm	10%	
	RZ....3		not used		
	TP....1	54.02.0320	2.8* 0.8	soldering test pin	
	TP....2	54.02.0320	2.8* 0.8	soldering test pin	
	TP....3	54.02.0320	2.8* 0.8	soldering test pin	

Note 1 - Potentiometer : 500 Ohm, 10%, .5W, PMG

Bourns	3296 Z - 1 - 501
Spectrol	64 Z 501 T 000
Murata	POT 3105 Z - 1 - 501
Comtelec	183 XZ 501

Manufacturer: AMI=American Microsystem Inc., Fc=Fairchild,
Hi=Hitachi, Mot=Motorola, Nat=National (Matsushita),
NEC=Nippon Electric Corp., NS=National Semiconductors,
Ph=Philips (incl. Valvo), Ra=Raytheon,
RCA=Radio Corporation of America, Sem=Semicosem,
SGS=SGS/Ates, TI=Texas Instrument, To=Toshiba.

ORIG 89/09/19

BLOCK DIAGRAM
TAPE DECK PERIPHERY CONTROL 1.820.762

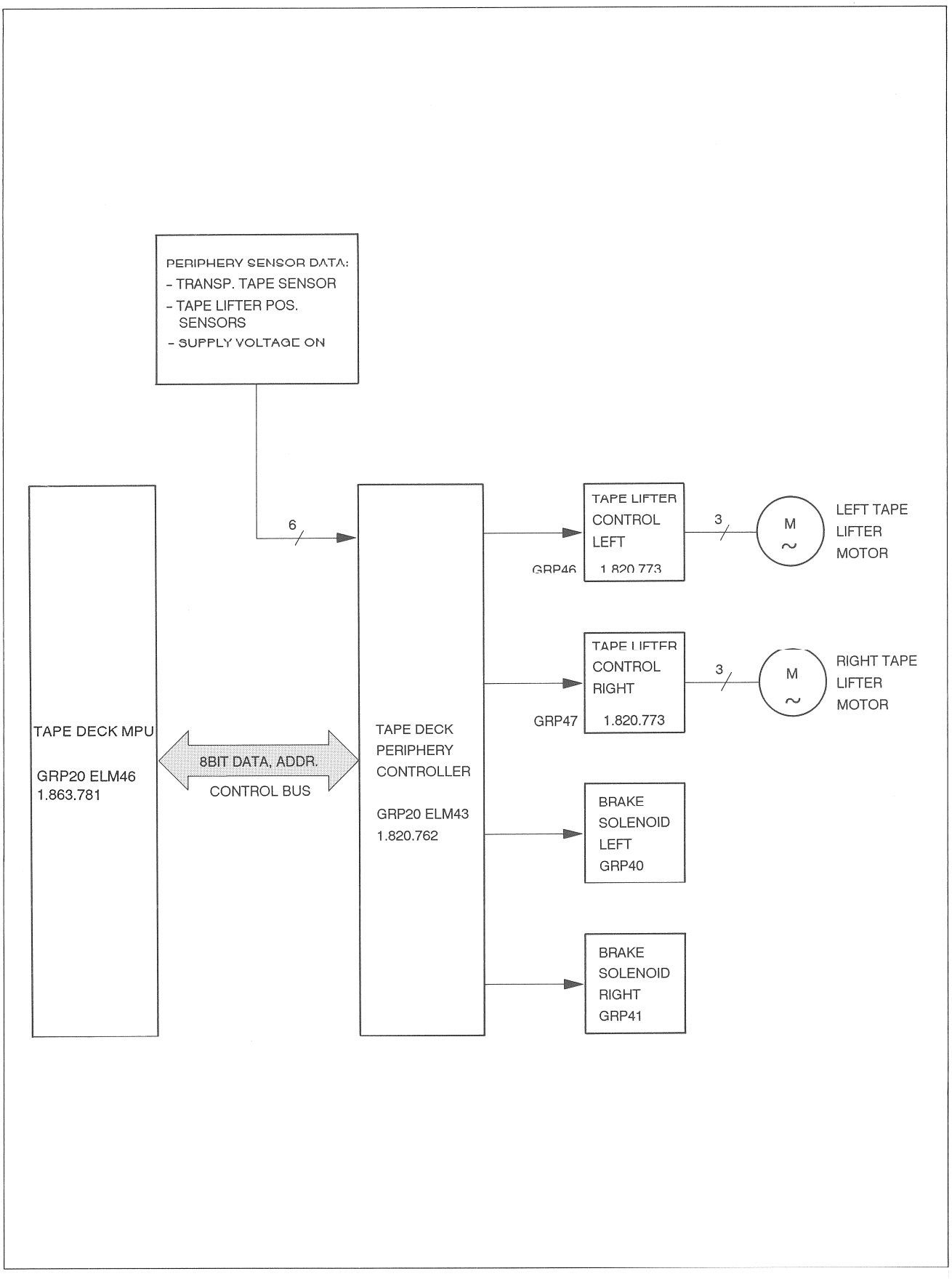

BLOCK DIAGRAM
TAPE DECK PERIPHERY CONTROL 1.820.762

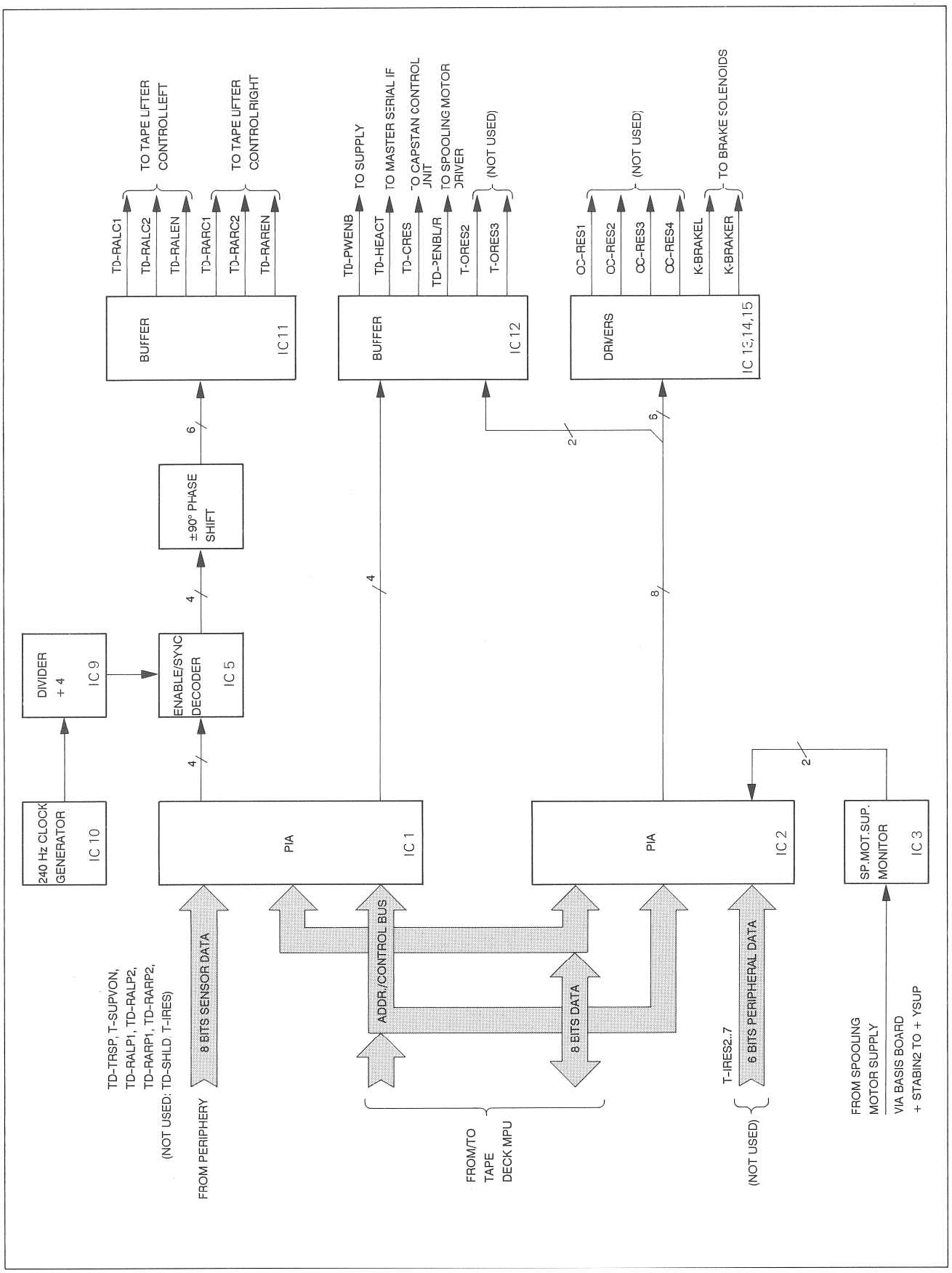

TAPE DECK PERIPHERY CONTROL 1.820.762.00

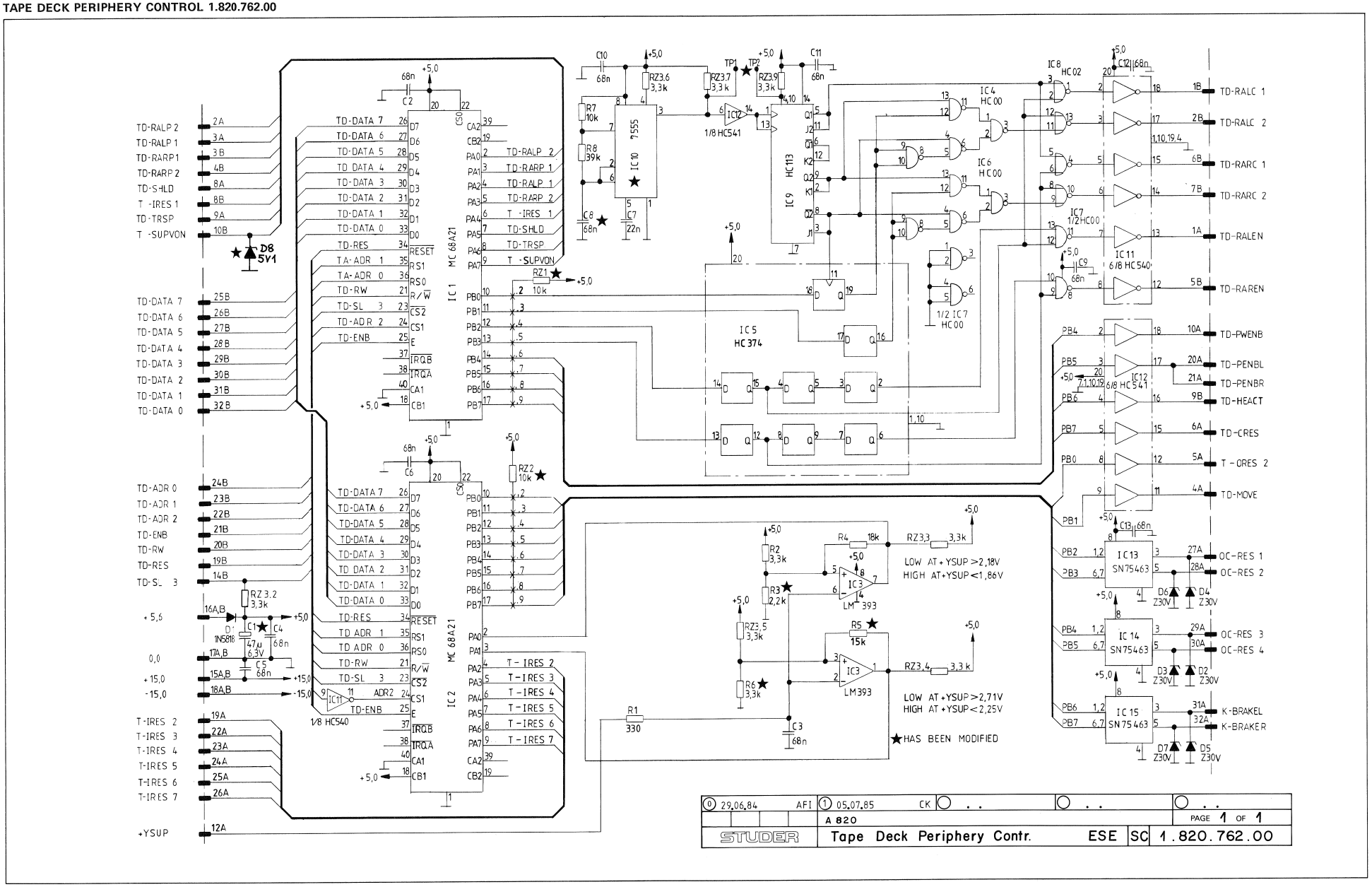

TAPE DECK PERIPHERY CONTROL 1.820.762.00

COMPONENT SIDE

TAPE DECK PERIPHERY CTR. 1.820.762-00

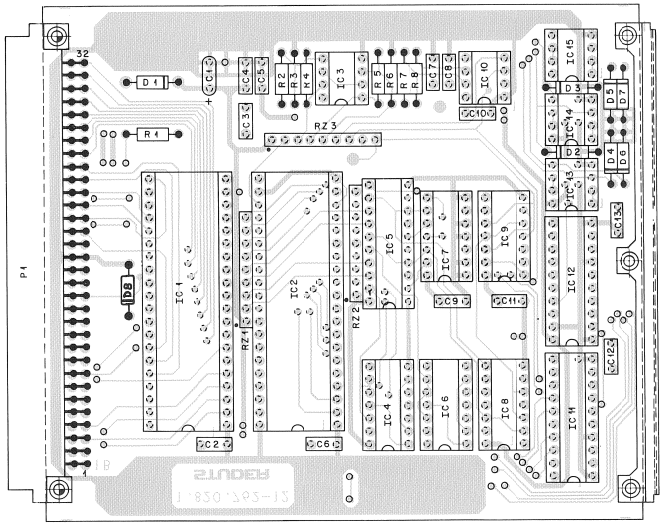

IND.	POS.NO.	PART NO.	VALUE	SPECIFICATIONS / EQUIVALENT	MANUF.
(00)	C.....1	59.41.5101	100 uF	20%, 6.3V	
(01)	C.....1	59.26.0470	47 uF	20%, 6.3V	
	C.....2	59.06.0683	68 nF	20%	
	C.....3	59.06.0683	68 nF	20%	
	C.....4	59.06.0683	68 nF	20%	
	C.....5	59.06.0683	68 nF	20%	
	C.....6	59.06.0683	68 nF	20%	
	C.....7	59.06.0223	22 nF	10%	
(00)	C.....8	59.06.0683	68 nF	20%	
(02)	C.....8	59.06.5683	68 nF	5%	
	C.....9	59.06.0683	68 nF	20%	
	C.....10	59.06.0683	68 nF	20%	
	C.....11	59.06.0683	68 nF	20%	
	C.....12	59.06.0683	68 nF	20%	
	C.....13	59.06.0683	68 nF	20%	
	D.....1	50.04.0512	1N 5818	1N 5819	Mot
	D.....2	50.04.1125	30 V Z	ZPD 30	ITT
	D.....3	50.04.1125	30 V Z	ZPD 30	ITT
	D.....4	50.04.1125	30 V Z	ZPD 30	ITT
	D.....5	50.04.1125	30 V Z	ZPD 30	ITT
	D.....6	50.04.1125	30 V Z	ZPD 30	ITT
	D.....7	50.04.1125	30 V Z	ZPD 30	ITT
(01)	D.....8	50.04.1112	5.1 V Z	BZX83C 5V1, BZX55C 5V1, ZPD 5.1	ITT,Sws
	IC....1	50.16.0106	MC68 A 21P	S68 A 21P	AMI,Fc,Mot
	IC....2	50.16.0106	MC68 A 21P	S68 A 21P	AMI,Fc,Mot
	IC....3	50.05.0203	LM 393 N	LM 393 P	NS,TI
	IC....4	50.17.1000	74 HC 00	.. 74 HC 00 .	Mot,NS,TI
	IC....5	50.17.1374	74 HC 374	.. 74 HC 374 .	Mot,NS,TI
	IC....6	50.17.1000	74 HC 00	.. 74 HC 00 .	Mot,NS,TI
	IC....7	50.17.1000	74 HC 00	.. 74 HC 00 .	Mot,NS,TI
	IC....8	50.17.1002	74 HC 02	.. 74 HC 02 .	Mot,NS,TI
	IC....9	50.17.1113	74 HC 113	.. 74 HC 113 .	Mot,NS,TI
(00)	IC....10	50.09.0158	NE 5455 P1	.. 555 .., HA 17555 PS	Fc,Hi,Mot,Ras,Sig
(02)	IC....10	50.07.0036	ICM7555IPA		Is,Ma
	IC....11	50.17.1540	74 HC 540	.. 74 HC 540 .	Mot,NS,TI

IND.	POS.NO.	PART NO.	VALUE	SPECIFICATIONS / EQUIVALENT	MANUF.
	IC....12	50.17.1541	74 HC 541	.. 74 HC 541 .	Mot,NS,TI
	IC....13	50.05.0203	SN 75463 P	DS 3613 N	NS,TI
	IC....14	50.05.0203	SN 75463 P	DS 3613 N	NS,TI
	IC....15	50.05.0203	SN 75463 P	DS 3613 N	NS,TI
	P.....1	54.11.2004		2 * 32 contacts, see note 1	
	R.....1	57.11.4331	330 Ohm	10%	
	R.....2	57.11.4332	3.3 kOhm	5%	
(00)	R.....3	57.11.4123	12 kOhm	5%	
(01)	R.....3	57.11.4222	2.2 kOhm	5%	
	R.....4	57.11.4103	10 kOhm	5%	
(00)	R.....5	57.11.4472	4.7 kOhm	5%	
(01)	R.....5	57.11.4153	15 kOhm	5%	
(00)	R.....6	57.11.4102	1.0 kOhm	5%	
(01)	R.....6	57.11.4332	3.3 kOhm	5%	
	R.....7	57.11.4103	10 kOhm	5%	
	R.....8	57.11.4393	39 kOhm	5%	
(00)	RZ....1	1.010.014.57	10 kOhm	10% See note 2	
(01)	RZ....1	57.88.4103	10 kOhm	10% See note 2	
(00)	RZ....2	1.010.014.57	10 kOhm	10% See note 2	
(01)	RZ....2	57.88.4103	10 kOhm	10% See note 2	
	RZ....3	57.88.4332	3.3 kOhm	10% See note 3	
(01)	TP....1	54.02.0320	test pin		
(01)	TP....2	54.02.0320	test pin		

(01) 85.07.05 Testing points TP1 and TP2 implemented.
improved protection for IC 1, pin 9, (D8).
(correction of values C1,R3,R5,R6,RZ1,RZ2 because mistake).

(02) 85.11.06 Improved frequency accuracy IC 10.

Note 1 - Connector: 2 * 32 Euro Print
Burndy PI 64 B 20 P00 F00 Z0
Erni 9722.563.191

Note 2 - Network: 8 * 10 kOhm, 5%, single line
Bourns 4609 X - 101 - 103
Sprague 256 CJ 103 X 2 P0
Beckmann L - 09 - 1 - R 10 kJ
Matsushita F 9 E 10 k 5%
Tama MRG C 09 X 10 k J

Note 3 - Network: 8 * 3.3 kOhm, 5%, single line
Bourns 4609 X - 101 - 332
Sprague 256 CJ 332 X 2 P0
Beckmann L - 09 - 1 - R 3.3 k J
Matsushita F 9 E 3.3 k 5%
Tama MRG C 09 X 3.3 k J

Manufacturer: AMI=American Microsystem Inc., Fc=Fairchild,
Hi=Hitachi, ITT=Intermetall, Is=Intersil, Ma=Maxim,
Mot=Motorola, NS=National Semiconductors,
Ph=Philips, Ra=Raytheon, RCA=RCA Corporation of America,
Sig=Signetics, TI=Texas Instruments, To=Toshiba.

ORIG 84/06/29 (01) 85/07/05 (02) 85/11/06

TAPE DECK PERIPHERY CONTROL 1.820.762.81

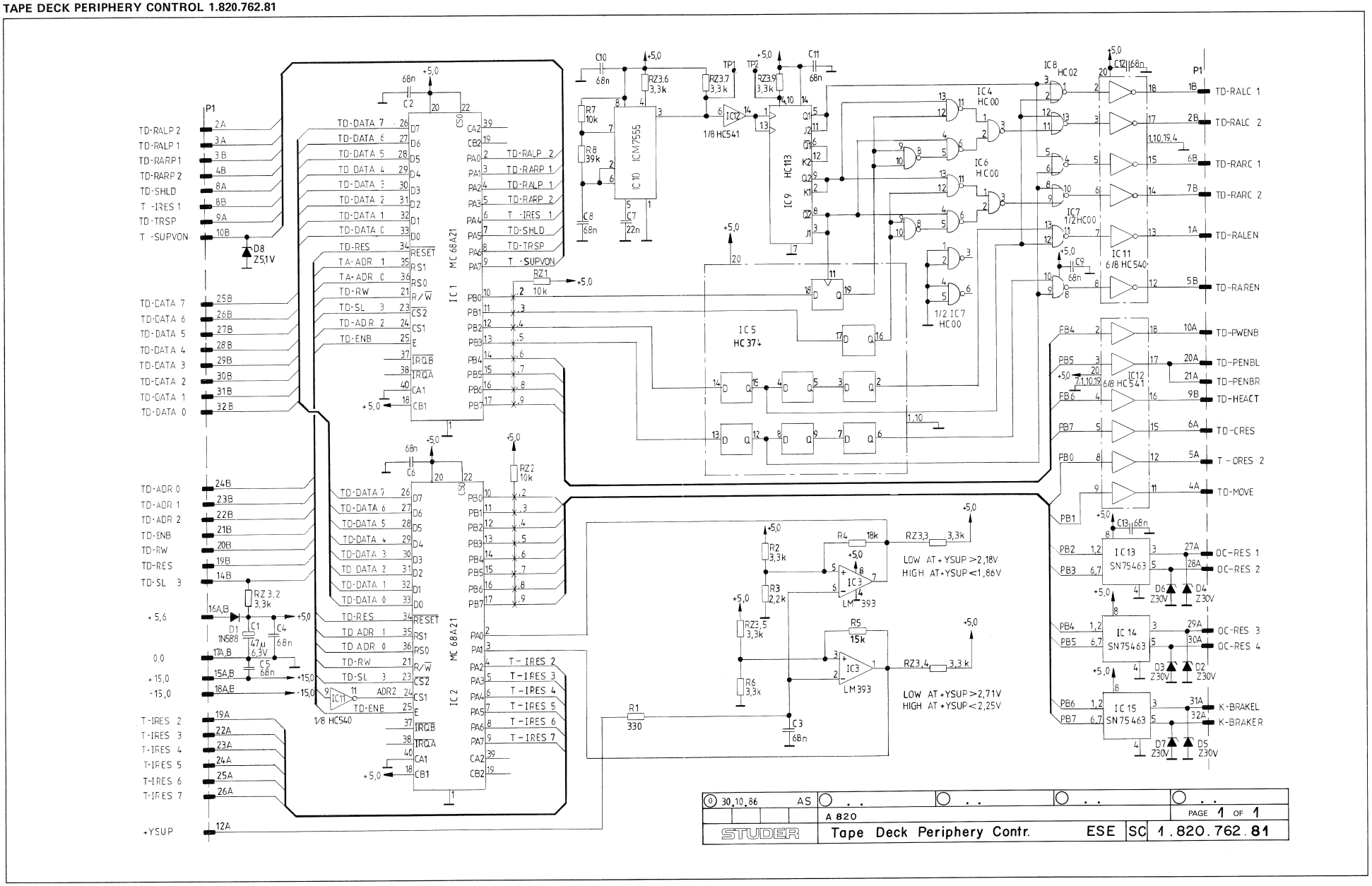

TAPE DECK PERIPHERY CONTROL 1.820.762.81

COMPONENT SIDE

TAPE DECK PERIPHERY CTR. 1.820.762-81

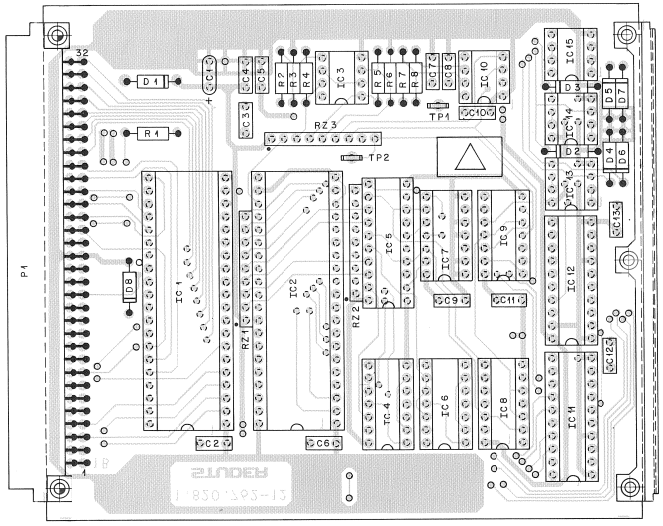

IND.	POS.NO.	PART NO.	VALUE	SPECIFICATIONS / EQUIVALENT	MANUF.
	C.....1	59.26.0470	47 uF	20%, 6.3V	
	C.....2	59.06.0683	68 nF	20%	
	C.....3	59.06.0683	68 nF	20%	
	C.....4	59.06.0683	68 nF	20%	
	C.....5	59.06.0683	68 nF	20%	
	C.....6	59.06.0683	68 nF	20%	
	C.....7	59.06.0223	22 nF	10%	
	C.....8	59.06.5683	68 nF	5%	
	C.....9	59.06.0683	68 nF	20%	
	C....10	59.06.0683	68 nF	20%	
	C....11	59.06.0683	68 nF	20%	
	C....12	59.06.0683	68 nF	20%	
	C....13	59.06.0683	68 nF	20%	
	D.....1	50.04.0512	IN 5818	LN 5819	Mot
	D.....2	50.04.1125	30 V Z	ZPD 30	ITT
	D.....3	50.04.1125	30 V Z	ZPD 30	ITT
	D.....4	50.04.1125	30 V Z	ZPD 30	ITT
	D.....5	50.04.1125	30 V Z	ZPD 30	ITT
	D.....6	50.04.1125	30 V Z	ZPD 30	ITT
	D.....7	50.04.1125	30 V Z	ZPD 30	ITT
	D.....8	50.04.1112	5.1 V Z	BZX83C 5V1, BZX55C 5V1, ZPD 5.1	ITT,Ses
	IC.....1	50.16.0106	MC68 A 21P	S68 A 21P	AMI,Fc,Mot
	IC.....2	50.16.0106	MC68 A 21P	S68 A 21P	AMI,Fc,Mot
	IC.....3	50.05.0283	LM 393 N	LM 393 P	NS,TI
	IC.....4	50.17.1000	74 HC 00	= 74 HC 00 *	Mot,NS,TI
	IC.....5	50.17.1374	74 HC 374	= 74 HC 374 *	Mot,NS,TI
	IC.....6	50.17.1000	74 HC 00	= 74 HC 00 *	Mot,NS,TI
	IC.....7	50.17.1000	74 HC 00	= 74 HC 00 *	Mot,NS,TI
	IC.....8	50.17.1002	74 HC 02	= 74 HC 02 *	Mot,NS,TI
	IC.....9	50.17.1113	74 HC 113	= 74 HC 113 *	Mot,NS,TI
	IC....10	50.07.0036	ICM7555IPA		Is+Ma
	IC....11	50.17.1540	74 HC 540	= 74 HC 540 *	Mot,NS,TI
	IC....12	50.17.1541	74 HC 541	= 74 HC 541 *	Mot,NS,TI
	IC....13	50.05.0203	SN 75463 P	DS 3613 N	NS,TI
	IC....14	50.05.0203	SN 75463 P	DS 3613 N	NS,TI

IND.	POS.NO.	PART NO.	VALUE	SPECIFICATIONS / EQUIVALENT	MANUF.
	IC....15	50.05.0203	SN 75463 P	DS 3613 N	NS,TI
	P.....1	54.11.2004		2 * 32 contacts, see note 1	
	R.....1	57.11.4331	330 Ohm	10%	
	R.....2	57.11.4332	3.3 kOhm	5%	
	R.....3	57.11.4222	2.2 kOhm	5%	
	R.....4	57.11.4183	18 kOhm	5%	
	R.....5	57.11.4153	15 kOhm	5%	
	R.....6	57.11.4332	3.3 kOhm	5%	
	R.....7	57.11.4103	10 kOhm	5%	
	R.....8	57.11.4393	39 kOhm	5%	
	RZ....1	57.88.4103	10 kOhm	10% See note 2	
	RZ....2	57.88.4103	10 kOhm	10% See note 2	
	RZ....3	57.88.4332	3.3 kOhm	10% See note 3	
	TP....1	54.02.0320	test pin		
	TP....2	54.02.0320	test pin		

IND.	POS.NO.	PART NO.	VALUE	SPECIFICATIONS / EQUIVALENT	MANUF.

Note 1 - Connector: 2 * 32 Euro Print
Burndy PT 64 B 20 POG POG ZO
Erni 9722.563.191

Note 2 - Network: 8 * 10 kOhm, 5%, single line
Bourns 4609 X - 101 - 103
Sprague 256 CJ 103 X Z PD
Beckmann L - 09 - 1 - R 10 kJ
Matsushita F 9 E 10 K 53
Tama MRG C 09 X 10 K J

Note 3 - Network: 8 * 3.3 kOhm, 5%, single line
Bourns 4609 X - 101 - 332
Sprague 256 CJ 332 X Z PD
Beckmann L - 09 - 1 - R 3.3 k J
Matsushita F 9 E 3.3 K 53
Tama MRG C 09 X 3.3 K J

Manufacturer: AMI=American Microsystem Inc., Fc=Fairchild,
Hi=Hitachi, ITT=Intermetall, Is=Intersil, MaxMaxim,
Mot=Motorola, NS=National Semiconductors,
Ph=Philips, Ra=Raytheon, RCA=RCA Corporation of America,
Sig=Signetics, TI=Texas Instruments, Toftoshiba.

MRIG 86/10/30

BLOCK DIAGRAM
OPTO SENSOR 1.820.793

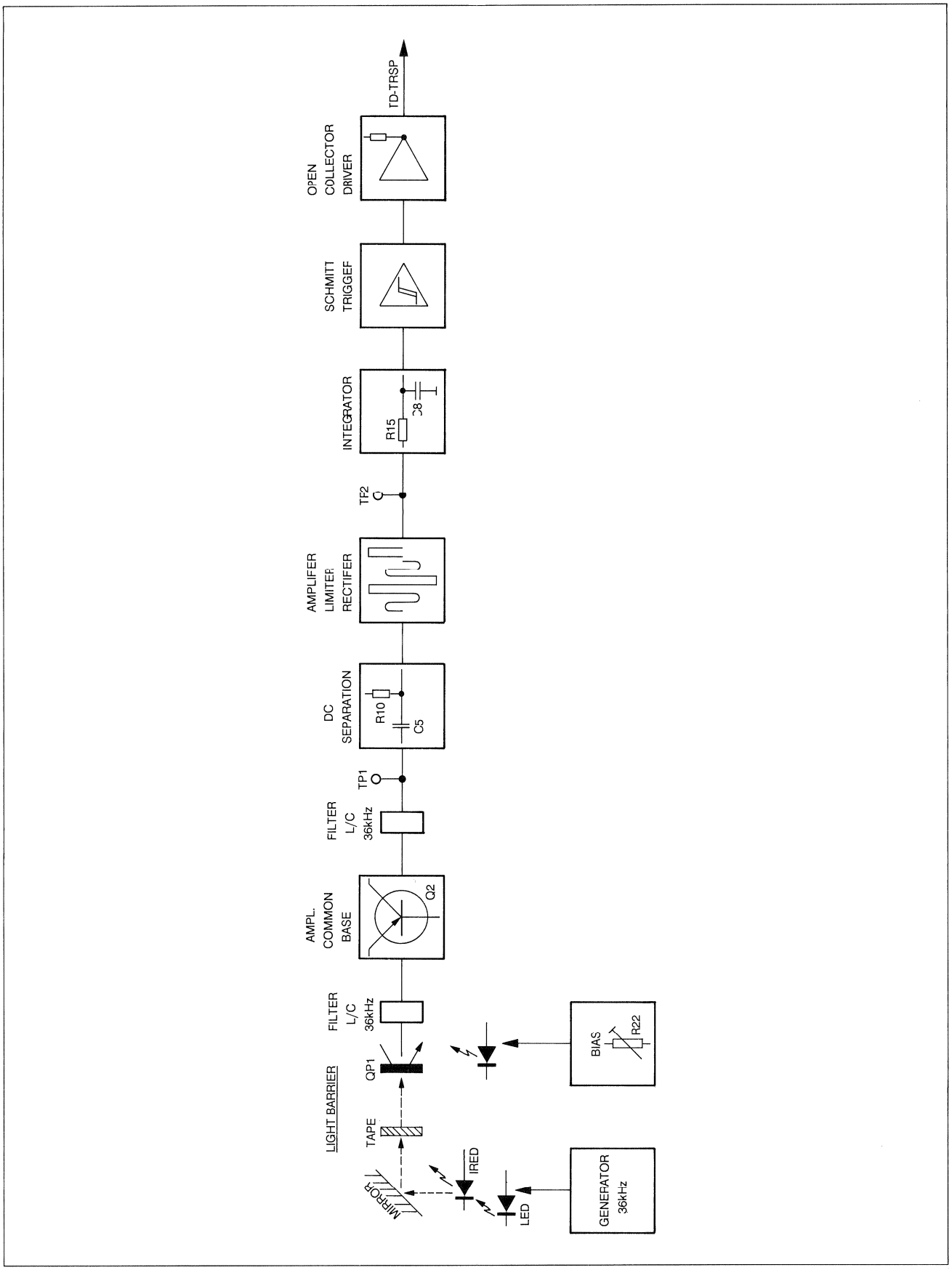

OPTO SENSOR 1.820.793.82

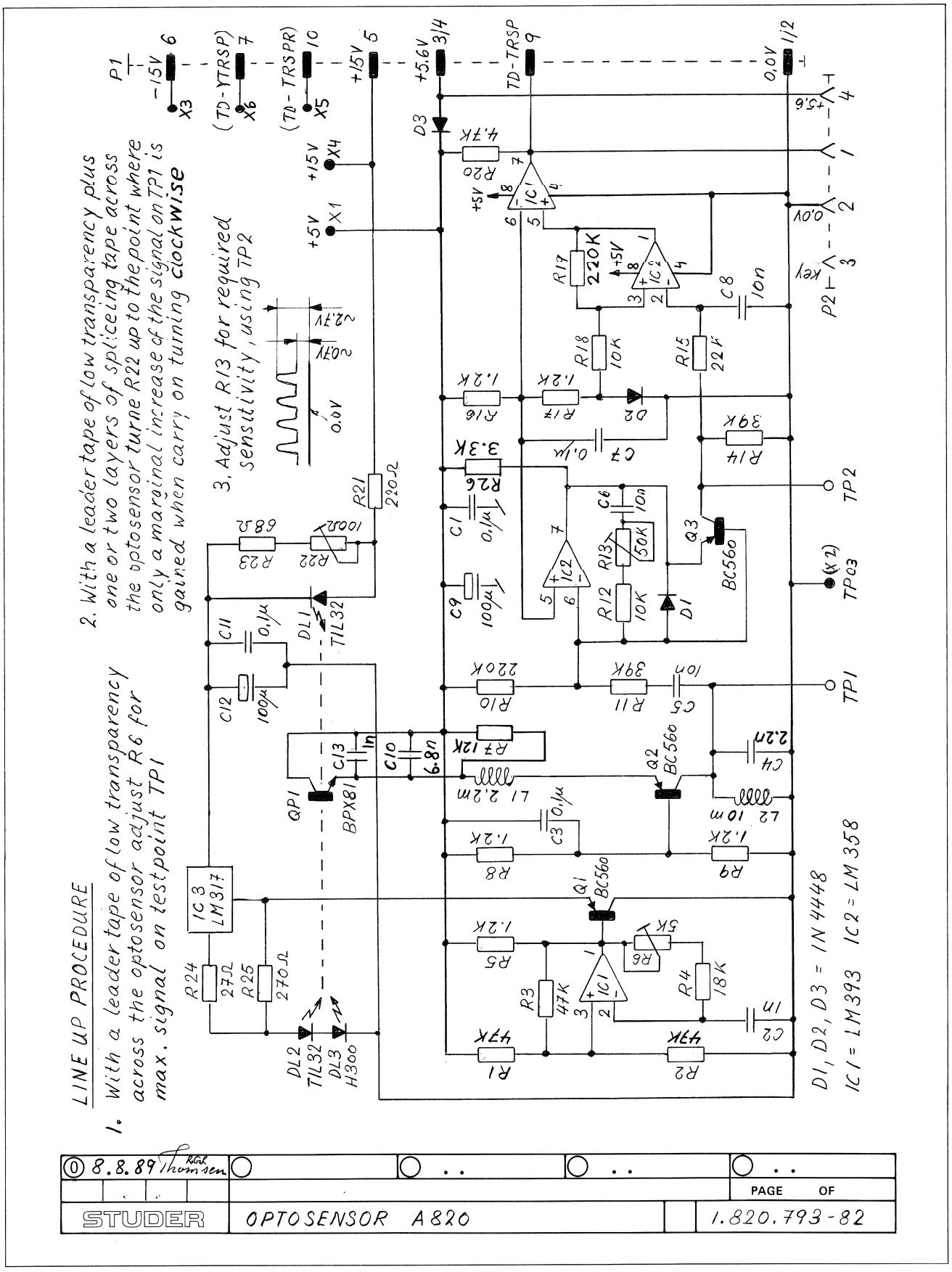

OPTO SENSOR 1.820.793.82

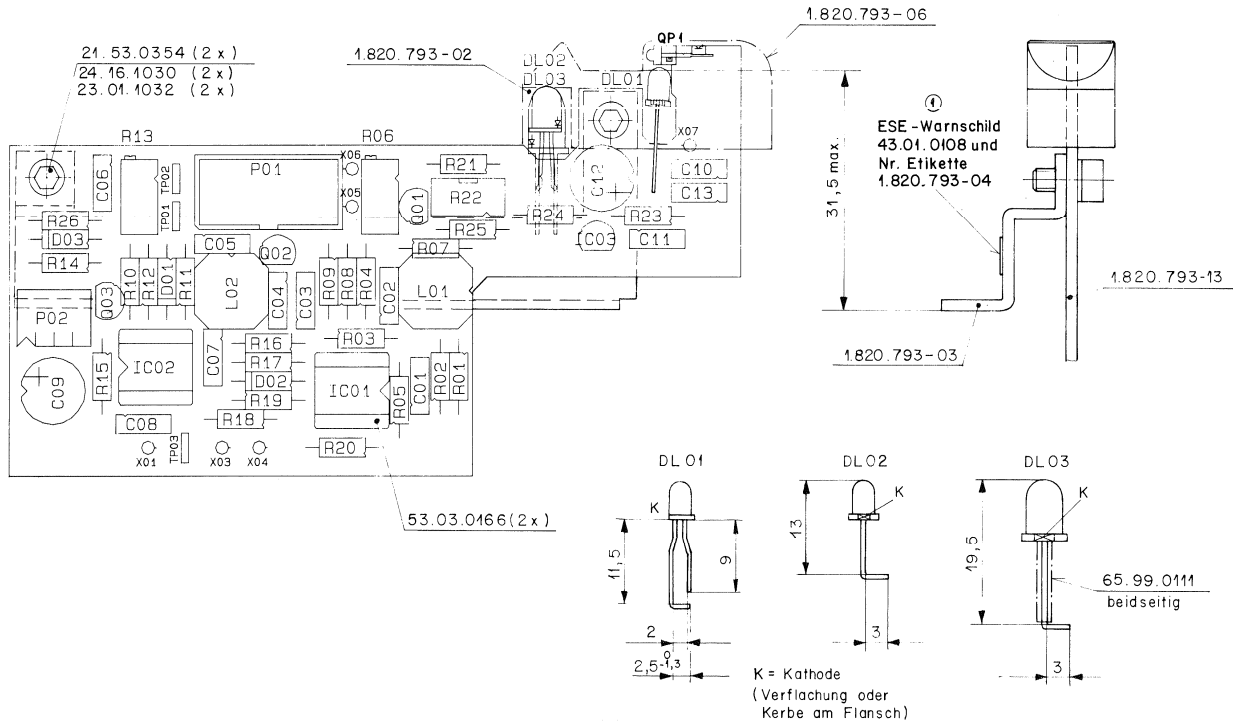

IND.	POS.NO.	PART NO.	VALUE	SPECIFICATIONS / EQUIVALENT	MANUF.
	C.....1	59.06.0104	0.1 uF	10%, 63V , PETP	
	C.....2	59.06.0102	1 nF	10%, 63V , PETP	
	C.....3	59.06.0104	0.1 uF	10%, 63V , PETP	
	C.....4	59.06.5222	2.2 nF	5%, 63V , PETP	
	C.....5	59.06.0103	10 nF	10%, 63V , PETP	
	C.....6	59.06.0103	10 nF	10%, 63V , PEFT	
	C.....7	59.06.0401	0.1 uF	10%, 63V , PETP	
	C.....8	59.06.0103	10 nF	10%, 63V , PETP	
	C.....9	59.22.3101	100 uF	20%, 10V , EL	
	C....10	59.06.5682	6.8 nF	5%, 63V , PETP	
	C....11	59.06.0104	0.1 uF	10%, 63V , PETP	
	C....12	59.22.3101	100 uF	20%, 10V , EL	
	C....13	59.06.0102	1 nF	10%, 63V , PETP	
	D.....1	50.04.0125	1N4448	R-OHM,Fc,ITT,Ph,Tf,Mot	
	D.....2	50.04.0125	1N4448	R-OHM,Fc,ITT,Ph,Tf,Mot	
	D.....3	50.04.0125	1N4448	R-OHM,Fc,ITT,Ph,Tf,Mot	
	DL....1	50.04.2110	OP160SL	LED,IR TIL32	Op,TI
	DL....2	50.04.2110	OP160SL	LED,IR TIL32	Op,TI
	DL....3	50.04.2155	ER300	LED,RED	STY
	IC....1	50.05.0283	LM 393 N	LM 393 P	Tho,NS,TI
	IC....2	50.05.0286	LM 358 M		Mot,NS,SGS,Sig,TI
	IC....3	50.10.0108	LM 317 LZ		Mot,NS
	L.....1	62.02.3222	2.2mH		TDK
	L.....2	62.02.3103	10mH		TDK
	P.....1	54.14.2001	Connector	10 contacts, flat cable	
	P.....2	54.01.0304	Connector	4 contacts, CIS	
	Q.....1	54.03.0496	BC 560		Sie
	Q.....2	54.03.0496	BC 560		Sie
	Q.....3	54.03.0496	BC 560		Sie
	QP....1	50.04.5001	BPX 81		Sie

IND.	POS.NO.	PART NO.	VALUE	SPECIFICATIONS / EQUIVALENT	MANUF.
	R.....1	57.11.3473	47 kOhm	1%	
	R.....2	57.11.3473	47 kOhm	1%	
	R.....3	57.11.3473	47 kOhm	1%	
	R.....4	57.11.3183	18 kOhm	1%	
	R.....5	57.11.3122	1.2 kOhm	1%	
	R.....6	58.05.0502	5 kOhm	10% potentiometer	
	R.....7	57.11.3123	12 kOhm	1%	
	R.....8	57.11.3122	1.2 kOhm	1%	
	R.....9	57.11.3122	1.2 kOhm	1%	
(00)	R....10	57.11.3224	220 kOhm	1%	
(01)	R....10	57.11.3184	180 kOhm	1%	
	R....11	57.11.3393	39 kOhm	1%	
	R....12	57.11.3103	10 Ohm	1%	
	R....13	58.05.0503	50 kOhm	10% Potentiometer	
	R....14	57.11.3393	39 kOhm	1%	
	R....15	57.11.3223	22 kOhm	1%	
	R....16	57.11.3122	1.2 kOhm	1%	
	R....17	57.11.3122	1.2 kOhm	1%	
	R....18	57.11.3103	10 kOhm	1%	
	R....19	57.11.3224	220 kOhm	1%	
	R....20	57.11.3472	4.7 kOhm	1%	
	R....21	57.11.3221	220 Ohm	1%	
	R....22	58.01.9101	100 Ohm	10% Potentiometer	
	R....23	57.11.3680	68 Ohm	1%	
(00)	R....24	57.11.3270	27 Ohm	1%	
(01)	R....24	57.11.3330	33 Ohm	1%	
	R....25	57.11.3271	270 Ohm	1%	
	R....26	57.11.3332	3.3 kOhm	1%	
	TP....1	54.02.0320		test pin	
	TP....2	54.02.0320		test pin	
	TP....3	54.02.0320		test pin	

IND.	POS.NO.	PART NO.	VALUE	SPECIFICATIONS / EQUIVALENT	MANUF.

(01) 05.12.89 Sensitivity correction.

CER=Ceramic, EL=Electrolytic, PETP=Polyester, SAL=Solid Aluminum

Manufacturers: Fc=Fairchild, ITT=Intermetall, Mot=Motorola
NS=National Semiconductors, Op=Optron, Ph=Philips
Ra=Raytheon, Ses=Sescosem, Sie=Siemens, Sig=Signetics
Sty=Stanley, Tf=Telefunken, Tho=Thomson, TI=Texas Instruments

ORIG 89/08/30 (01) 89/12/05

BLOCK DIAGRAM
TAPE LIFTER CONTROL 1.820.773

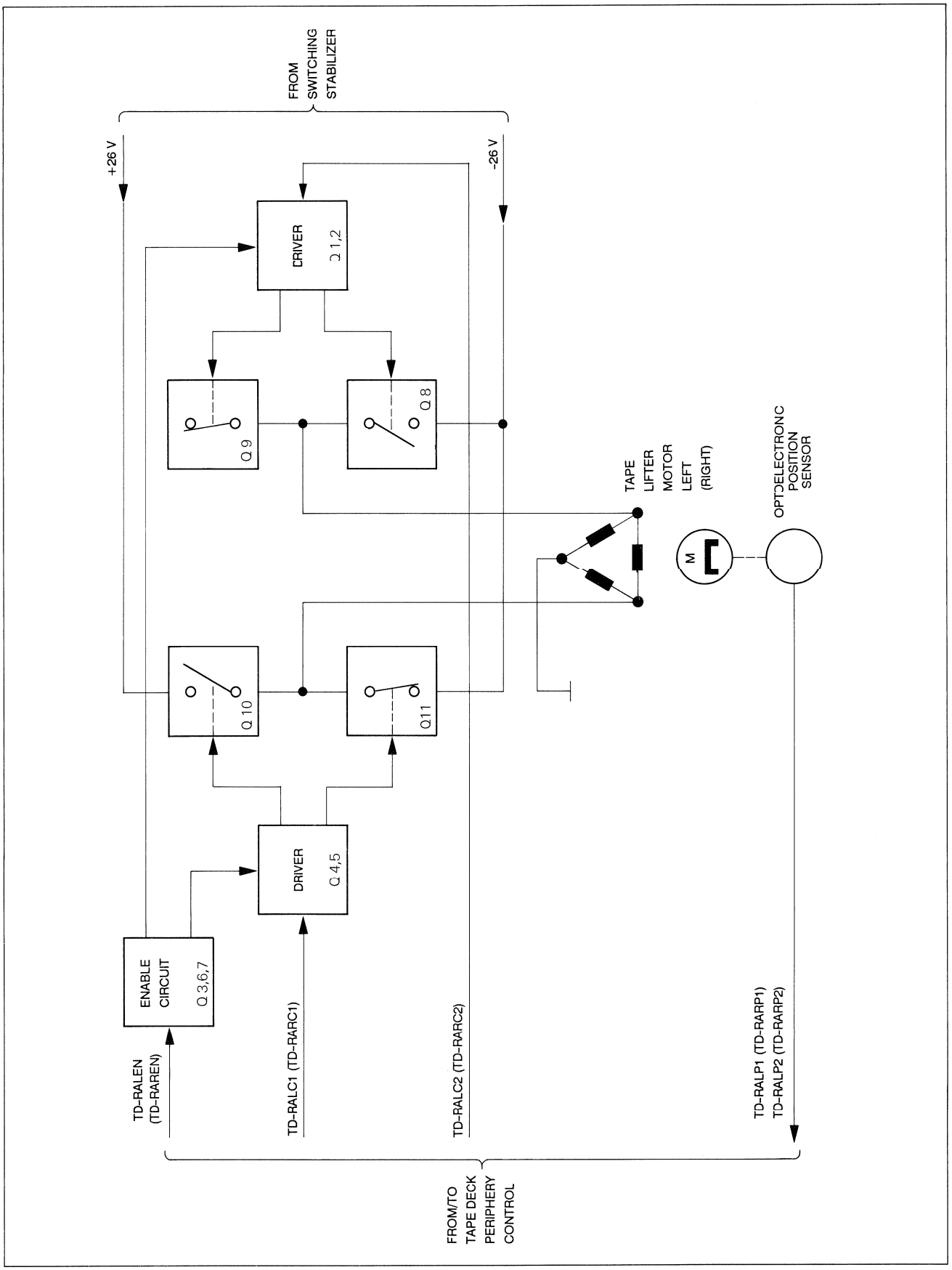

TAPE LIFTER CONTROL 1.820.773.82

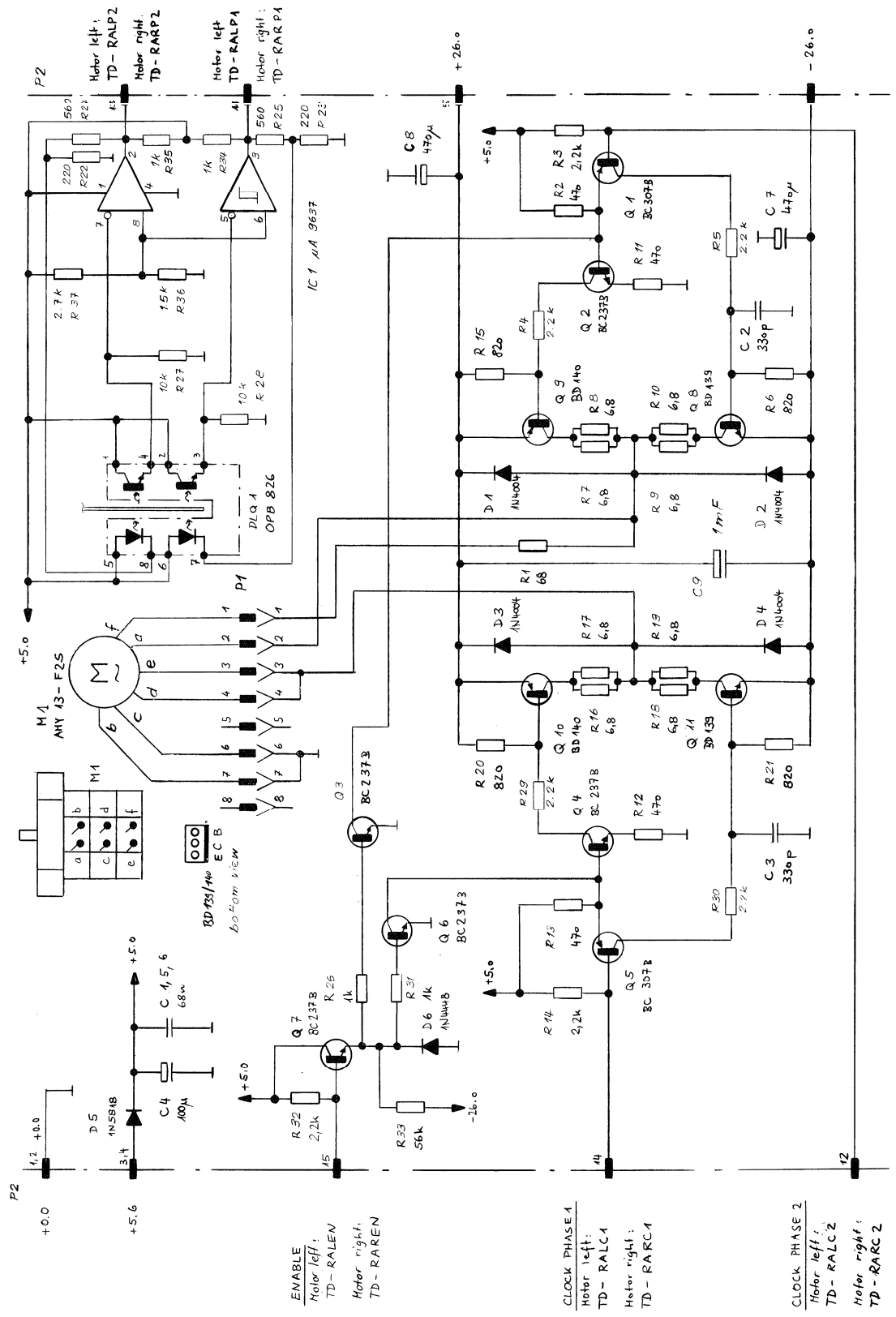

0 9.7.85		A 820 Tape Transport Section		
STUDER	Tape Lifter Control	SC	1.820.773-82	PAGE 1 OF 1

TAPE LIFTER CONTROL 1.820.773.82

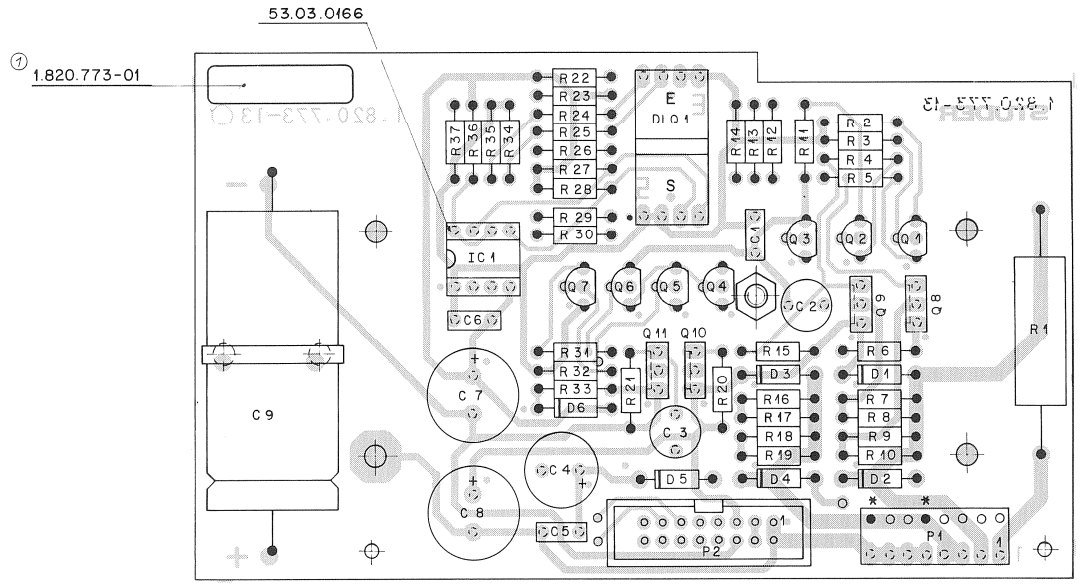

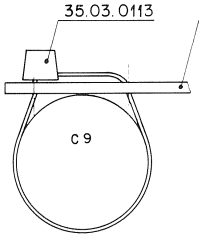

* Codierung : Schaltdraht 64.01.0108 ø 0,8 x 8mm
(muss 1mm vorstehen)

IND.	POS.NO.	PART NO.	VALUE	SPECIFICATIONS / EQUIVALENT	MANUF.
	C.....1	59.06.0683	68 nF	10%, 63V, PETP	
	C.....2	59.05.2331	330 pF	2.5%, 63V, PP	
	C.....3	59.05.2331	330 pF	2.5%, 63V, PP	
	C.....4	59.22.4101	100 uF	10%, 16V, El	
	C.....5	59.06.0683	68 nF	10%, 63V, PETP	
	C.....6	59.06.0683	68 nF	10%, 63V, PETP	
	C.....7	59.22.6471	470 uF	10%, 40V, El	
	C.....8	59.22.6471	470 uF	10%, 40V, El	
	C.....9	59.25.6102	1000 uF	63V, El	
	D.....1	50.04.0122	1N 4001	... 1N 4004	Mot
	D.....2	50.04.0122	1N 4001	... 1N 4004	Mot
	D.....3	50.04.0122	1N 4001	... 1N 4004	Mot
	D.....4	50.04.0122	1N 4001	... 1N 4004	Mot
	D.....5	50.04.0512	1N 5818	1N 5819	Mot
	D.....6	50.04.0125	1N 4448		Fc,ITT,Ph,Ses,Tf
	DLQ....1	50.99.0166	OPB 826S		Op
	IC....1	50.15.0114	uA 9637A		TI,Fc
	P.....1	54.01.0289		see note 1	
	P.....2	54.14.2002		see note 2	
	Q.....1	50.03.0515	BC 307 B	BC 251 B, BC 557 B	ITT,Mot,Ph
	Q.....2	50.03.0436	BC 237 B	BC 547 B, BC 550 B	ITT,Mot,Ph,Sie
	Q.....3	50.03.0436	BC 237 B	BC 547 B, BC 550 B	ITT,Mot,Ph,Sie
	Q.....4	50.03.0436	BC 237 B	BC 547 B, BC 550 B	ITT,Mot,Ph,Sie
	Q.....5	50.03.0515	BC 307 B	BC 251 B, BC 557 B	ITT,Mot,Ph
	Q.....6	50.03.0436	BC 237 B	BC 547 B, BC 550 B	ITT,Mot,Ph,Sie
	Q.....7	50.03.0436	BC 237 B	BC 547 B, BC 550 B	ITT,Mot,Ph,Sie
	Q.....8	50.03.0451	BD 139-10		Mot,Ph,SGS,Tf,To
	Q.....9	50.03.0452	BD 140-10		Mot,Ph,SGS,Tf,To
	Q....10	50.03.0452	BD 140-10		Mot,Ph,SGS,Tf,To
	Q....11	50.03.0451	BD 139-10		Mot,Ph,SGS,Tf,To
	R.....1	57.56.5680	68 Ohm	10%, 4 W	

IND.	POS.NO.	PART NO.	VALUE	SPECIFICATIONS / EQUIVALENT	MANUF.
	R.....2	57.11.4471	470 Ohm	2%	
	R.....3	57.11.4222	2.2 kOhm	2%	
	R.....4	57.11.4222	2.2 kOhm	2%	
	R.....5	57.11.4222	2.2 kOhm	2%	
	R.....6	57.11.4821	820 Ohm	2%	
	R.....7	57.11.4689	6.8 Ohm	5%	
	R.....8	57.11.4689	6.8 Ohm	5%	
	R.....9	57.11.4689	6.8 Ohm	5%	
	R....10	57.11.4689	6.8 Ohm	5%	
	R....11	57.11.4471	470 Ohm	2%	
	R....12	57.11.4471	470 Ohm	2%	
	R....13	57.11.4471	470 Ohm	2%	
	R....14	57.11.4222	2.2 kOhm	2%	
	R....15	57.11.4821	820 Ohm	2%	
	R....16	57.11.4689	6.8 Ohm	5%	
	R....17	57.11.4689	6.8 Ohm	5%	
	R....18	57.11.4689	6.8 Ohm	5%	
	R....19	57.11.4689	6.8 Ohm	5%	
	R....20	57.11.4821	820 Ohm	2%	
	R....21	57.11.4821	820 Ohm	2%	
	R....22	57.11.4221	220 Ohm	2%	
	R....23	57.11.4221	220 Ohm	2%	
	R....24	57.11.4561	560 Ohm	2%	
	R....25	57.11.4561	560 Ohm	2%	
	R....26	57.11.4102	1 kOhm	2%	
	R....27	57.11.4103	10 kOhm	2%	
	R....28	57.11.4103	10 kOhm	2%	
	R....29	57.11.4222	2.2 kOhm	2%	
	R....30	57.11.4222	2.2 kOhm	2%	
	R....31	57.11.4102	1 kOhm	2%	
	R....32	57.11.4222	2.2 kOhm	2%	
	R....33	57.11.4563	56 kOhm	2%	
	R....34	57.11.4102	1 kOhm	2%	
	R....35	57.11.4102	1 kOhm	2%	
	R....36	57.11.4152	1.5 kOhm	2%	
	R....37	57.11.4272	2.7 kOhm	2%	

IND.	POS.NO.	PART NO.	VALUE	SPECIFICATIONS / EQUIVALENT	MANUF.

Note 1 - Connector: AMP Nr. --163.680-6

Note 2 - Connector: Yamaichi Nr. FAP-16-08//4
Burndy Nr. BPH 9 B 16 800 GS

El=Electrolytic, PP=Polypropylene

Manufacturer: Fc=Fairchild, ITT=Intermetall, Mot=Motorola, Op=Optron,
Ph=Philips, Ses=Seacosem, SGS=SGS/Ates, Sie=Siemens,
Tf=Telefunken, TI=Texas Instruments, To=Toshiba.

ORIG 85/07/08

BLOCK DIAGRAM
TAPE DECK COUNTER TIMER 1.820.761

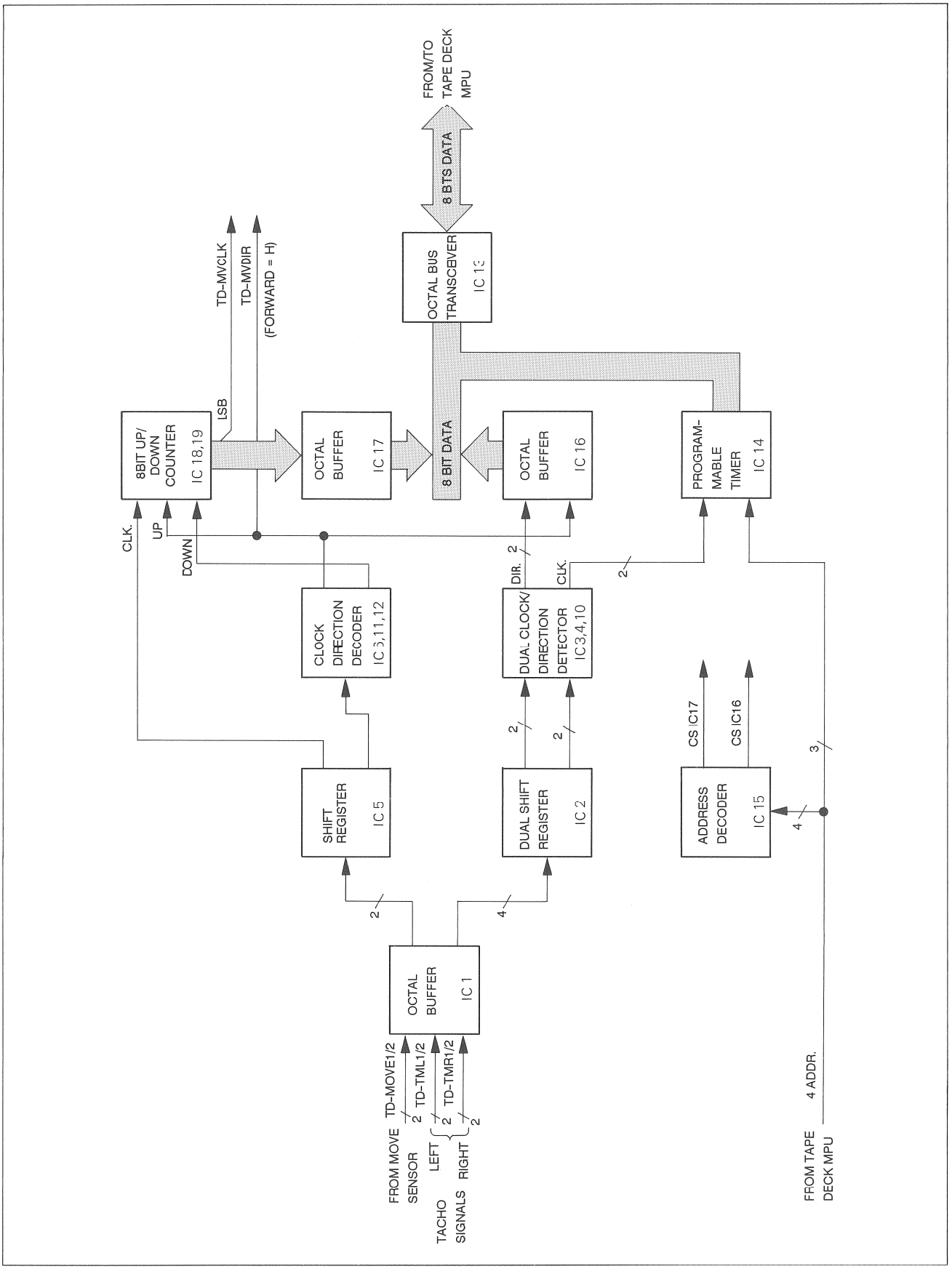

TAPE DECK COUNTER TIMER 1.820.761.82

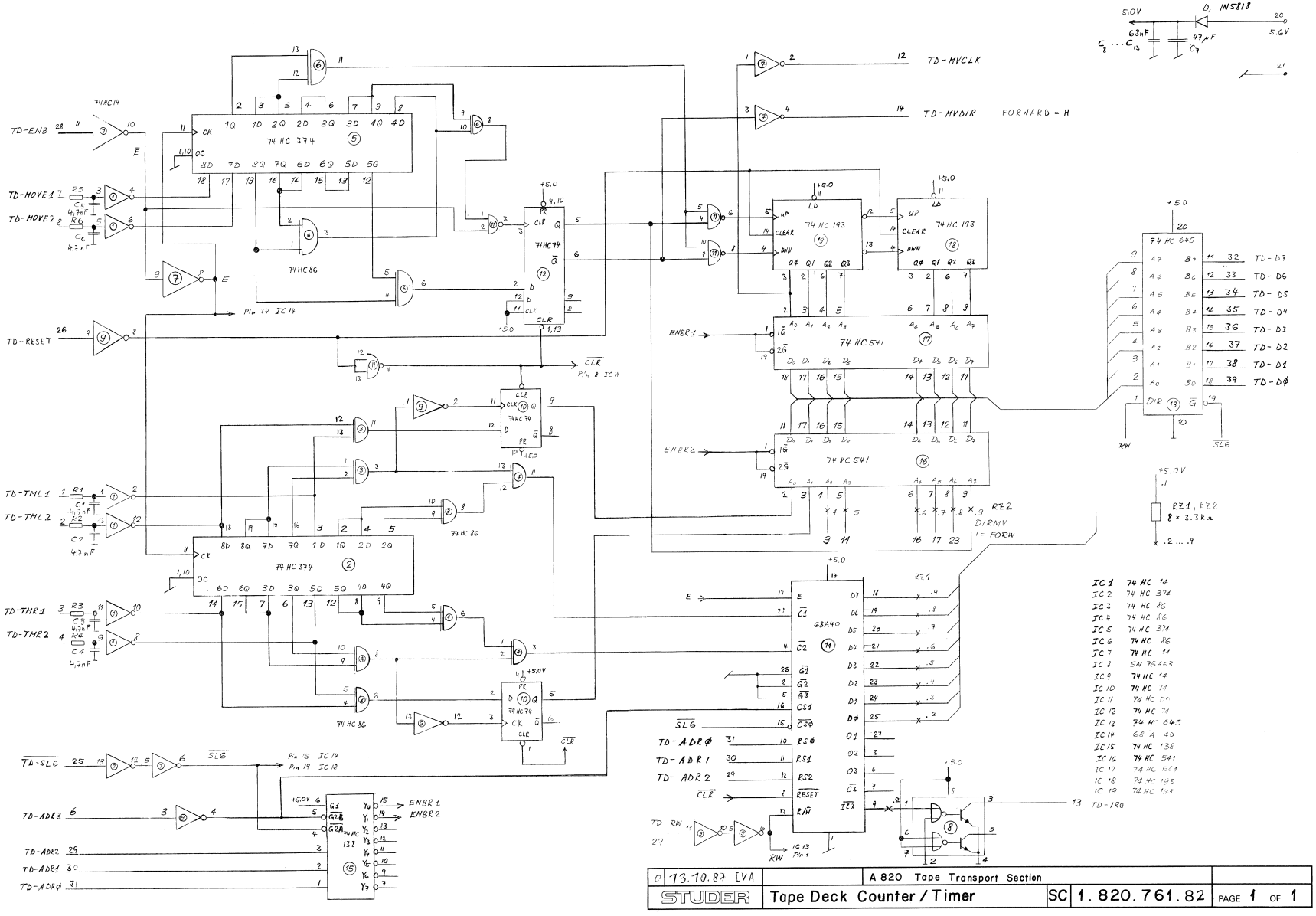

0	13.10.87 IVA		A 820 Tape Transport Section		
STUDER	Tape Deck Counter / Timer	SC	1.820.761.82	PAGE 1	OF 1

TAPE DECK COUNTER TIMER 1.820.761.82

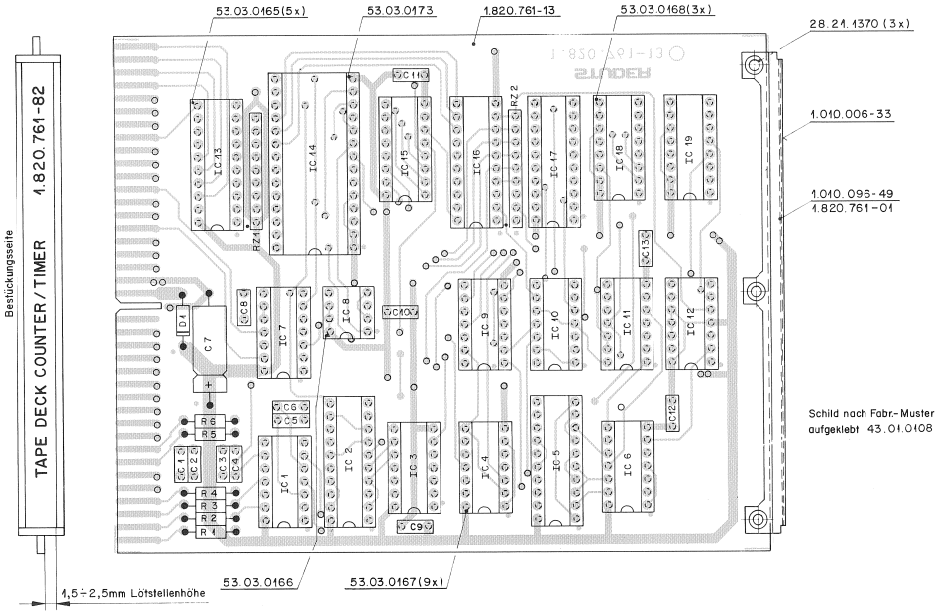

IND.	POS.NO.	PART NO.	VALUE	SPECIFICATIONS / EQUIVALENT	MANUF.
	C....1	59.06.0472	4.7 nF	10%, 63V, PETP	
	C....2	59.06.0472	4.7 nF	10%, 63V, PETP	
	C....3	59.06.0472	4.7 nF	10%, 63V, PETP	
	C....4	59.06.0472	4.7 nF	10%, 63V, PETP	
	C....5	59.06.0472	4.7 nF	10%, 63V, PETP	
	C....6	59.06.0472	4.7 nF	10%, 63V, PETP	
	C....7	59.25.3470	47 uF	-20%, 16V, El	
	C....8	59.06.0683	68 nF	10%, 63V, PETP	
	C....9	59.06.0683	68 nF	10%, 63V, PETP	
	C....10	59.06.0683	68 nF	10%, 63V, PETP	
	C....11	59.06.0683	68 nF	10%, 63V, PETP	
	C....12	59.06.0683	68 nF	10%, 63V, PETP	
	C....13	59.06.0683	68 nF	10%, 63V, PETP	
	D....1	50.04.0512	1N 5818	1N 5819	Mot
	IC....1	50.17.1014	74 HC 14	.. 74 HC 14 .	Mot,NS,Ph,RCA,TI,To
	IC....2	50.17.1374	74 HC 374	.. 74 HC 374 .	Mot,NS,Ph,RCA,SGS,TI,To
	IC....3	50.17.1086	74 HC 86	.. 74 HC 86 .	Mot,NS,Ph,RCA,SGS,TI,To
	IC....4	50.17.1086	74 HC 86	.. 74 HC 86 .	Mot,NS,Ph,RCA,SGS,TI,To
	IC....5	50.17.1374	74 HC 374	.. 74 HC 374 .	Mot,NS,Ph,RCA,SGS,TI,To
	IC....6	50.17.1086	74 HC 86	.. 74 HC 86 .	Mot,NS,Ph,RCA,SGS,TI,To
	IC....7	50.17.1014	74 HC 14	.. 74 HC 14 .	Mot,NS,Ph,RCA,TI,To
	IC....8	50.05.0203	SN 75463 P	SN 75463 JG, SN 55463 JG, DS 3613 N NS,TI	
	IC....9	50.17.1014	74 HC 14	.. 74 HC 14 .	Mot,NS,Ph,RCA,TI,To
	IC....10	50.17.1074	74 HC 74	.. 74 HC 74 .	Mot,NS,Ph,RCA,SGS,TI,To
	IC....11	50.17.1000	74 HC 00	.. 74 HC 00 .	Mot,NS,Ph,RCA,SGS,TI,To
	IC....12	50.17.1074	74 HC 74	.. 74 HC 74 .	Mot,NS,Ph,RCA,SGS,TI,To
	IC....13	50.17.1645	74 HC 645	.. 74 HC 645 .	Mot,NS,Ph,RCA,SGS,TI,To
	IC....14	50.16.0113	MC 68A 40P	HD 68A 40P	Hi,Mot
	IC....15	50.17.1138	74 HC 138	.. 74 HC 138 .	Mot,NS,Ph,RCA,SGS,TI,To
	IC....16	50.17.1541	74 HC 541	.. 74 HC 541 .	Mot,NS,Ph,RCA,SGS,TI,To
	IC....17	50.17.1541	74 HC 541	.. 74 HC 541 .	Mot,NS,Ph,RCA,SGS,TI,To
	IC....18	50.17.1193	74 HC 193	.. 74 HC 193 .	Mot,NS,Ph,RCA,SGS,TI,To
	IC....19	50.17.1193	74 HC 193	.. 74 HC 193 .	Mot,NS,Ph,RCA,SGS,TI,To
	R....1	57.11.3101	100 Ohm		

IND.	POS.NO.	PART NO.	VALUE	SPECIFICATIONS / EQUIVALENT	MANUF.
	R....2	57.11.3101	100 Ohm		
	R....3	57.11.3101	100 Ohm		
	R....4	57.11.3101	100 Ohm		
	R....5	57.11.3101	100 Ohm		
	R....6	57.11.3101	100 Ohm		
	RZ....1	57.88.4332		Network, 8 x 3.3 kOhm, 5%, single line	
	RZ....2	57.88.4332		Network, 8 x 3.3 kOhm, 5%, single line	

Cer=Ceramic, El=Electrolytic, PETP=Polyesterfile.

MANUFACTURER: Hi=Hitachi, Mot=Motorola, NS=National Semiconductors,
Ph=Philips, RCA=RCA Corporation, SGS=SGS/Ates,
TI=Texas Instruments, To=Toshiba.

ORIG 87/10/13

TD COUNTER TIMER 1.820.823.00

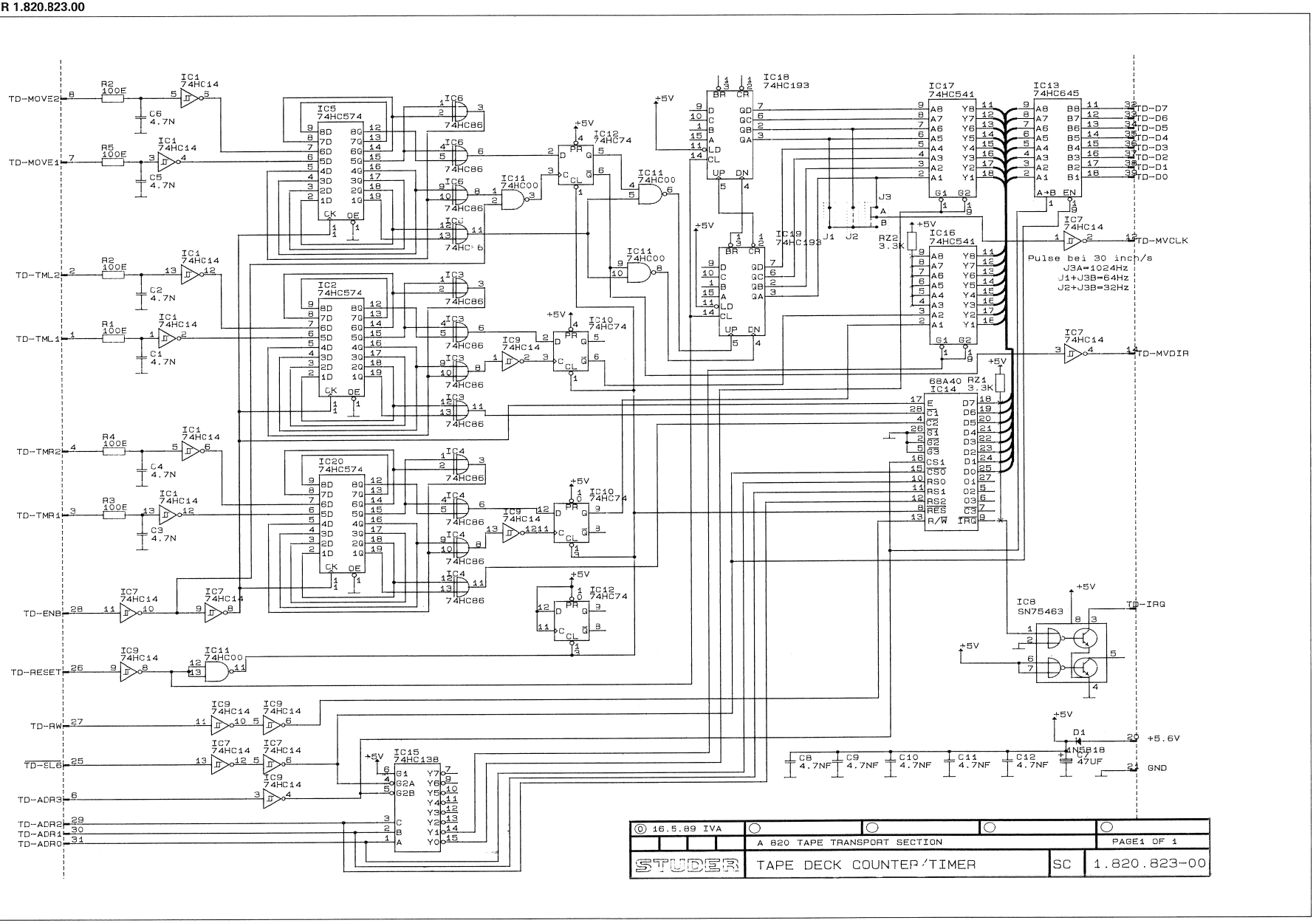

TD COUNTER TIMER 1.820.823.00

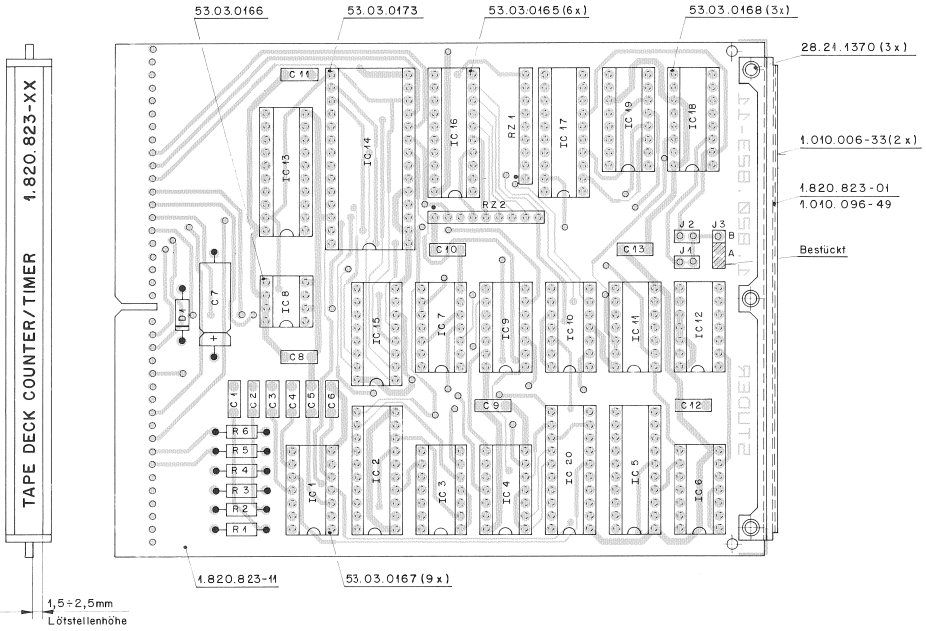

IND.	POS.NO.	PART NO.	VALUE	SPECIFICATIONS / EQUIVALENT	MANUF.
	D-----1	50.04.0512	1N 5818	1N 5819	Mot
	C-----1	59.06.0472	4,7 nF	10%, 63V, PETP	
	C-----2	59.06.0472	4,7 nF	10%, 63V, PETP	
	C-----3	59.06.0472	4,7 nF	10%, 63V, PETP	
	C-----4	59.06.0472	4,7 nF	10%, 63V, PETP	
	C-----5	59.06.0472	4,7 nF	10%, 63V, PETP	
	C-----6	59.06.0472	4,7 nF	10%, 63V, PETP	
	C-----7	59.23.3470	47 uF	16V, E1	
	C-----8	59.06.0583	68 nF	10%, 63V, PETP	
	C-----9	59.06.0583	68 nF	10%, 63V, PETP	
	C-----10	59.06.0583	68 nF	10%, 63V, PETP	
	C-----11	59.06.0583	68 nF	10%, 63V, PETP	
	C-----12	59.06.0583	68 nF	10%, 63V, PETP	
	C-----13	59.06.0583	68 nF	10%, 63V, PETP	
	IC-----1	50.17.1014	74 HC 14	= 74 HC 14 =	Mot+NS+Ph+RCA+TI+To
	IC-----2	50.17.1574	74 HC 574	= 74 HC 574 =	Mot+NS+Ph+RCA+SGS+TI+To
	IC-----3	50.17.1086	74 HC 86	= 74 HC 86 =	Mot+NS+Ph+RCA+SGS+TI+To
	IC-----4	50.17.1086	74 HC 86	= 74 HC 86 =	Mot+NS+Ph+RCA+SGS+TI+To
	IC-----5	50.17.1574	74 HC 574	= 74 HC 574 =	Mot+NS+Ph+RCA+SGS+TI+To
	IC-----6	50.17.1086	74 HC 86	= 74 HC 86 =	Mot+NS+Ph+RCA+SGS+TI+To
	IC-----7	50.17.1014	74 HC 14	= 74 HC 14 =	Mot+NS+Ph+RCA+TI+To
	IC-----8	50.05.0203	SN 75463 P	SN 75463 JG, SN 55463 JG, DS 3613 N	NS+TI
	IC-----9	50.17.1014	74 HC 14	= 74 HC 14 =	Mot+NS+Ph+RCA+TI+To
	IC-----10	50.17.1074	74 HC 74	= 74 HC 74 =	Mot+NS+Ph+RCA+SGS+TI+To
	IC-----11	50.17.1000	74 HC 00	= 74 HC 00 =	Mot+NS+Ph+RCA+SGS+TI+To
	IC-----12	50.17.1074	74 HC 74	= 74 HC 74 =	Mot+NS+Ph+RCA+SGS+TI+To
	IC-----13	50.17.1645	74 HC 645	= 74 HC 645 =	Mot+NS+Ph+RCA+SGS+TI+To
	IC-----14	50.16.0113	MC 68A 40P	HD 68A 40P	Hi+Mot
	IC-----15	50.17.1138	74 HC 138	= 74 HC 138 =	Mot+NS+Ph+RCA+SGS+TI+To
	IC-----16	50.17.1541	74 HC 541	= 74 HC 541 =	Mot+NS+Ph+RCA+SGS+TI+To
	IC-----17	50.17.1541	74 HC 541	= 74 HC 541 =	Mot+NS+Ph+RCA+SGS+TI+To
	IC-----18	50.17.1193	74 HC 193	= 74 HC 193 =	Mot+NS+Ph+RCA+SGS+TI+To
	IC-----19	50.17.1193	74 HC 193	= 74 HC 193 =	Mot+NS+Ph+RCA+SGS+TI+To
	IC-----20	50.17.1574	74 HC 574	= 74 HC 574 =	Mot+NS+Ph+RCA+SGS+TI+To

IND.	POS.NO.	PART NO.	VALUE	SPECIFICATIONS / EQUIVALENT	MANUF.
	J-----1		note used		
	J-----2		note used		
	J-----3		see note 1		
	R-----1	57.1..3101	100 Ohm	1%	
	R-----2	57.1..3101	100 Ohm	1%	
	R-----3	57.1..3101	100 Ohm	1%	
	R-----4	57.1..3101	100 Ohm	1%	
	R-----5	57.1..3101	100 Ohm	1%	
	R-----6	57.1..3101	100 Ohm	1%	
	RZ----1	57.84.4332		Network, 8 * 3.3 kOhm, 5%, single line	
	RZ----2	57.84.4332		Network, 8 * 3.3 kOhm, 5%, single line	

Note 1 - Contact pin: Studer Nr. 54.01.0020
Philips Nr. 2422 025 89303
bridge: Studer Nr. 54.01.0021
Philips Nr. 2422 024 88003

PETP=Polyesterfilm, El=Electrolytic

MANUFACTURER: Hi=Hitachi, Mot=Motorola, NS=National Semiconductors,
Ph=Philips, RCA=RCA Corporation, SGS=SGS/Ates,
TI=Texas Instruments, To=Toshiba.

ORIG 88/10/27

MOVE SENSOR PCB 1.820.770.00

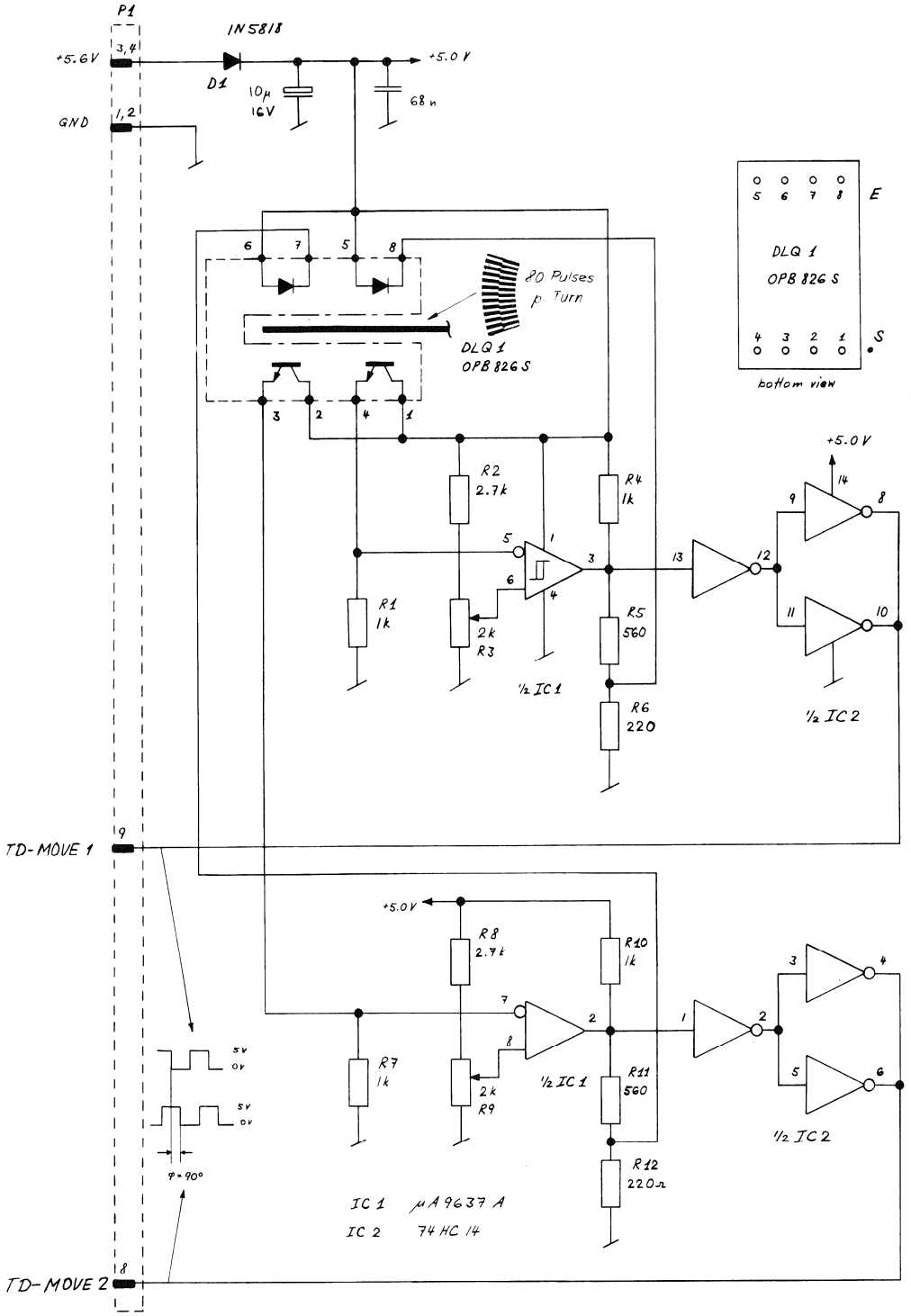

⓪ 11.12.84 A		A 820 Tape Transport Section		
STUDER	Move Sensor PCB	SC	1. 820.770.00	PAGE 1 OF 1

MOVE SENSOR PCB 1.820.770.00

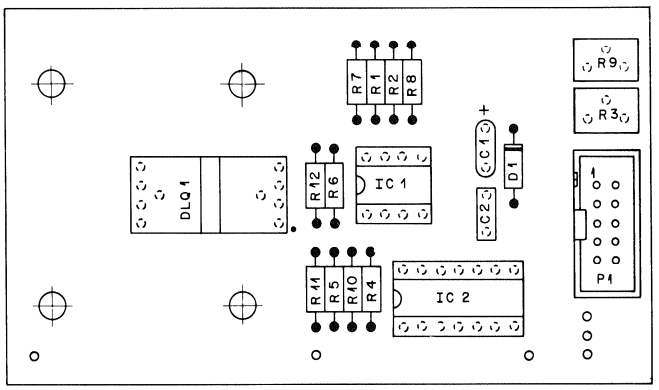

IND.	POS.NO.	PART NO.	VALUE	SPECIFICATIONS / EQUIVALENT	MANUF.
	C.....1	59.26.2100	10 uF	20%, 16V , Sal	Ph
	C.....2	59.06.0683	68 nF	10%, 63V , PETP	
	D.....1	50.04.0512	1N 5818	1N 5819	Mot
	DLQ...1	50.99.0166	OPB 826 S		Op
	IC....1	50.15.0114	uA9637ACP	9637 ATC	Fc,TI
	IC....2	50.17.1014	74 HC 14		Ph,Mot,NS,RCA,TI,To
	P.....1	54.14.2001		see note 1	
	R.....1	57.11.4102	1 kOhm	2%	
	R.....2	57.11.4272	2.7 kOhm	2%	
	R.....3	58.05.0202	2 kOhm	see note 2	
	R.....4	57.11.4102	1 kOhm	2%	
	R.....5	57.11.4561	560 Ohm	2%	
	R.....6	57.11.4221	220 Ohm	2%	
	R.....7	57.11.4102	1 kOhm	2%	
	R.....8	57.11.4272	2.7 kOhm	2%	
	R.....9	58.05.0202	2 kOhm	see note 2	
	R....10	57.11.4102	1 kOhm	2%	
	R....11	57.11.4561	560 Ohm	2%	
	R....12	57.11.4221	220 Ohm	2%	

IND. POS.NO. PART NO. VALUE SPECIFICATIONS / EQUIVALENT MANUF.

Note 1 - Connector: Yamaichi Nr. FAP-10-08/ 4
Burndy Nr. BPH 7 B 10 B00 GS

Note 2 - Potentiometer: Bourns Nr. 3296 Z - 1 - 202
Spectrol Nr. 64 Z 202 T 000

Sal=Solid aluminium

Manufacturer: Fc=Fairchild, Mot=Motorola, NS=National Semiconductors,
Op=Optron, Ph=Philips, RCA=Radio Corporation of America,
TI=Texas Instruments, To=Toshiba.

ORIG 84/12/11

BLOCK DIAGRAM
MOVE SENSOR 1.820.770.82

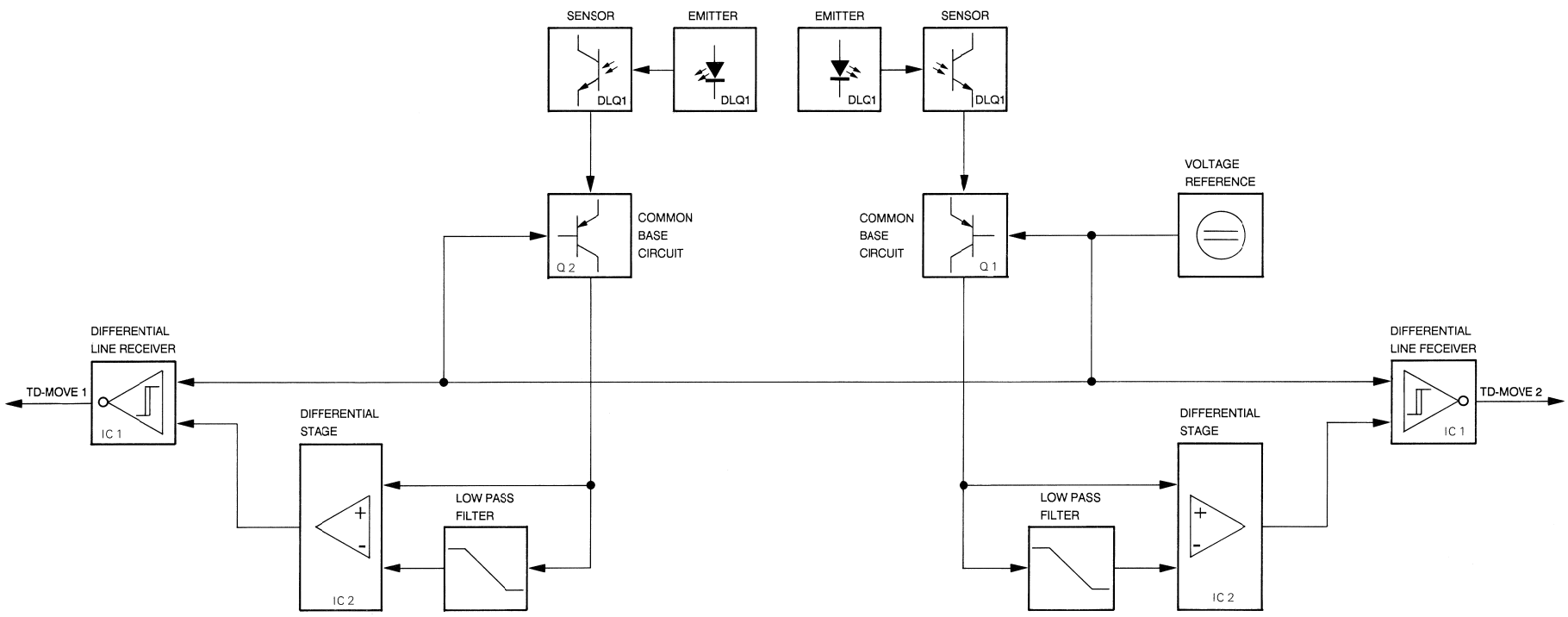

MOVE SENSOR 1.820.770.82

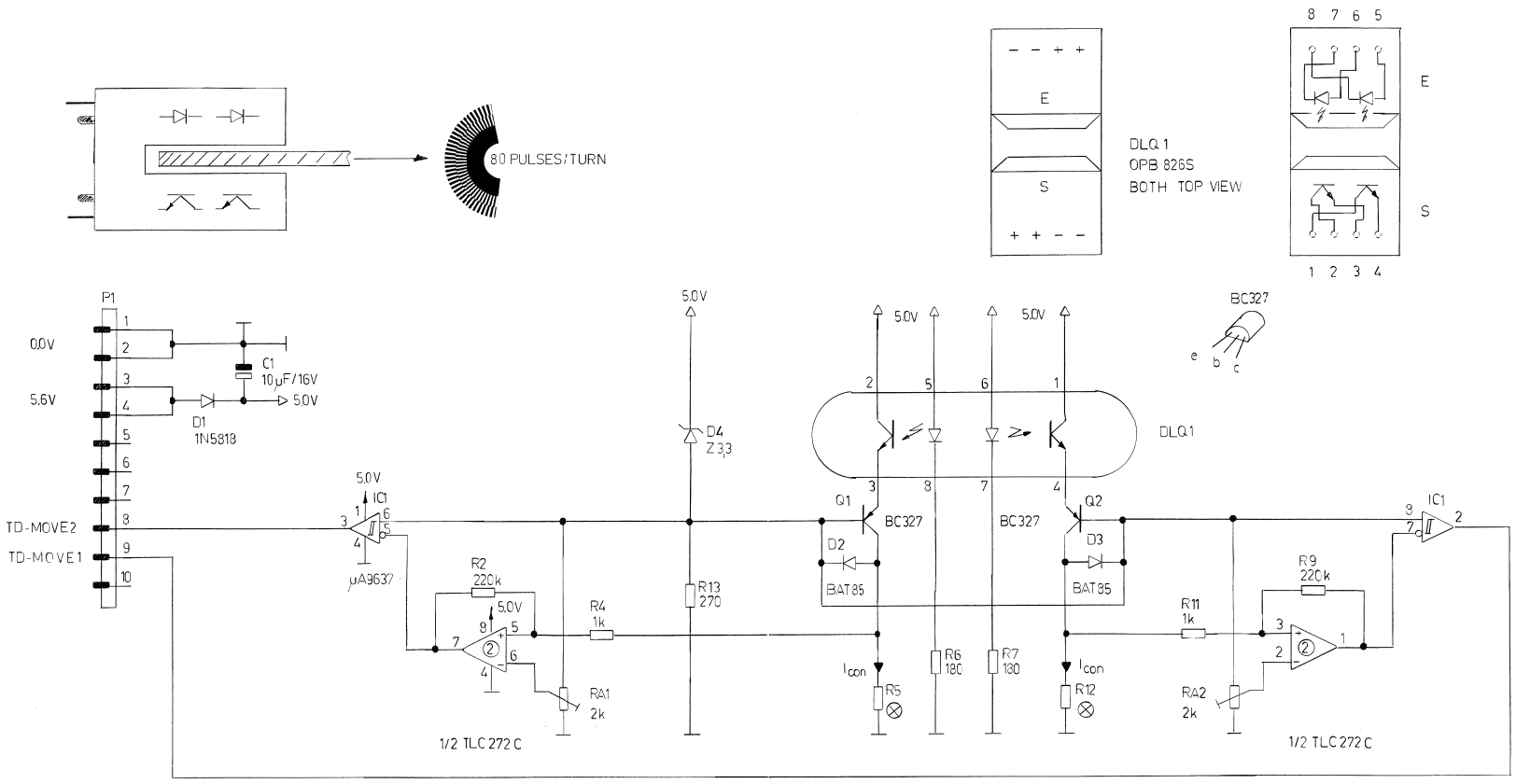

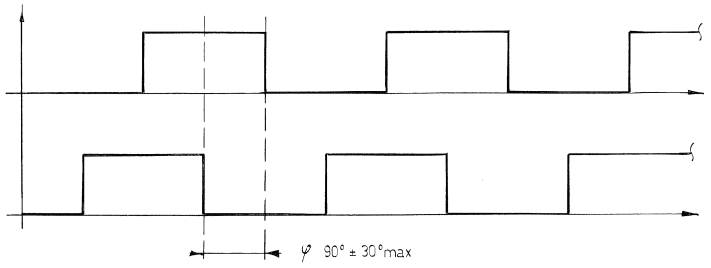

⊗ R5/R12 factory adjusted according to following table

coupling measured without tacho disk

I_{con} measurement R2/R4 replaced by digital miliamperemeter

I_{con}	250µA	360µA	520µA	720µA	1,07mA	1,55mA	2,2mA	3,1mA	4,6mA	6,5mA	10mA
R2/R4	7k5	5k1	3k6	2k4	1k6	1k2	820	560	390	270	

0 15.11.89 ZOLLER				
	A 820			PAGE 1 OF 1
STUDER	MOVE SENSOR		SC	1.820.770.82

MOVE SENSOR 1.820.770.82

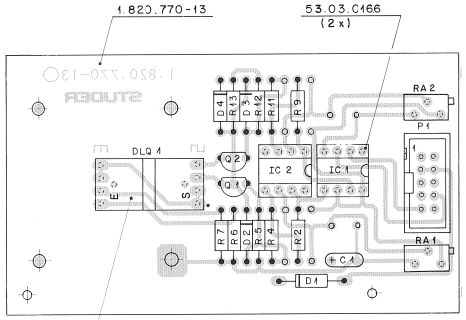

DLQ1 satt aufliegend
auf Bestückungsseite
montiert.

43.01.0108 und
Schild 1.820.770-01
aufgeklebt nach Fabrikationsmuster.

IND.	POS.NO.	PART NO.	VALUE	SPECIFICATIONS / EQUIVALENT	MANUF.
	C....1	59.26.2100	10 uF	20%, 16V, Sal	
	C....2		not used		
	C....3		not used		
	D....1	50.04.0512	1N 5818	1A 591B	Mot
	D....2	50.04.0127	BAT 42	BAT 85, 3AS 40-02,	Ph,Sie,Tho
	D....3	50.04.0127	BAT 42	BAT 85, 3AS 40-02,	Ph,Sie,Tho
	D....4	50.04.1107	3,3V Z	BZX 55-C3V3	ITT,Mot,Ph,Tf,Tho
	DLQ...1	50.99.0166	OPB 826		Op
	IC....1	50.15.0114	sA9637ACP	9637 ATC	Fc,TI
(00)	IC....2	50.05.0206	LM 358 N	LM 358 P	NS,Mot,SGS,Ti
(01)	IC....2	50.09.0122	TLC 272 C	TS 272 C¢	SGS,Ti
	P....1	54.14.2001	10 cont.	see note 1	
	Q....1	50.03.0351	BC 327-25		ITT,Ph,Sie
	Q....2	50.03.0351	BC 327-25		ITT,Ph,Sie
	R....1		not used		
	R....2	57.11.3224	220 kOhm	1%	
	R....3		not used		
	R....4	57.11.3102	1 kOhm	1%	
	R....5		factory	adjusted	
	R....6	57.11.3181	180 Ohm	1%	
	R....7	57.11.3181	180 Ohm	1%	
	R....8		not used		
	R....9	57.11.3224	220 kOhm	1%	
	R....10		not used		
	R....11	57.11.3102	1 kOhm	1%	
	R....12		factory	adjusted	
	R....13	57.11.3271	270 Ohm	1%	
	RA....1	58.05.0202	2 kOhm	10% multi turn	
	RA....2	58.05.0202	2 kOhm	10% multi turn	

IND.	POS.NO.	PART NO.	VALUE	SPECIFICATIONS / EQUIVALENT	MANUF.

(01) 11.01.90 Printout error

Note 1 - Connector 10 contacts:
Yamaichi nr. FAP-10-06-40SS
Burndy nr. BPH 9 B10 800 GS
3M nr. 7610-6002 VZ

El=Electrolytic, Sal=Solid aluminium

MANUFACTURER: Fc=Fairchild, ITT=Intermetall, Mot=Motorola, NS=National
Semiconductor, Op=Optron, Ph=Philips, SGS=SGS/Ates,
Sie=Siemens, Tf=Telefunken, Tho=Thomson, TI=Texas Instrument.

GRIG 89/11/15 (01) 90/01/11

MOTOR TACHO PCB 1.820.771.81

R

C

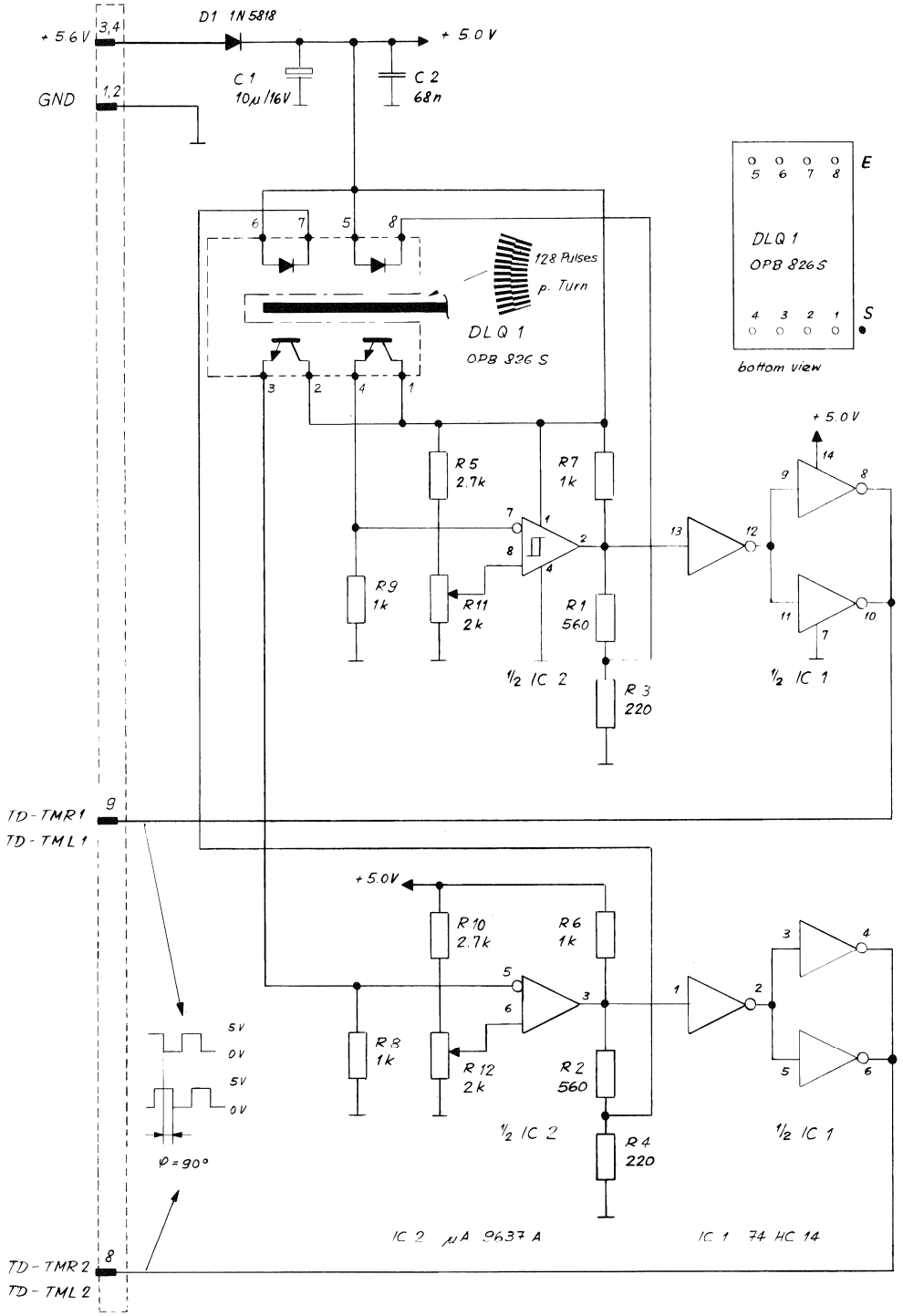

8.1.85 CK		A 820 Tape Transport Section		
STUDER	Motor Tacho PCB	SC	1.820.771.81	PAGE 1 OF 1

MOTOR TACHO PCB 1.820.771.81

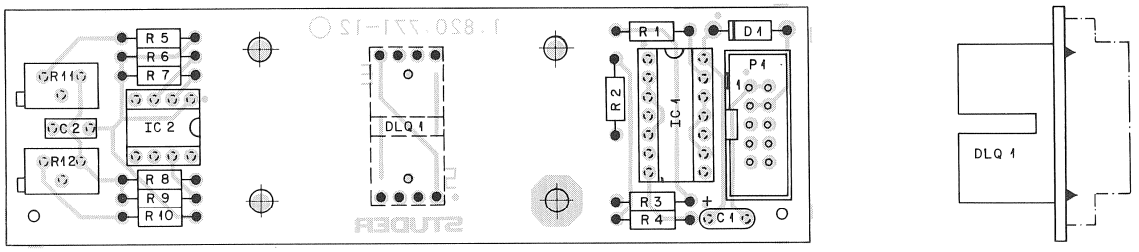

IND.	POS.NO.	PART NO.	VALUE	SPECIFICATIONS / EQUIVALENT	MANUF.
	C.....1	59.26.2100	10 uF	20%, 16V , Sal	Ph
	C.....2	59.06.0683	68 nF	10%, 63V , PETP	
	D.....1	50.04.0512	1N 5818	1N 5819	Mot
	DLQ....1	50.99.0166	OPB 826 S		Op
	IC.....1	50.17.1014	74 HC 14		Ph,Mot,NS,RCA,TI,To
	IC.....2	50.15.0114	uA9637ACP	9637ATC	Fc,TI
	P.....1	54.14.2001		see note 1	
	R.....1	57.11.4561	560 Ohm	2%	
	R.....2	57.11.4561	560 Ohm	2%	
	R.....3	57.11.4221	220 Ohm	2%	
	R.....4	57.11.4221	220 Ohm	2%	
	R.....5	57.11.4272	2.7 kOhm	2%	
	R.....6	57.11.4102	1.0 kOhm	2%	
	R.....7	57.11.4102	1.0 kOhm	2%	
	R.....8	57.11.4102	1.0 kOhm	2%	
	R.....9	57.11.4102	1.0 kOhm	2%	
	R....10	57.11.4272	2.7 kOhm	2%	
	R....11	58.05.0202	2 kOhm	see note 2	
	R....12	58.05.0202	2 kOhm	see note 2	

IND.	POS.NO.	PART NO.	VALUE	SPECIFICATIONS / EQUIVALENT	MANUF.

Note 1 - Connector: Yamaichi Nr. FAP-10-08/ 4
Burndy Nr. BPH 7 B 10 800 GS

Note 2 - Potentiometer: Bourns Nr. 3296 Z - 1 - 202
Spectrol Nr. 64 Z 202 T 000

Sal=Solid aluminium

Manufacturer: Fc=Fairchild, Mot=Motorola, NS=National Semiconductors,
Op=Optron, Ph=Philips, RCA=Radio Corporation of America,
TI=Texas Instruments, To=Toshiba.

ORIG 85/01/08

MOTOR TACHO 1.820.771.83

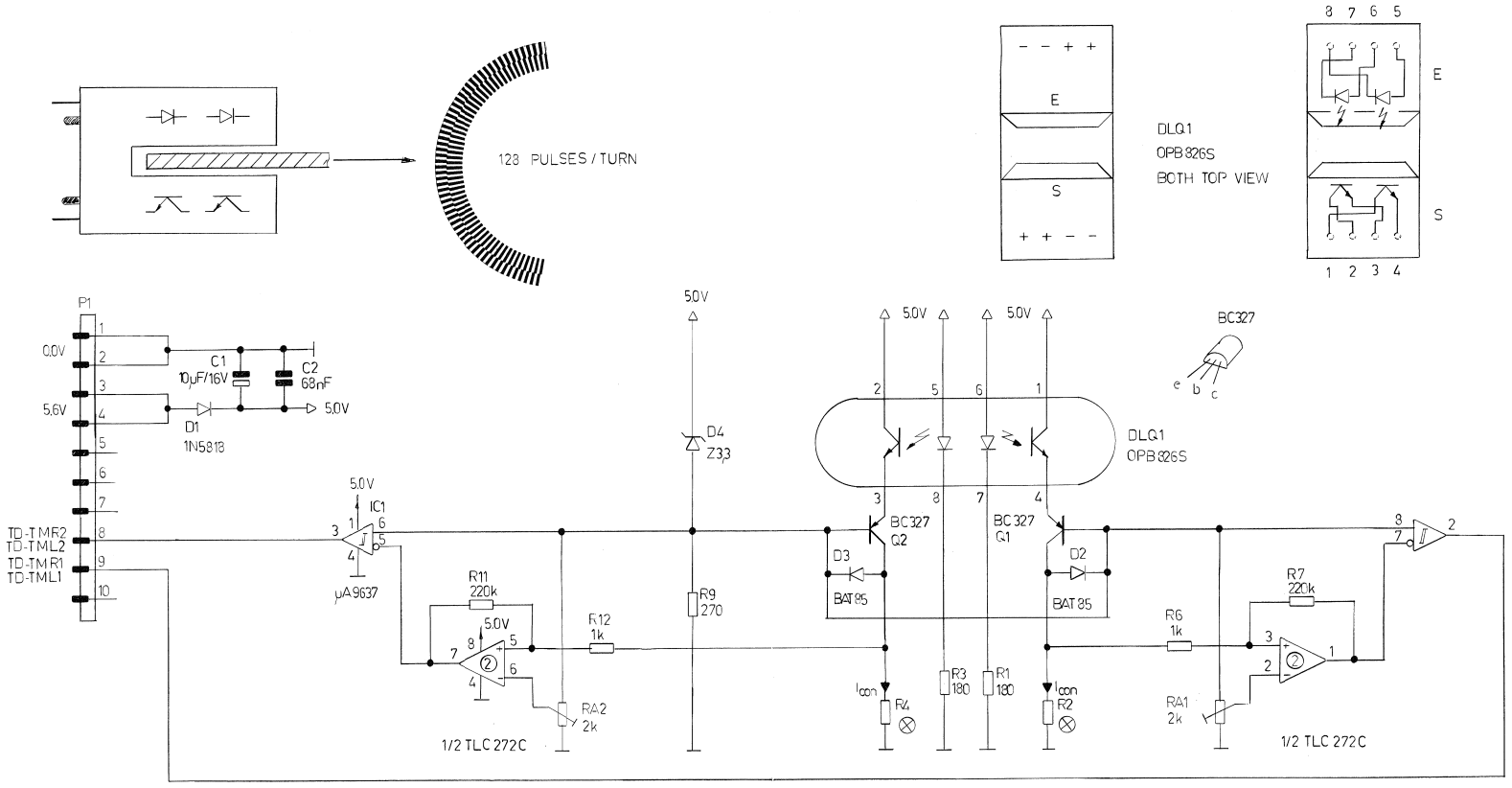

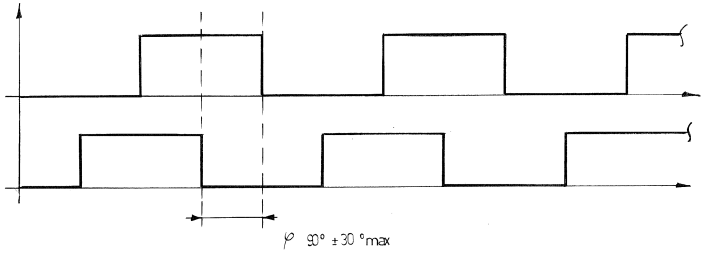

⊗ R2 / R4 factory adjusted according to following table
coupling measured without tacho disk
I_{con} measurement R2/R4 replaced by digital miliamperemeter

I_{con}	250µA	360µA	520µA	720µA	1,07mA	1,55mA	2,2mA	3,1mA	4,6mA	6,5mA	10mA
R2/R4	7k5	5k1	3k6	2k4	1k6	1k2	820	560	390	270	

⓪ 15.11.89 ZOLLER				
	A 820			PAGE 1 OF 1
STUDER	MOTOR TACHO		SC	1.820.771.83

MOTOR TACHO 1.820.771.83

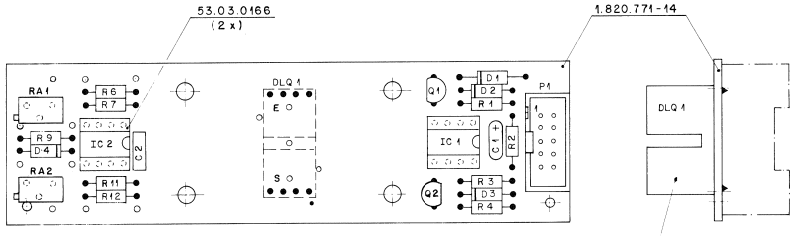

IND.	POS.NO.	PART NO.	VALUE	SPECIFICATIONS / EQUIVALENT	MANUF.
	C.....1	59.26.2100	10 uF	20%, 16V, Sal	
	C.....2	59.06.0683	68 nF	10%, 63V, FETF	
	C.....3		not used		
	C.....4		not used		
	D.....1	50.04.0512	1N 5818	1N 5918	Mot
	D.....2	50.04.0127	BAT 42	BAT 85, BAS 40-02,	Ph,Sie,Tho
	D.....3	50.04.0127	BAT 42	BAT 85, BAS 40-02,	Ph,Sie,Tho
	D.....4	50.04.1107	3,3V Z	BZX 55-C3V3	ITT,Mot,Ph,Tf,Tho
	DLQ...1	50.99.0166	OPB 826		Op
	IC....1	50.15.0114	uA9637ACP	9637 ATC	Fc,TI
(00)	IC....2	50.05.0286	LM 358 N	LM 358 P	NS,Mot,SGS,TI
(01)	IC....2	50.09.0122	TLC 272 C	TS 272 CN	SGS,TI
	P.....1	54.14.2001	10 cont.	see note 1	
	Q.....1	50.03.0351	BC 327-25		ITT,Ph,Sie
	Q.....2	50.03.0351	BC 327-25		ITT,Ph,Sie
	R.....1	57.11.3181	180 Ohm	1%	
	R.....2		factory	adjusted	
	R.....3	57.11.3181	180 Ohm	1%	
	R.....4		factory	adjusted	
	R.....5		not used	1%	
	R.....6	57.11.3102	1 kOhm	1%	
	R.....7	57.11.3224	220 kOhm	1%	
	R.....8		not used		
	R.....9	57.11.3271	270 Ohm	1%	
	R....10		not used		
	R....11	57.11.3224	220 kOhm	1%	
	R....12	57.11.3102	1 kOhm	1%	
	R....13		not used		
	RA....1	58.05.0202	2 kOhm	10%, multi turn	
	RA....2	58.05.0202	2 kOhm	10%, multi turn	

(01) 11.01.90 Printout error

Note 1 - Connector 10 contacts:
Yamaichi nr. FAP-10-08-40SS
Burndy nr. BPH 9 B10 B00 GS
3M nr. 7610-6002 VZ

El=Electrolytic, Sal=Solid aluminium

MANUFACTURER: Fc=Fairchild, ITT=Intersetall, Mot=Motorola, NS=National Semiconductor, Op=Optron, Ph=Philips, SGS=SGS/Ates, Sie=Siemens, Tf=Telefunken, Tho=Thomson, TI=Texas Instrument.

GRIG 89/11/15 (01) 90/01/11

BLOCK DIAGRAM
PINCH ROLLER GATE 1.820.831

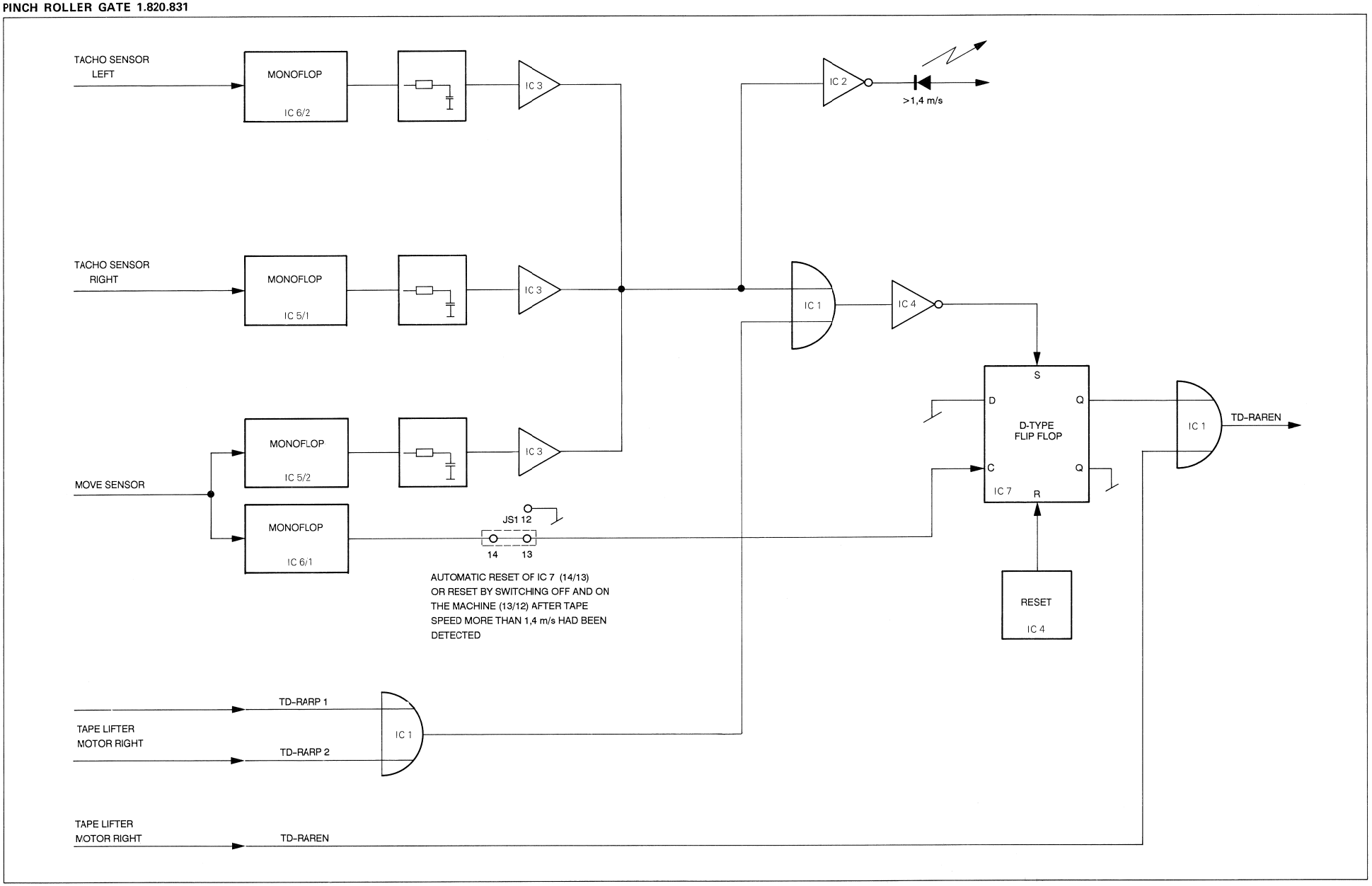

PINCH ROLLER GATE 1.820.831.81

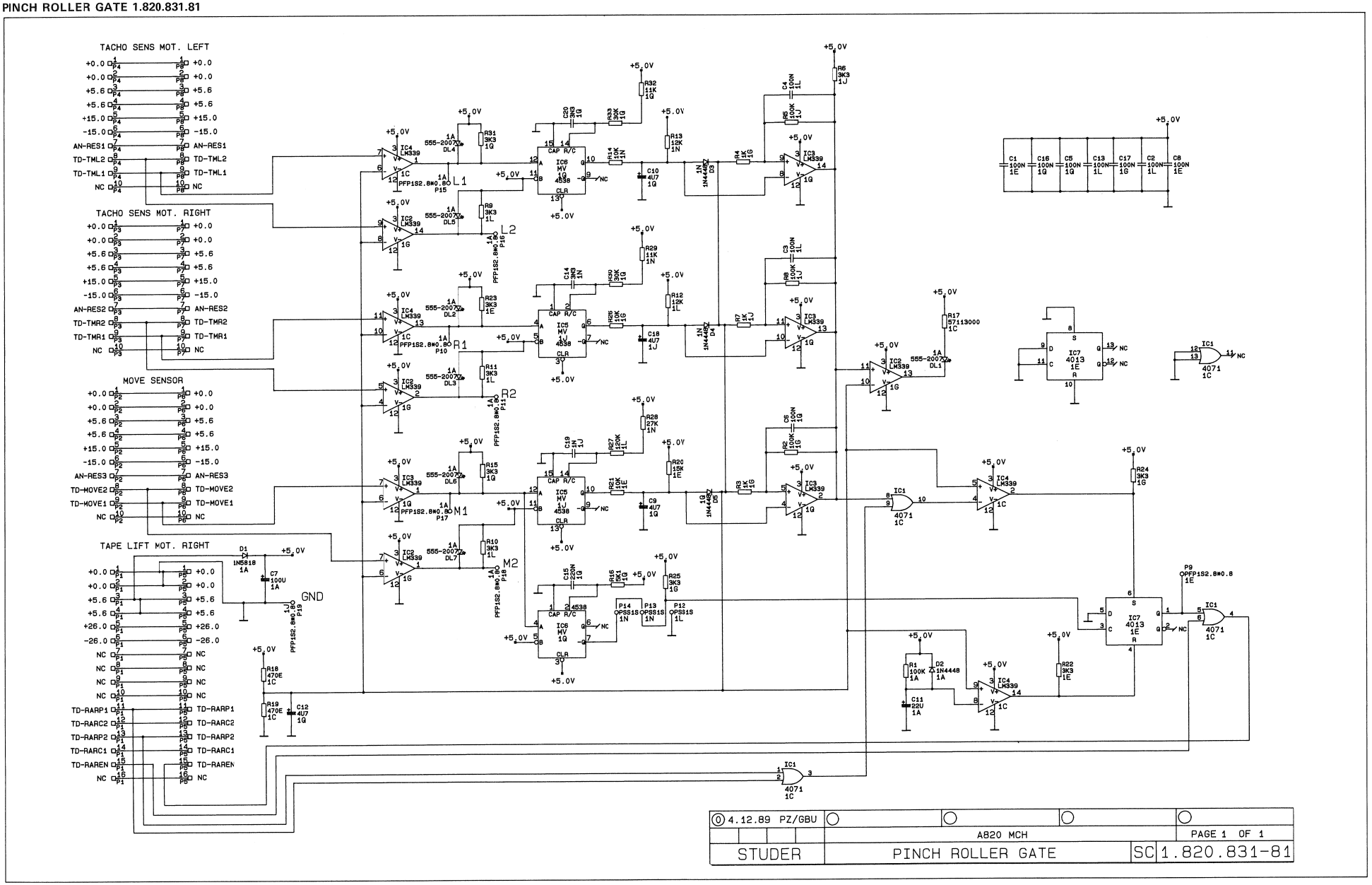

PINCH ROLLER GATE 1.820.831.81

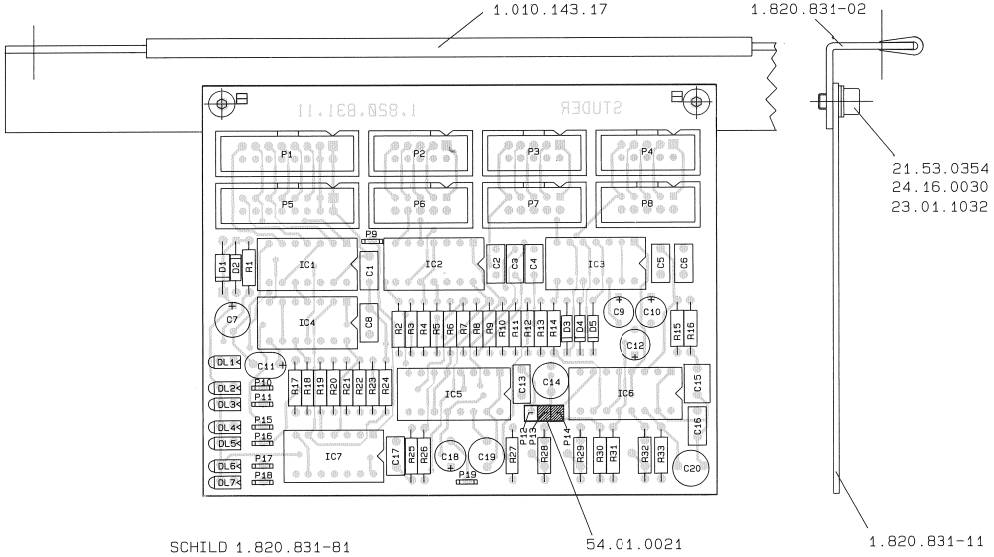

SCHILD 1.820.831-81
AUFGEKLEBT NACH FABRIKATIONSMUSTER

IND.	POS.NO.	PART NO.	VALUE	SPECIFICATIONS / EQUIVALENT	MANUF.
	IC....2	50.11.0104	LM 339	TDB 0139 DP	Mot,NS,SGS
	IC....3	50.11.0104	LM 339	TDB 0139 DP	Mot,NS,SGS
	IC....4	50.11.0104	LM 339	TDB 0139 DP	Mot,NS,SGS
	IC....5	50.07.1538	MC1453BBCP	HEF 4538 BP	Mot,Ph
	IC....6	50.07.1538	MC1453BBCP	HEF 4538 BP	Mot,Ph
	IC....7	50.07.0013	MC14013BCP	HEF 4013 BP, CD 4013 BE,	Mot,Ph,RCA,SGS
	P.....1	54.14.2002	16 cont.	see note 1	
	P.....2	54.14.2001	10 cont.	see note 2	
	P.....3	54.14.2001	10 cont.	see note 2	
	P.....4	54.14.2001	10 cont.	see note 2	
	P.....5	54.14.2002	16 cont.	see note 1	
	P.....6	54.14.2001	10 cont.	see note 2	
	P.....7	54.14.2001	10 cont.	see note 2	
	P.....8	54.14.2001	10 cont.	see note 2	
	P.....9	54.02.0320	Flat-pin	Testpoint	
	P....10	54.02.0320	Flat-pin	Testpoint	
	P....11	54.02.0320	Flat-pin	Testpoint	
	P....12	54.01.0020	Pin-strip	see note 3	
	P....13	54.01.0020	Pin-strip	see note 3	
	P....14	54.01.0020	Pin-strip	see note 3	
	P....15	54.02.0320	Flat-pin	Testpoint	
	P....16	54.02.0320	Flat-pin	Testpoint	
	P....17	54.02.0320	Flat-pin	Testpoint	
	P....18	54.02.0320	Flat-pin	Testpoint	
	P....19	54.02.0320	Flat-pin	Testpoint	
	R.....1	57.11.3104	100 kOhm	2%	
	R.....2	57.11.3104	100 kOhm	2%	
	R.....3	57.11.3102	1 kOhm	2%	
	R.....4	57.11.3102	1 kOhm	2%	
	R.....5	57.11.3104	100 kOhm	2%	
	R.....6	57.11.3332	3.3 kOhm	2%	
	R.....7	57.11.3102	1 kOhm	2%	
	R.....8	57.11.3104	100 kOhm	2%	
	R.....9	57.11.3332	3.3 kOhm	2%	
	R....10	57.11.3332	3.3 kOhm	2%	

IND.	POS.NO.	PART NO.	VALUE	SPECIFICATIONS / EQUIVALENT	MANUF.
	R....11	57.11.3332	3.3 kOhm	2%	
	R....12	57.11.3123	12 kOhm	1%	
	R....13	57.11.3123	12 kOhm	1%	
	R....14	57.11.3103	10 kOhm	1%	
	R....15	57.11.3332	3.3 kOhm	2%	
	R....16	57.11.3512	5.1 kOhm	2%	
	R....17	57.11.3000	0 Ohm		
	R....18	57.11.3471	470 Ohm	1%	
	R....19	57.11.3471	470 Ohm	1%	
	R....20	57.11.3153	15 kOhm	1%	
	R....21	57.11.3103	10 kOhm	1%	
	R....22	57.11.3332	3.3 kOhm	2%	
	R....23	57.11.3332	3.3 kOhm	2%	
	R....24	57.11.3332	3.3 kOhm	2%	
	R....25	57.11.3332	3.3 kOhm	2%	
	R....26	57.11.3103	10 kOhm	1%	
	R....27	57.11.3124	120 kOhm	1%	
	R....28	57.11.3273	27 kOhm	1%	
	R....29	57.11.3113	11 kOhm	1%	
	R....30	57.11.3303	30 kOhm	1%	
	R....31	57.11.3332	3.3 kOhm	2%	
	R....32	57.11.3113	11 kOhm	1%	
	R....33	57.11.3303	30 kOhm	1%	

IND.	POS.NO.	PART NO.	VALUE	SPECIFICATIONS / EQUIVALENT	MANUF.
	C.....1	59.06.0104	100 nF	10%, 63V, PETP	
	C.....2	59.06.0104	100 nF	10%, 63V, PETP	
	C.....3		not used		
	C.....4		not used		
	C.....5	59.06.0104	100 nF	10%, 63V, PETP	
	C.....6		not used		
	C.....7	59.22.3101	100 uF	20%, 25V, El	
	C.....8	59.06.0104	100 nF	10%, 63V, PETP	
	C.....9	59.22.8479	4.7 uF	20%, 63V, El	
	C....10	59.22.8479	4.7 uF	20%, 63V, El	
(00)	C....11	59.06.0224	220 nF	10%, 63V, PETP	
(01)	C....11	59.26.1220	22 uF	20%, 10V, Sal	
	C....12	59.22.8479	4.7 uF	20%, 63V, El	
	C....13	59.06.0104	100 nF	10%, 63V, PETP	
	C....14	59.05.1332	3.3 nF	1%,160V, PP	
	C....15	59.06.0224	220 nF	10%, 63V, PETP	
	C....16	59.06.0104	100 nF	10%, 63V, PETP	
	C....17	59.06.0104	100 nF	10%, 63V, PETP	
	C....18	59.22.8479	4.7 uF	20%, 63V, El	
	C....19	59.05.1102	1 nF	1%,160V, PP	
	C....20	59.05.1332	3.3 nF	1%,160V, PP	
	D.....1	50.04.0512	1N 5818	1N 5819,	Mot
	D.....2	50.04.0125	1N 4448		Fc,ITT,Ph,Sem,Tf
	D.....3	50.04.0125	1N 4448		Fc,ITT,Ph,Sem,Tf
	D.....4	50.04.0125	1N 4448		Fc,ITT,Ph,Sem,Tf
	D.....5	50.04.0125	1N 4448		Fc,ITT,Ph,Sem,Tf
	DL....1	50.04.2107	555-2007	LED, red, dif,	D:
	DL....2	50.04.2107	555-2007	LED, red, dif,	D:
	DL....3	50.04.2107	555-2007	LED, red, dif,	D:
	DL....4	50.04.2107	555-2007	LED, red, dif,	D:
	DL....5	50.04.2107	555-2007	LED, red, dif,	D:
	DL....6	50.04.2107	555-2007	LED, red, dif,	D:
	DL....7	50.04.2107	555-2007	LED, red, dif,	D:
	IC....1	50.07.0022	MC14071BCP	CD 4071 BE, HCF 4071 BE	Mot,RCA,SGS

IND.	POS.NO.	PART NO.	VALUE	SPECIFICATIONS / EQUIVALENT	MANUF.

Note 1 - Connector:
16 contacts, Yamaichi nr. FAP-16-08-40 SS
Burndy nr. BPH 9 B 16 B 00 GS
3M nr. 7616-6002 VZ
Panduit nr. 057.016.113

Note 2 - Connector:
10 contacts, Yamaichi nr. FAP-10-08-40 SS
Burndy nr. BPH 9 B 10 B 00 GS
3M nr. 7610-6002 VZ
Panduit nr. 057.010.113

Note 3 - Jumper switch:
contact pin, Berg nr. 77 311-102-36
Philips nr. 2422 062 43241
Bridge, Studer nr. 54.01.0021
Berg nr. 65 474-001
Philips nr. 2422 024 88003

El=Electrolytic, PETP=Polyesterfilm, PP=Polypropylene,
Sal=Solid Aluminium.

MANUFACTURER: Di=Dialco, Fc=Fairchild, ITT=Intermetall, Mot=Motorola,
NS=National Semiconductors, Ph=Philips, RCA=RCA Corporation,
Sem=Semicosem, SGS=SGS/Ates, Sie=Siemens, Tf=Telefunken.

ORIG 89/12/04

BLOCK DIAGRAM
SPOOLING MOTOR CONTROL 1.820.822

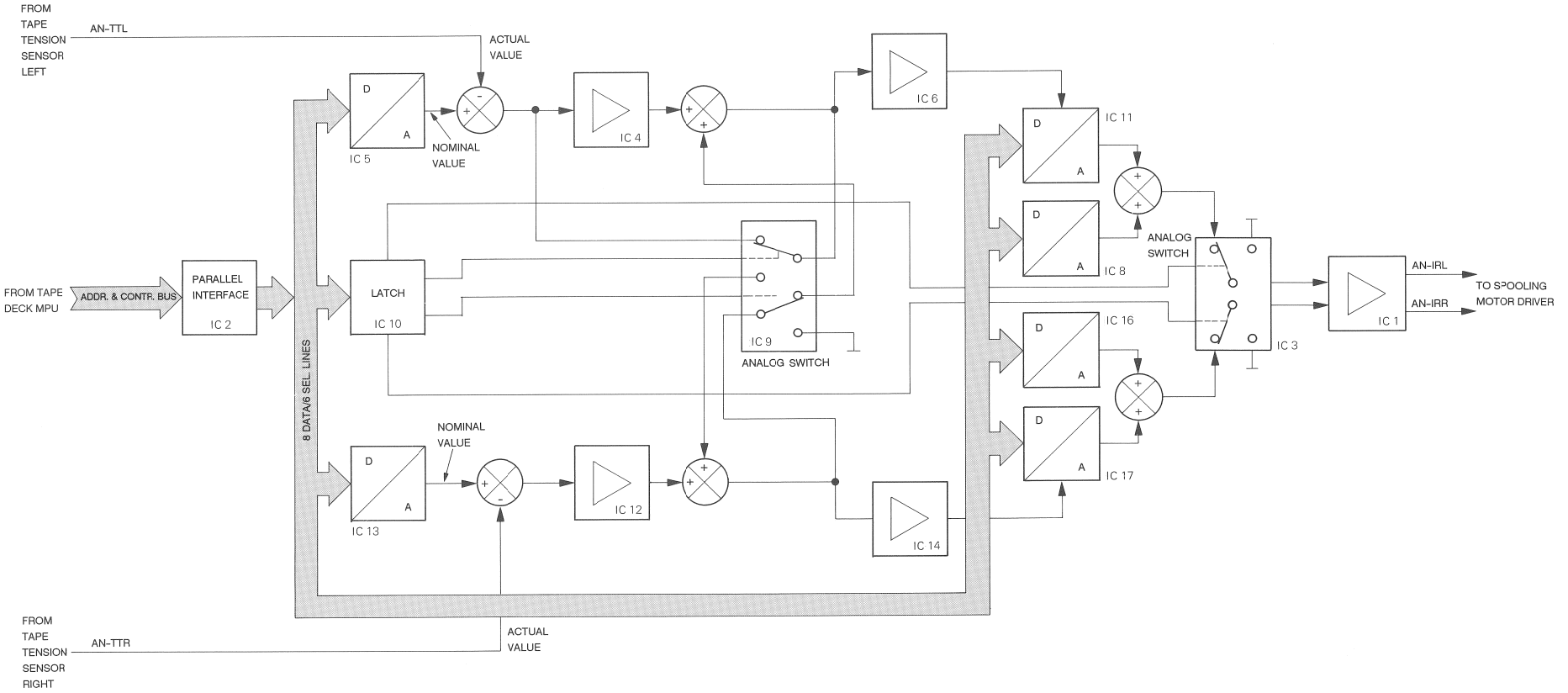

SPOOLING MOTOR CONTROL 1.820.822.00

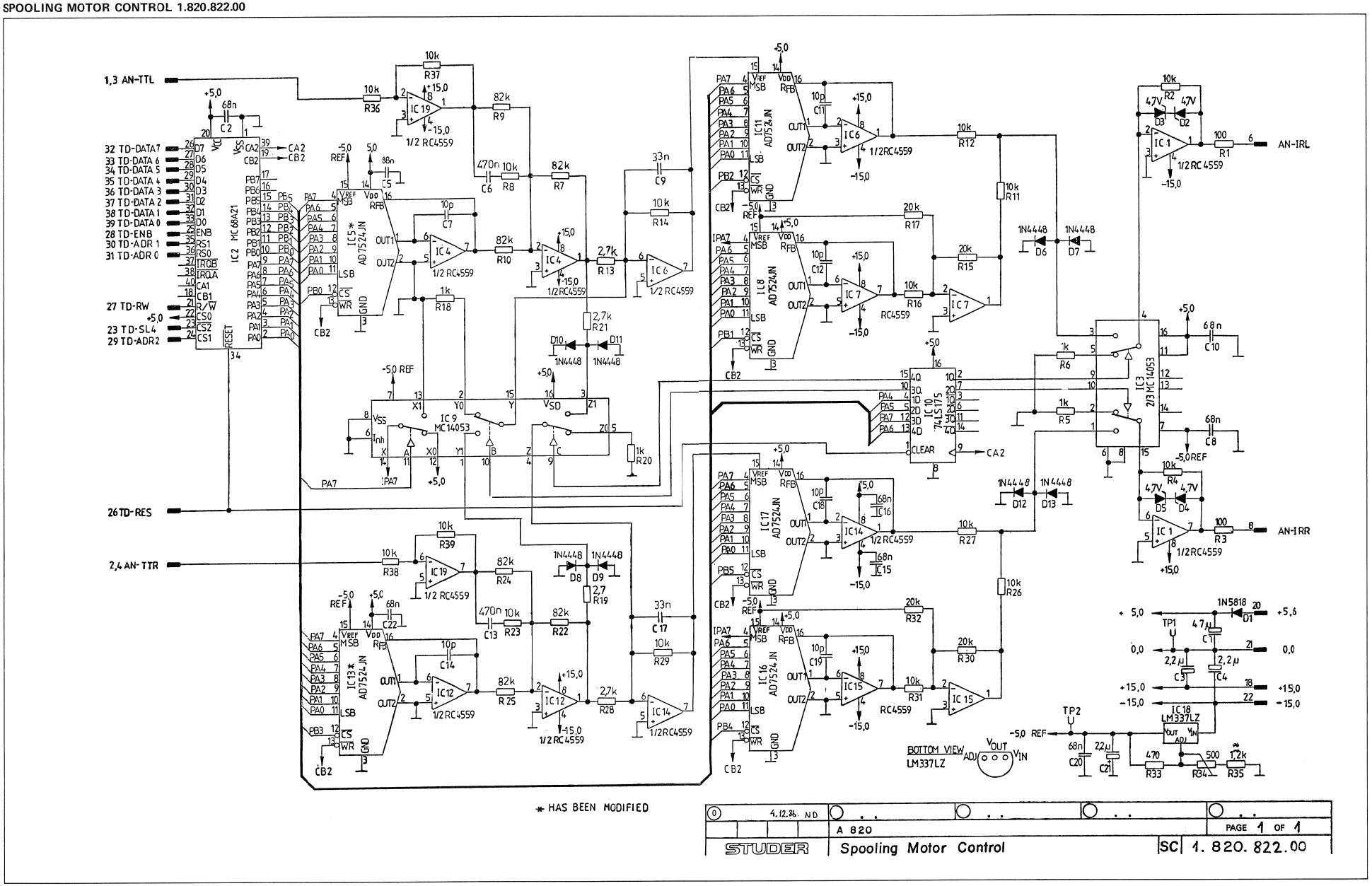

SPOOLING MOTOR CONTROL 1.820.822.00

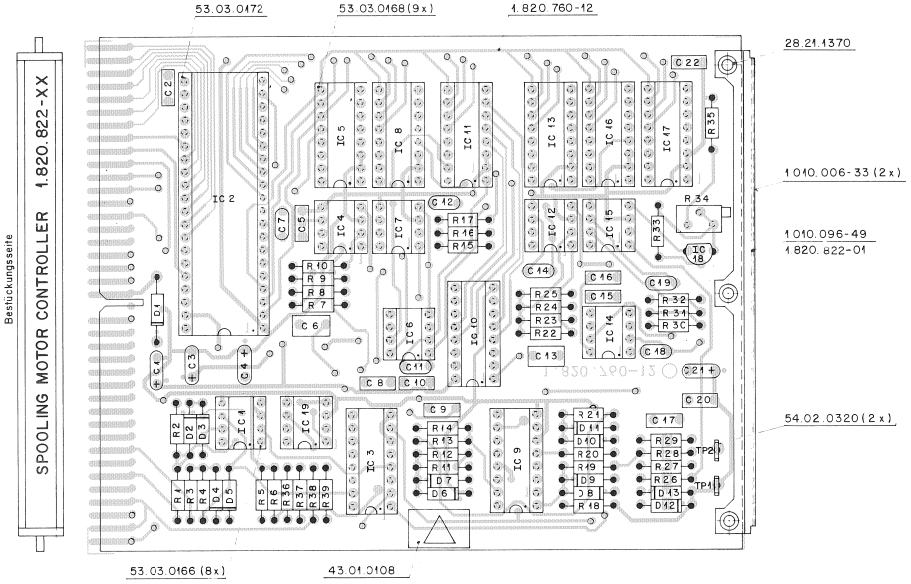

IND.	POS.NO.	PART NO.	VALUE	SPECIFICATIONS / EQUIVALENT	MANUF.
	IC....1	50.09.0107	RC 4559 NB	uPC 4559, slew rate min. 1.5 V/us	NEC,Ra
	IC....2	50.16.0106	MC68 A 21P	S68 A 21P, P68 A 21P	AMI,Fc,Mot
	IC....3	50.07.0015	MC14053BCP	... 4053 ...	Mot,NS,Ph,RCA,To
	IC....4	50.09.0107	RC 4559 NB	uPC 4559, slew rate min. 1.5 V/us	NEC,Ra
	IC....5	50.07.0002	AD 7524 JN	MP 7524 JN	ADI,MPS
	IC....6	50.09.0107	RC 4559 NB	uPC 4559, slew rate min. 1.5 V/us	NEC,Ra
	IC....7	50.09.0107	RC 4559 NB	uPC 4559, slew rate min. 1.5 V/us	NEC,Ra
	IC....8	50.07.0002	AD 7524 JN	MP 7524 JN	ADI,MPS
	IC....9	50.07.0015	MC14053BCP	... 4053 ...	Mot,NS,Ph,RCA,To
	IC....10	50.17.1175	CD74HC175E	.. 74 HC 175 . Mot,NS,Ph,RCA,SGS,Tho,TI,To	
	IC....11	50.07.0002	AD 7524 JN	MP 7524 JN	ADI,MPS
	IC....12	50.09.0107	RC 4559 NB	uPC 4559, slew rate min. 1.5 V/us	NEC,Ra
	IC....13	50.07.0002	AD 7524 JN	MP 7524 JN	ADI,MPS
	IC....14	50.09.0107	RC 4559 NB	uPC 4559, slew rate min. 1.5 V/us	NEC,Ra
	IC....15	50.09.0107	RC 4559 NB	uPC 4559, slew rate min. 1.5 V/us	NEC,Ra
	IC....16	50.07.0002	AD 7524 JN	MP 7524 JN	ADI,MPS
	IC....17	50.07.0002	AD 7524 JN	MP 7524 JN	ADI,MPS
	IC....18	50.10.0109	LM 337 LZ		NS
	IC....19	50.09.0107	RC 4559 NB	uPC 4559, slew rate min. 1.5 V/us	NEC,Ra
	TP....1	54.02.0320		Test point	
	TP....2	54.02.0320		Test point	
	R.....1	57.11.3101	100 Ohm	1%	
	R.....2	57.11.3103	10 kOhm	1%	
	R.....3	57.11.3101	100 Ohm	1%	
	R.....4	57.11.3103	10 kOhm	1%	
	R.....5	57.11.3102	1 kOhm	1%	
	R.....6	57.11.3102	1 kOhm	1%	
	R.....7	57.11.3823	82 kOhm	1%	
	R.....8	57.11.3103	10 kOhm	1%	
	R.....9	57.11.3823	82 kOhm	1%	
	R....10	57.11.3823	82 kOhm	1%	
	R....11	57.11.3103	10 kOhm	1%	
	R....12	57.11.3103	10 kOhm	1%	
	R....13	57.11.3272	2.7 kOhm	1%	
	R....14	57.11.3103	10 kOhm	1%	

IND.	POS.NO.	PART NO.	VALUE	SPECIFICATIONS / EQUIVALENT	MANUF.
	R....15	57.11.3203	20 kOhm	1%	
	R....16	57.11.3103	10 kOhm	1%	
	R....17	57.11.3203	20 kOhm	1%	
	R....18	57.11.3102	1 kOhm	1%	
	R....19	57.11.3272	2.7 kOhm	1%	
	R....20	57.11.3102	1 kOhm	1%	
	R....21	57.11.3272	2.7 kOhm	1%	
	R....22	57.11.3823	82 kOhm	1%	
	R....23	57.11.3103	10 kOhm	1%	
	R....24	57.11.3823	82 kOhm	1%	
	R....25	57.11.3823	82 kOhm	1%	
	R....26	57.11.3103	10 kOhm	1%	
	R....27	57.11.3103	10 kOhm	1%	
	R....28	57.11.3272	2.7 kOhm	1%	
	R....29	57.11.3103	10 kOhm	1%	
	R....30	57.11.3203	20 kOhm	1%	
	R....31	57.11.3103	10 kOhm	1%	
	R....32	57.11.3203	20 kOhm	1%	
	R....33	57.11.3471	470 Ohm	1%	
	R....34	58.05.0501	500 Ohm	see note 1	
	R....35	57.11.3122	1.2 kOhm	1%	
	R....36	57.11.3103	10 kOhm	1%	
	R....37	57.11.3103	10 kOhm	1%	
	R....38	57.11.3103	10 kOhm	1%	
	R....39	57.11.3103	10 kOhm	1%	

IND.	POS.NO.	PART NO.	VALUE	SPECIFICATIONS / EQUIVALENT	MANUF.
	C.....1	59.26.0470	47 uF	6.3V, Sal	
	C.....2	59.06.0683	68 nF		
	C.....3	59.26.5229	2.2 uF	25V, Sal	
	C.....4	59.26.5229	2.2 uF	25V, Sal	
	C.....5	59.06.0683	68 nF		
	C.....6	59.06.0474	470 nF	10%	
	C.....7	59.24.1100	10 pF	Ce	
	C.....8	59.06.0683	68 nF		
	C.....9	59.06.0333	33 nF	10%	
	C....10	59.06.0683	68 nF		
	C....11	59.24.1100	10 pF	Ce	
	C....12	59.24.1100	10 pF	Ce	
	C....13	59.06.0474	470 nF	10%	
	C....14	59.24.1100	10 pF	Ce	
	C....15	59.06.0683	68 nF		
	C....16	59.06.0683	68 nF		
	C....17	59.06.0333	33 nF	10%	
	C....18	59.24.1100	10 pF	Ce	
	C....19	59.24.1100	10 pF	Ce	
	C....20	59.06.0683	68 nF		
	C....21	59.26.5229	2.2 uF	25V, Sal	
	C....22	59.06.0683	68 nF		
	D.....1	50.04.0512	1N 5818	1N 5819	Mot
	D.....2	50.04.1123	4.7 V, Z	BZX83C 4V7, BZX55C 4V7, ZPD 4.7	ITT,Ses
	D.....3	50.04.1123	4.7 V, Z	BZX83C 4V7, BZX55C 4V7, ZPD 4.7	ITT,Ses
	D.....4	50.04.1123	4.7 V, Z	BZX83C 4V7, BZX55C 4V7, ZPD 4.7	ITT,Ses
	D.....5	50.04.1123	4.7 V, Z	BZX83C 4V7, BZX55C 4V7, ZPD 4.7	ITT,Ses
	D.....6	50.04.0125	1N 4448		
	D.....7	50.04.0125	1N 4448		
	D.....8	50.04.0125	1N 4448		
	D.....9	50.04.0125	1N 4448		
	D....10	50.04.0125	1N 4448		
	D....11	50.04.0125	1N 4448		
	D....12	50.04.0125	1N 4448		
	D....13	50.04.0125	1N 4448		

Note 1 - Potentiometer 500 Ohm

Bourns nr.	3296 Z - 1 - 501
Centelec nr.	183 XZ 501
Spectrol nr.	64 Z 501 T 000
Murata nr.	POT 3105 Z - 1 - 501

Ce=Ceramic, Sal=Solid aluminium

MANUFACTURER: ADI=Analog Devices Inc., AMI=American Microsystem Inc.,
Fc=Fairchild, Mot=Motorola, MPS=Micropower Semicond.,
NEC=Nippon Electric Corp., NS=National Semiconductors,
Ph=Philips, Ra=Raytheon, RCA=RCA Corp. of America,
Sig=Signetics, TI=Texas Instruments

ORIG 89/03/23

TAPE TENSION SENSOR PCB 1.820.772.81

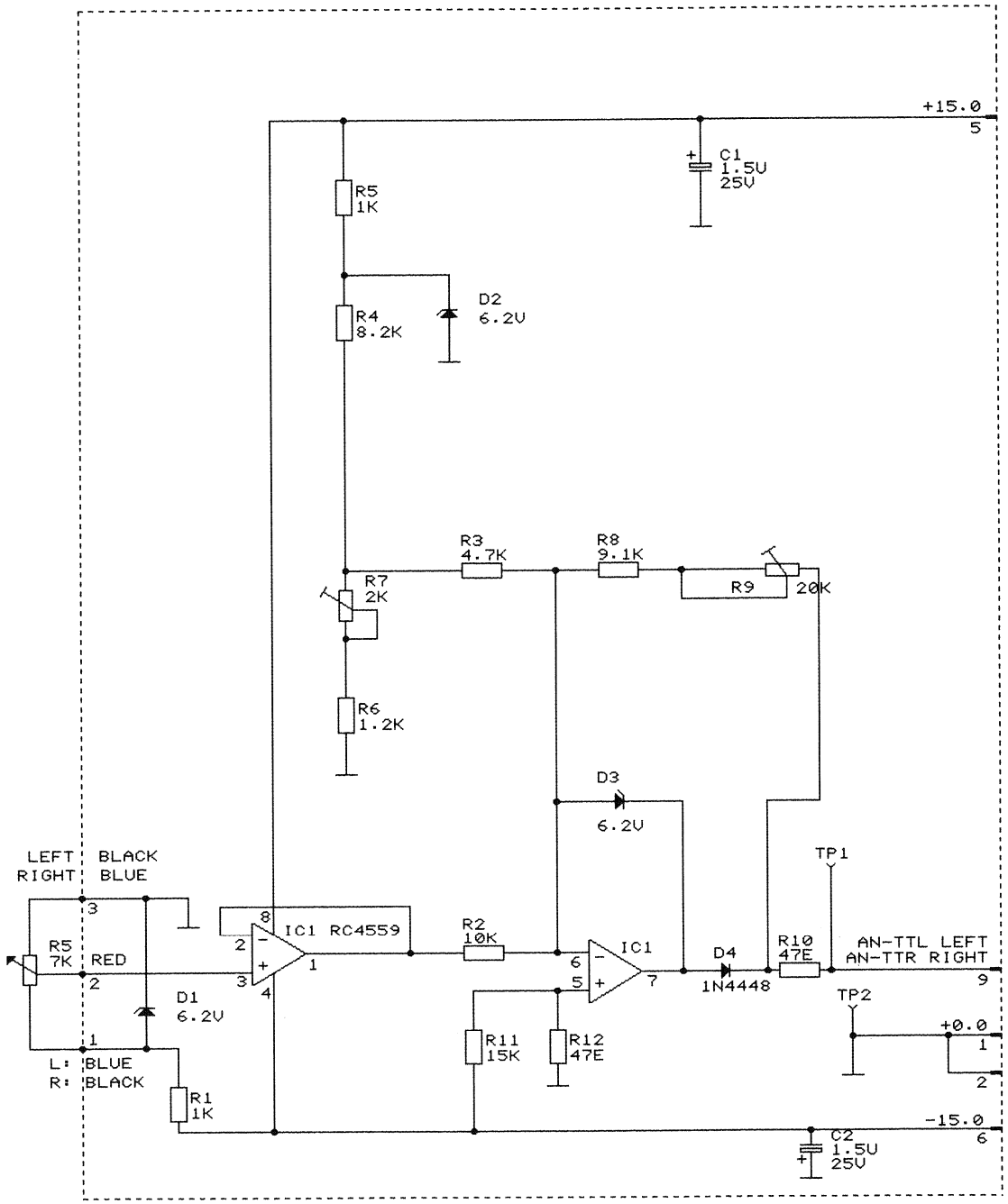

© 17.10.1988 IVA			PAGE 1 OF 1
	A820 TAPE TRANSPORT SECTION		
STUDER	TAPE TENSION SENSOR PCB	SC	1.820.772.81

TAPE TENSION SENSOR PCB 1.820.772.81

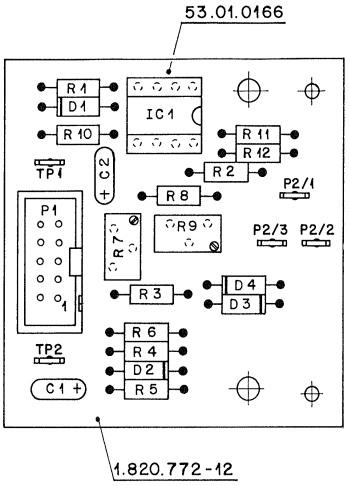

Schild 1.820.772-01
aufgeklebt nach Fabrikationsmuster.

IND.	POS.NO.	PART NO.	VALUE	SPECIFICATIONS / EQUIVALENT	MANUF.
	C.....1	59.26.5159	1.5 uF	25V, Sal	Ph
	C.....2	59.26.5159	1.5 uF	25V, Sal	Ph
	D.....1	50.04.1118	6.2 V Z	BZX 55 C6V2	ITT,Mot,Ph,Tf,SGS,Tho
	D.....2	50.04.1102	6.8 V Z	BZX 55 C6V8	ITT,Mot,Ph,Tf,SGS,Tho
	D.....3	50.04.1118	6.2 V Z	BZX 55 C6V2	ITT,Mot,Ph,Tf,SGS,Tho
	D.....4	50.04.0125	1 N 4448		Fc,ITT,Ph,SES,Tf
	IC....1	50.09.0107	RC 4559 NB	uPC 4559	NEC,Ra
	P.....1	54.14.2001	10 cont.	see note 1	
	P...2/1	54.02.0320			
	P...2/2	54.02.0320			
	P...2/3	54.02.0320			
	R.....1	57.11.4102	1 kOhm		
	R.....2	57.11.4103	10 kOhm		
	R.....3	57.11.4472	4.7 kOhm		
	R.....4	57.11.4822	8.2 kOhm		
	R.....5	57.11.4102	1 kOhm		
	R.....6	57.11.4122	1.2 kOhm		
	R.....7	58.05.1202	2 kOhm	see note 2	
	R.....8	57.11.3912	9.1 kOhm		
	R.....9	58.05.1203	20 kOhm	see note 3	
	R....10	57.11.4470	47 Ohm		
	R....11	57.11.3153	15 kOhm		
	R....12	57.11.3470	47 Ohm		
	TP....1	54.02.0320	Testpoint		
	TP....2	54.02.0320	Testpoint		

IND.	POS.NO.	PART NO.	VALUE	SPECIFICATIONS / EQUIVALENT	MANUF.
Note 1 - Connector					
			Burndy		BPH 7 B 10 B00 GS
			Yamaichi		FAP-10-08//4
Note 2 - 2 kOhm Potentiometer, linear					
			Allan Bradley		E 2B 202
			Bourns		386 F-1-202
			Spectrol		63 M 202 T010
Note 3 - 20 kOhm Potentiometer, linear					
			Allan Bradley		E 2B 203
			Bourns		386 F-1-203
			Spectrol		63 M 203 T010

Sal = Solid Aluminium.

MANUFACTURER: Fc=Fairchild, ITT=Intermetall, Mot=Motorola, NEC= Nippon Electric Corp., Ph=Philips, Ra-Raytheon, SGS-SGS/Ates, Ses=Secosem, Tho=Thomson, Tf=Telefunken.

ORIG 88/11/29

BLOCK DIAGRAM
SPOOLING MOTOR DRIVER 1.820.759.85

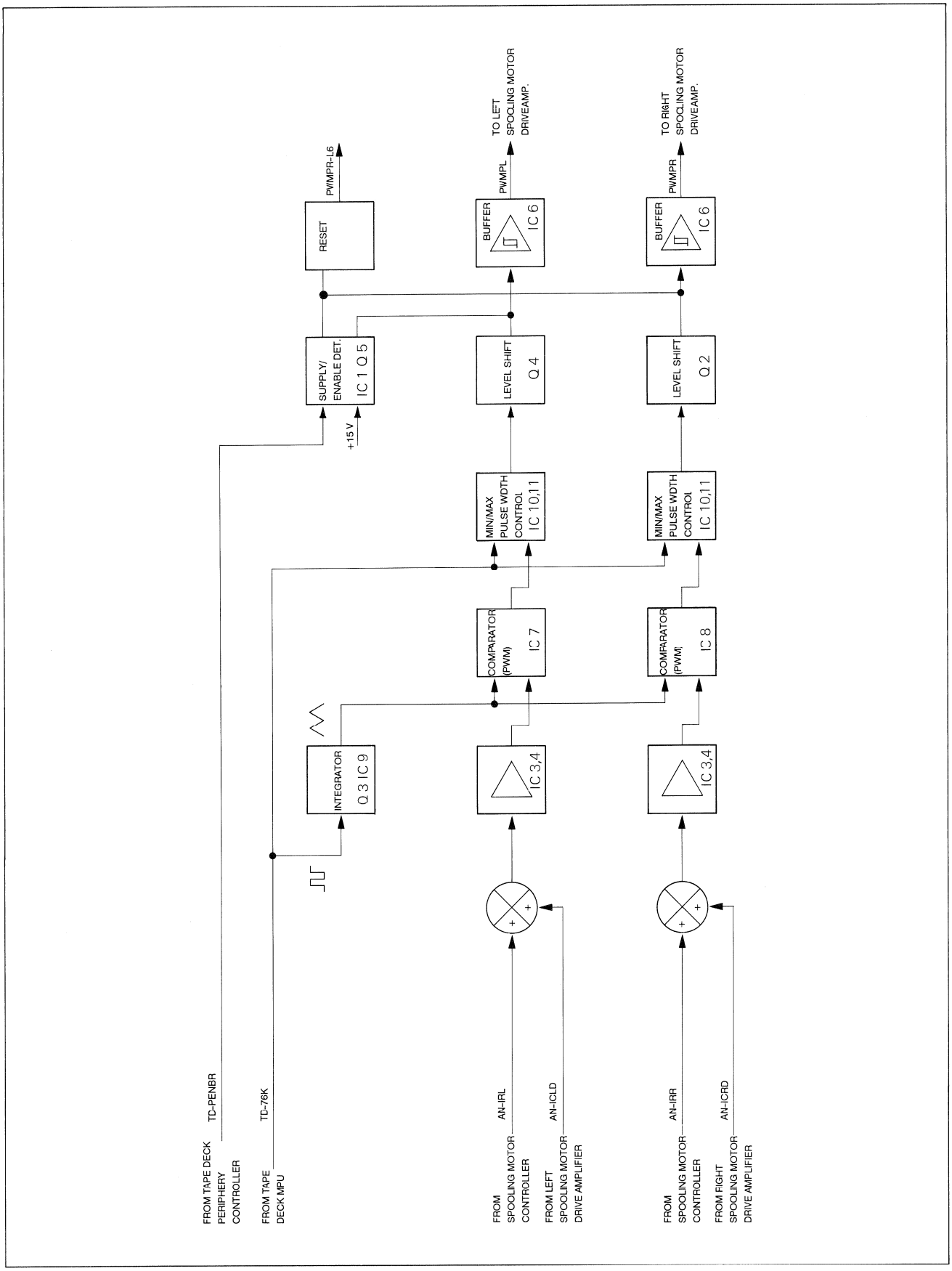

SPOOLING MOTOR DRIVER 1.820.759.85

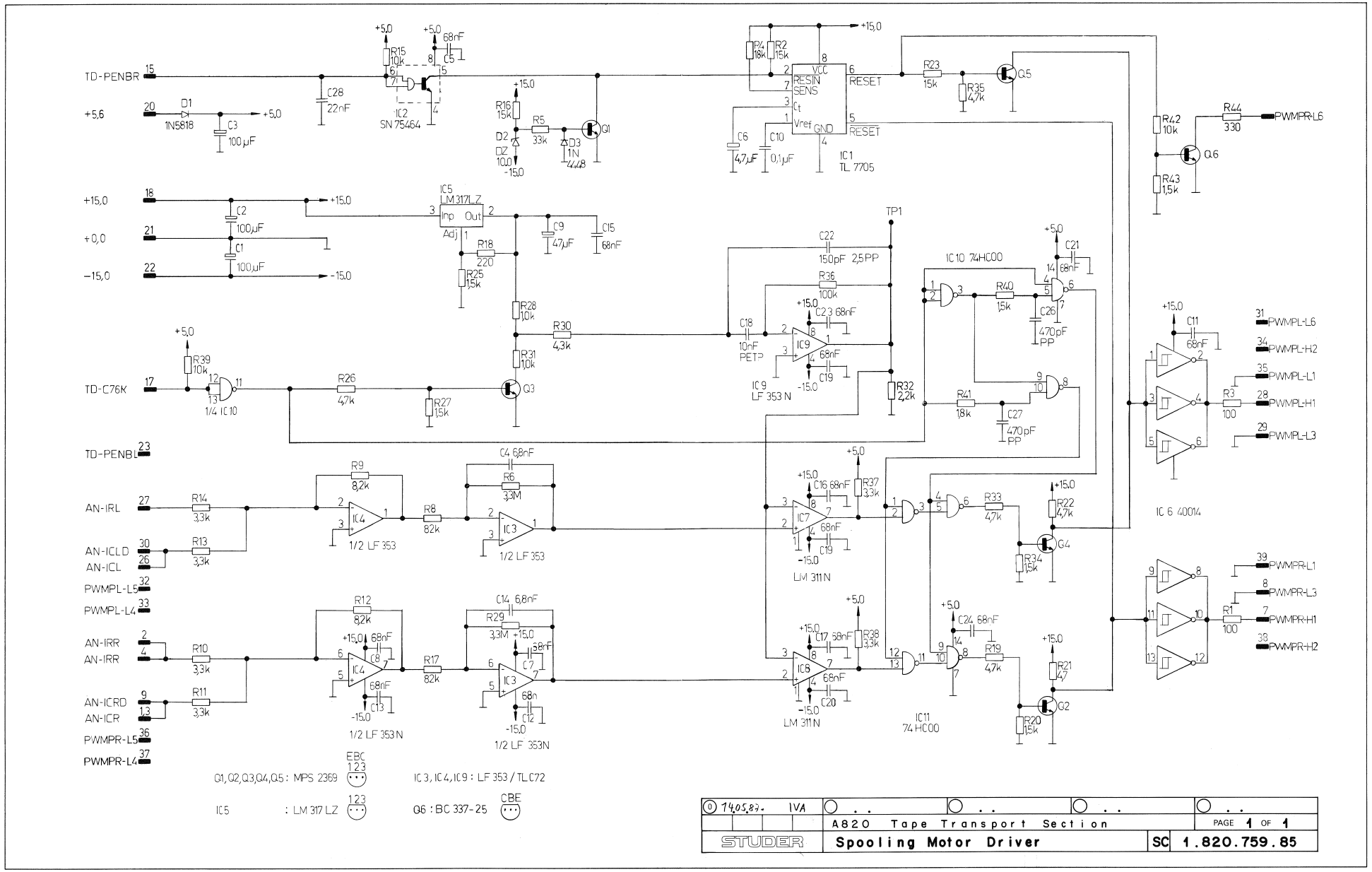

0 7405.87 IVA				
STUDER	A820 Tape Transport Section			PAGE 1 OF 1
	Spooling Motor Driver		SC	1.820.759.85

SPOOLING MOTOR DRIVER 1.820.759.85

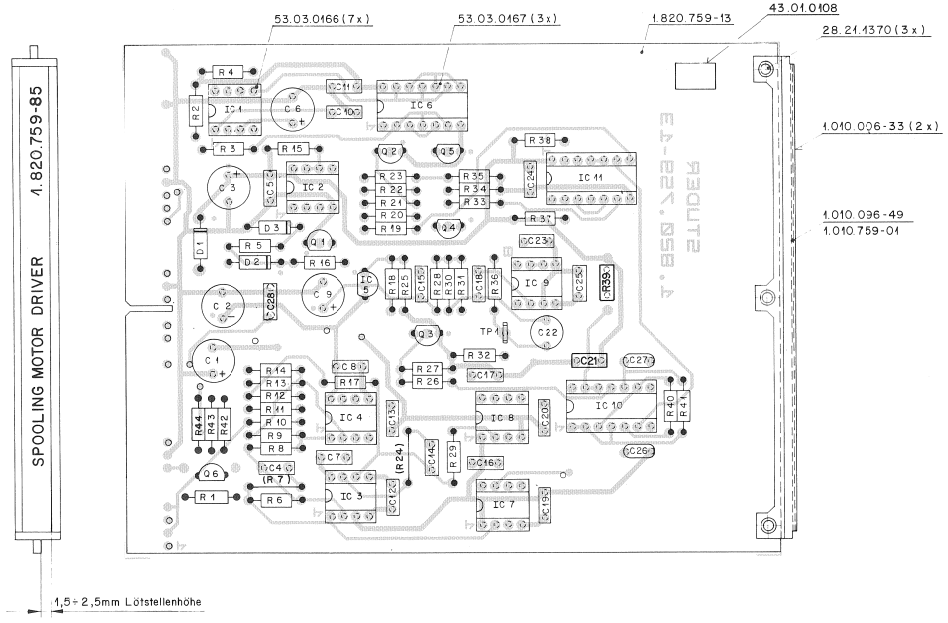

IND.	POS.NO.	PART NO.	VALUE	SPECIFICATIONS / EQUIVALENT	MANUF.
	C.....1	59.22.5101	100 uF	25V, El	
	C.....2	59.22.5101	100 uF	25V, El	
	C.....3	59.22.5101	100 uF	El	
	C.....4	59.06.0682	6.8 nF	10%	
	C.....5	59.06.0683	68 nF		
	C.....6	59.26.5679	4.7 uF	25V, El	
	C.....7	59.06.0683	68 nF		
	C.....8	59.06.0683	68 nF		
	C.....9	59.22.5470	47 uF	25V, El	
	C....10	59.06.0104	100 nF		
	C....11	59.06.0683	68 nF		
	C....12	59.06.0683	68 nF		
	C....13	59.06.0683	68 nF		
	C....14	59.06.0682	6.8 nF	10%	
	C....15	59.06.0683	68 nF		
	C....16	59.06.0683	68 nF		
	C....17	59.06.0683	68 nF		
	C....18	59.06.0103	10 nF		
	C....19	59.06.0683	68 nF		
	C....20	59.06.0683	68 nF		
	C....21	59.06.0683	68 nF		
	C....22	59.05.2151	150 pF	5%	
	C....23	59.06.0683	68 nF		
	C....24	59.06.0683	68 nF		
	C....25	59.06.0683	68 nF		
	C....26	59.34.5471	470 pF	5%	
	C....27	59.34.5471	470 pF	5%	
	C....28	59.06.0223	22 nF		
	D.....1	50.04.0512	1N 5818	LN 5819	Mot
	D.....2	50.04.1114	10 V Z		ITT,Sem
	D.....3	50.04.0125	1N 4448		Fc,ITT,Ph,Sem,Tf
	IC.....1	50.11.0122	TL 7705		TI
	IC.....2	50.05.0204	SN 75464P	DS 75464 N	NS,TI
	IC.....3	50.09.0101	TL 072 CP	LF 353 N	NS,TI
	IC.....4	50.09.0101	TL 072 CP	LF 353 N	NS,TI

STUDER (00) 87/05/14 BD SPOOLING MOTOR DRIVER PL 1.820.759.85 PAGE 1

IND.	POS.NO.	PART NO.	VALUE	SPECIFICATIONS / EQUIVALENT	MANUF.
	IC....5	50.10.0108	LM 317 LZ		Mot,NS
	IC....6	50.07.0014	40014 BPC	MC14584 BPC	Mot,NS,Ph,To
	IC....7	50.11.0114	LM 311 N	LM 311 P	Mot,NS
	IC....8	50.11.0114	LM 311 N	LM 311 P	Mot,NS
	IC....9	50.09.0101	TL 072 CP	LF 353 N	NS,TI
	IC....10	50.17.1000	74 HC 00		Mot,NS,Ph,RCA,SGS,TI,To
	IC....11	50.17.1000	74 HC 00		Mot,NS,Ph,RCA,SGS,TI,To
	Q.....1	50.03.0508	MPS 2369		Mot
	Q.....2	50.03.0508	MPS 2369		Mot
	Q.....3	50.03.0508	MPS 2369		Mot
	Q.....4	50.03.0508	MPS 2369		Mot
	Q.....5	50.03.0508	MPS 2369		Mot
	Q.....6	50.03.0340	BC 337-25		ITT,Ph,Sie
	R.....1	57.11.4101	100 Ohm		
	R.....2	57.11.4153	15 kOhm		
	R.....3	57.11.4101	100 Ohm		
	R.....4	57.11.4183	18 kOhm	5%	
	R.....5	57.11.4333	33 kOhm	5%	
	R.....6	57.11.5335	3.3 MOhm		
	R.....7		not used	(REPLACED BY WIRE BRIDGE)	
	R.....8	57.11.4823	82 kOhm	5%	
	R.....9	57.11.4822	8.2 kOhm	5%	
	R....10	57.11.4332	3.3 kOhm	5%	
	R....11	57.11.4332	3.3 kOhm	5%	
	R....12	57.11.4822	8.2 kOhm	5%	
	R....13	57.11.4332	3.3 kOhm	5%	
	R....14	57.11.4332	3.3 kOhm	5%	
	R....15	57.11.4103	10 kOhm		
	R....16	57.11.4153	15 kOhm	5%	
	R....17	57.11.4823	82 kOhm	5%	
	R....18	57.11.4221	220 Ohm	2%	
	R....19	57.11.4472	4.7 kOhm	5%	
	R....20	57.11.4152	1.5 kOhm	5%	
	R....21	57.11.4472	4.7 kOhm	5%	
	R....22	57.11.4472	4.7 kOhm	5%	

STUDER (00) 87/05/14 BD SPOOLING MOTOR DRIVER PL 1.820.759.85 PAGE 2

IND.	POS.NO.	PART NO.	VALUE	SPECIFICATIONS / EQUIVALENT	MANUF.
	R....23	57.11.4153	15 kOhm	5%	
	R....24		not used	(REPLACED BY WIRE BRIDGE)	
	R....25	57.11.4152	1.5 kOhm	2%	
	R....26	57.11.4472	4.7 kOhm	5%	
	R....27	57.11.4152	1.5 kOhm	5%	
	R....28	57.11.4102	1 kOhm	2%	
	R....29	57.11.5335	3.3 MOhm		
	R....30	57.11.9432	4.3 kOhm	1%	
	R....31	57.11.4102	1 kOhm	2%	
	R....32	57.11.4222	2.2 kOhm	5%	
	R....33	57.11.4472	4.7 kOhm	5%	
	R....34	57.11.4152	1.5 kOhm	5%	
	R....35	57.11.4472	4.7 kOhm	5%	
	R....36	57.11.4104	100 kOhm		
	R....37	57.11.4332	3.3 kOhm	5%	
	R....38	57.11.4332	3.3 kOhm	5%	
	R....39	57.11.4103	10 kOhm		
	R....40	57.11.4152	1.5 kOhm	2%	
	R....41	57.11.4182	1.8 kOhm	2%	
	R....42	57.11.4103	10 kOhm	5%	
	R....43	57.11.4152	1.5 kOhm	5%	
	R....44	57.11.4331	330 Ohm	5%	

El=Electrolytic

Manufacturer: Fc=Fairchild, ITT=Intermetall, Mot=Motorola,
NS=National Semiconductors, Ph=Philips,
RCA=RCA Corporation of America, Sem=Semicosem, SGS=SGS/Ates,
Tf=Telefunken, TI=Texas Instruments, To=Toshiba.

ORIG 87/05/14

STUDER (00) 87/05/14 BD SPOOLING MOTOR DRIVER PL 1.820.759.85 PAGE 3

BLOCK DIAGRAM
SPOOLING MOTOR DRIVE AMPLIFIER 1.820.875

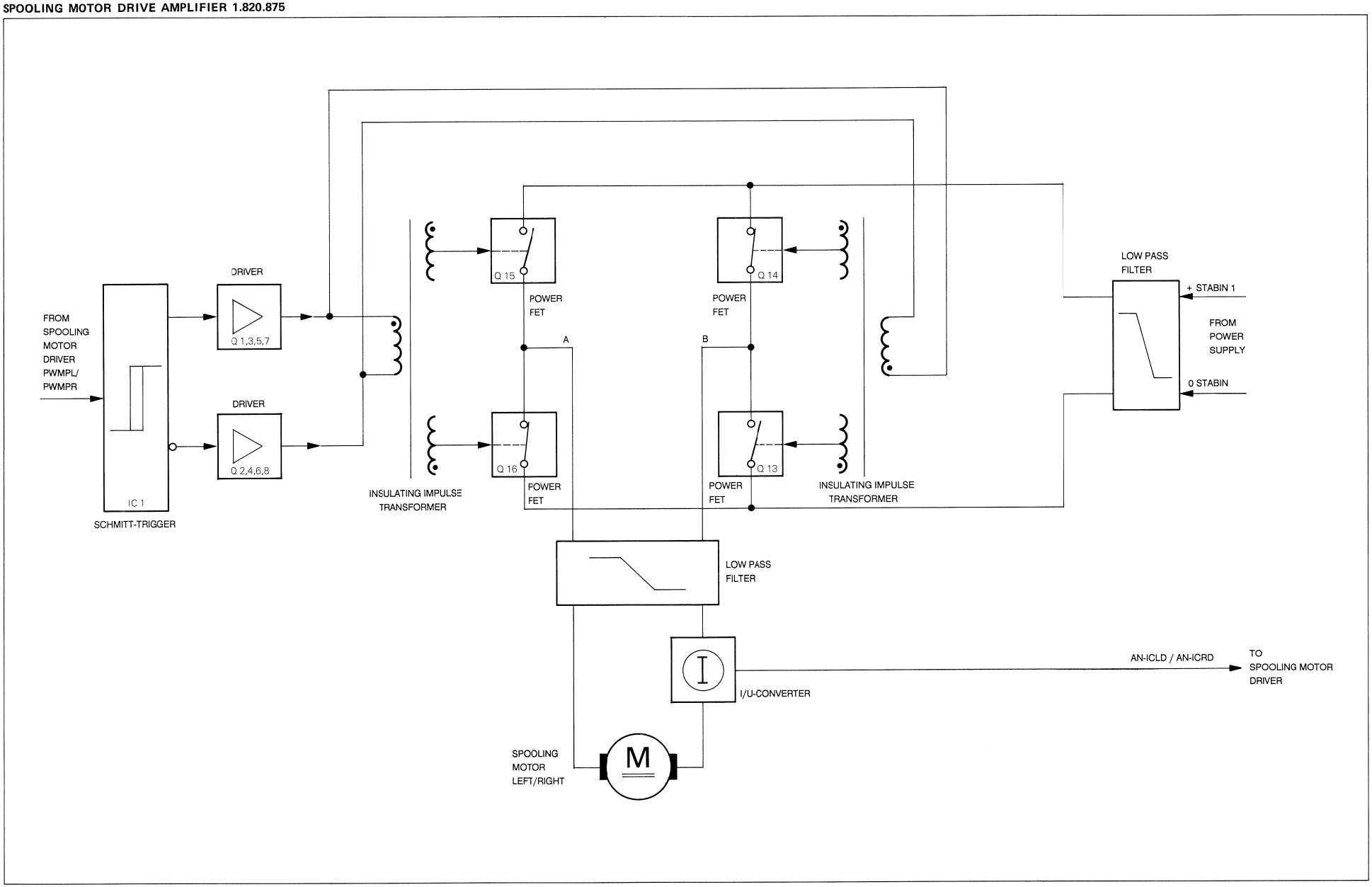

SPOOLING MOTOR DRIVE AMPLIFIER 1.820.875.00

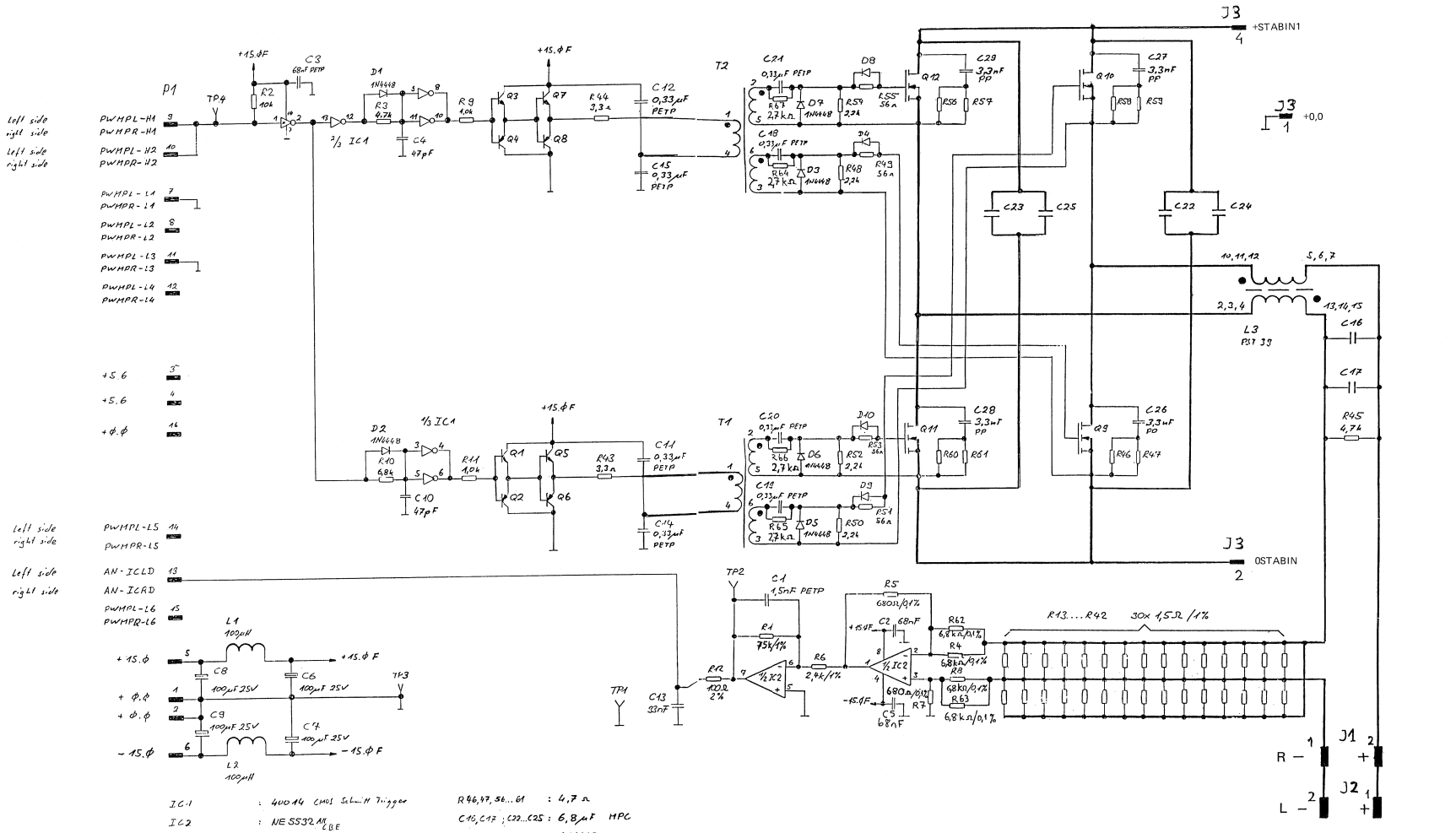

18.8.86 ND		A 820 Tape Transport Section			
STUDER	Spooling Motor Drive Amplifier ESE	SC	1.820.875.00	PAGE 1 OF 1	

SPOOLING MOTOR DRIVE AMPLIFIER 1.820.875.00

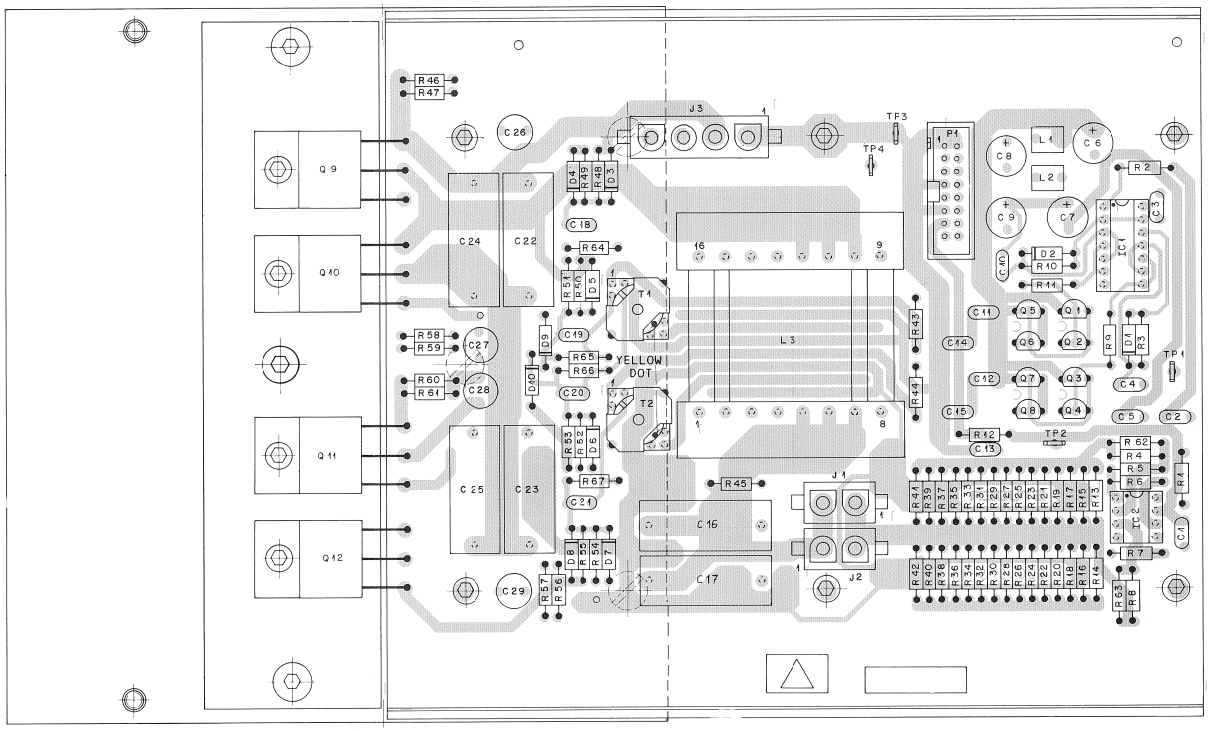

IND.	POS.NO.	PART NO.	VALUE	SPECIFICATIONS / EQUIVALENT	MANUF.
	R.....8	57.99.0250	6.8 kOhm	0.1%	
	R.....9	57.11.4102	1.0 kOhm	10%	
	R.....10	57.11.4682	6.8 kOhm	2%	
	R.....11	57.11.4102	1.0 kOhm	10%	
	R.....12	57.11.4101	100 Ohm	2%	
	R.....13	57.11.3159	1.5 Ohm	1%	
	R.....14	57.11.3159	1.5 Ohm	1%	
	R.....15	57.11.3159	1.5 Ohm	1%	
	R.....16	57.11.3159	1.5 Ohm	1%	
	R.....17	57.11.3159	1.5 Ohm	1%	
	R.....18	57.11.3159	1.5 Ohm	1%	
	R.....19	57.11.3159	1.5 Ohm	1%	
	R.....20	57.11.3159	1.5 Ohm	1%	
	R.....21	57.11.3159	1.5 Ohm	1%	
	R.....22	57.11.3159	1.5 Ohm	1%	
	R.....23	57.11.3159	1.5 Ohm	1%	
	R.....24	57.11.3159	1.5 Ohm	1%	
	R.....25	57.11.3159	1.5 Ohm	1%	
	R.....26	57.11.3159	1.5 Ohm	1%	
	R.....27	57.11.3159	1.5 Ohm	1%	
	R.....28	57.11.3159	1.5 Ohm	1%	
	R.....29	57.11.3159	1.5 Ohm	1%	
	R.....30	57.11.3159	1.5 Ohm	1%	
	R.....31	57.11.3159	1.5 Ohm	1%	
	R.....32	57.11.3159	1.5 Ohm	1%	
	R.....33	57.11.3159	1.5 Ohm	1%	
	R.....34	57.11.3159	1.5 Ohm	1%	
	R.....35	57.11.3159	1.5 Ohm	1%	
	R.....36	57.11.3159	1.5 Ohm	1%	
	R.....37	57.11.3159	1.5 Ohm	1%	
	R.....38	57.11.3159	1.5 Ohm	1%	
	R.....39	57.11.3159	1.5 Ohm	1%	
	R.....40	57.11.3159	1.5 Ohm	1%	
	R.....41	57.11.3159	1.5 Ohm	1%	
	R.....42	57.11.3159	1.5 Ohm	1%	
	R.....43	57.11.4339	3.3 Ohm	10%	
	R.....44	57.11.4339	3.3 Ohm	10%	

IND.	POS.NO.	PART NO.	VALUE	SPECIFICATIONS / EQUIVALENT	MANUF.
	R.....45	57.11.4472	4.7 kOhm	10%	
	R.....46	57.11.4479	4.7 Ohm	10%	
	R.....47	57.11.4479	4.7 Ohm	10%	
	R.....48	57.11.4222	2.2 kOhm	10%	
	R.....49	57.11.4560	56 Ohm	10%	
	R.....50	57.11.4222	2.2 kOhm	10%	
	R.....51	57.11.4560	56 Ohm	10%	
	R.....52	57.11.4222	2.2 kOhm	10%	
	R.....53	57.11.4560	56 Ohm	10%	
	R.....54	57.11.4222	2.2 kOhm	10%	
	R.....55	57.11.4560	56 Ohm	10%	
	R.....56	57.11.4479	4.7 Ohm	10%	
	R.....57	57.11.4479	4.7 Ohm	10%	
	R.....58	57.11.4479	4.7 Ohm	10%	
	R.....59	57.11.4479	4.7 Ohm	10%	
	R.....60	57.11.4479	4.7 Ohm	10%	
	R.....61	57.11.4479	4.7 Ohm	10%	
	R.....62	57.99.0250	6.8 kOhm	0.1%	
	R.....63	57.99.0250	6.8 kOhm	0.1%	
	R.....64	57.11.4272	2.7 kOhm	10%	
	R.....65	57.11.4272	2.7 kOhm	10%	
	R.....66	57.11.4272	2.7 kOhm	10%	
	R.....67	57.11.4272	2.7 kOhm	10%	
	T.....1	1.022.247.00		Drive transformer	St
	T.....2	1.022.247.00		Drive transformer	St
	TP....1	54.02.0320		Testpoint	
	TP....2	54.02.0320		Testpoint	
	TP....3	54.02.0320		Testpoint	
	TP....4	54.02.0320		Testpoint	

IND.	POS.NO.	PART NO.	VALUE	SPECIFICATIONS / EQUIVALENT	MANUF.
	C.....1	59.04.0152	1.5 nF	10%	
	C.....2	59.04.0683	68 nF	20%	
	C.....3	59.04.0683	68 nF	20%	
	C.....4	59.34.2470	47 pF	5%	
	C.....5	59.04.0683	68 nF	20%	
	C.....6	59.27.5101	100 uF	25V	
	C.....7	59.27.5101	100 uF	25V	
	C.....8	59.27.5101	100 uF	25V	
	C.....9	59.27.5101	100 uF	25V	
	C.....10	59.34.2470	47 pF	5%	
	C.....11	59.04.0334	330 nF	10V/us	
	C.....12	59.04.0334	330 nF	10V/us	
	C.....13	59.04.0333	33 nF	10%	
	C.....14	59.04.0334	330 nF	10V/us	
	C.....15	59.04.0334	330 nF	10V/us	
	C.....16	59.99.0268	6.8 uF	63V	
	C.....17	59.27.0268	6.8 uF	63V	
	C.....18	59.04.0334	330 nF	10V/us	
	C.....19	59.04.0334	330 nF	10V/us	
	C.....20	59.04.0334	330 nF	10V/us	
	C.....21	59.04.0334	330 nF	10V/us	
	C.....22	59.99.0268	6.8 uF	63V, 1V/us	
	C.....23	59.99.0268	6.8 uF	63V, 1V/us	
	C.....24	59.99.0268	6.8 uF	63V, 1V/us	
	C.....25	59.99.0268	6.8 uF	63V, 1V/us	
	C.....26	59.05.2332	3.3 nF	63V, 1000V/us	
	C.....27	59.05.2332	3.3 nF	63V, 1000V/us	
	C.....28	59.05.2332	3.3 nF	63V, 1000V/us	
	C.....29	59.05.2332	3.3 nF	63V, 1000V/us	
	D.....1	50.04.0125	1N 4448		Fc,ITT,PhSes,Tf
	D.....2	50.04.0125	1N 4448		Fc,ITT,PhSes,Tf
	D.....3	50.04.0125	1N 4448		Fc,ITT,PhSes,Tf
	D.....4	50.04.0125	1N 4448		Fc,ITT,PhSes,Tf
	D.....5	50.04.0125	1N 4448		Fc,ITT,PhSes,Tf
	D.....6	50.04.0125	1N 4448		Fc,ITT,PhSes,Tf
	D.....7	50.04.0125	1N 4448		Fc,ITT,PhSes,Tf

IND.	POS.NO.	PART NO.	VALUE	SPECIFICATIONS / EQUIVALENT	MANUF.
	D.....8	50.04.0125	1N 4448		Fc,ITT,PhSes,Tf
	D.....9	50.04.0125	1N 4448		Fc,ITT,PhSes,Tf
	D.....10	50.04.0125	1N 4448		Fc,ITT,PhSes,Tf
	IC....1	50.07.0014	40 014 BPC	MC14 584 BCP	Fc,Sig,Mot,NS
	IC....2	50.09.0106	NE 5532 AN	XR 5532 AN	Ex,Sig
	J.....1	54.25.0002		see note 1	
	J.....2	54.25.0002		see note 1	
	J.....3	54.25.0004		see note 2	
	L.....1	62.42.3101	100 uH		
	L.....2	62.42.3101	100 uH		
	L.....3	1.022.246.00		Choke coil	St
	P.....1	54.14.2002		see note 3	
	Q.....1	50.03.0360	BC 337-25		ITT,NS,PhSie
	Q.....2	50.03.0351	BC 327-25		ITT,PhSie
	Q.....3	50.03.0360	BC 337-25		ITT,NS,PhSie
	Q.....4	50.03.0351	BC 327-25		ITT,PhSie
	Q.....5	50.03.0360	BC 337-25		ITT,NS,PhSie
	Q.....6	50.03.0351	BC 327-25		ITT,PhSie
	Q.....7	50.03.0360	BC 337-25		ITT,NS,PhSie
	Q.....8	50.03.0351	BC 327-25		ITT,PhSie
	Q.....9	50.03.1508	RFH 25N 20		RCA
	Q.....10	50.03.1508	RFH 25N 20		RCA
	Q.....11	50.03.1508	RFH 25N 20		RCA
	Q.....12	50.03.1508	RFH 25N 20		RCA
	R.....1	57.11.3753	75 kOhm	1%	
	R.....2	57.11.4103	10 kOhm	10%	
	R.....3	57.11.4472	4.7 kOhm	2%	
	R.....4	57.99.0250	6.8 kOhm	0.1%	
	R.....5	57.99.0199	680 Ohm	0.1%	
	R.....6	57.11.3242	2.4 kOhm	1%	
	R.....7	57.99.0199	680 Ohm	0.1%	

Note 1 - Connector 2 contacts:
AMP nr. 826846-3

Note 2 - Connector 4 contacts:
AMP nr. 826848-3
AMP nr. 826848-1

Note 3 - Connector 16 contacts:
Yamaichi nr. FAP-16-08-4055
Burndy nr. BPH 9 016 800 G5
3M nr. 7616-6002 V2

Manufacturer: Ex=Exar, Fc=Fairchild, ITT=Intermetall, NS=National Semiconductors, Ph=Philips (incl.Valvo), RCA=Radio Corporation of America, Ses=Sescosem, Sig=Signetics, Sie=Siemens, St=Studer, Tf=Telefunken.

ORIG 86/08/18

SPOOLING MOTOR DRIVE AMPLIFIER 1.820.875.81

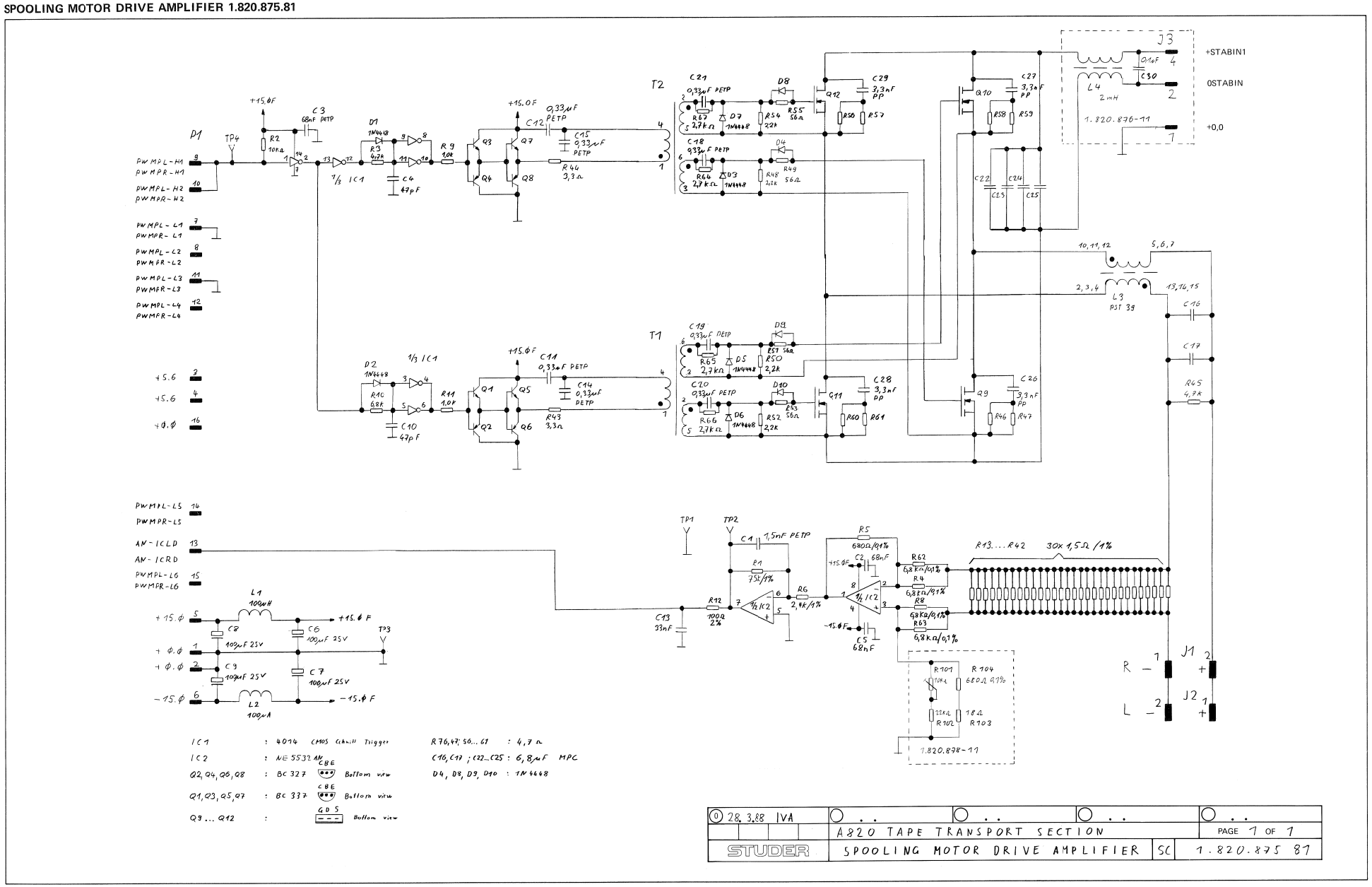

IC1 : 4011 CMOS Schmitt Trigger
IC2 : NE 5532 AN
Q2, Q4, Q6, Q8 : BC 327 (C B E) Bottom view
Q1, Q3, Q5, Q7 : BC 337 (C B E) Bottom view
Q9 ... Q12 : (G D S) Bottom view

R76,47; 50...61 : 4,7 Ω
C16, C17 ; C22...C25 : 6,8 µF MPC
D4, D8, D9, D10 : 1N 4448

0 28.3.88 IVA				
	A820 TAPE TRANSPORT SECTION			PAGE 1 OF 1
STUDER	SPOOLING MOTOR DRIVE AMPLIFIER	SC	1.820.875 87	

SPOOLING MOTOR DRIVE AMPLIFIER 1.820.875.81

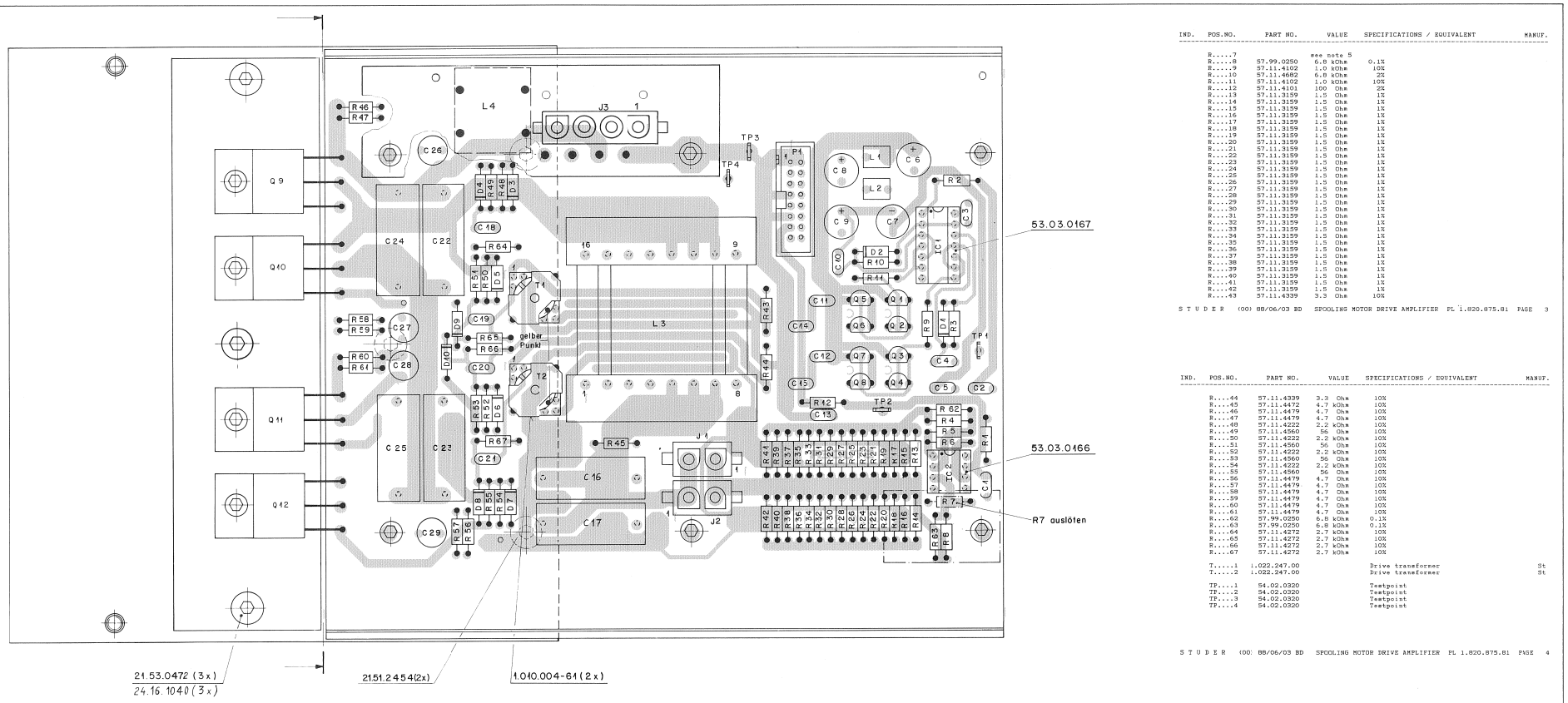

IND.	POS.NO.	PART NO.	VALUE	SPECIFICATIONS / EQUIVALENT	MANUF.
	R....7		see note 5		
	R....8	57.99.0250	6.8 kOhm	0.1%	
	R....9	57.11.4102	1.0 kOhm	10%	
	R....10	57.11.4682	6.8 kOhm	2%	
	R....11	57.11.4102	1.0 kOhm	10%	
	R....12	57.11.4101	100 Ohm	2%	
	R....13	57.11.3159	1.5 Ohm	1%	
	R....14	57.11.3159	1.5 Ohm	1%	
	R....15	57.11.3159	1.5 Ohm	1%	
	R....16	57.11.3159	1.5 Ohm	1%	
	R....17	57.11.3159	1.5 Ohm	1%	
	R....18	57.11.3159	1.5 Ohm	1%	
	R....19	57.11.3159	1.5 Ohm	1%	
	R....20	57.11.3159	1.5 Ohm	1%	
	R....21	57.11.3159	1.5 Ohm	1%	
	R....22	57.11.3159	1.5 Ohm	1%	
	R....23	57.11.3159	1.5 Ohm	1%	
	R....24	57.11.3159	1.5 Ohm	1%	
	R....25	57.11.3159	1.5 Ohm	1%	
	R....26	57.11.3159	1.5 Ohm	1%	
	R....27	57.11.3159	1.5 Ohm	1%	
	R....28	57.11.3159	1.5 Ohm	1%	
	R....29	57.11.3159	1.5 Ohm	1%	
	R....30	57.11.3159	1.5 Ohm	1%	
	R....31	57.11.3159	1.5 Ohm	1%	
	R....32	57.11.3159	1.5 Ohm	1%	
	R....33	57.11.3159	1.5 Ohm	1%	
	R....34	57.11.3159	1.5 Ohm	1%	
	R....35	57.11.3159	1.5 Ohm	1%	
	R....36	57.11.3159	1.5 Ohm	1%	
	R....37	57.11.3159	1.5 Ohm	1%	
	R....38	57.11.3159	1.5 Ohm	1%	
	R....39	57.11.3159	1.5 Ohm	1%	
	R....40	57.11.3159	1.5 Ohm	1%	
	R....41	57.11.3159	1.5 Ohm	1%	
	R....42	57.11.3159	1.5 Ohm	1%	
	R....43	57.11.4339	3.3 Ohm	10%	

IND.	POS.NO.	PART NO.	VALUE	SPECIFICATIONS / EQUIVALENT	MANUF.
	R....44	57.11.4339	3.3 Ohm	10%	
	R....45	57.11.4472	4.7 kOhm	10%	
	R....46	57.11.4479	4.7 Ohm	10%	
	R....47	57.11.4479	4.7 Ohm	10%	
	R....48	57.11.4222	2.2 kOhm	10%	
	R....49	57.11.4560	56 Ohm	10%	
	R....50	57.11.4222	2.2 kOhm	10%	
	R....51	57.11.4560	56 Ohm	10%	
	R....52	57.11.4222	2.2 kOhm	10%	
	R....53	57.11.4560	56 Ohm	10%	
	R....54	57.11.4222	2.2 kOhm	10%	
	R....55	57.11.4560	56 Ohm	10%	
	R....56	57.11.4479	4.7 Ohm	10%	
	R....57	57.11.4479	4.7 Ohm	10%	
	R....58	57.11.4479	4.7 Ohm	10%	
	R....59	57.11.4479	4.7 Ohm	10%	
	R....60	57.11.4479	4.7 Ohm	10%	
	R....61	57.11.4479	4.7 Ohm	10%	
	R....62	57.99.0250	6.8 kOhm	0.1%	
	R....63	57.99.0250	6.8 kOhm	0.1%	
	R....64	57.11.4272	2.7 kOhm	10%	
	R....65	57.11.4272	2.7 kOhm	10%	
	R....66	57.11.4272	2.7 kOhm	10%	
	R....67	57.11.4272	2.7 kOhm	10%	
	T....1	1.022.247.00		Drive transformer	St
	T....2	1.022.247.00		Drive transformer	St
	TP....1	54.02.0320		Testpoint	
	TP....2	54.02.0320		Testpoint	
	TP....3	54.02.0320		Testpoint	
	TP....4	54.02.0320		Testpoint	

IND.	POS.NO.	PART NO.	VALUE	SPECIFICATIONS / EQUIVALENT	MANUF.
	C....1	59.06.0152	1.5 nF	10%	
	C....2	59.06.0683	68 nF	20%	
	C....3	59.06.0683	68 nF	20%	
	C....4	59.34.2470	47 pF	5%	
	C....5	59.06.0683	68 nF	20%	
	C....6	59.22.5101	100 uF	25V	
	C....7	59.22.5101	100 uF	25V	
	C....8	59.22.5101	100 uF	25V	
	C....9	59.22.5101	100 uF	25V	
	C....10	59.34.2470	47 pF	5%	
	C....11	59.06.0334	330 nF	10V/us	
	C....12	59.06.0334	330 nF	10V/us	
	C....13	59.06.0333	33 nF	10%	
	C....14	59.06.0334	330 nF	10V/us	
	C....15	59.06.0334	330 nF	10V/us	
	C....16	59.99.0268	6.8 uF	63V	
	C....17	59.22.0268	6.8 uF	63V	
	C....18	59.06.0334	330 nF	10V/us	
	C....19	59.06.0334	330 nF	10V/us	
	C....20	59.06.0334	330 nF	10V/us	
	C....21	59.06.0334	330 nF	10V/us	
	C....22	59.99.0268	6.8 uF	63V, 1V/us	
	C....23	59.99.0268	6.8 uF	63V, 1V/us	
	C....24	59.99.0268	6.8 uF	63V, 1V/us	
	C....25	59.99.0268	6.8 uF	63V, 1V/us	
	C....26	59.05.2332	3.3 nF	63V, 1000V/us	
	C....27	59.05.2332	3.3 nF	63V, 1000V/us	
	C....28	59.05.2332	3.3 nF	63V, 1000V/us	
	C....29	59.05.2332	3.3 nF	63V, 1000V/us	
	D....1	50.04.0125	1N 4448		Fe,ITT,Ph,Sie,Tf
	D....2	50.04.0125	1N 4448		Fe,ITT,Ph,Sie,Tf
	D....3	50.04.0125	1N 4448		Fe,ITT,Ph,Sie,Tf
	D....4	50.04.0125	1N 4448		Fe,ITT,Ph,Sie,Tf
	D....5	50.04.0125	1N 4448		Fe,ITT,Ph,Sie,Tf
	D....6	50.04.0125	1N 4448		Fe,ITT,Ph,Sie,Tf
	D....7	50.04.0125	1N 4448		Fe,ITT,Ph,Sie,Tf

IND.	POS.NO.	PART NO.	VALUE	SPECIFICATIONS / EQUIVALENT	MANUF.
	D....8	50.04.0125	1N 4448		Fe,ITT,Ph,Sie,Tf
	D....9	50.04.0125	1N 4448		Fe,ITT,Ph,Sie,Tf
	D....10	50.04.0125	1N 4448		Fe,ITT,Ph,Sie,Tf
	IC....1	50.07.0014	40 014 BPC	MC14 584 BCP	Fe,Sig,Mot,NS
	IC....2	50.09.0106	NE 5532 AN	NS 5532 AN	Ex,Sig
	J....1	54.25.0002		see note 1	
	J....2	54.25.0002		see note 1	
	J....3	54.25.0004		see note 2	
	L....1	62.42.3101	100 uH		
	L....2	62.42.3101	100 uH		
	L....3	1.022.246.00		Choke coil	St
	L....4	62.99.0112		Suppression coil	Tokin
	P....1	54.14.2602		see note 3	
	Q....1	50.03.0340	BC 337-25		ITT,NS,Ph,Sie
	Q....2	50.03.0351	BC 327-25		ITT,Ph,Sie
	Q....3	50.03.0340	BC 337-25		ITT,NS,Ph,Sie
	Q....4	50.03.0351	BC 327-25		ITT,Ph,Sie
	Q....5	50.03.0340	BC 337-25		ITT,NS,Ph,Sie
	Q....6	50.03.0351	BC 327-25		ITT,Ph,Sie
	Q....7	50.03.0340	BC 337-25		ITT,NS,Ph,Sie
	Q....8	50.03.0351	BC 327-25		ITT,Ph,Sie
	Q....9	50.03.1608	RFH 25N 20	see note 4	RCA
	Q....10	50.03.1608	RFH 25N 20	see note 4	RCA
	Q....11	50.03.1608	RFH 25N 20	see note 4	RCA
	Q....12	50.03.1608	RFH 25N 20	see note 4	RCA
	R....1	57.11.3753	75 kOhm	1%	
	R....2	57.11.4103	10 kOhm	10%	
	R....3	57.11.4472	4.7 kOhm	2%	
	R....4	57.99.0250	6.8 kOhm	0.1%	
	R....5	57.99.0199	680 Ohm	0.1%	
	R....6	57.11.3242	2.4 kOhm	1%	

IND.	POS.NO.	PART NO.	VALUE	SPECIFICATIONS / EQUIVALENT	MANUF.

Note 1 - Connector 2 contacts:
AMP nr. 826846-3

Note 2 - Connector 4 contacts:
AMP nr. 826848-3
AMP nr. 826848-1

Note 3 - Connector 16 contacts:
Yamaichi nr. FAP-16-08-40SS
Burndy nr. BPH 9 B16 B00 GS
3M nr. 7616-6002 VZ

Note 4 - All power transistors must be from the same type and manufacturer.

Note 5 - Resistor 7 is replaced by Common Suppression Adjust Assembly 1.820.878-00.

Manufacturer: Ex=Exar, Fe=Fairchild, ITT=Intersetall, NS=National Semiconductors, Ph=Philips (incl.Valvo), RCA=Radio Corporation of America, Sw=Sescosem, Sig=Signetics, Sie=Siemens, St=Studer, Tf=Telefunken.

ORIG 88/06/03

SPOOLING MOTOR DRIVE AMPLIFIER 1.820.875.82

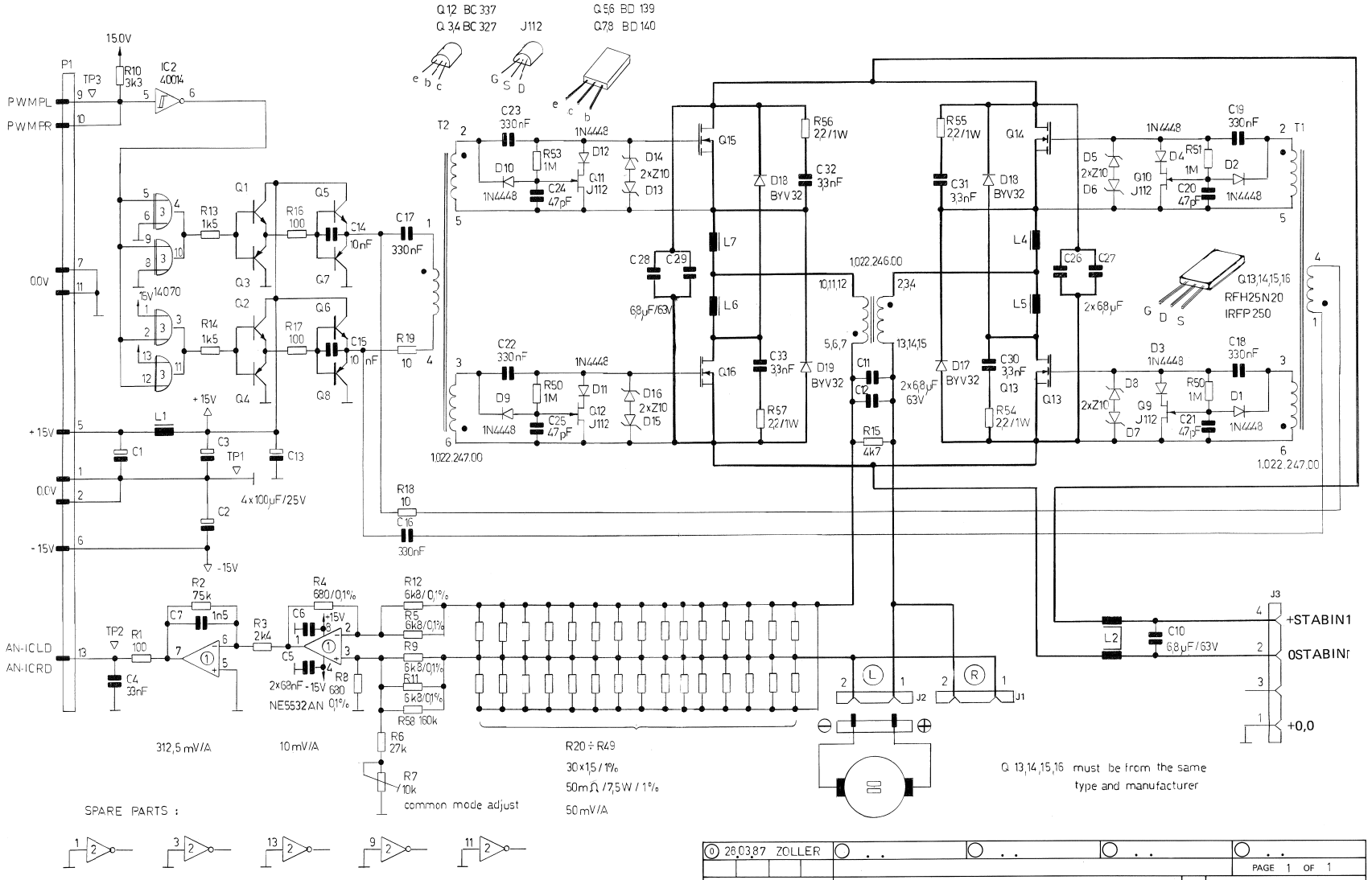

0 28.03.87 ZOLLER					PAGE 1 OF 1
STUDER	SPOOLING MOTOR DRIVE AMPLIFIER			SC	1.820.875.82

SPOOLING MOTOR DRIVE AMPLIFIER 1.820.875.82

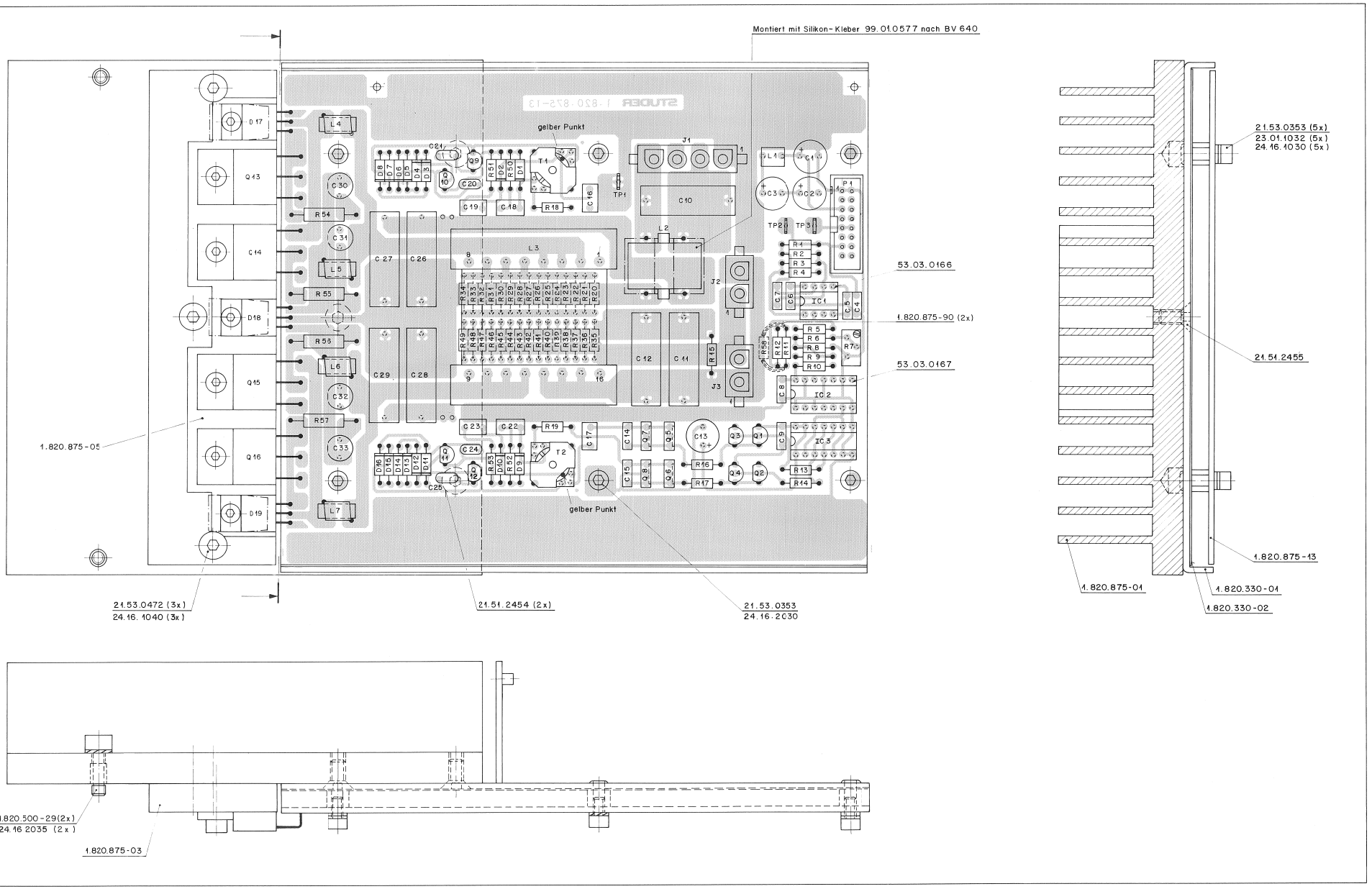

SPOOLING MOTOR DRIVE AMPLIFIER 1.820.875.82

IND.	POS.NO.	PART NO.	VALUE	SPECIFICATIONS / EQUIVALENT	MANUF.
	C.....1	59.22.5101	100 uF	20%, 25V, EL	
	C.....2	59.22.5101	100 uF	20%, 25V, EL	
	C.....3	59.22.5101	100 uF	20%, 25V, EL	
	C.....4	59.06.0333	33 nF	10%, 63V, PETP	
	C.....5	59.06.0683	68 nF	10%, 63V, PETP	
	C.....6	59.06.0683	68 nF	10%, 63V, PETP	
	C.....7	59.06.0152	1.5 nF	10%, 63V, PETP	
	C.....8	59.06.0683	68 nF	10%, 63V, PETP	
	C.....9	59.06.0683	68 nF	10%, 63V, PETP	
	C.....10	59.99.0268	6,8 uF	10%, 63V, PETP	
	C.....11	59.99.0268	6,8 uF	10%, 63V, PETP	
	C.....12	59.99.0268	6,8 uF	10%, 63V, PETP	
	C.....13	59.22.5101	100 uF	20%, 25V, EL	
	C.....14	59.06.0103	10 nF	10%, 63V, PETP	
	C.....15	59.06.0103	10 nF	10%, 63V, PETP	
	C.....16	59.06.0334	330 nF	10%, 63V, PETP	
	C.....17	59.06.0334	330 nF	10%, 63V, PETP	
	C.....18	59.06.0334	330 nF	10%, 63V, PETP	
	C.....19	59.06.0334	330 nF	10%, 63V, PETP	
	C.....20	59.34.2470	47 pF	5%, N150, CER	
	C.....21	59.34.2470	47 pF	5%, N150, CER	
	C.....22	59.06.0334	330 nF	10%, 63V, PETP	
	C.....23	59.06.0334	330 nF	10%, 63V, PETP	
	C.....24	59.34.2470	47 pF	5%, N150, CER	
	C.....25	59.34.2470	47 pF	5%, N150, CER	
	C.....26	59.99.0268	6,8 uF	10%, 63V, PETP	
	C.....27	59.99.0268	6,8 uF	10%, 63V, PETP	
	C.....28	59.99.0268	6,8 uF	10%, 63V, PETP	
	C.....29	59.99.0268	6,8 uF	10%, 63V, PETP	
	C.....30	59.47.2332	3,3 nF	5%, 160V, PP	
	C.....31	59.47.2332	3,3 nF	5%, 160V, PP	
	C.....32	59.47.2332	3,3 nF	5%, 160V, PP	
	C.....33	59.47.2332	3,3 nF	5%, 160V, PP	
	D.....1	50.04.0125	1N 4448		Fc,ITT,Ph,Ses,Tf
	D.....2	50.04.0125	1N 4448		Fc,ITT,Ph,Ses,Tf
	D.....3	50.04.0125	1N 4448		Fc,ITT,Ph,Ses,Tf

IND.	POS.NO.	PART NO.	VALUE	SPECIFICATIONS / EQUIVALENT	MANUF.
	D.....4	50.04.0125	1N 4448		Fc,ITT,Ph,Ses,Tf
	D.....5	50.04.1216	Z 10V	1,3W	ITT,Mot,Ph,Tf,Tho
	D.....6	50.04.1216	Z 10V	1,3W	ITT,Mot,Ph,Tf,Tho
	D.....7	50.04.1216	Z 10V	1,3W	ITT,Mot,Ph,Tf,Tho
	D.....8	50.04.1216	Z 10V	1,3W	ITT,Mot,Ph,Tf,Tho
	D.....9	50.04.0125	1N 4448		Fc,ITT,Ph,Ses,Tf
	D.....10	50.04.0125	1N 4448		Fc,ITT,Ph,Ses,Tf
	D.....11	50.04.0125	1N 4448		Fc,ITT,Ph,Ses,Tf
	D.....12	50.04.0125	1N 4448		Fc,ITT,Ph,Ses,Tf
	D.....13	50.04.1216	Z 10V	1,3W	ITT,Mot,Ph,Tf,Tho
	D.....14	50.04.1216	Z 10V	1,3W	ITT,Mot,Ph,Tf,Tho
	D.....15	50.04.1216	Z 10V	1,3W	ITT,Mot,Ph,Tf,Tho
	D.....16	50.04.1216	Z 10V	1,3W	ITT,Mot,Ph,Tf,Tho
	D.....17	50.04.0517	BYV 32		Mot,Ph
	D.....18	50.04.0517	BYV 32		Mot,Ph
	D.....19	50.04.0517	BYV 32		Mot,Ph
	IC.....1	50.39.0106	NE 5532AN	XR 5532AN	EX,SIG
	IC.....2	50.07.0014	MC40106BCP	..14584..	Mot,NS,Ph,RCA,To
	IC.....3	50.07.0070	MC14070BCP	HEF4070BP, CD4070BE	Mot,Ph,RCA
	J.....1	54.25.0004	4 POL 16A	see note 1	
	J.....2	54.25.0002	2 POL 16A	see note 2	
	J.....3	54.25.0002	2 POL 16A	see note 2	
	L.....1	62.02.3101	100 uH	Filter coil	TDK
	L.....2	62.99.0112	>1 mH	Filter coil	Tokin
	L.....3	1.022.246.00		Choke coil	St
	L.....4	62.99.0113	1 uH	Filter coil	Vo
	L.....5	62.99.0113	1 uH	Filter coil	Vo
	L.....6	62.99.0113	1 uH	Filter coil	Vo
	L.....7	62.99.0113	1 uH	Filter coil	Vo
	P.....1	54.14.2002	16 cont.	see note 3	
	Q.....1	50.03.0340	BC 337-25		ITT,NS,Ph,Sie
	Q.....2	50.03.0340	BC 337-25		ITT,NS,Ph,Sie

IND.	POS.NO.	PART NO.	VALUE	SPECIFICATIONS / EQUIVALENT	MANUF.
	Q.....3	50.03.0351	BC 327-25		ITT,Ph,Sie
	Q.....4	50.03.0351	BC 327-25		ITT,Ph,Sie
	Q.....5	50.03.0451	BD 139		Mot,Ph,SGS,Tf,To
	Q.....6	50.03.0451	BD 139		Mot,Ph,SGS,Tf,To
	Q.....7	50.03.0452	BD 140		Mot,Ph,SGS,Tf,To
	Q.....8	50.03.0452	BD 140		Mot,Ph,SGS,Tf,To
	Q.....9	50.03.0350	J 112		Mot
	Q.....10	50.03.0350	J 112		Mot
	Q.....11	50.03.0350	J 112		Mot
	Q.....12	50.03.0350	J 112		Mot
	Q.....13	50.03.1608	RFH 25N20	see note 4	IR
	Q.....14	50.03.1608	RFH 25N20	see note 4	IR
	Q.....15	50.03.1608	RFH 25N20	see note 4	IR
	Q.....16	50.03.1608	RFH 25N20	see note 4	IR
	R.....1	57.11.3101	100 Ohm	5%	
	R.....2	57.11.3753	75 kOhm	1%	
	R.....3	57.11.3242	2.4 kOhm	1%	
	R.....4	57.99.0199	680 Ohm	0.1%	
	R.....5	57.99.0250	6.8 kOhm	0.1%	
	R.....6	57.11.3273	27 kOhm	1%	
	R.....7	58.05.1103	10 kOhm	10%	
	R.....8	57.99.0199	680 Ohm	0.1%	
	R.....9	57.99.0250	6.8 kOhm	0.1%	
	R.....10	57.11.3332	3.3 kOhm	5%	
	R.....11	57.99.0250	6.8 kOhm	0.1%	
	R.....12	57.99.0250	6.8 kOhm	0.1%	
	R.....13	57.11.3152	1.5 kOhm	5%	
	R.....14	57.11.3152	1.5 kOhm	5%	
	R.....15	57.11.3472	4.7 kOhm	5%	
	R.....16	57.11.3101	100 Ohm	5%	
	R.....17	57.11.3101	100 Ohm	5%	
	R.....18	57.11.3100	10 Ohm	5%	
	R.....19	57.11.3100	10 Ohm	5%	
	R.....20	57.11.3159	1.5 Ohm	1%	
	R.....21	57.11.3159	1.5 Ohm	1%	
	R.....22	57.11.3159	1.5 Ohm	1%	

IND.	POS.NO.	PART NO.	VALUE	SPECIFICATIONS / EQUIVALENT	MANUF.
	R.....23	57.11.3159	1.5 Ohm	1%	
	R.....24	57.11.3159	1.5 Ohm	1%	
	R.....25	57.11.3159	1.5 Ohm	1%	
	R.....26	57.11.3159	1.5 Ohm	1%	
	R.....27	57.11.3159	1.5 Ohm	1%	
	R.....28	57.11.3159	1.5 Ohm	1%	
	R.....29	57.11.3159	1.5 Ohm	1%	
	R.....30	57.11.3159	1.5 Ohm	1%	
	R.....31	57.11.3159	1.5 Ohm	1%	
	R.....32	57.11.3159	1.5 Ohm	1%	
	R.....33	57.11.3159	1.5 Ohm	1%	
	R.....34	57.11.3159	1.5 Ohm	1%	
	R.....35	57.11.3159	1.5 Ohm	1%	
	R.....36	57.11.3159	1.5 Ohm	1%	
	R.....37	57.11.3159	1.5 Ohm	1%	
	R.....38	57.11.3159	1.5 Ohm	1%	
	R.....39	57.11.3159	1.5 Ohm	1%	
	R.....40	57.11.3159	1.5 Ohm	1%	
	R.....41	57.11.3159	1.5 Ohm	1%	
	R.....42	57.11.3159	1.5 Ohm	1%	
	R.....43	57.11.3159	1.5 Ohm	1%	
	R.....44	57.11.3159	1.5 Ohm	1%	
	R.....45	57.11.3159	1.5 Ohm	1%	
	R.....46	57.11.3159	1.5 Ohm	1%	
	R.....47	57.11.3159	1.5 Ohm	1%	
	R.....48	57.11.3159	1.5 Ohm	1%	
	R.....49	57.11.3159	1.5 Ohm	1%	
	R.....50	57.11.3105	1.0 MOhm	5%	
	R.....51	57.11.3105	1.0 MOhm	5%	
	R.....52	57.11.3105	1.0 MOhm	5%	
	R.....53	57.11.3105	1.0 MOhm	5%	
	R.....54	57.13.4229	2.2 Ohm	5%	
	R.....55	57.13.4229	2.2 Ohm	5%	
	R.....56	57.13.4229	2.2 Ohm	5%	
	R.....57	57.13.4229	2.2 Ohm	5%	
	R.....58	57.11.3164	160 kOhm	1%	

IND.	POS.NO.	PART NO.	VALUE	SPECIFICATIONS / EQUIVALENT	MANUF.
	T.....1	1.022.247.00		Impulse transformer	St
	T.....2	1.022.247.00		Impulse transformer	St
	TP....1	54.02.0320		Test point	
	TP....2	54.02.0320		Test point	
	TP....3	54.02.0320		Test point	

Note 1 - Connector 4 contacts:
AMP nr. 826848-3
AMP nr. 826848-1

Note 2 - Connector 2 contacts:
AMP nr. 826846-3

Note 3 - Connector 16 contacts:
Yamaichi nr. FAP-16-08-40SS
Burndy nr. 6PH 9 blo 800 GS
3M nr. 7616-6002 VZ

Note 4 - All power transistors must be from the same type and manufacturer.

Manufacturer: Ex=Exar, Fc=Fairchild, IR=International Rectifier, ITT=Intermetal, Mot=Motorola, NS=National Semiconductors, Ph=Philips (incl. Valvo), RCA=Radio Corporation of America, Ses=Sescosem, SuS=SGS/Ates, Sig=Signetics, Sie=Siemens, St=Studer, Tf=Telefunken, Tho=Thomson, To=Toshiba, Vo=Vogt & Co.

ORIG 88/03/28

BLOCK DIAGRAM
POWER FAIL SENSE BOARD 1.820.869

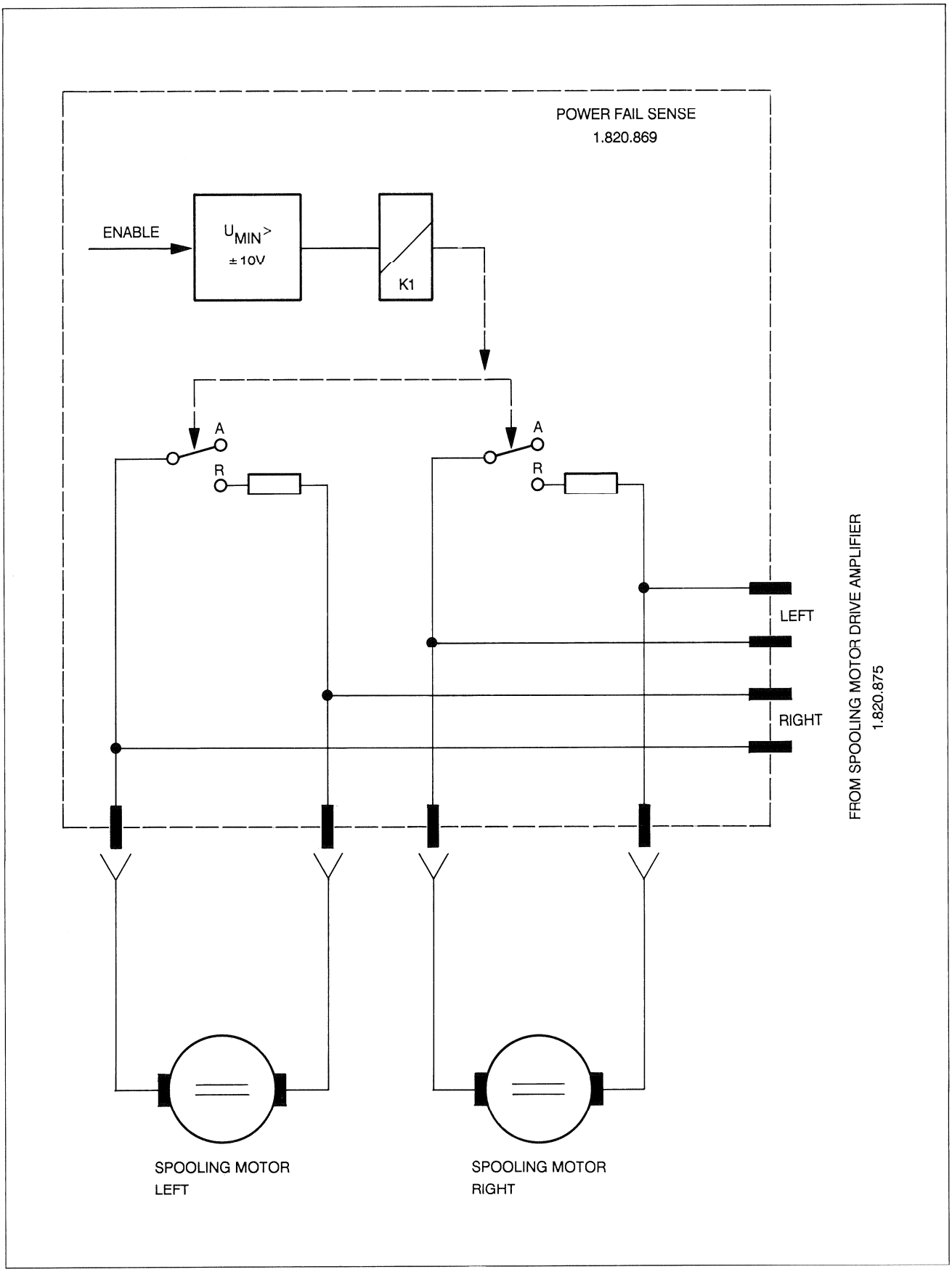

POWER FAIL SENSE BOARD 1.820.869.00

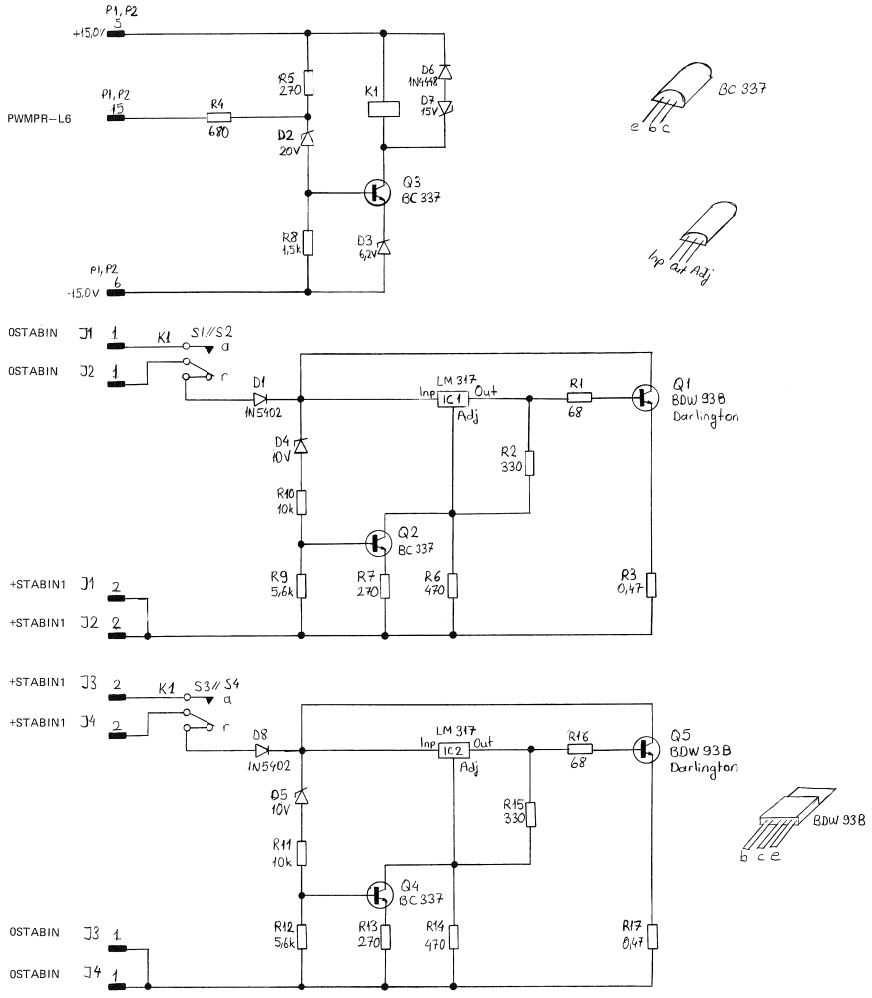

12.2.87 ND				
STUDER	POWER FAIL SENSE BOARD		1.820.869-00	PAGE 1 OF 1

POWER FAIL SENSE BOARD 1.820.869.00

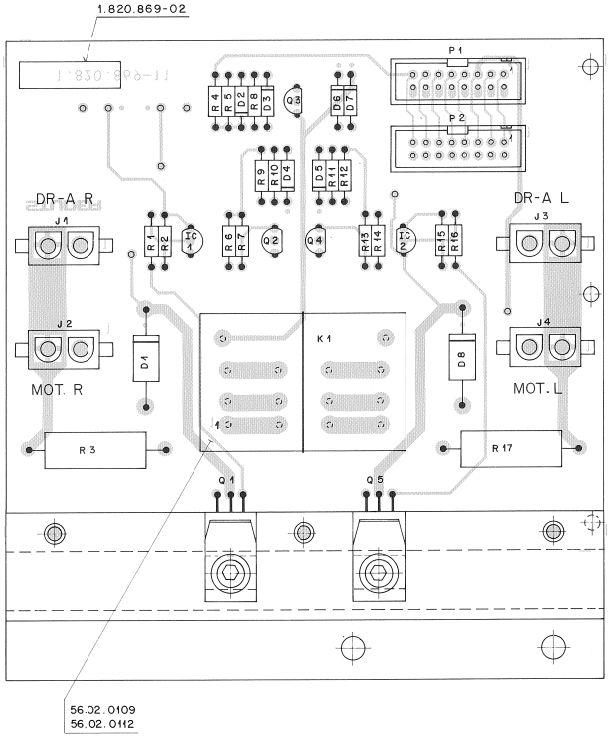

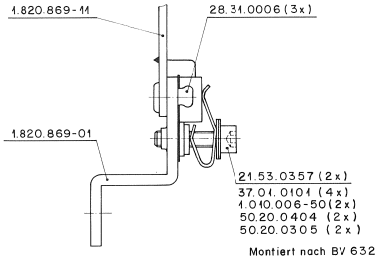

IND.	POS.NO.	PART NO.	VALUE	SPECIFICATIONS / EQUIVALENT	MANUF.
	C....1	59.03.2104	0.1 uF	10%, 250V, PETP	
	C....2	59.25.1221	220 uF	6.3V, El	
	J....1	54.25.0010		AMP nr. 926852-3	
	J....2	54.25.0010		AMP nr. 926852-3	
	J....3	54.25.0010		AMP nr. 926852-3	
	J....4			see note 1	
	J....5			see note 1	
	J....6	54.02.0332		AMP nr. 2-160 256 - 2	
	J....7			see note 1	
	P....1			see note 8	
	P....2			see note 8	
	P....3			see note 3	
	P....4			see note 4	
	P....5			see note 3	
	P....6			see note 5	
	P....7			see note 2	
	P....8			see note 3	
	P....9			see note 6	
	P...10	54.02.0416		Molex nr. 03-06-1241	
	P...11	54.01.0260		AMP nr. 163.690-1	
	P...12			see note 7	
(**)	END....				
	D....1	50.04.0507	1N 5402	1N 5403, MR 502RL	GI,Mot
	D....2	50.04.1109	20 V Z	BZX 55-C20	ITT,Mot,Ph,Tho,Tf
	D....3	50.04.1118	6.2 V Z	BZX 55-C6V2	ITT,Mot,Ph,Tho,Tf
(01)	D....3	50.04.1511	6.2 V Z	BZX 85-C6V2	ITT,Mot,Ph,Tf,SGS,Tho
	D....4	50.04.1114	10 V Z	BZX 55-C10	ITT,Mot,Ph,Tho,Tf
	D....5	50.04.1114	10 V Z	BZX 55-C10	ITT,Mot,Ph,Tho,Tf

IND.	POS.NO.	PART NO.	VALUE	SPECIFICATIONS / EQUIVALENT	MANUF.
	D....6	50.04.0125	1N 4448		Fc,ITT,Ph,See,Tf
	D....7	50.04.1119	15 V Z	BZX 55-C15	ITT,Mot,Ph,Tho,Tf
	D....8	50.04.0507	1N 5402	1N 5403, MR 502RL	GI,Mot
	IC...1	50.10.0108	LM 317 LZ		Mot,Nat
	IC...2	50.10.0108	LM 317 LZ		Mot,Nat
	J....1	54.25.0002		see note 1	
	J....2	54.25.0002		see note 1	
	J....3	54.25.0002		see note 1	
	J....4	54.25.0002		see note 1	
	K....1	56.02.0108	24 V DC	Ly 4	Omron
	P....1	54.14.2002		see note 2	
	P....2	54.14.2002		see note 2	
	Q....1	50.03.0512	BD 899 A	BDW 93 B	Mot,SGS
	Q....2	50.03.0340	BC 337-25		ITT,NS,Ph,Sie
	Q....3	50.03.0340	BC 337-25		ITT,NS,Ph,Sie
	Q....4	50.03.0340	BC 337-25		ITT,NS,Ph,Sie
	Q....5	50.03.0512	BD 899 A	BDW 93 B	Mot,SGS
	R....1	57.11.4680	68 Ohm	5%	
	R....2	57.11.4331	330 Ohm	5%	

IND.	POS.NO.	PART NO.	VALUE	SPECIFICATIONS / EQUIVALENT	MANUF.
	R....3	57.56.5478	0.47 Ohm	10% 4 Watt	
	R....4	57.11.4681	680 Ohm	5%	
	R....5	57.11.4271	270 Ohm	5%	
	R....6	57.11.4471	470 Ohm	5%	
	R....7	57.11.4271	270 Ohm	5%	
	R....8	57.11.4152	1.5 kOhm	5%	
	R....9	57.11.4562	5.6 kOhm	5%	
	R...10	57.11.4103	10 kOhm	5%	
	R...11	57.11.4103	10 kOhm	5%	
	R...12	57.11.4562	5.6 kOhm	5%	
	R...13	57.11.4271	270 Ohm	5%	
	R...14	57.11.4471	470 Ohm	5%	
	R...15	57.11.4391	330 Ohm	5%	
	R...16	57.11.4680	68 Ohm	5%	

IND.	POS.NO.	PART NO.	VALUE	SPECIFICATIONS / EQUIVALENT	MANUF.
		8 pins:	Studer nr.	54.25.0402	
			AMP nr.	926899-1	
		1 pin :	Studer nr.	54.25.0401	
			AMP nr.	926887-1	
	Note 7 - Connector,10 contacts:				
		case:	Studer nr.	54.25.0310	
			AMP nr.	926302-3	
		6 pins:	Studer nr.	54.25.0402	
			AMP nr.	926899-1	
		1 pin :	Studer nr.	54.25.0401	
			AMP nr.	926887-1	
	Note 8 - Connector,10 contacts:				
		case:	Studer nr.	54.14.2001	
			Yamaichi nr.	FAP-10-08-40SS	
			Burndy nr.	BFH 9 B10 B00 GS	
			3M nr.	7610-6002 VZ	

(01) 24.02.89 Improved operating temperature.

Note 1 - Connector, 2 contacts: AMP Nr. 826846-3

Note 2 - Connector,26 contacts: Yamaichi Nr. FAP-16-08-40SS
Burndy Nr. BFH 9 B16 B00 GS
3M Nr. 7616-6002 VZ

MANUFACTURER: Fc=Fairchild; GI=General Instruments; ITT=Intermetal; Mot=Motorola; Nat=National; NS=National Semiconductors; Ph=Philips; Sse=Sescosem; SGS=SGS\Ates; Sie=Siemens; Tf=Telefunken; Tho=Thomson

ORIG 88/01/21 (00) 87/04/02 (01) 89/02/24

Note 4 - Connector, 8 contacts:
case: Studer nr. 54.25.0308
AMP nr. 926301-3
pin: Studer nr. 54.25.0402
AMP nr. 926899-1

Note 5 - Connector,10 contacts:
case: Studer nr. 54.25.0310
AMP nr. 926302-3
pin: Studer nr. 54.25.0402
AMP nr. 926899-1

Note 6 - Connector,10 contacts:
case: Studer nr. 54.25.0310
AMP nr. 926302-3

PETP = Polyesterfilm, El = Electrolytic.

Note 1 - Connector, 8 Contacts:
case: Studer nr. 54.20.0025
Neutrik nr. TI 8
pin: Studer nr. 54.20.0011
Neutrik nr. CS 1g

Note 2 - Connector, 2 Contacts:
case: Studer nr. 54.25.0302
AMP nr. 350777-1
pin: Studer nr. 54.25.0402
AMP nr. 926899-1

Note 3 - Connector, 4 Contacts:
case: Studer nr. 54.25.0304
AMP nr. 926298-3, 926298-1
pin: Studer nr. 54.25.0402
AMP nr. 926899-1

BLOCK DIAGRAM
CAPSTAN CONTROL UNIT 1.820.764

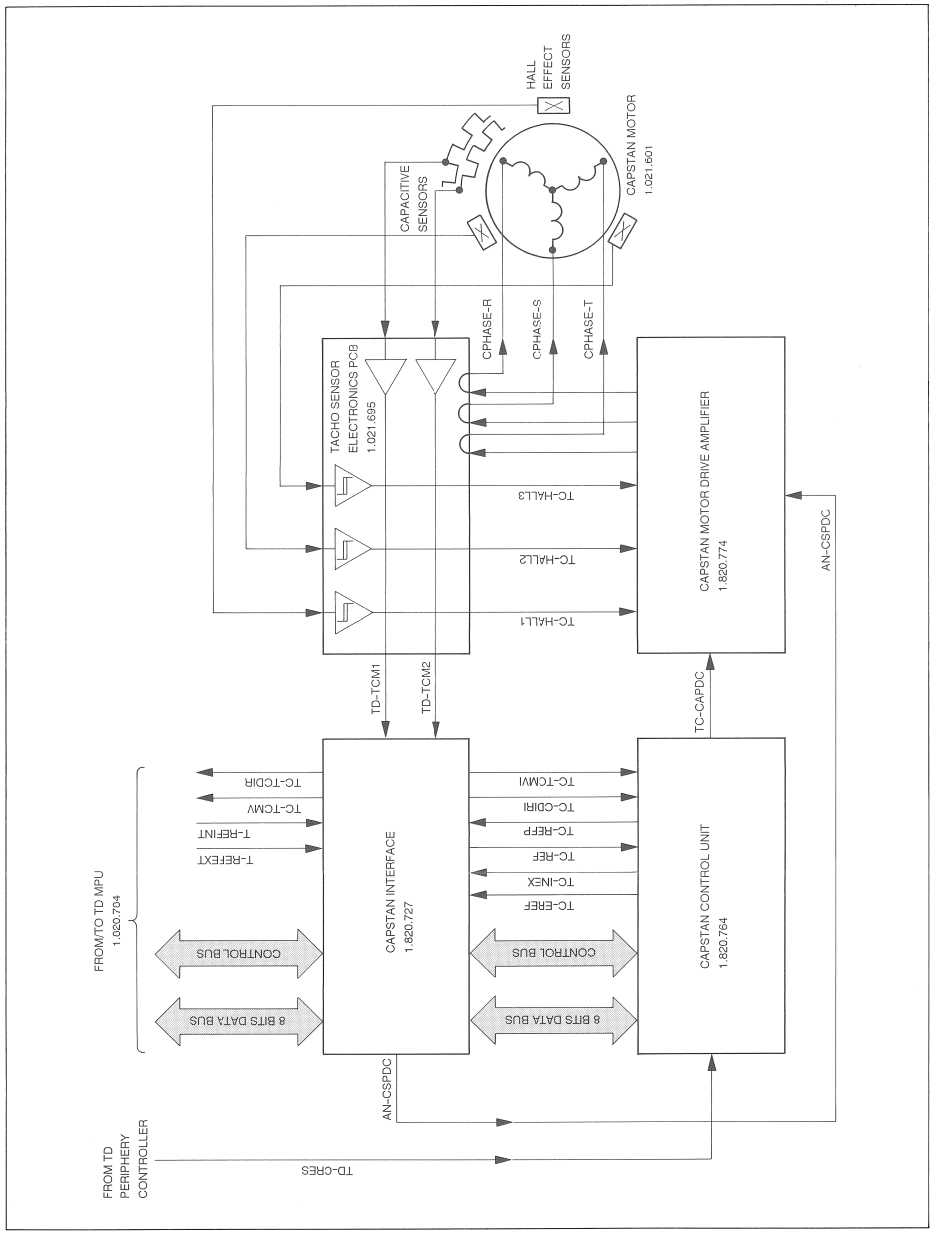

BLOCK DIAGRAM
CAPSTAN CONTROL UNIT 1.820.764

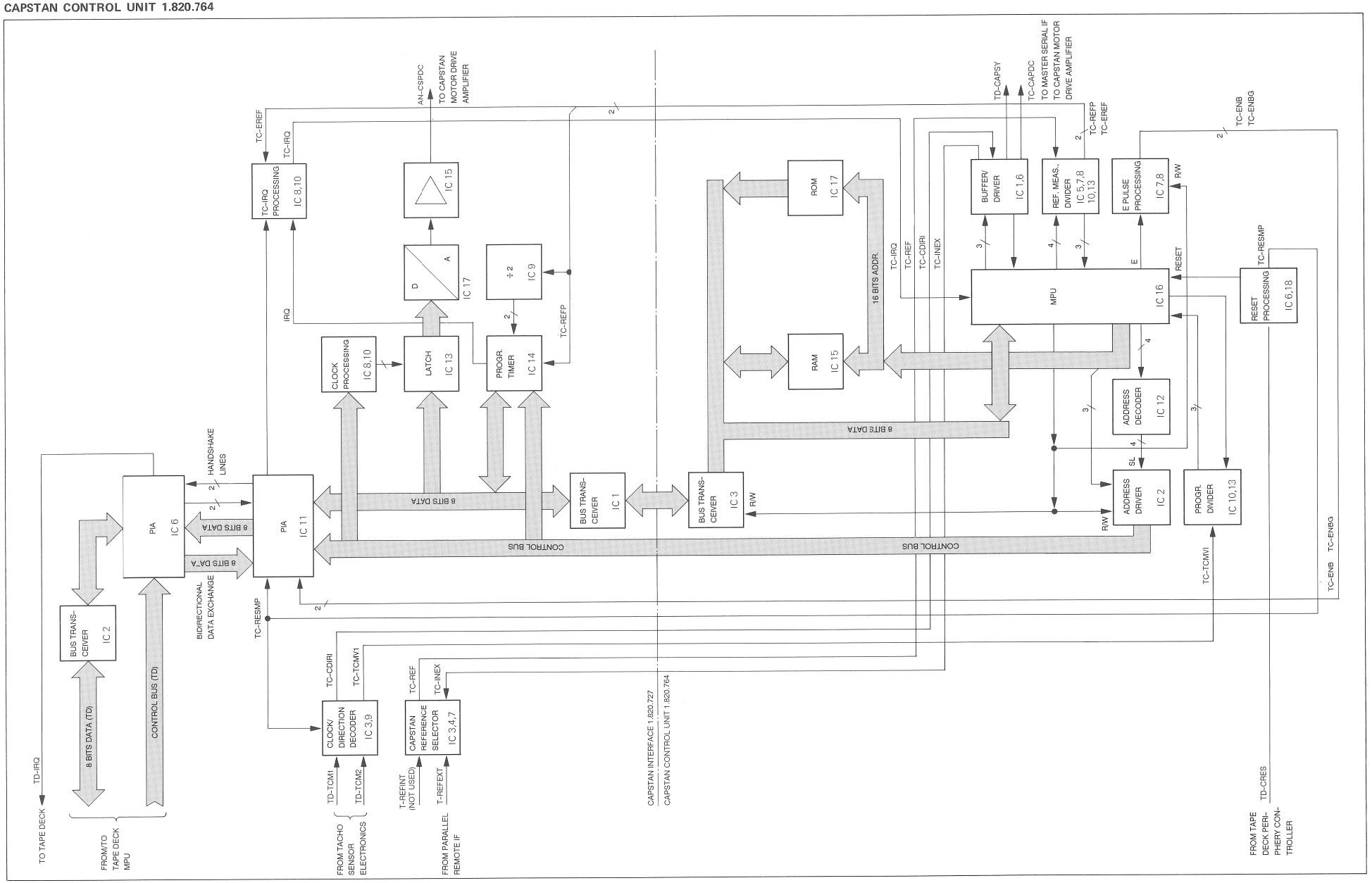

CAPSTAN CONTROL UNIT 1.820.764.22

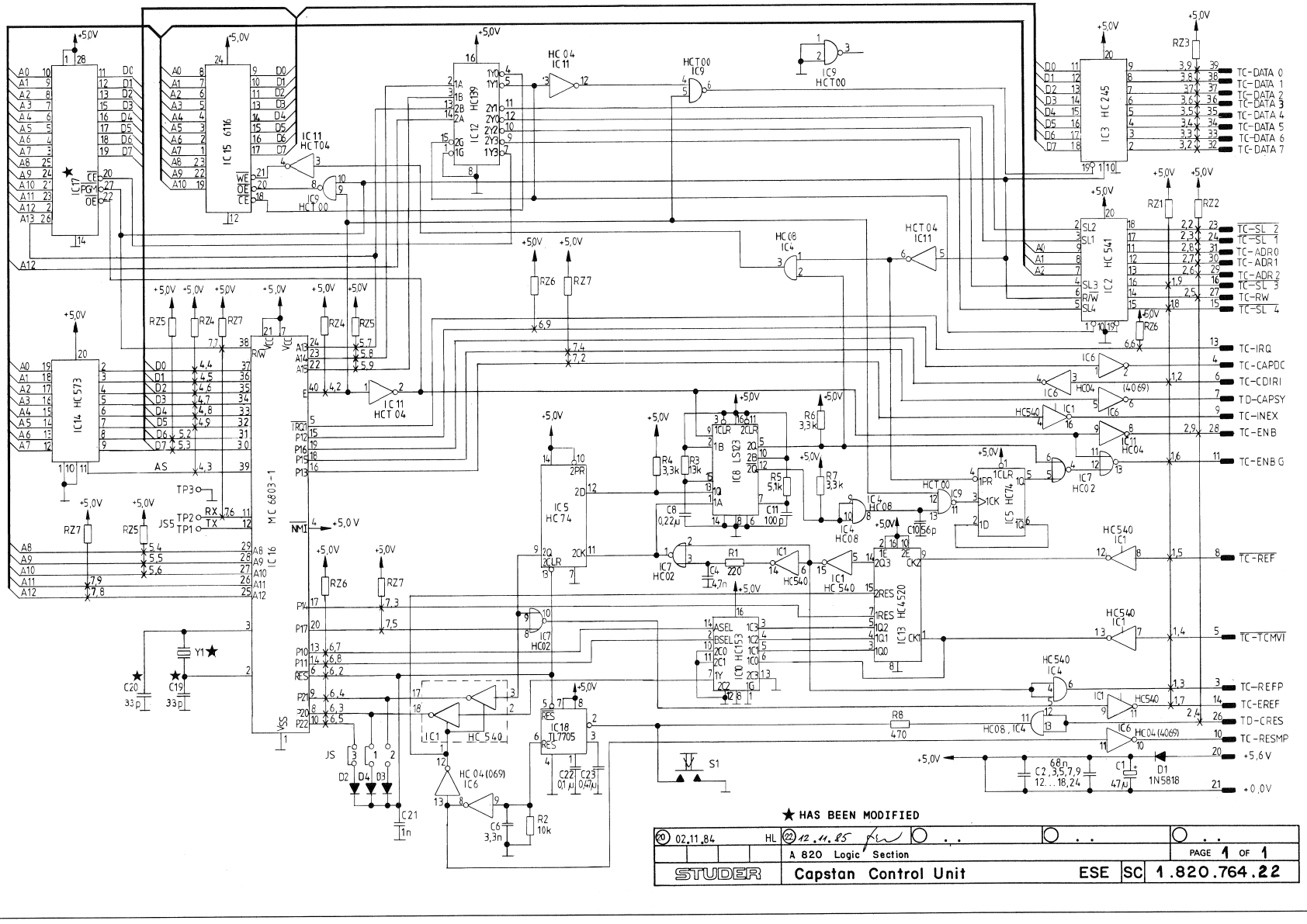

CAPSTAN CONTROL UNIT 1.820.764.22

Schilder 43.01.0108
und 1.101.001.XX
aufgeklebt nach
Fabrikationsmuster

IND.	POS.NO.	PART NO.	VALUE	SPECIFICATIONS / EQUIVALENT	MANUF.
(20)	C.....1	59.26.0470	47 uF	20%, 6.3V	Ph
(20)	C.....2	59.06.0583	68 nF	20%	
(20)	C.....3	59.06.0683	68 nF	20%	
(20)	C.....4	59.32.2472	4.7 nF	10%	
(20)	C.....5	59.06.0683	68 nF	20%	
(20)	C.....6	59.32.2332	3.3 nF	10%	
(20)	C.....7	59.06.0683	68 nF	20%	
(20)	C.....8	59.06.5224	220 nF	5%	
(20)	C.....9	59.06.0583	68 nF	20%	
(20)	C.....10	59.15.4560	56 pF	10%	
(20)	C.....11	59.35.1101	100 pF	1%	
(20)	C.....12	59.06.0683	68 nF	20%	
(20)	C.....13	59.06.0583	68 nF	20%	
(20)	C.....14	59.06.0583	68 nF	20%	
(20)	C.....15	59.06.0583	68 nF	20%	
(20)	C.....16	59.06.0583	68 nF	20%	
(20)	C.....17	59.06.0583	68 nF	20%	
(20)	C.....18	59.06.0583	68 nF	20%	
(20)	C.....19	59.45.1150	15 pF	5%	
(20)	C.....19	59.45.2330	33 pF	5%	
(20)	C.....20	59.45.2150	15 pF	5%	
(20)	C.....20	59.45.2330	33 pF	5%	
(20)	C.....21	59.36.4102	1 nF	20%	
(20)	C.....22	59.36.0104	100 nF	10%	
(20)	C.....23	59.06.0674	470 nF	10%	
(20)	C.....24	59.06.0583	68 nF	20%	
(20)	D.....1	50.04.0512	1N 5818	1N 5819	Mot
(20)	D.....2	50.04.0125	1N 4448		ITT,Ph,Sas,TI
(20)	D.....3	50.04.0125	1N 4448		ITT,Ph,Sas,TI
(20)	D.....4	50.04.0125	1N 4448		ITT,Ph,Sas,TI
(20)	IC.....1	50.17.1543	74 HC 540		Ph,Mot,NS,RCA,To,TI
(20)	IC.....2	50.17.1541	74 HC 541		Ph,Mot,NS,RCA,To,TI
(20)	IC.....3	50.17.1245	74 HC 245		Mot,Ph,RCA,To,TI
(20)	IC.....4	50.17.1009	74 HC 08		Ph,Mot,NS,RCA,To,TI
(20)	IC.....5	50.17.1074	74 HC 74		Ph,Mot,NS,RCA,To,TI

IND.	POS.NO.	PART NO.	VALUE	SPECIFICATIONS / EQUIVALENT	MANUF.
(20)	IC.....6	50.17.1004	74 HC 04		Ph,Mot,NS,RCA,To,TI
(20)	IC.....7	50.17.1002	74 HC 02		Ph,Mot,NS,RCA,To,TI
(20)	IC.....8	50.30.0123	74 LS 123		Mot,TI
(20)	IC.....9	50.17.1000	74 HC 00		Ph,Mot,NS,RCA,To,TI
(20)	IC.....10	50.17.1153	74 HC 153		Mot,Ph,RCA,To,TI
(20)	IC.....11	50.17.0004	74 HCT 04		Ph,NS,RCA
(20)	IC.....12	50.17.1139	74 HC 139		Ph,Mot,NS,RCA,SGS,To,TI
(20)	IC.....13	50.37.0520	4520 BPC	HEF 4520	Ph,Fc
(20)	IC.....14	50.17.1573	74 HC 573		Ph,Mot,NS,RCA,To,TI
(20)	IC.....15	50.14.0127	HM6116AP-3	MSM5128-15	Hi,OKI
(20)	IC.....16	50.16.0107	MC6803G-1	HD6803P-L	Hi,Mot
(20)	IC.....17			see note 1	
(20)	IC.....17	1.820.994.20		Software 13/85, Capstan Control	St
(21)	IC.....17	1.820.994.21		Software 35/85, Capstan Control	St
(22)	IC.....17	1.820.994.22		Software 36/86, Capstan Control	St
(24)	IC.....17	1.820.994.23		Software 17/87, Capstan Control	St
(25)	IC.....17	1.820.994.24		Software 22/88, Capstan Control	St
(26)	IC.....17	1.820.994.25		Software 35/88, Capstan Control	St
(20)	IC.....18	50.11.0122	IL7705ACP		TI
(20)	JS.....1			see note 2	
(20)	JS.....2			see note 2	
(20)	JS.....3			see note 2	
(20)	FP.....1			see note 2	
(20)	FP.....2			see note 2	
(20)	TP.....3	54.32.0320		Testpoint	
(20)	R.....1	57.11.4221	220 Ohm	2%	
(23)	R.....2	57.11.4103	10 kOhm	10%	
(20)	R.....3	57.11.3133	13 kOhm	2%	
(20)	R.....4	57.11.4332	3.3 kOhm	10%	
(20)	R.....5	57.11.3512	5.1 kOhm	2%	
(20)	R.....6	57.11.4332	3.3 kOhm	10%	
(20)	R.....7	57.11.4332	3.3 kOhm	10%	
(20)	R.....8	57.11.4471	470 Ohm	10%	

IND.	POS.NO.	PART NO.	VALUE	SPECIFICATIONS / EQUIVALENT	MANUF.
(23)	RZ.....1	57.88.4103		Network 8 * 10 kOhm (old part 1.010.014.57)	
(23)	RZ.....2	57.88.4103		Network 8 * 10 kOhm (old part 1.010.014.57)	
(20)	RZ.....3	57.88.4103		Network 8 * 10 kOhm (old part 1.010.014.57)	
(20)	RZ.....4	57.88.4332		Network 8 * 3.3 kOhm	
(23)	RZ.....5	57.88.4332		Network 8 * 3.3 kOhm	
(20)	RZ.....6	57.88.4103		Network 8 * 10 kOhm (old part 1.010.014.57)	
(23)	RZ.....7	57.88.4332		Network 8 * 3.3 kOhm	
(20)	S.....1	55.03.0122		Switch impuls. see note 3	
(20)	Y.....1	89.01.0553		4.9152 MHz, TO18	
(22)	Y.....1	89.01.0560		4.9152 MHz, +- 20 ppm.	

IND.	POS.NO.	PART NO.	VALUE	SPECIFICATIONS / EQUIVALENT	MANUF.

(21) 12.08.85 Software 35/85 (EPROM lok * 8)

(22) 12.11.85 Improved quartz accuracy.

(23) 18.04.86 Software 36/86

(24) 24.04.87 Software 17/87

(25) 10.06.88 Software 22/88

(26) 31.08.88 Software 35/88

Note 1 - IC 17, for Software 13/85 only:

	Studer	50.14.0113
	Hitachi	HN 482764 G-3
	Intel	D 2764-3
	SGS/Ates	M 2764 F 1
	Texas Instruments	TMS 2764-25 JL

for Software 35/85 and future versions:

	Studer	50.14.0125
	Fujitsu	MBM 27128-30
	Hitachi	HN 4827128 G-25/HN 4827128 G-30
	Intel	27128 250ns

Note 2 - Contact pin:

	Studer	54.01.0020
	Berg	75 160-102-36
	Philips	2422 025 89303
bridge:	Studer	54.01.0021
	Berg	65 474-001
	Philips	2422 024 88003

Note 3 - switch impuls: Chicago Switch 34-550-001

MANUFACTURER: Fc=Fairchild, ITT=Intermetall, Hi=Hitachi,
Mot=Motorola, NS=National Semiconductors,

IND.	POS.NO.	PART NO.	VALUE	SPECIFICATIONS / EQUIVALENT	MANUF.

OKI=OKI Semiconductors, Ph=Philips,
RCA=Radio Corporation of America, Sas=Sescosem,
SGS=SGS-Ates, St=Studer, TI=Texas Instruments,
To=Toshiba.

OKI: 85/05/10 (20) 85/06/10 (21) 85/06/12 (22) 85/11/12 (23) 86/09/18
(24) 87/04/24 (25) 88/06/10 (26) 88/08/31

CAPSTAN INTERFACE 1.820.727.00

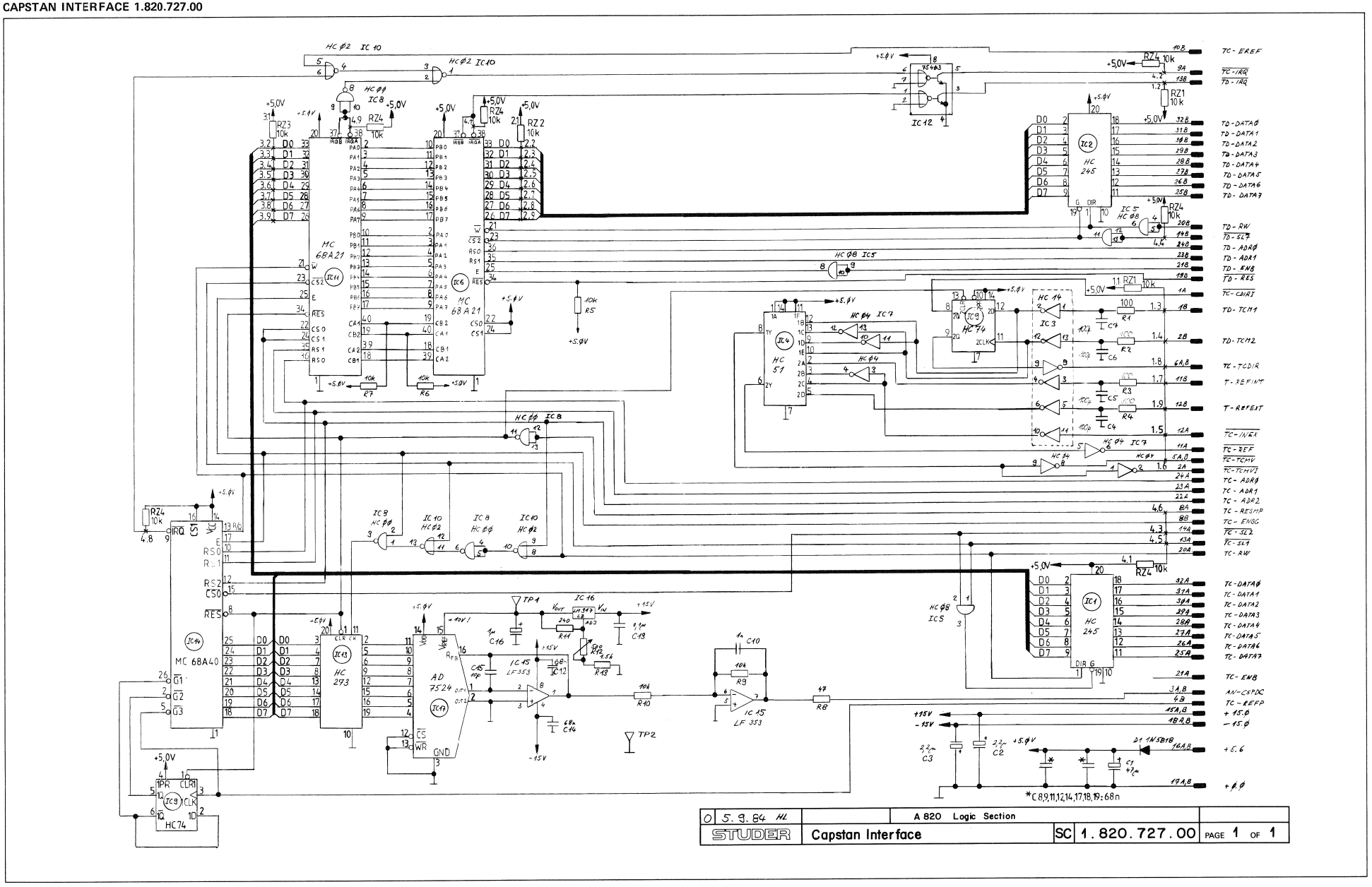

0 5.9.84 HL		A 820 Logic Section		
STUDER	Capstan Interface	SC	1.820.727.00	PAGE 1 OF 1

CAPSTAN INTERFACE 1.820.727.00

COMPONENT SIDE

CAPSTAN INTERFACE 4.820.727-00

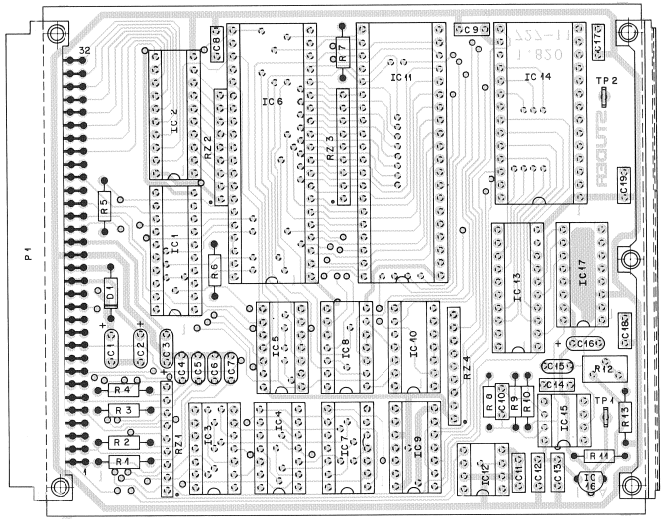

IND.	POS.NO.	PART NO.	VALUE	SPECIFICATIONS / EQUIVALENT	MANUF.
	C.....1	59.26.0470	47 uF	20%, 6.3V	Ph
	C.....2	59.26.5229	2.2 uF	20%, 16V	Ph
	C.....3	59.26.5229	2.2 uF	20%, 16V	Ph
	C.....4	59.45.4101	100 pF	20%	Ph
	C.....5	59.45.4101	100 pF	20%	Ph
	C.....6	59.45.4101	100 pF	20%	Ph
	C.....7	59.45.4101	100 pF	20%	Ph
	C.....8	59.06.0683	68 nF	20%	Sie
	C.....9	59.06.0683	68 nF	20%	Sie
	C.....10	59.32.4102	1 nF	20%	Ph
	C.....11	59.06.0683	68 nF	20%	Sie
	C.....12	59.06.0683	68 nF	20%	Sie
	C.....13	59.06.0104	100 nF	20%	Sie
	C.....14	59.06.0683	68 nF	20%	Sie
	C.....15	59.45.1100	10 pF	10%	Ph
	C.....16	59.26.9109	1 uF	20%, 16V	Ph
	C.....17	59.06.0683	68 nF	20%	Sie
	C.....18	59.06.0683	68 nF	20%	Sie
	C.....19	59.06.0683	68 nF	20%	Sie
	D.....1	50.04.0512	1N 5818	1N 5819	Mot
	IC.....1	50.17.1245	74 HC 245		Mot+Nat+To+Ph+RCA+TI
	IC.....2	50.17.1245	74 HC 245		Mot+Nat+To+Ph+RCA+TI
	IC.....3	50.17.1014	74 HC 14		Mot+NS+To+Ph+RCA+TI
	IC.....4	50.17.1051	74 HC 51		Mot+Nat+To+Ph+RCA+TI
	IC.....5	50.17.1008	74 HC 08		Mot+NS+To+Ph+RCA+TI
	IC.....6	50.16.0106	MC68A21P	F68A21PC	Mot+AMI+Fc
	IC.....7	50.17.1004	74 HC 04		Mot+NS+To+Ph+RCA+TI
	IC.....8	50.17.1000	74 HC 00		Mot+NS+To+Ph+RCA+TI
	IC.....9	50.17.1074	74 HC 74		Mot+NS+To+Ph+RCA+TI
	IC.....10	50.17.1002	74 HC 02		Mot+Nat+To+Ph+RCA+TI
	IC.....11	50.16.0106	MC68A21P	F68A21PC	Mot+AMI+Fc
	IC.....12	50.05.0203	SN75463P	DS3613N	TI+NS
	IC.....13	50.17.1273	74 HC 273		Mot+NS+To+Ph+RCA+TI
	IC.....14	50.16.0113	MC6840	HD6840	Mot+Hi
	IC.....15	50.09.0101	TL072CP	LF353N	TI+NS

IND.	POS.NO.	PART NO.	VALUE	SPECIFICATIONS / EQUIVALENT	MANUF.
	IC.....16	50.10.0108	LM 317 LZ		Nat+Mot
	IC.....17	50.07.0002	AD7524JN		ADI+MPS
	P.....1	54.11.2004		Plug see note 1	
	R.....1	57.11.4101	100 Ohm	10%	
	R.....2	57.11.4101	100 Ohm	10%	
	R.....3	57.11.4101	100 Ohm	10%	
	R.....4	57.11.4101	100 Ohm	10%	
	R.....5	57.11.4103	10 kOhm	10%	
	R.....6	57.11.4103	10 kOhm	10%	
	R.....7	57.11.4103	10 kOhm	10%	
	R.....8	57.11.4470	47 Ohm	10%	
	R.....9	57.11.4103	10 kOhm	5%	
	R.....10	57.11.4103	10 kOhm	5%	
	R.....11	57.11.3241	240 Ohm	10%	
	R.....12	58.05.0501	500 Ohm	Potentiometer, see note 2	
	R.....13	57.11.4152	1.5 kOhm	10%	
	R/.....1	1.010.014.57	8910 kOhm	10%	
	R/.....2	1.010.014.57	8910 kOhm	10%	
	R/.....3	1.010.014.57	8910 kOhm	10%	
	R/.....4	1.010.014.57	8910 kOhm	10%	
	TP.....1	54.02.0320		Testpoint	
	TP.....2	54.02.0320		Testpoint	

IND.	POS.NO.	PART NO.	VALUE	SPECIFICATIONS / EQUIVALENT	MANUF.

Note 1 - Plug : 2 x 32 Euro board
Burndy PT 64 B 20 P00 F00 Z0
Erni 9722.563.191

Note 2 - Potentiometer : 500 Ohm, 10%, .5W, PMC
Bourns 3296 Z - 1 - 501
Spectrol 64 Z 501 T 000

Manufacturer: ADI=Analog Devices Inc., AMI=American Microsystem Inc.,
Fc=Fairchild, Hi=Hitachi, Mot=Motorola,
MPS=Micro Power Systems, Nat=National (Matsushita),
NS=National Semiconductors, Ph=Philips (incl. Valve),
RCA=Radio Corporation of America, TI=Texas Instruments,
To=Toshiba.

ORIG 84/09/05

BLOCK DIAGRAM
CAPSTAN MOTOR DRIVE AMPLIFIER PCB 1.820.774

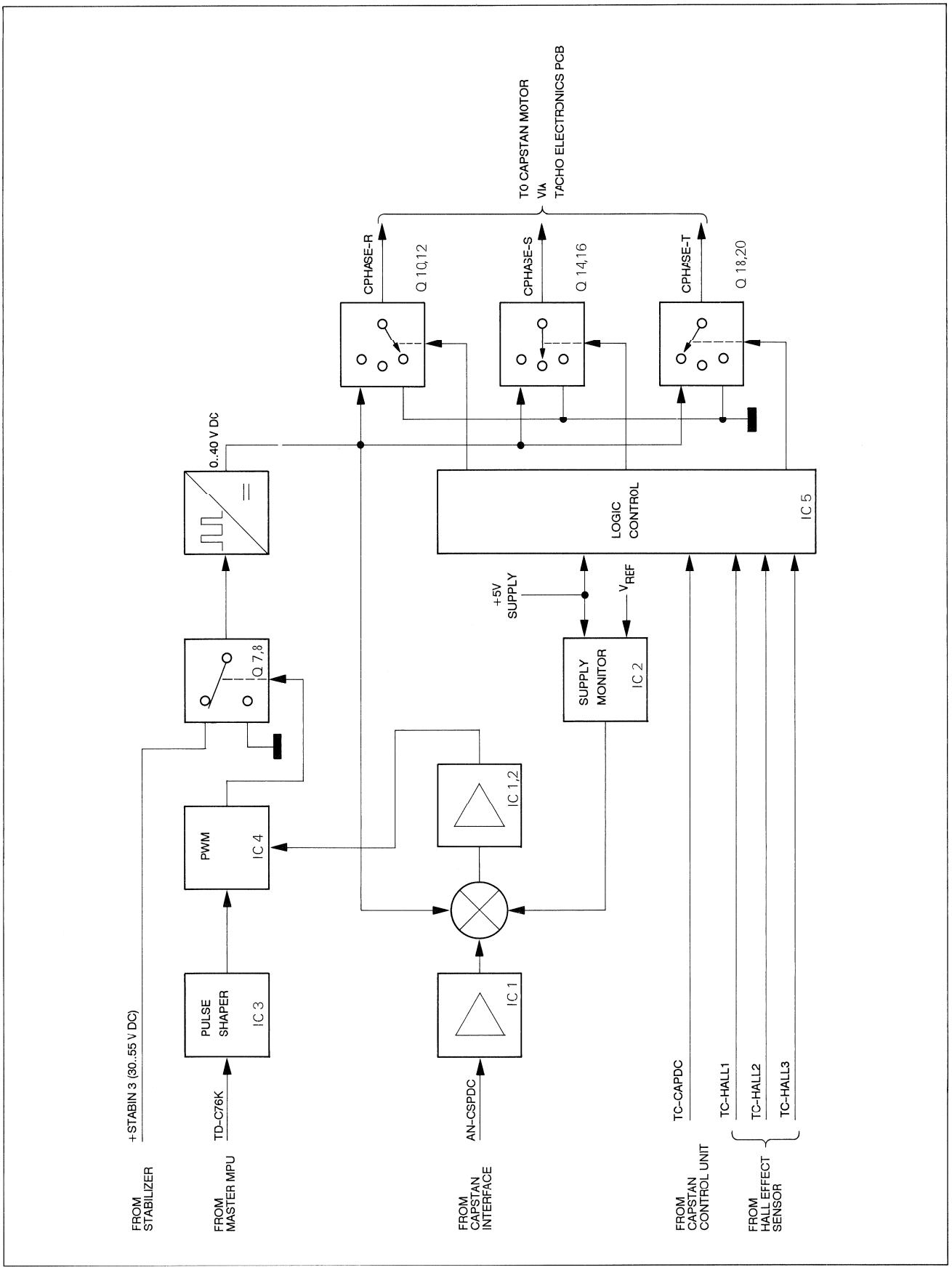

CAPSTAN MOTOR DRIVE AMPLIFIER PCB 1.820.774.24

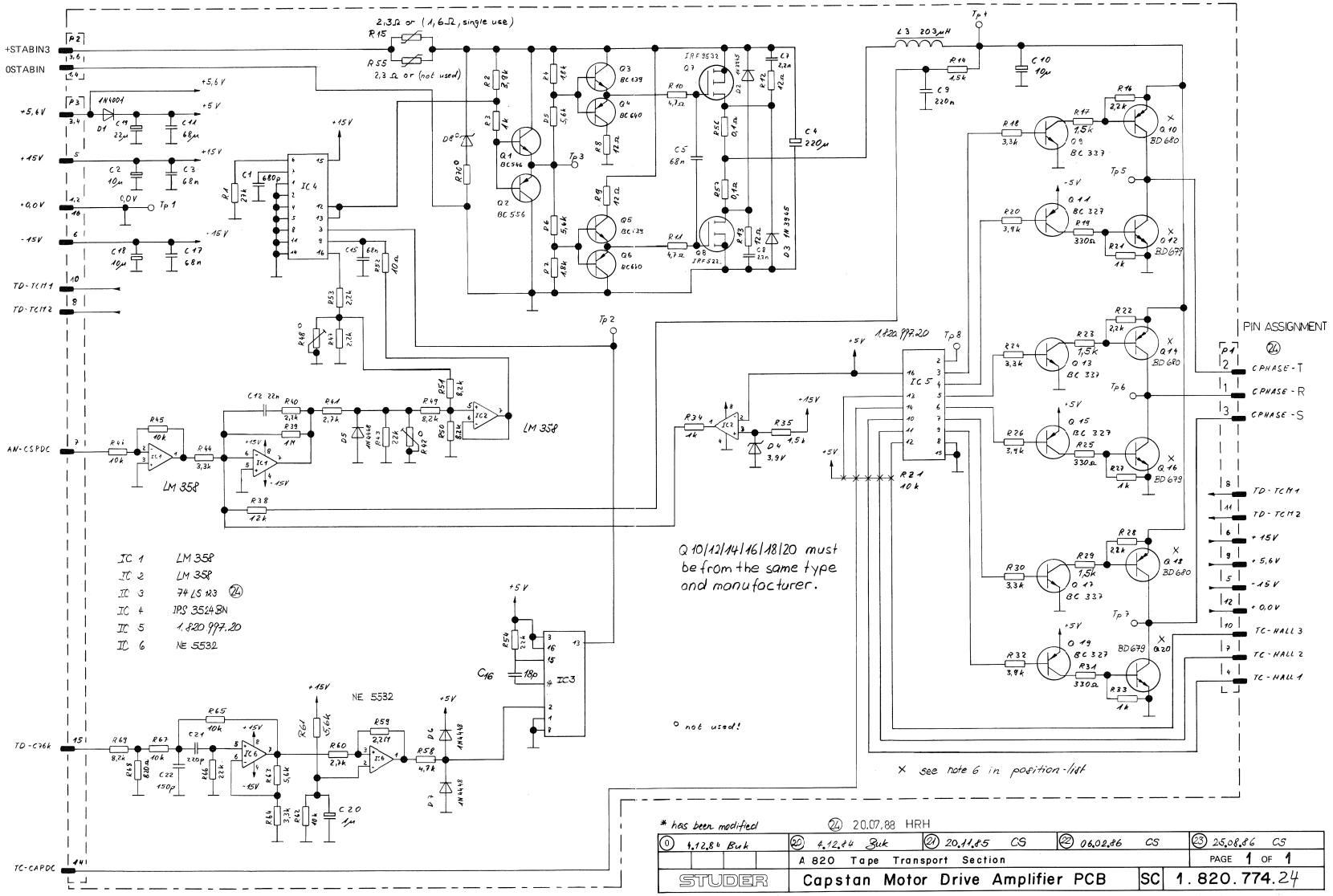

CAPSTAN MOTOR DRIVE AMPLIFIER PCB 1.820.774.24

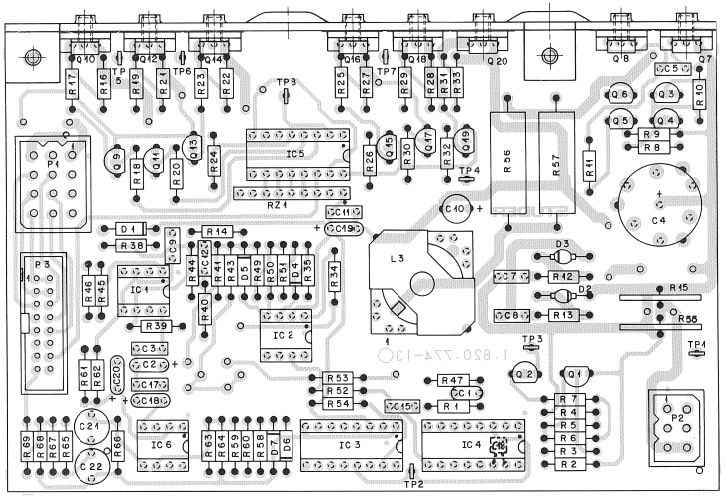

IND.	POS.NO.	PART NO.	VALUE	SPECIFICATIONS / EQUIVALENT	MANUF.
(20)	C....1	59.32.2681	680 pF	10%, Ce	
(20)	C....2	59.26.2100	10 uF	20%, 15V, El	
(20)	C....3	59.06.0683	68 nF	10%, PETP	
(20)	C....4	59.22.9221	220 uF	-20%,+100%, 40V, El	
(20)	C....5	59.06.0683	68 nF	10%, PETP	
(20)	C....7	59.06.0222	2200 pF	10%, 100V, PETP	
(20)	C....8	59.06.0222	2200 pF	10%, 100V, PETP	
(20)	C....9	59.06.5224	220 nF	10%, PETP	
(20)	C....10	59.22.8100	10 uF	-20%, 63V, El	
(20)	C....11	59.06.0683	68 nF	10%, PETP	
(20)	C....12	59.06.0223	22 nF	10%, PETP	
(20)	C....13	59.06.0683	68 nF	10%, PETP	
(20)	C....16	not used			
(22)	C....16	59.34.1180	18 pF	5%, Ce	
(20)	C....17	59.06.0683	68 nF	10%, PETP	
(20)	C....18	59.26.2100	10 uF	20%, 16V, El	
(20)	C....19	59.26.1220	22 uF	20%, 10V, El	
(20)	C....20	59.22.8109	1 uF	-20%, 15V, El	
(20)	C....21	59.05.1221	220 pF	2.5%, PP	
(20)	C....22	59.05.2151	150 PF	2.5%, PP	
(20)	D....1	50.04.0122	1N 4001	to 4004	ITT,Mot
(20)	D....2	50.04.0508	1N 4935	1N 4936, RG 1 D, A 114 B	Mot,GI
(20)	D....3	50.04.0508	1N 4935	1N 4936, RG 1 D, A 114 B	Mot,GI
(20)	D....4	50.04.1101	3.9 V Z	BZX 83C 3V9, BZX 55C 3V9, /PD 3.9	ITT,Ses
(20)	D....5	50.04.0125	1N 4448		Fc,ITT,Ph,Ses,Tf
(20)	D....6	50.04.0125	1N 4448		Fc,ITT,Ph,Ses,Tf
(20)	D....7	50.04.0125	1N 4448		Fc,ITT,Ph,Ses,Tf
(20)	D....8	not used		(High voltage protection)	
(20)	IC....1	50.05.0286	LM 358 N	LM 358 P	NS,Mot,TI
(20)	IC....2	50.05.0286	LM 358 N	LM 358 P	NS,Mot,TI
(20)	IC....3	50.17.1123	74 HC 123	..74 HC 123 .. Mot,NS,Ph,RCA,SGS,Tl,To	
(21)	IC....3	50.06.0123	74 LS 123	..74 LS 123 ..	Mot,TI
(22)	IC....3	50.17.1123	74 HC 123	..74 HC 123 .. Mot,NS,Ph,RCA,SGS,Tl,To	
(20)	IC....4	50.05.0279	SG 3524BN		SG
(22)	IC....4	50.05.0279	IPS3524BN		IPS

IND.	POS.NO.	PART NO.	VALUE	SPECIFICATIONS / EQUIVALENT	MANUF.
(00)	IC....5	50.05.0206	N 82S123N	63 S 081 J	AMI,Sig
(20)	IC....5	1.820.997.20		Commutation logic device	St
(20)	IC....6	50.09.0105	NE 5532 N	XR 5532 N, RC 532 NB	Ex,Ra,Sig
(20)	L....3	1.022.251.00		Filtercoil	St
(20)	P....1		12 cont.	see Note 1	
(20)	P....2		6 cont.	see Note 2	
(20)	P....3	54.14.2002	16 cont.	see Note 3	
(20)	Q....1	50.03.0491	BC 546B		ITT,Mot,Ph,Sie
(20)	Q....2	50.03.0492	BC 556B		ITT,Mot,Ph,Sie
(20)	Q....3	50.03.0551	BC 639		Mot,Ph
(20)	Q....4	50.03.0626	BC 640		Mot,Ph
(20)	Q....5	50.03.0551	BC 639		Mot,Ph
(20)	Q....6	50.03.0626	BC 640		Mot,Ph
(20)	Q....7	50.03.1552	IRF 9532	MTP 8P10	IR,Mot
(20)	Q....8	50.03.1502	IRF 522	MTP 8N10	IR,Mot
(20)	Q....9	50.03.0340	BC 337-25		ITT,NS,Ph,Sie
(20)	Q....10	50.03.0513	BD 900 A	BDW 94 3, see note 6	Mot,SGS
(20)	Q....11	50.03.0351	BC 327-25		ITT,Ph,Sie
(20)	Q....12	50.03.0520	BU 522	see note 6	Mot
(20)	Q....13	50.03.0340	BC 337-25		ITT,NS,Ph,Sie
(20)	Q....14	50.03.0513	BD 900 A	BDW 94 3, see note 6	Mot,SGS
(20)	Q....15	50.03.0351	BC 327-25		ITT,Ph,Sie
(20)	Q....16	50.03.0520	BU 522	see note 6	Mot
(20)	Q....17	50.03.0340	BC 337-25		ITT,NS,Ph,Sie
(20)	Q....18	50.03.0513	BD 900 A	BDW 94 3, see note 6	Mot,SGS
(20)	Q....19	50.03.0351	BC 327-25		ITT,Ph,Sie
(20)	Q....20	50.03.0520	BU 522	see note 6	Mot
(20)	R....1	57.11.4273	27 kOhm	5%	
(20)	R....2	57.11.4392	3.9 kOhm	5%	
(20)	R....3	57.11.4102	1 kOhm	5%	
(20)	R....4	57.11.4102	1.0 kOhm	5%	
(20)	R....5	57.11.4562	5.6 kOhm	5%	
(20)	R....6	57.11.4562	5.6 kOhm	5%	

IND.	POS.NO.	PART NO.	VALUE	SPECIFICATIONS / EQUIVALENT	MANUF.
(20)	R....7	57.11.4182	1.8 kOhm	5%	
(20)	R....8	57.11.4120	12 Ohm	5%	
(20)	R....9	57.11.4120	12 Ohm	5%	
(20)	R....10	57.11.4479	4.7 Ohm	5%	
(20)	R....11	57.11.4479	4.7 Ohm	5%	
(20)	R....12	57.11.4120	12 Ohm	5%	
(20)	R....13	57.11.4120	12 Ohm	5%	
(20)	R....14	57.11.4152	1.5 kOhm	5%	
(20)	R....15	57.92.1681	1.6 Ohm	PTC, see Note 4	
(20)	R....16	57.11.4222	2.2 kOhm	5%	
(20)	R....17	57.11.4272	2.7 kOhm	5%	
(20)	R....18	57.11.4332	3.3 kOhm	5%	
(20)	R....19	57.11.4331	330 Ohm	5%	
(20)	R....20	57.11.4392	3.9 kOhm	5%	
(20)	R....21	57.11.4102	1 kOhm	5%	
(20)	R....22	57.11.4222	2.2 kOhm	5%	
(20)	R....23	57.11.4272	2.7 kOhm	5%	
(20)	R....24	57.11.4332	3.3 kOhm	5%	
(20)	R....25	57.11.4331	330 Ohm	5%	
(20)	R....26	57.11.4392	3.9 kOhm	5%	
(20)	R....27	57.11.4102	1 kOhm	5%	
(20)	R....28	57.11.4222	2.2 kOhm	5%	
(20)	R....29	57.11.4272	2.7 kOhm	5%	
(20)	R....30	57.11.4332	3.3 kOhm	5%	
(20)	R....31	57.11.4331	330 Ohm	5%	
(20)	R....32	57.11.4392	3.9 kOhm	5%	
(20)	R....33	57.11.4102	1 kOhm	5%	
(20)	R....34	57.11.4102	1 kOhm	5%	
(20)	R....35	57.11.4152	1.5 kOhm	5%	
(20)	R....36	not used			
(20)	R....38	57.11.4123	12 kOhm	5%	
(20)	R....39	57.11.4105	1 MOhm	5%	
(20)	R....40	57.11.4222	2.2 kOhm	5%	
(20)	R....41	57.11.4272	2.7 kOhm	5%	
(20)	R....42	not used			
(20)	R....43	57.11.4223	22 kOhm	5%	
(20)	R....44	57.11.4332	3.3 kOhm	5%	

IND.	POS.NO.	PART NO.	VALUE	SPECIFICATIONS / EQUIVALENT	MANUF.
(20)	R....45	57.11.4103	10 kOhm	5%	
(20)	R....46	57.11.4103	10 kOhm	5%	
(20)	R....47	57.11.4222	2.2 kOhm	5%	
(20)	R....48	not used			
(20)	R....49	57.11.4822	8.2 kOhm	5%	
(20)	R....50	57.11.4822	8.2 kOhm	5%	
(20)	R....51	57.11.4822	8.2 kOhm	5%	
(20)	R....52	57.11.4100	10 Ohm	5%	
(20)	R....53	57.11.4222	2.2 kOhm	5%	
(20)	R....54	57.11.4223	22 kOhm	5%	
(20)	R....55	not used			
(20)	R....56	57.56.5108	0.1 Ohm	10%	
(20)	R....57	57.56.5108	0.1 Ohm	10%	
(20)	R....58	57.11.4472	4.7 kOhm	5%	
(20)	R....59	57.11.5225	2.2 MOhm	5%	
(20)	R....60	57.11.4272	2.7 kOhm	5%	
(20)	R....61	57.11.4562	5.6 kOhm	5%	
(20)	R....62	57.11.4103	10 kOhm	5%	
(20)	R....63	57.11.4562	5.6 kOhm	5%	
(20)	R....64	57.11.4332	3.3 kOhm	5%	
(20)	R....65	57.11.4103	10 kOhm	5%	
(20)	R....66	57.11.4223	22 kOhm	5%	
(20)	R....67	57.11.4103	10 kOhm	5%	
(20)	R....68	57.11.4821	820 Ohm	5%	
(20)	R....69	57.11.4822	8.2 kOhm	5%	
(20)	R....70	not used		(High voltage protection)	
(20)	RZ....1	57.88.4103		see note 5	
(20)	TP....1	29.21.6002		Test Point	
(20)	TP....2	29.21.6002		Test Point	
(20)	TP....3	29.21.6002		Test Point	
(20)	TP....4	29.21.6002		Test Point	
(20)	TP....5	29.21.6002		Test Point	
(20)	TP....6	29.21.6002		Test Point	
(20)	TP....7	29.21.6002		Test Point	
(20)	TP....8	29.21.6002		Test Point	

(21) 85.11.20 Improved clock synchronization performance.
(22) 86.02.06 Clock level modification for new device IC 4.

Note 1 - Connector,
Case: Studer Nr. 54.02.0408
Molex Nr. 03.06.2121
Contact pin: Studer Nr. 54.02.0406
Molex Nr. 02.06.8103

Note 2 - Connector,
Case: Studer Nr. 54.02.0418
Molex Nr. 03.06.2061
Contact pin: Studer Nr. 54.02.0406
Molex Nr. 02.06.8103

Note 3 - Connector: Yamaichi Nr. FAP.16.08.4055
Burndy Nr. BPH 9 B 16 800 GS

Note 4 - PTC Resistor 1.6 Ohm, Philips Nr. 2322 664 16881
may be replaced by two PTC Resistors 2.3 Ohm, Studer Nr. 57.99.0210
(Positions R 15 and R 55).

Note 5 - Resistor network, 5%, 8 * 10 kOhm
Bourns Nr. 4609 X - 101 - 103
Beckmann Nr. L - 09 - 1 - 8 10 k
Sprague Nr. 256 CJ 103 X2 PD
Matsushita Nr. F 9 E 10 K 5%
Tama Nr. MBC L 09 X 10 k J

Note 6 - For excellent wow and flutter values at 3.75 ips the NPN - respective the PNP - Transistors should be from the same manufacturer.

Ce=Ceramic, El=Electrolytic, PETP=Polyester Film, PP=Polypropylen

MANUFACTURER: Ex=Exar, Fc=Fairchild, GI=General Instruments,
ITT=Intermetall, IPS=Integrated Power Semiconductors Ltd.,
MM=Monolitic Memoris Inc., Mot=Motorola,
NS=National Semiconductors, Ph=Philips, Ra=Raytheon,
RCA=RCA Corporation of America, Sie=Siemens, Sig=Signetics,
Ses=Sescosem, SG=Silicon General, SGS=SGS-Ates, St=Studer,
Tf=Telefunken, TI=Texas Instruments, To=Toshiba.

ORIG 84/12/04 (20) 84/12/04 (21) 85/11/20 (22) 86/02/06

THREE PHASE TRISTATE DRIVE AMPLIFIER 1.820.774.25

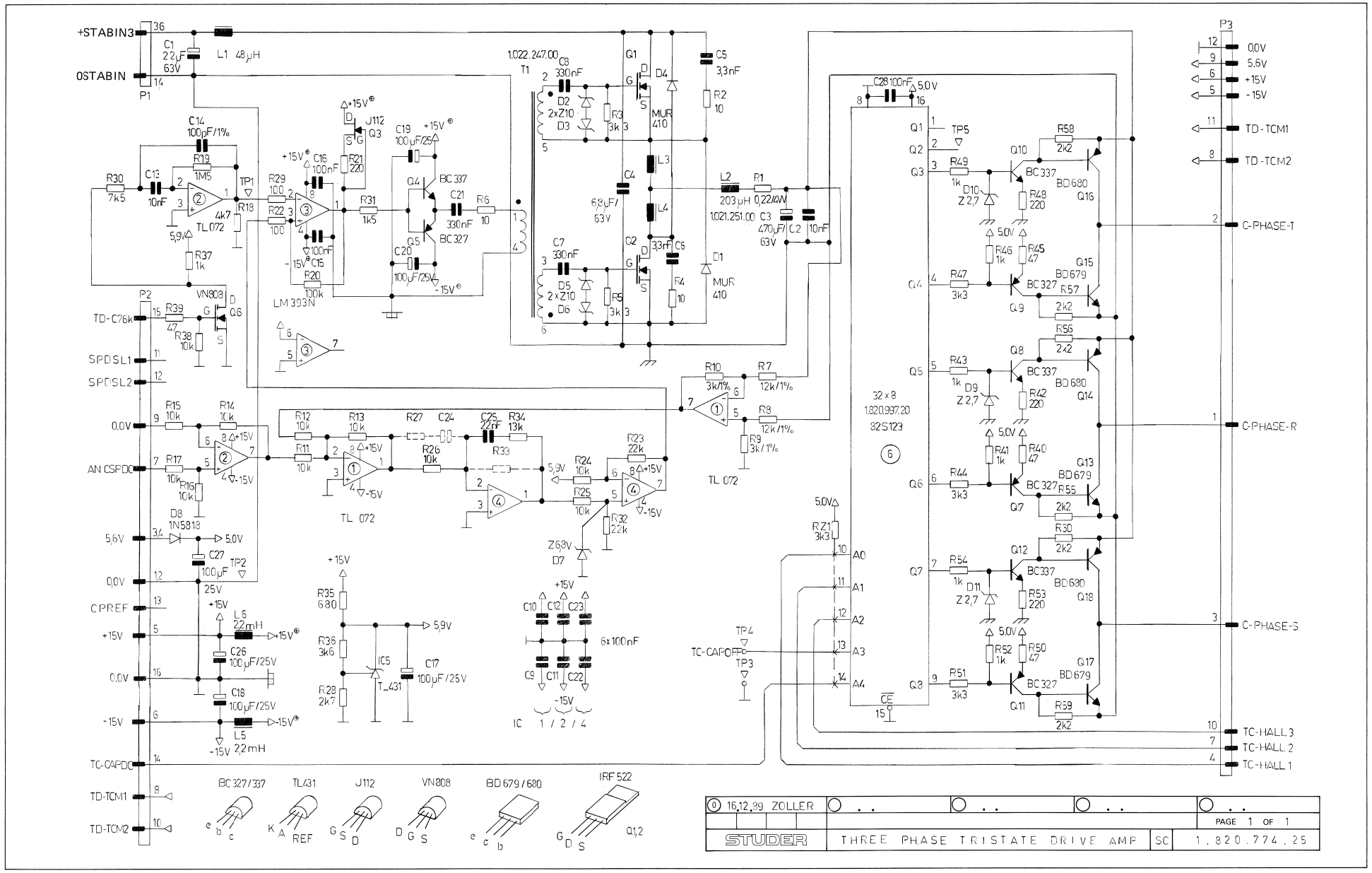

THREE PHASE TRISTATE DRIVE AMPLIFIER 1.820.774.25

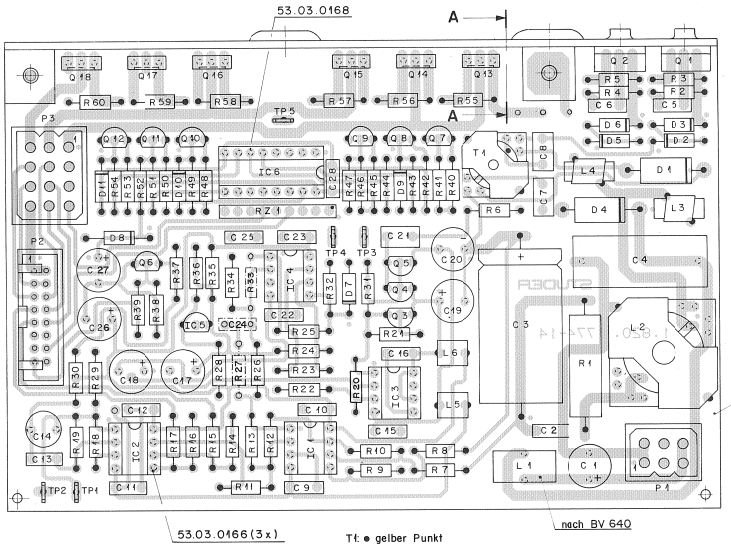

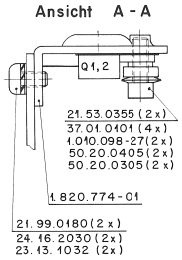

IND.	POS.NO.	PART NO.	VALUE	SPECIFICATIONS / EQUIVALENT	MANUF.
	C....1	59.22.8220	22 uF	-20%. 63V, EL	
	C....2	59.06.0103	10 nF	10%. 63V, PETP	
	C....3	59.25.6471	470 uF	-20%. 63V, EL	
	C....4	59.02.0685	6.8 uF	5%. 63V, MPC	
	C....5	59.06.0332	3.3 nF	10%. 63V, PETP	
	C....6	59.06.0332	3.3 nF	10%. 63V, PETP	
	C....7	59.06.0334	330 nF	10%. 63V, PETP	
	C....8	59.06.0334	330 nF	10%. 63V, PETP	
	C....9	59.06.0104	100 nF	10%. 63V, PETP	
	C....10	59.06.0104	100 nF	10%. 63V, PETP	
	C....11	59.06.0104	100 nF	10%. 63V, PETP	
	C....12	59.06.0104	100 nF	10%. 63V, PETP	
	C....13	59.06.0103	10 nF	10%. 63V, PETP	
	C....14	59.05.1101	100 pF	1%. 63V, PP	
	C....15	59.06.0104	100 nF	10%. 63V, PETP	
	C....16	59.06.0104	100 nF	10%. 63V, PETP	
	C....17	59.22.5101	100 uF	-20%. 25V, EL	
	C....18	59.22.5101	100 uF	-20%. 25V, EL	
	C....19	59.22.5101	100 uF	-20%. 25V, EL	
	C....20	59.22.5101	100 uF	-20%. 25V, EL	
	C....21	59.06.0394	330 nF	10%. 63V, PETP	
	C....22	59.06.0124	100 nF	10%. 63V, PETP	
	C....23	59.06.0124	100 nF	10%. 63V, PETP	
	C....24		not used		
	C....25	59.06.0223	22 nF	10%. 63V, PETP	
	C....26	59.22.5131	100 uF	-20%. 25V, EL	
	C....27	59.22.5131	100 uF	-20%. 25V, EL	
	C....28	59.06.0124	100 nF	10%. 63V, PETP	
	D....1	50.04.0521	MUR 410		Mot,Gi
	D....2	50.04.1216	Z 10 V	5%. 1.3W	ITT,Mot,Ph,Tf,SGS
	D....3	50.04.1216	Z 10 V	5%. 1.3W	ITT,Mot,Ph,Tf,SGS
	D....4	50.04.0521	MUR 410		Mot,Gi
	D....5	50.04.1216	Z 10 V	5%. 1.3W	ITT,Mot,Ph,Tf,SGS
	D....6	50.04.1216	Z 10 V	5%. 1.3W	ITT,Mot,Ph,Tf,SGS
	D....7	50.04.1122	Z 6.8 V	5%. .40W	ITT,Mot,Ph,Tf,SGS
	D....8	50.04.0512	1N 5819		Mot

IND.	POS.NO.	PART NO.	VALUE	SPECIFICATIONS / EQUIVALENT	MANUF.
	R....34	57.11.3133	13 kOhm	1%	
	R....35	57.11.3681	680 Ohm	10%	
	R....36	57.11.3362	3.6 kOhm	1%	
	R....37	57.11.3102	1 kOhm	10%	
	R....38	57.11.3103	10 kOhm	10%	
	R....39	57.11.3470	47 Ohm	10%	
	R....40	57.11.3470	47 Ohm	10%	
	R....41	57.11.3102	1 kOhm	10%	
	R....42	57.11.3221	220 Ohm	10%	
	R....43	57.11.3102	1 kOhm	10%	
	R....44	57.11.3332	3.3 kOhm	10%	
	R....45	57.11.3470	47 Ohm	10%	
	R....46	57.11.3102	1 kOhm	10%	
	R....47	57.11.3332	3.3 kOhm	10%	
	R....48	57.11.3221	220 Ohm	10%	
	R....49	57.11.3102	1 kOhm	10%	
	R....50	57.11.3470	47 Ohm	10%	
	R....51	57.11.3332	3.3 kOhm	10%	
	R....52	57.11.3102	1 kOhm	10%	
	R....53	57.11.3221	220 Ohm	10%	
	R....54	57.11.3102	1 kOhm	10%	
	R....55	57.11.3222	2.2 kOhm	10%	
	R....56	57.11.3222	2.2 kOhm	10%	
	R....57	57.11.3222	2.2 kOhm	10%	
	R....58	57.11.3222	2.2 kOhm	10%	
	R....59	57.11.3222	2.2 kOhm	10%	
	R....60	57.11.3222	2.2 kOhm	10%	
	RZ....1	57.88.4332	Network,	8 x 3.3 KOhm, 2%, SIP 9	
	T.....1	1.022.247.00		Drive Transformer	St
	TP....1	54.02.0320	Connector	1 contact , 2.8x0.8, flat	
	TP....2	54.02.0320	Connector	1 contact , 2.8x0.8, flat	
	TP....3	54.02.0320	Connector	1 contact , 2.8x0.8, flat	
	TP....4	54.02.0320	Connector	1 contact , 2.8x0.8, flat	
	TP....5	54.02.0320	Connector	1 contact , 2.8x0.8, flat	

IND.	POS.NO.	PART NO.	VALUE	SPECIFICATIONS / EQUIVALENT	MANUF.
	B....9	50.04.1106	Z 2.7 V	5%. .40W	ITT,Mot,Ph,Tf,SGS
	B....10	50.04.1106	Z 2.7 V	5%. .40W	ITT,Mot,Ph,Tf,SGS
	B....11	50.04.1106	Z 2.7 V	5%. .40W	ITT,Mot,Ph,Tf,SGS
	IC....1	50.09.0101	TL 072 CP		Mot,Ti,NS
	IC....2	50.09.0101	TL 072 CP		Mot,Ti,NS
	IC....3	50.05.0203	LM 393 ..	TDB 0193 DP	NS,Sig,Ti,Tho
	IC....4	50.09.0101	TL 072 CP		Mot,Ti,NS
	IC....5	50.10.0106	TL 431CLP		Mot,Ti
	IC....6	1.820.997.20		Commutation logic device	St
	L.....1	62.03.0010	48 uH	2 A, filter	
	L.....2	1.022.251.00	203 uH	Filtercoil	St
	L.....3	62.99.0113	1.0 uH		
	L.....4	62.99.0113	1.0 uH		
	L.....5	62.02.3222	2.2 mH	10%, Rad, RM 5	
	L.....6	62.02.3222	2.2 mH	10%, Rad, RM 5	
	P.....1	54.02.0418	Connector	6 contacts, MOLEX, see note 2	
	P.....2	54.14.2102	Connector	16 contacts, latch, flat cable	
	P.....3	54.02.0408	Connector	12 contacts, MOLEX, see note 1	
	Q.....1	50.03.1102	IRF 522	MTI BR10	IR,Mot
	Q.....2	50.03.1102	IRF 522	MTI BR10	IR,Mot
	Q.....3	50.03.0250	J-112		Mot
	Q.....4	50.03.0040	BC 337-25		ITT,Ph,Sie
	Q.....5	50.03.0251	BC 327-25		ITT,Ph,Sie
	Q.....6	50.03.1505	VN 0808 M	ZVN 0108 A	Fa,Sie
	Q.....7	50.03.0251	BC 327-25		ITT,Ph,Sie
	Q.....8	50.03.0040	BC 337-25		ITT,Ph,Sie
	Q.....9	50.03.0251	BC 327-25		ITT,Ph,Sie
	Q....10	50.03.0040	BC 337-25		ITT,Ph,Sie
	Q....11	50.03.0251	BC 327-25		ITT,Ph,Sie
	Q....12	50.03.0040	BC 337-25		ITT,Ph,Sie
	Q....13	50.03.0749	BD 679	see note 3	Ph
	Q....14	50.03.0799	BD 680	see note 3	Ph
	Q....15	50.03.0749	BD 679	see note 3	Ph

IND.	POS.NO.	PART NO.	VALUE	SPECIFICATIONS / EQUIVALENT	MANUF.
	Q....16	50.03.0799	BD 680	see note 3	Ph
	Q....17	50.03.0749	BD 679	see note 3	Ph
	Q....18	50.03.0799	BD 680	see note 3	Ph
	R.....1	57.56.5228	0.22 Ohm	1%, 4 W, WW	
	R.....2	57.11.3100	10 Ohm	1%	
	R.....3	57.11.3332	3.3 kOhm	1%	
	R.....4	57.11.3100	10 Ohm	1%	
	R.....5	57.11.3332	3.3 kOhm	1%	
	R.....6	57.11.3100	10 Ohm	1%	
	R.....7	57.11.3123	12 kOhm	1%	
	R.....8	57.11.3123	12 kOhm	1%	
	R.....9	57.11.3302	3 kOhm	1%	
	R....10	57.11.3302	3 kOhm	1%	
	R....11	57.11.3103	10 kOhm	10%	
	R....12	57.11.3103	10 kOhm	10%	
	R....13	57.11.3103	10 kOhm	10%	
	R....14	57.11.3103	10 kOhm	10%	
	R....15	57.11.3103	10 kOhm	10%	
	R....16	57.11.3103	10 kOhm	10%	
	R....17	57.11.3103	10 kOhm	10%	
	R....18	57.11.3472	4.7 kOhm	10%	
	R....19	57.11.5155	1.5 MOhm	10%	
	R....20	57.11.3104	100 kOhm	10%	
	R....21	57.11.3221	220 Ohm	10%	
	R....22	57.11.3101	100 Ohm	10%	
	R....23	57.11.3223	22 kOhm	10%	
	R....24	57.11.3103	10 kOhm	10%	
	R....25	57.11.3103	10 kOhm	10%	
	R....26	57.11.3103	10 kOhm	10%	
	R....27		not used		
	R....28	57.11.3272	2.7 kOhm	1%	
	R....29	57.11.3101	100 Ohm	10%	
	R....30	57.11.3752	7.5 kOhm	1%	
	R....31	57.11.3152	1.5 kOhm	10%	
	R....32	57.11.3223	22 kOhm	10%	
	R....33		not used		

IND.	POS.NO.	PART NO.	VALUE	SPECIFICATIONS / EQUIVALENT	MANUF.

Note 1 - Connector:

Case:	Studer Nr.	54.02.0408	
	Molex Nr.	03-06-2121	
Contact pin:	Studer Nr.	54.02.0406	
	Molex Nr.	02-06-8103	

Note 2 - Connector:

Case:	Studer Nr.	54.02.0418	
	Molex Nr.	03-06-2061	
Contact pin:	Studer Nr.	54.02.0406	
	Molex Nr.	02-06-8103	

Note 3 - For excellent wow and flutter values at 3.75 ips the NPN - respective the PNP - Transistors should be from the same type and manufacturer.

Ce=Ceramic, El=Electrolytic, PETP=Polyester Film, PP=Polypropylen

MANUFACTURER: Ex=Exar, Fa=Ferranti, GI=General Instruments, ITT=Internetall, IPS=Integrated Power Semiconductors Ltd., MMI=Monolitic Memorie Inc., Mot=Motorola, NS=National Semiconductors, Ph=Philips, Ra=Raytheon, RCA=Radio Corporation of America, Sie=Siemens, Sig=Signetics, Sa=Sanyo, Sie=Siliconix, SGS=SGS-Ates, St=Studer, Te=Telefunken, TI=Texas Instruments, To=Toshiba.

ORIG 89/12/16

BLOCK DIAGRAM
TACHO SENSOR ELECTRONICS PCB 1.820.695

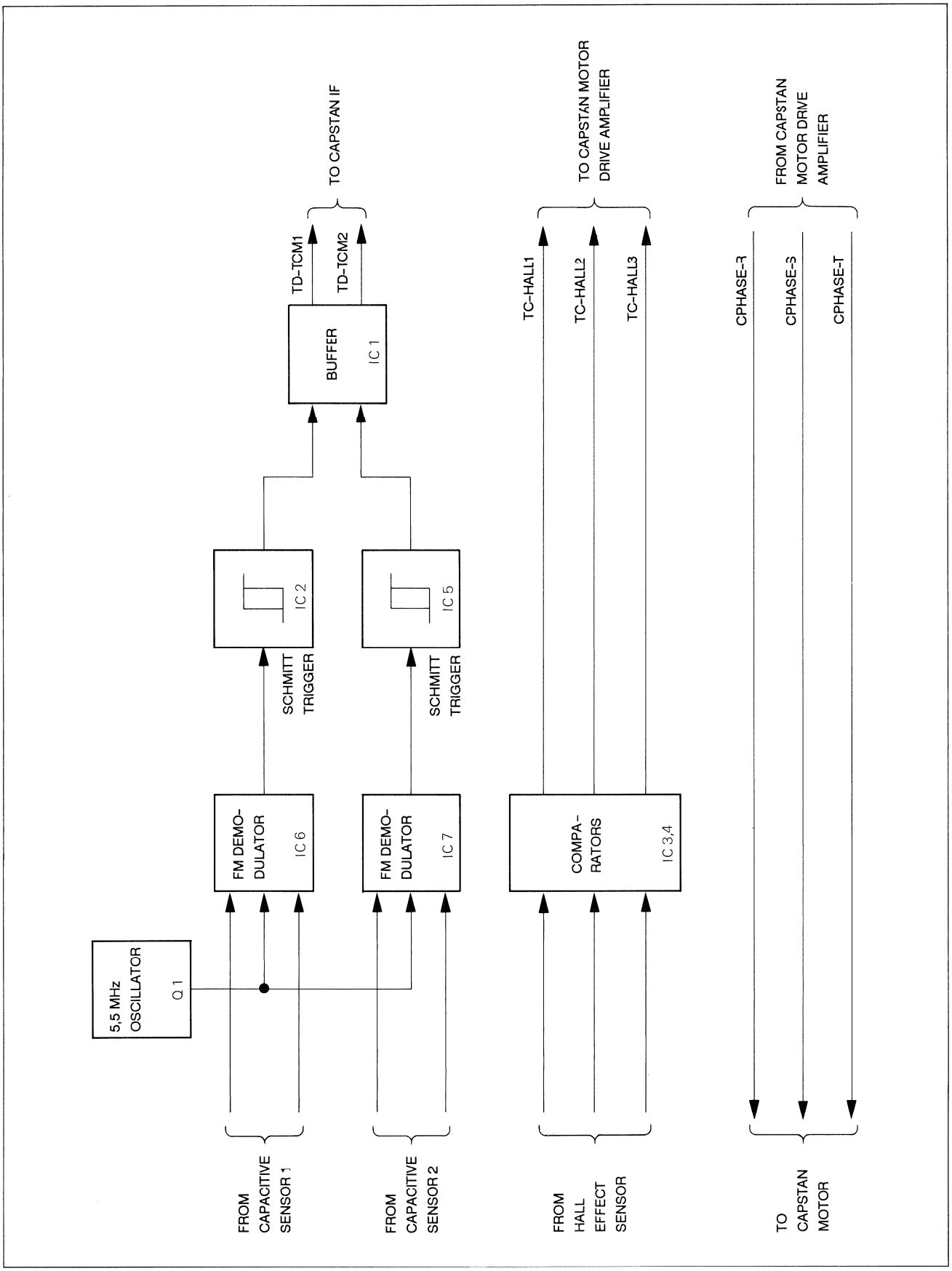

TACHO SENSOR ELECTRONICS PCB 1.021.695.81

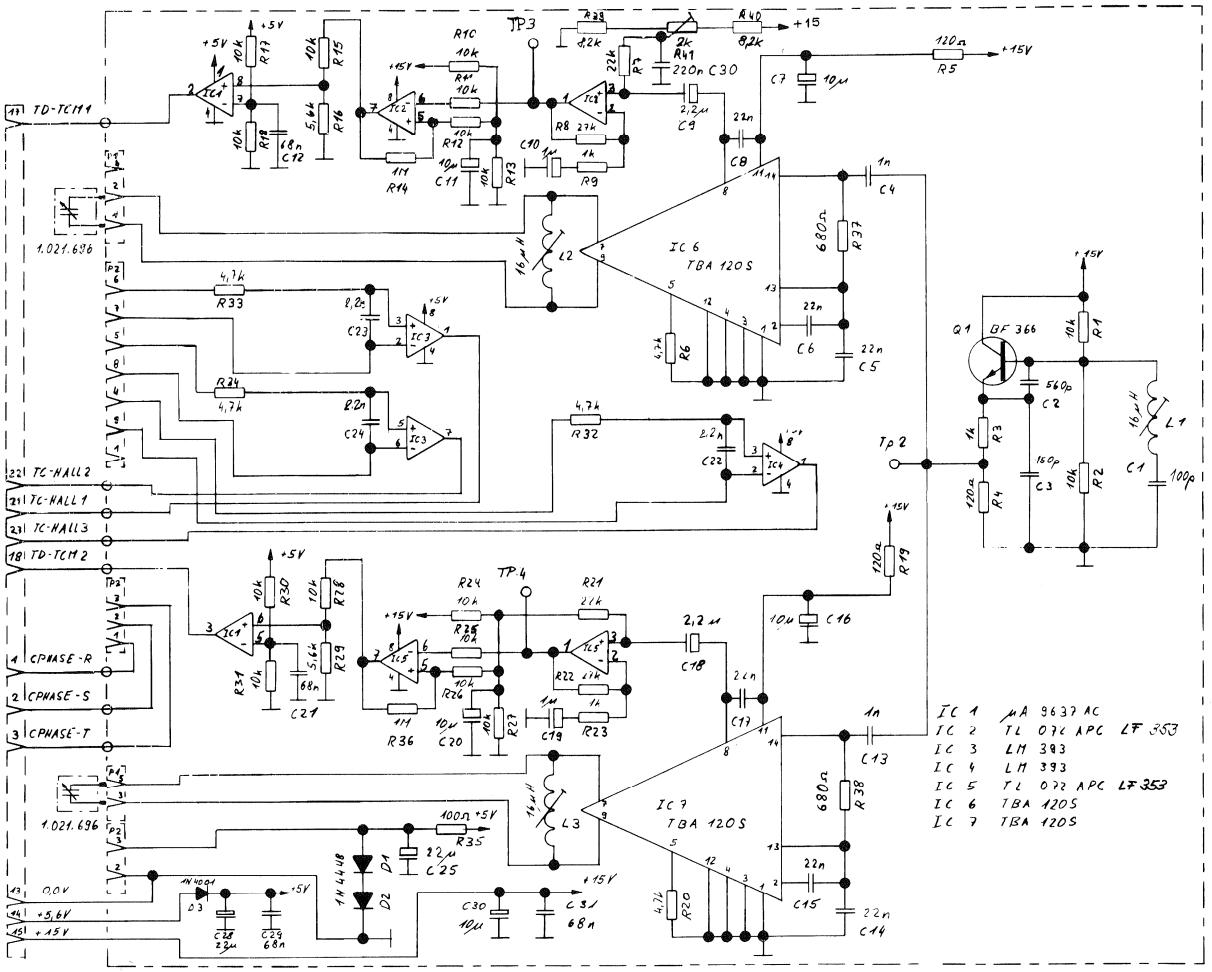

0 4.12.84 Buk				
	A 820 Tape Transport Section			PAGE 1 OF 1
STUDER	Tacho Sensor Electronics PCB		SC	1.021.695.81

TACHO SENSOR ELECTRONICS PCB 1.021.695.81

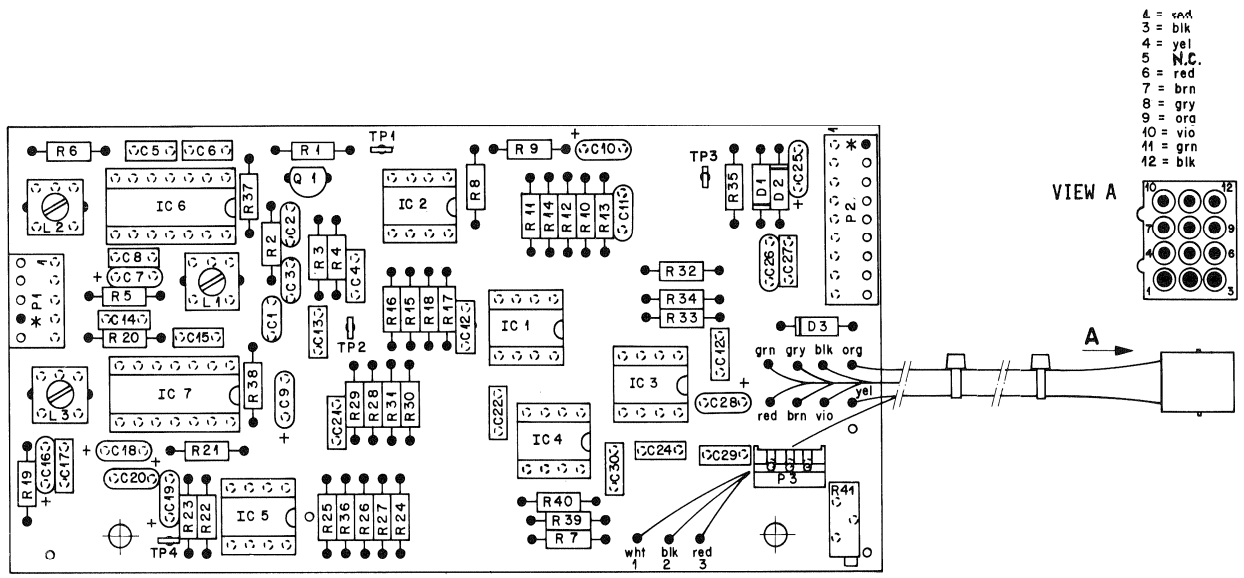

IND.	POS.NO.	PART NO.	VALUE	SPECIFICATIONS / EQUIVALENT	MANUF.
	C.....1	59.34.4101	100 pF	5%, N750, CI	
	C.....2	59.34.5561	560 pF	5%, 63V, CI	
	C.....3	59.34.4151	150 pF	5%, N750, CI	
	C.....4	59.06.0102	1 nF	10%, 63V, PETP	
	C.....5	59.06.0223	22 nF	10%, 63V, PETP	
	C.....6	59.06.0223	22 nF	10%, 63V, PETP	
	C.....7	59.26.2100	10 uF	20%, 16V, EL	
	C.....8	59.06.0223	22 nF	10%, 63V, PETP	
	C.....9	59.26.5229	2.2 uF	20%, 25V, EL	
	C.....10	59.26.9109	1 uF	20%, 40V, EL	
	C.....11	59.26.2100	10 uF	20%, 16V, EL	
	C.....12	59.06.0683	68 nF	10%, 63V, PETP	
	C.....13	59.06.0102	1 nF	10%, 63V, PETP	
	C.....14	59.06.0223	22 nF	10%, 63V, PETP	
	C.....15	59.06.0223	22 nF	10%, 63V, PETP	
	C.....16	59.26.2100	10 uF	20%, 16V, EL	
	C.....17	59.06.0223	22 nF	10%, 63V, PETP	
	C.....18	59.26.5229	2.2 uF	20%, 25V, EL	
	C.....19	59.26.9109	1 uF	20%, 40V, EL	
	C.....20	59.26.2100	10 uF	20%, 16V, EL	
	C.....21	59.06.0683	68 nF	10%, 63V, PETP	
	C.....22	59.06.0222	2.2 nF	10%, 63V, PETP	
	C.....23	59.06.0222	2.2 nF	10%, 63V, PETP	
	C.....24	59.06.0222	2.2 nF	10%, 63V, PETP	
	C.....25	59.26.1220	22 uF	20%, 10V, EL	
	C.....26	59.26.1220	22 uF	20%, 10V, EL	
	C.....27	59.06.0683	68 nF	10%, 63V, PETP	
	C.....28	59.26.2100	10 uF	20%, 16V, EL	
	C.....29	59.06.0683	68 nF	10%, 63V, PETP	
	C.....30	59.06.0224	220 nF	10%, 63V, PETP	
	D.....1	50.04.0125	1N 4448		Fc,ITT,Ph,Ses,Tf
	D.....2	50.04.0125	1N 4448		Fc,ITT,Ph,Ses,Tf
	D.....3	50.04.0122	1N 4001	(to 4004)	Mot
	IC....1	50.15.0114	UA9637ACP	9637 ATC	Fc,TI
	IC....2	50.09.0101	LF 353 N	TL 072 CP	NS,TI

IND.	POS.NO.	PART NO.	VALUE	SPECIFICATIONS / EQUIVALENT	MANUF.
	IC....3	50.05.0283	LM 393 N	LM 393 P	NS,TI
	IC....4	50.05.0283	LM 393 N	LM 393 P	NS,TI
	IC....5	50.09.0101	LF 353 N	TL 072 CP	NS,TI
	IC....6	50.11.0107	TBA 120S		Sie
	IC....7	50.11.0107	TBA 120S		Sie
	L.....1	1.022.222.00	16 mH	HF-COIL	St
	L.....2	1.022.222.00	16 mH	HF-COIL	St
	L.....3	1.022.222.00	16 mH	HF-COIL	St
	P.....1	54.01.0288		see Note 2	
	P.....2	54.01.0217		see Note 3	
	P.....3	54.14.5005		see Note 4	
	Q.....1	50.03.0514	BF 366		Mot
	R.....1	57.11.4103	10 kOhm	5%	
	R.....2	57.11.4103	10 kOhm	5%	
	R.....3	57.11.4102	1 kOhm	5%	
	R.....4	57.11.4121	120 Ohm	5%	
	R.....5	57.11.4121	120 Ohm	5%	
	R.....6	57.11.4472	4.7 kOhm	5%	
	R.....7	57.11.4223	22 kOhm	5%	
	R.....8	57.11.4273	27 kOhm	5%	
	R.....9	57.11.4102	1 kOhm	5%	
	R....10	57.11.4103	10 kOhm	5%	
	R....11	57.11.4103	10 kOhm	5%	
	R....12	57.11.4103	10 kOhm	5%	
	R....13	57.11.4103	10 kOhm	5%	
	R....14	57.11.4105	1 MOhm	5%	
	R....15	57.11.4103	10 kOhm	5%	
	R....16	57.11.4562	5.6 kOhm	5%	
	R....17	57.11.4103	10 kOhm	5%	
	R....18	57.11.4103	10 kOhm	5%	
	R....19	57.11.4121	120 Ohm	5%	
	R....20	57.11.4472	4.7 kOhm	5%	
	R....21	57.11.4223	22 kOhm	5%	

IND.	POS.NO.	PART NO.	VALUE	SPECIFICATIONS / EQUIVALENT	MANUF.
	R....22	57.11.4273	27 kOhm	5%	
	R....23	57.11.4102	1 kOhm	5%	
	R....24	57.11.4103	10 kOhm	5%	
	R....25	57.11.4103	10 kOhm	5%	
	R....26	57.11.4103	10 kOhm	5%	
	R....27	57.11.4103	10 kOhm	5%	
	R....28	57.11.4103	10 kOhm	5%	
	R....29	57.11.4562	5.6 kOhm	5%	
	R....30	57.11.4103	10 kOhm	5%	
	R....31	57.11.4103	10 kOhm	5%	
	R....32	57.11.4472	4.7 kOhm	5%	
	R....33	57.11.4472	4.7 kOhm	5%	
	R....34	57.11.4472	4.7 kOhm	5%	
	R....35	57.11.4101	100 Ohm	5%	
	R....36	57.11.4105	1 MOhm	5%	
	R....37	57.11.4681	680 Ohm	5%	
	R....38	57.11.4681	680 Ohm	5%	
	R....39	57.11.4822	8.2 kOhm	5%	
	R....40	57.11.4822	8.2 kOhm	5%	
	R....41	58.05.0202	2 kOhm	10%	see Note 1
	TP....1	29.21.6002			Testpoint
	TP....2	29.21.6002			Testpoint
	TP....3	29.21.6002			Testpoint
	TP....4	29.21.6002			Testpoint

Note 1: Pot: Bourns, Nr.: 3296 Z-1-202
Spectrol, Nr.: 64 Z 202 T 000
Murata, Nr.: Pot 3105 Z-1-202

Note 2: Plug: 5-Pin AMP, NR.: --163.680-3

Note 3: Plug: 9-Pin AMP, Nr.: --163.680-7

Note 4: Plug: 3-Pin Burndy, Nr.: MWP 3P-1B

CE=Ceramic, EL=Electrolytic, PETP=Polyester Film

MANUFACTURER: Fc=Fairchild, GI=General Instruments, ITT=Intermetall,
Mot=Motorola, NS=National Semiconductors, Ph=Philips,
Sie=Siemens, St=Studer, TI=Texas Instruments

ORIG 84/12/04

TACHO SENSOR ELECTRONICS PCB 1.021.695.83

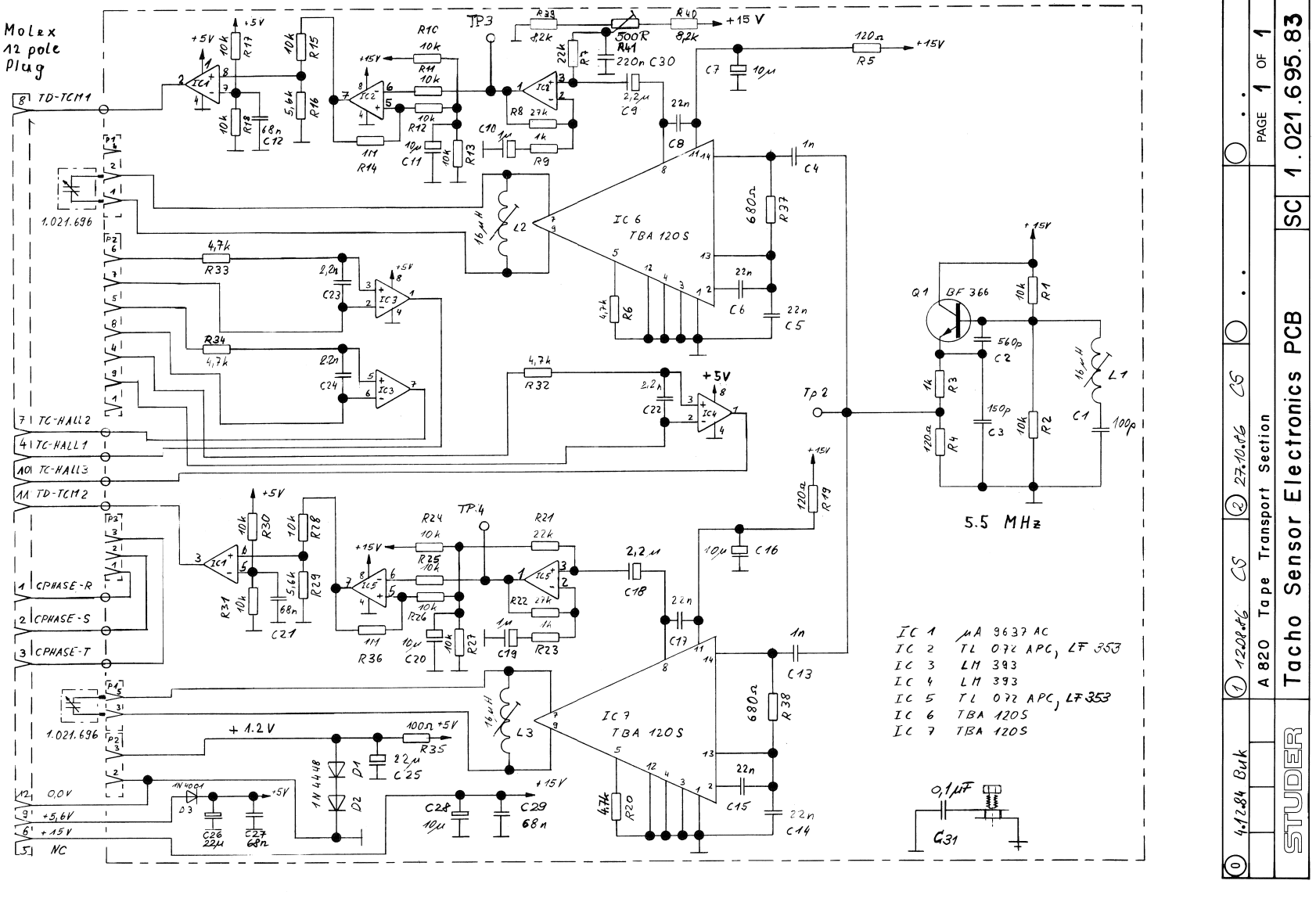

0	4.12.84 Buk	1	12.08.86 CS	2	27.10.86 CS	. . . . .
STUDER	A 820 Tape Transport Section					PAGE 1 OF 1
STUDER	Tacho Sensor Electronics PCB					SC 1.021.695.83

TACHO SENSOR ELECTRONICS PCB 1.021.695.83

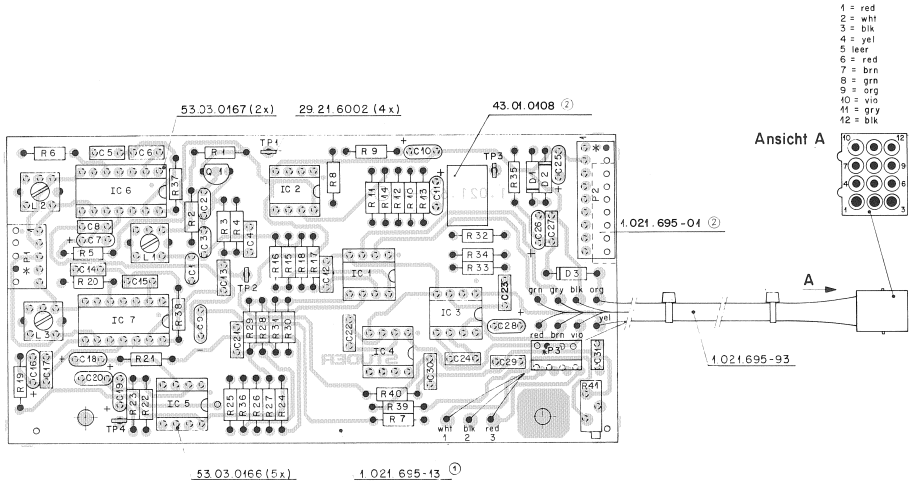

* Codierung: Schaltdraht 64.01.0108 ø0,8x8mm
(muss 1mm vorstehen)

① Mit der Einführung der Printplatte -13 entfallen:
- Leiterbahnaufteilung
- Isolierschlauch
- 1.022.400-03

IND.	POS.NO.	PART NO.	VALUE	SPECIFICATIONS / EQUIVALENT	MANUF.
	C.....1	59.14.4101	100 pF	5%, N750, CE	
	C.....2	59.14.5561	560 pF	5%, 63V, CE	
	C.....3	59.14.4151	150 pF	5%, N750, CE	
	C.....4	59.76.0102	1 nF	10%, 63V, PETP	
	C.....5	59.76.0223	22 nF	10%, 63V, PETP	
	C.....6	59.76.0223	22 nF	10%, 63V, PETP	
	C.....7	59.76.2100	10 uF	20%, 16V, EL	
	C.....8	59.76.0223	22 nF	10%, 63V, PETP	
	C.....9	59.76.3229	2.2 uF	20%, 25V, EL	
	C.....10	59.76.4109	1 uF	20%, 40V, EL	
	C.....11	59.76.2100	10 uF	20%, 16V, EL	
	C.....12	59.76.0563	68 nF	10%, 63V, PETP	
	C.....13	59.76.0102	1 nF	10%, 63V, PETP	
	C.....14	59.76.0223	22 nF	10%, 63V, PETP	
	C.....15	59.76.0223	22 nF	10%, 63V, PETP	
	C.....16	59.76.2100	10 uF	20%, 16V, EL	
	C.....17	59.76.0223	22 nF	10%, 63V, PETP	
	C.....18	59.76.3229	2.2 uF	20%, 25V, EL	
	C.....19	59.76.4109	1 uF	20%, 40V, EL	
	C.....20	59.76.2100	10 uF	20%, 16V, EL	
	C.....21	59.76.0563	68 nF	10%, 63V, PETP	
	C.....22	59.76.0222	2.2 nF	10%, 63V, PETP	
	C.....23	59.76.0222	2.2 nF	10%, 63V, PETP	
	C.....24	59.76.0222	2.2 nF	10%, 63V, PETP	
	C.....25	59.76.1220	22 uF	20%, 10V, EL	
	C.....26	59.76.1220	22 uF	20%, 10V, EL	
	C.....27	59.76.0563	68 nF	10%, 63V, PETP	
	C.....28	59.76.2100	10 uF	20%, 16V, EL	
	C.....29	59.76.0563	68 nF	10%, 63V, PETP	
	C.....30	59.76.0224	220 nF	10%, 63V, PETP	
	C.....31	59.76.0104	100 nF	10%, 63V, PETP	
	D.....1	50.04.0125	1N 4448		Fc+ITT+Phs+Ses+If
	D.....2	50.04.0125	1N 4448		Fc+ITT+Phs+Ses+If
	D.....3	50.04.0122	1N 4001	(to 4004)	Mot
	IC.....1	50.15.0114	UA9637ACP	9637 ATC	Fc+TI

IND.	POS.NO.	PART NO.	VALUE	SPECIFICATIONS / EQUIVALENT	MANUF.
	IC.....2	50.39.0101	LF 353 N	TL 072 CP	NS+TI
	IC.....3	50.35.0283	LM 393 N	LM 393 P	NS+TI
	IC.....4	50.35.0283	LM 393 N	LM 393 P	NS+TI
	IC.....5	50.09.0101	LF 353 N	TL 072 CP	NS+TI
	IC.....6	50.11.0107	TBA 120S		Sie
	IC.....7	50.11.0107	TBA 120S		Sie
	L.....1	1.028.222.00	16 mH	HF-COIL	St
	L.....2	1.028.222.00	16 mH	HF-COIL	St
	L.....3	1.028.222.00	16 mH	HF-COIL	St
	P.....1	54.31.0288		see Note 2	
	P.....2	54.31.0217		see Note 3	
(CS)	P.....3	54.31.0287		see Note 4	
(CL)	P.....3	54.31.0241		see Note 4	
	Q.....1	50.03.0514	BF 366		Mot
	R.....1	57.11.4103	10 kOhm	5%	
	R.....2	57.11.4103	10 kOhm	5%	
	R.....3	57.11.4102	1 kOhm	5%	
	R.....4	57.11.4121	120 Ohm	5%	
	R.....5	57.11.4121	120 Ohm	5%	
	R.....6	57.11.4472	4.7 kOhm	5%	
	R.....7	57.11.4223	22 kOhm	5%	
	R.....8	57.11.4273	27 kOhm	5%	
	R.....9	57.11.4102	1 kOhm	5%	
	R.....10	57.11.4103	10 kOhm	5%	
	R.....11	57.11.4103	10 kOhm	5%	
	R.....12	57.11.4103	10 kOhm	5%	
	R.....13	57.11.4103	10 kOhm	5%	
	R.....14	57.11.4125	1 MOhm	5%	
	R.....15	57.11.4103	10 kOhm	5%	
	R.....16	57.11.4562	5.6 kOhm	5%	
	R.....17	57.11.4103	10 kOhm	5%	
	R.....18	57.11.4103	10 kOhm	5%	
	R.....19	57.11.4121	120 Ohm	5%	

IND.	POS.NO.	PART NO.	VALUE	SPECIFICATIONS / EQUIVALENT	MANUF.
	R.....20	57.11.4472	4.7 kOhm	5%	
	R.....21	57.11.4223	22 kOhm	5%	
	R.....22	57.11.4273	27 kOhm	5%	
	R.....23	57.11.4102	1 kOhm	5%	
	R.....24	57.11.4103	10 kOhm	5%	
	R.....25	57.11.4103	10 kOhm	5%	
	R.....26	57.11.4103	10 kOhm	5%	
	R.....27	57.11.4103	10 kOhm	5%	
	R.....28	57.11.4103	10 kOhm	5%	
	R.....29	57.11.4562	5.6 kOhm	5%	
	R.....30	57.11.4103	10 kOhm	5%	
	R.....31	57.11.4103	10 kOhm	5%	
	R.....32	57.11.4472	4.7 kOhm	5%	
	R.....33	57.11.4472	4.7 kOhm	5%	
	R.....34	57.11.4472	4.7 kOhm	5%	
	R.....35	57.11.4101	100 Ohm	5%	
	R.....36	57.11.4105	1 MOhm	5%	
	R.....37	57.11.4681	680 Ohm	5%	
	R.....38	57.11.4681	680 Ohm	5%	
	R.....39	57.11.4822	8.2 kOhm	5%	
	R.....40	57.11.4822	8.2 kOhm	5%	
	R.....41	58.05.0501	500 Ohm	10%	see Note 1
	TP.....1	29.21.6002			Testpoint
	TP.....2	29.21.6002			Testpoint
	TP.....3	29.21.6002			Testpoint
	TP.....4	29.21.6002			Testpoint

Note 1: Pot: Bourns, Nr.: 3296 Z-1-501
Spectrol, Nr.: 64 Z 501 T 000
Murata, Nr.: Pot 3105 Z-1-501

Note 2: Plug: 5-Pin AMP, NR.: --163.680-3

Note 3: Plug: 9-Pin AMP, Nr.: --163.680-7

Note 4: Plug: 3-Pin AMP, Nr.: --163.680-1

CE=Ceramic, EL=Electrolytic, PETP=Polyester Film

MANUFACTURER: Fc=Fairchild, GI=General Instruments, ITT=Intermetall,
Mot=Motorola, NS=National Semiconductors, Phs=Philips,
Sie=Siemens, St=Studer, TI=Texas Instruments

DRG 86/08/12

HALL SENSOR PCB 1.021.697.00

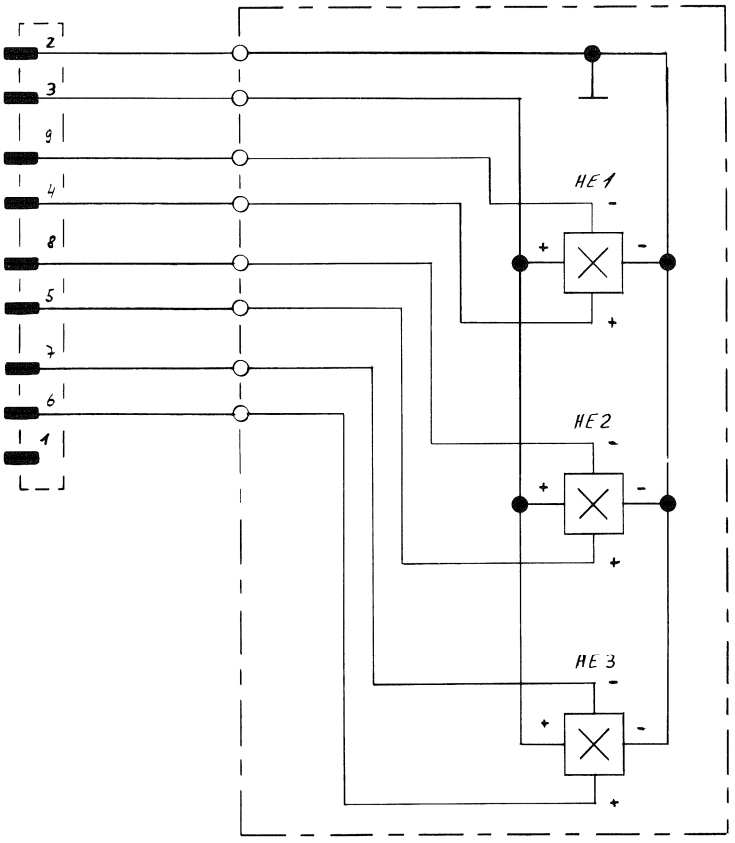

0 03.1284 Buk				
	A 820 Tape Transport Section			PAGE 1 OF 1
STUDER	Hall Sensor PCB		SC	1.021.697.00

TIME COUNTER CONTROL 1.820.861.00

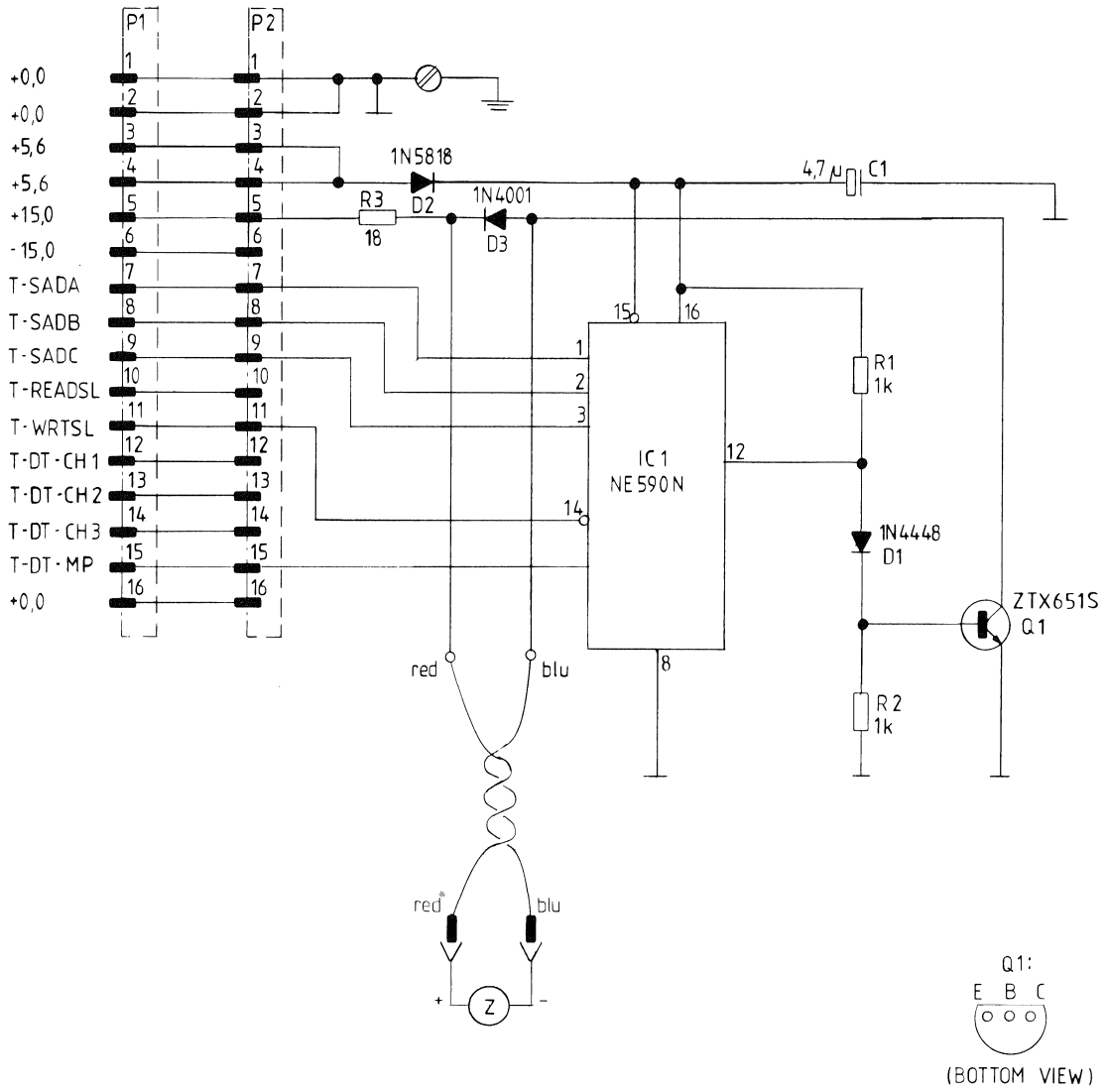

0 29.07.85 Fiala					
	A 820 Options				PAGE 1 OF 1
STUDER	Time Counter Control			SC	1.820.861.00

TIME COUNTER CONTROL 1.820.861.00

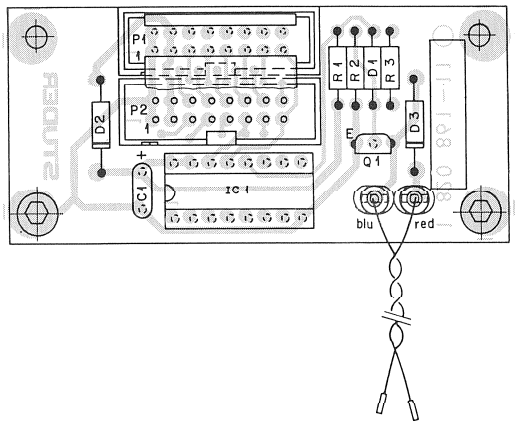

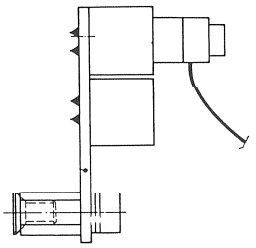

IND.	POS.NO.	PART NO.	VALUE	SPECIFICATIONS / EQUIVALENT	MANUF.
	C.....1	59.26.1479	4.7 uF	20%, 10V, Sal	Ph,Ri
	D.....1	50.04.0125	1N 4448		Fc,ITT,Ph,Ses,Tf
	D.....2	50.04.0512	1N 5818	1N 5819	Mot
	D.....3	50.04.0122	1N 4001	...1N 4004	ITT,Mot,R-Ohm
	IC.....1	50.15.0102	NE 590 N		Sig
	P.....1			see note 1	
	P.....2			see note 1	
	P.....3	54.02.0320		(two pieces)	
	Q.....1	50.03.0523	ZTX 651 S		Fe
	R.....1	57.11.4102	1 kOhm	5%	
	R.....2	57.11.4102	1 kOhm	5%	
	R.....3	57.19.0180	18 Ohm	Fuse resistor, Philips Nr. 2322 205 13189	

Note 1 - connector, 16 contacts:

Studer Nr.	54.14.2002
Yamaichi Nr.	FAP-16-08-40SS
Burndy Nr.	BPH 9 B 16 BO GS

Sal=Solid aluminium

MANUFACTURER: Fc=Fairchild, Fe=Ferranti, ITT=ITT Intermetall,
Mot=Motorola, Ph=Philips, Ri=Rifa, Sig=Signetics,
Tf=Telefunken.

ORIG 85/07/29

S T U D E R (00) 85/07/29 PB TIME COUNTER CONTROL BOARD 1.820.861.00 PAGE 1

7. Master Section

ESE = Electrostatically sensitive assembly

Contents		GRP/ELM	
MPU Master	1.820.784.20 ESE	GRP20/ELM49	7/1
Block diagram master serial interface	1.820.753.00 ESE	GRP20/ELM48	7/3
Master serial interface	1.820.753.82 ESE	GRP20/ELM48	7/5
Master to audio interface	1.820.756.00 ESE	GRP20/ELM51	7/7
Block diagram master section peripherals			7/9
Block diagram serial remote controller	1.820.751.00 ESE	GRP20/ELM50	7/11
Block diagram SMPTE/EBU-BUS interface	1.820.751.21 ESE	GRP20/ELM50	7/13
SMPTE/EBU-BUS interface	1.820.751.21 ESE	GRP20/ELM50	7/15
Block diagram parallel remote interface	1.820.738.00 ESE	GRP27	7/17
Parallel remote interface	1.820.738.81 ESE	GRP27	7/19
Parallel remote interface	1.820.738.82	GRP27	7/21
Parallel remote interface	1.820.738.83 ESE	GRP27	7/23
Block diagram serial remote interface	1.820.729.00 ESE	GRP26	7/25
Serial remote interface	1.820.729.24	GRP26	7/27
Serial remote interface	1.820.729.25	GRP26	7/29
Block diagram TD display driver	1.820.768.00 ESE	GRP50	7/31
TD display driver	1.820.768.81	GRP50	7/33
TD display driver	1.820.768.82 ESE	GRP50	7/35
Push button assembly	1.820.240.00 ESE	GRP48	7/37
- TD push button assembly	1.820.769.00 ESE	GRP48	7/39
- TD indicator	1.820.766.00 ESE	GRP48	7/41
Edit assembly	1.820.250.00 ESE	GRP49	7/43
- Cue sensor	1.820.765.00 ESE	GRP49	7/43
- Shuttle control	1.820.776.00 ESE	GRP49	7/43
Push button display	1.820.767.00 ESE	GRP51	7/45
LC display unit	1.820.233.83	GRP52	7/47
- LCD module	73.01.0125	GRP52	7/49
- LCD connector	1.820.797.82	GRP52	7/49

MP UNIT MASTER MCH 1.820.784.20

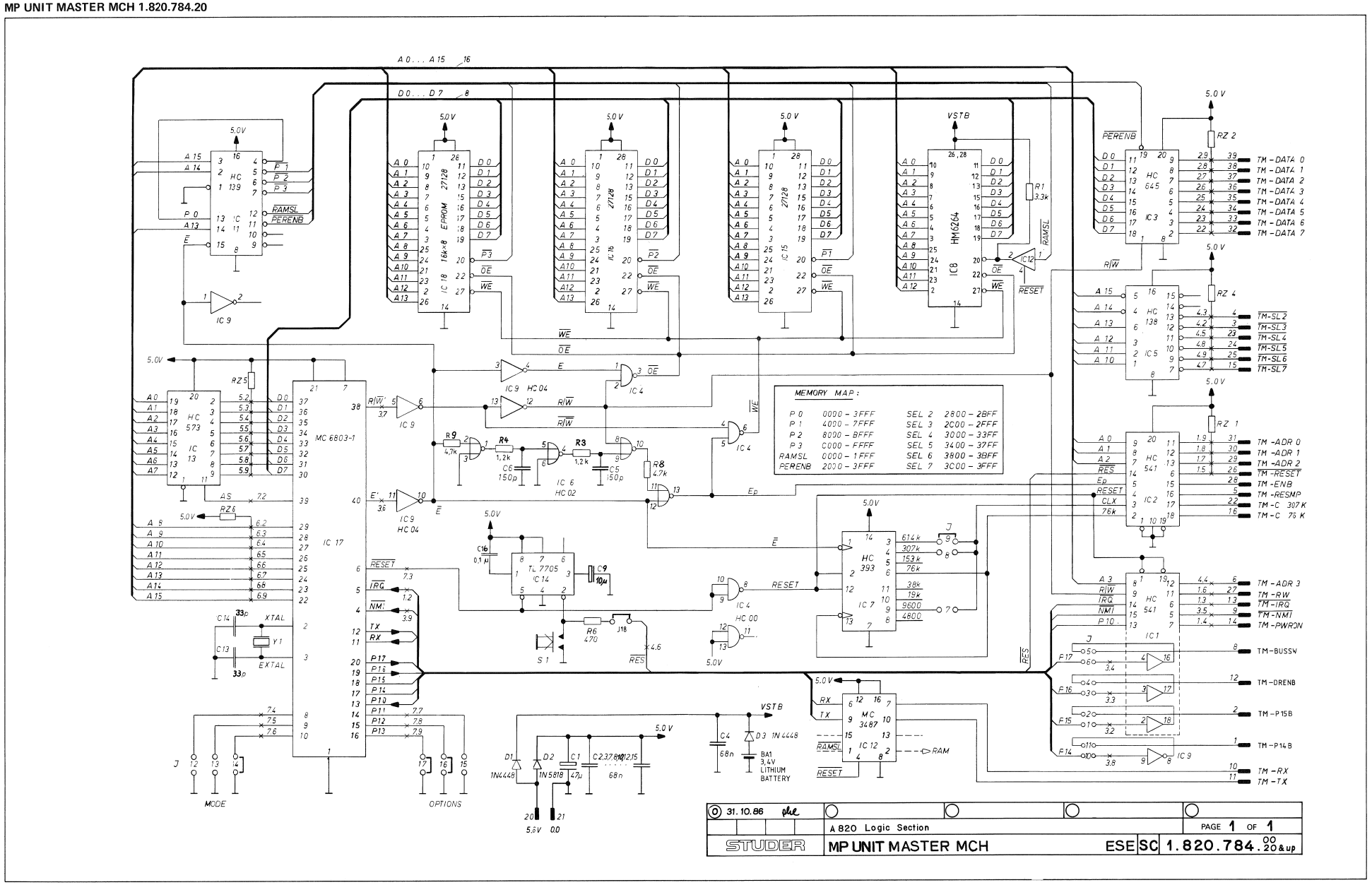

MP UNIT MASTER MCH 1.820.784.20

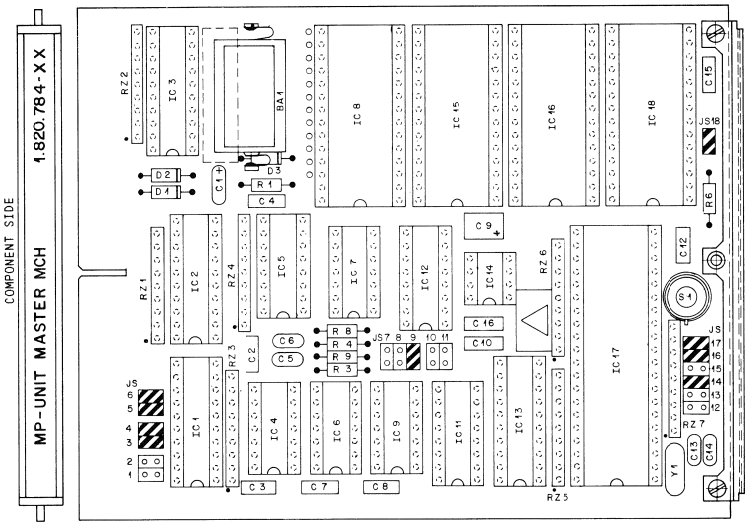

INSERTED
JS 3,4,5,6,9,14 16,17,18

IND.	POS.NO.	PART NO.	VALUE	SPECIFICATIONS / EQUIVALENT	MANUF.
	BA....1	89.01.0275		Batt. Lith., 3.6V, D 14.7X25.5	
	C.....1	59.26.0470	47 uF	20%, 6.3V, Sal	Ph
	C.....2	59.06.0683	68 nF	10%, 63V, PETP	
	C.....3	59.06.0683	68 nF	10%, 63V, PETP	
	C.....4	59.06.0683	68 nF	10%, 63V, PETP	
	C.....5	59.34.7151	150 pF	2%, Ce	
	C.....6	59.34.7151	150 pF	2%, Ce	
	C.....7	59.06.0683	68 nF	10%, 63V, PETP	
	C.....8	59.06.0683	68 nF	10%, 63V, PETP	
	C.....9	59.26.2100	10 uF	20%, 16V, Sal	
	C.....10	59.06.0683	68 nF	10%, 63V, PETP	
	C.....11	not used			
	C.....12	59.06.0683	68 nF	10%, 63V, PETP	
	C.....13	59.34.2330	33 pF	5%, Ce	
	C.....14	59.34.2330	33 pF	5%, Ce	
	C.....15	59.06.0683	68 nF	10%, 63V, PETP	
	C.....16	59.06.0104	100 nF	10%, 63V, PETP	
	D.....1	50.04.0125	1N 4448		Fc,ITT,Ph,Ses,Tf
	D.....2	50.04.0512	1N 5818	1N 5819	Mot
	D.....3	50.04.0125	1N 4448		Fc,ITT,Ph,Ses,Tf
	IC....1	50.17.1541	74 HC 541		Mot,NS,Ph,RCA,SGS,TI,To
	IC....2	50.17.1541	74 HC 541		Mot,NS,Ph,RCA,SGS,TI,To
	IC....3	50.17.1645	74 HC 645		Mot,NS,Ph,RCA,SGS,TI,To
	IC....4	50.17.1000	74 HC 00		Mot,NS,Ph,RCA,SGS,TI,To
	IC....5	50.17.1138	74 HC 138		Mot,NS,Ph,RCA,SGS,TI,To
	IC....6	50.17.1002	74 HC 02		Mot,NS,Ph,RCA,SGS,TI,To
	IC....7	50.17.1393	74 HC 393		Mot,NS,Ph,RCA,SGS,TI,To
	IC....8	50.14.0133	HM6264P-15	TC 5564-15	Hi,To
	IC....9	50.17.0004	74 HCT 04		Mot,NS,Ph,RCA,SGS,TI,To
	IC....10		not used		
	IC....11	50.17.1139	74 HC 139		Mot,NS,Ph,RCA,SGS,TI,To
	IC....12	50.15.0105	MC 3487 P	DS 3487 N	Mot,NS
	IC....13	50.17.1573	74 HC 573		Mot,NS,Ph,RCA,SGS,TI,To
	IC....14	50.11.0122	TL7705ACP		TI

IND.	POS.NO.	PART NO.	VALUE	SPECIFICATIONS / EQUIVALENT	MANUF.
	IC....15	50.14.0125	Z7128	HN 4827128G-30	Hi,It
	IC....16	50.14.0125	Z7128	HN 4827128G-30	Hi,It
	IC....17	50.16.0107	MC6803P-1	6803P-L	Mot,Hi
	IC....18	50.14.0125	Z7128	HN 4827128G-30	Hi,It
	JS....1			see note 2	
	JS....2			see note 2	
	JS....3			see note 2	
	JS....4			see note 2	
	JS....5			see note 2	
	JS....6			see note 2	
	JS....7			see note 2	
	JS....8			see note 2	
	JS....9			see note 2	
	JS....10			see note 2	
	JS....11			see note 2	
	JS....12			see note 2	
	JS....13			see note 2	
	JS....14			see note 2	
	JS....15			see note 2	
	JS....16			see note 2	
	JS....17			see note 2	
	JS....18			see note 2	
	MP....1	29.21.6002			
	MP....2	29.21.6002			
	R.....1	57.11.4332	3.3 kOhm	2%	
	R.....2		not used		
	R.....3	57.11.4122	1.2 kOhm	2%	
	R.....4	57.11.4122	1.2 kOhm	2%	
	R.....5		not used		
	R.....6	57.11.4471	470 Ohm	2%	
	R.....7		not used		
	R.....8	57.11.4472	4.7 kOhm	2%	
	R.....9	57.11.4472	4.7 kOhm	2%	

IND.	POS.NO.	PART NO.	VALUE	IFICATIONS / EQUIVALENT	MANUF.
	RZ....1	57.88.4332		see note 3	
	RZ....2	57.88.4332		see note 3	
	RZ....3	57.88.4332		see note 3	
	RZ....4	57.88.4332		see note 3	
	RZ....5	57.88.4332		see note 3	
	RZ....6	57.88.4332		see note 3	
	RZ....7	57.88.4332		see note 3	
	S.....1	55.03.0122		Chicago Switch 34-550-001	
	Y.....1	89.01.0560		4.9152 MHz, +-100 ppm	

Note 1 - IC15/16/18 : Software is delivered in a set only.

Note 2 - Contact pin: Studer Nr. 54.01.0020
Berg Nr. 75.160-102-36
Philips Nr. 2422 025 89303
Bridge: Studer Nr. 54.01.0021
Berg Nr. 65 474-001
Philips Nr. 2422 024 88003

Note 3 - Network: 8 x 3.3 kOhm, 5%
Sicowend Nr. CO9 x 3.3 k J
Ineltro Nr. R88 3.3 k 5%

Ce=Ceramic, Sal=Solid Aluminium, PETP=Polyesterfilm.

MANUFACTURER: Fc=Fairchild, Hi=Hitachi, ITT=Intermetall, Mot=Motorola, NS=National Semiconductors, OK=OKI, Ph=Philips, Ses=Sescosem, Tf=Telefunken, TI=Texas Instruments.

ORIG 86/10/31

BLOCK DIAGRAM
MASTER SERIAL INTERFACE 1.820.753

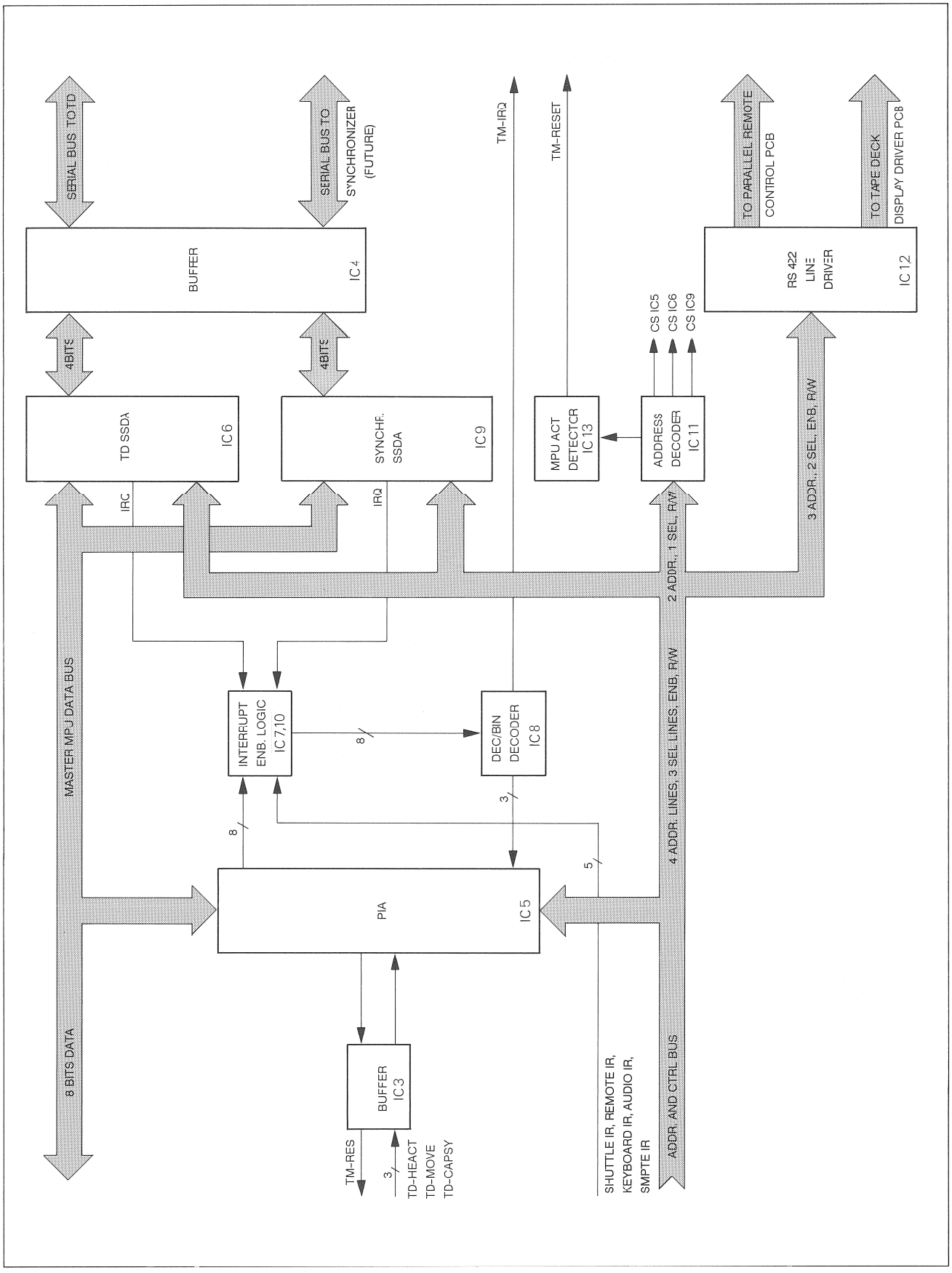

MASTER SERIAL INTERFACE 1.820.753.82

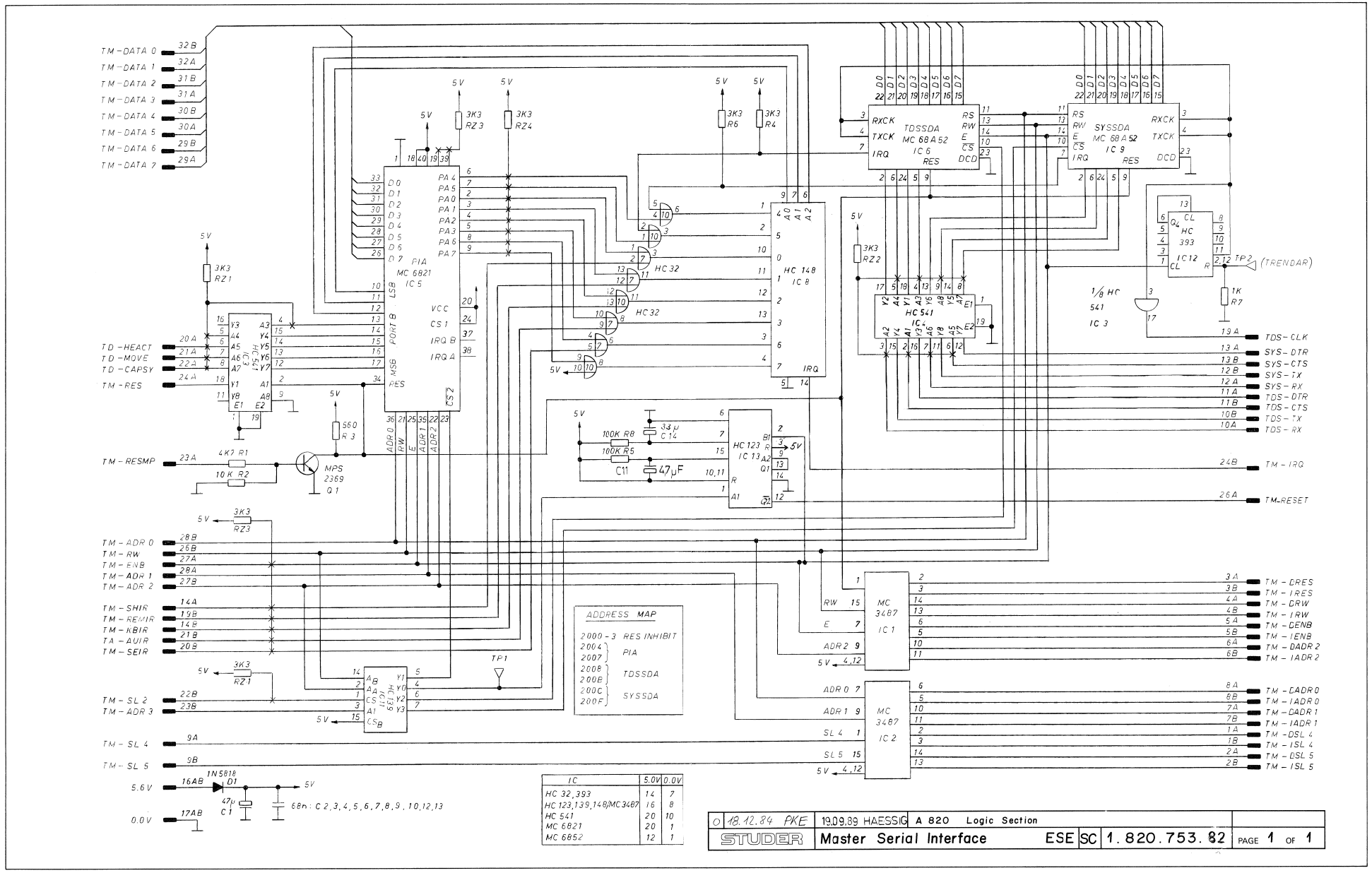

MASTER SERIAL INTERFACE 1.820.753.82

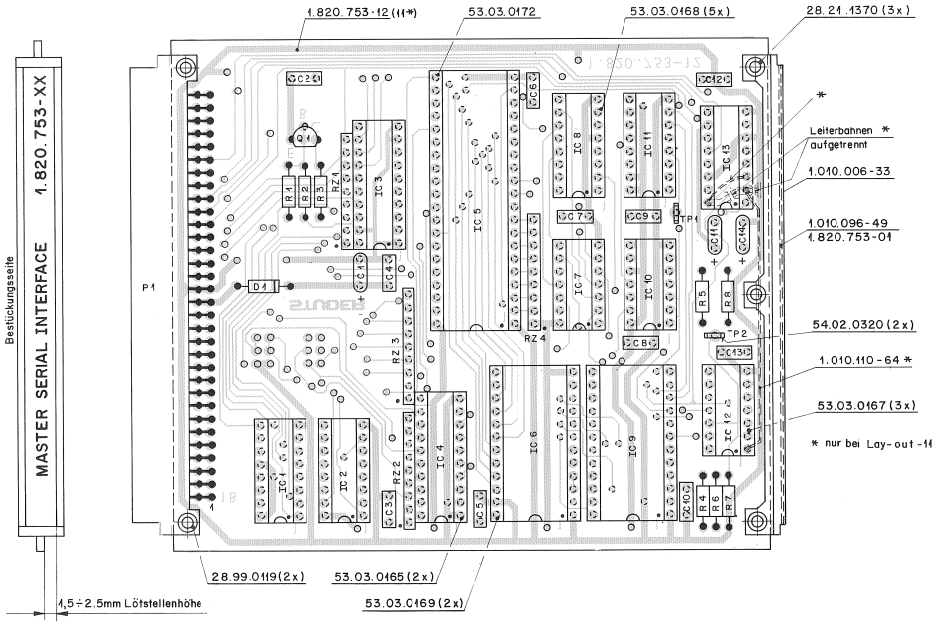

IND.	POS.NO.	PART NO.	VALUE	SPECIFICATIONS / EQUIVALENT	MANUF.
	C.....1	59.26.0470	47 uF	20%, 6.3V	Ph
	C.....2	59.06.0683	68 nF	20%	
	C.....3	59.06.0683	68 nF	20%	
	C.....4	59.06.0683	68 nF	20%	
	C.....5	59.06.0683	68 nF	20%	
	C.....6	59.06.0683	68 nF	20%	
	C.....7	59.06.0683	68 nF	20%	
	C.....8	59.06.0683	68 nF	20%	
	C.....9	59.06.0683	68 nF	20%	
	C.....10	59.06.0683	68 nF	20%	
	C.....11	59.26.1479	4.7 uF	20%, 6.3V	Ph
	C.....12	59.06.0683	68 nF	20%	
	C.....13	59.06.0683	68 nF	20%	
	C.....14	59.26.1330	33 uF	20%, 6.3V	Ph
	D.....1	50.04.0512	1N 5818	1N 5819	Mot
	IC....1	50.15.0105	MC 3487 P	DS 3487 N	Sie
	IC....2	50.15.0105	MC 3487 P	DS 3487 N	Sie
	IC....3	50.17.1541	74 HC 541		Ph,Mot,NS,RCA,To
	IC....4	50.17.1541	74 HC 541		Ph,Mot,NS,RCA,To
	IC....5	50.16.0106	MC68 A21P	F 68 A21PC	Mot,AMI,Fc
	IC....6	50.16.0114	MC68 A52	HD68 A52, S68A52	Mot,AMI,Hi
	IC....7	50.17.1032	74 HC 32		Mot,Nat,To,Ph,RCA
	IC....8	50.17.1148	74 HC 148		TI,To
(00)	IC....9	50.16.0114	MC68 A52	HD68 A52, S68A52	Mot,AMI,Hi
(01)	IC....9	not used		see note 3	
	IC....10	50.17.1032	74 HC 32		Mot,Nat,To,Ph,RCA
	IC....11	50.17.1139	74 HC 139		Ph,Mot,NS,RCA,To
	IC....12	50.17.1393	74 HC 393		Ph,Mot,NS,RCA,To
	IC....13	50.17.1123	74 HC 123		Ph,SGS,RCA,To
	P.....1	54.11.2004		Plug see note 2	
	Q.....1	50.03.0508	MPS 2369		Mot
	R.....1	57.11.4472	4.7 kOhm	5%	

STUDER (00) 89/09/19 HRH MASTER SERIAL INTERFACE PL 1.820.753.82 PAGE 1

IND.	POS.NO.	PART NO.	VALUE	SPECIFICATIONS / EQUIVALENT	MANUF.
	R.....2	57.11.4103	10 kOhm	5%	
	R.....3	57.11.4561	560 Ohm	5%	
	R.....4	57.11.4332	3.3 kOhm	10%	
	R.....5	57.11.4104	100 kOhm	5%	
	R.....6	57.11.4332	3.3 kOhm	10%	
	R.....7	57.11.4102	1.0 kOhm	5%	
	R.....8	57.11.4104	100 kOhm	5%	
	RZ....1	57.88.4332	3.3 kOhm	10% see note 2	
	RZ....2	57.88.4332	3.3 kOhm	10% see note 2	
	RZ....3	57.88.4332	3.3 kOhm	10% see note 2	
	RZ....4	57.88.4332	3.3 kOhm	10% see note 2	
	TP....1	54.02.0320		Testpoint	
	TP....2	54.02.0320		Testpoint	

Note 1 - Plug : 2 x 32 Euro board
Burndy PI 64 B 20 P00 F00 Z0
Erni 9722.563.191

Note 2 - Network : 8 x 3.3 kOhm, 5%, single line
Sicovend C09 X 3.3 K J
Ineltro 808 3.3 K 5%

Manufacturer: AMI=American Microsystem Inc., Fc=Fairchild,
Hi=Hitachi; Mot=Motorola; Nat=National (Matsushita),
NS=National Semiconductors, Ph=Philips (incl. Valvo),
RCA=Radio Corporation of America, SGS=SGS/Ates,
Sie=Siemens, To=Toshiba.

CRIG 89/09/19

STUDER (00) 89/09/19 HRH MASTER SERIAL INTERFACE PL 1.820.753.82 PAGE 2

MASTER TO AUDIO INTERFACE 1.820.756.00

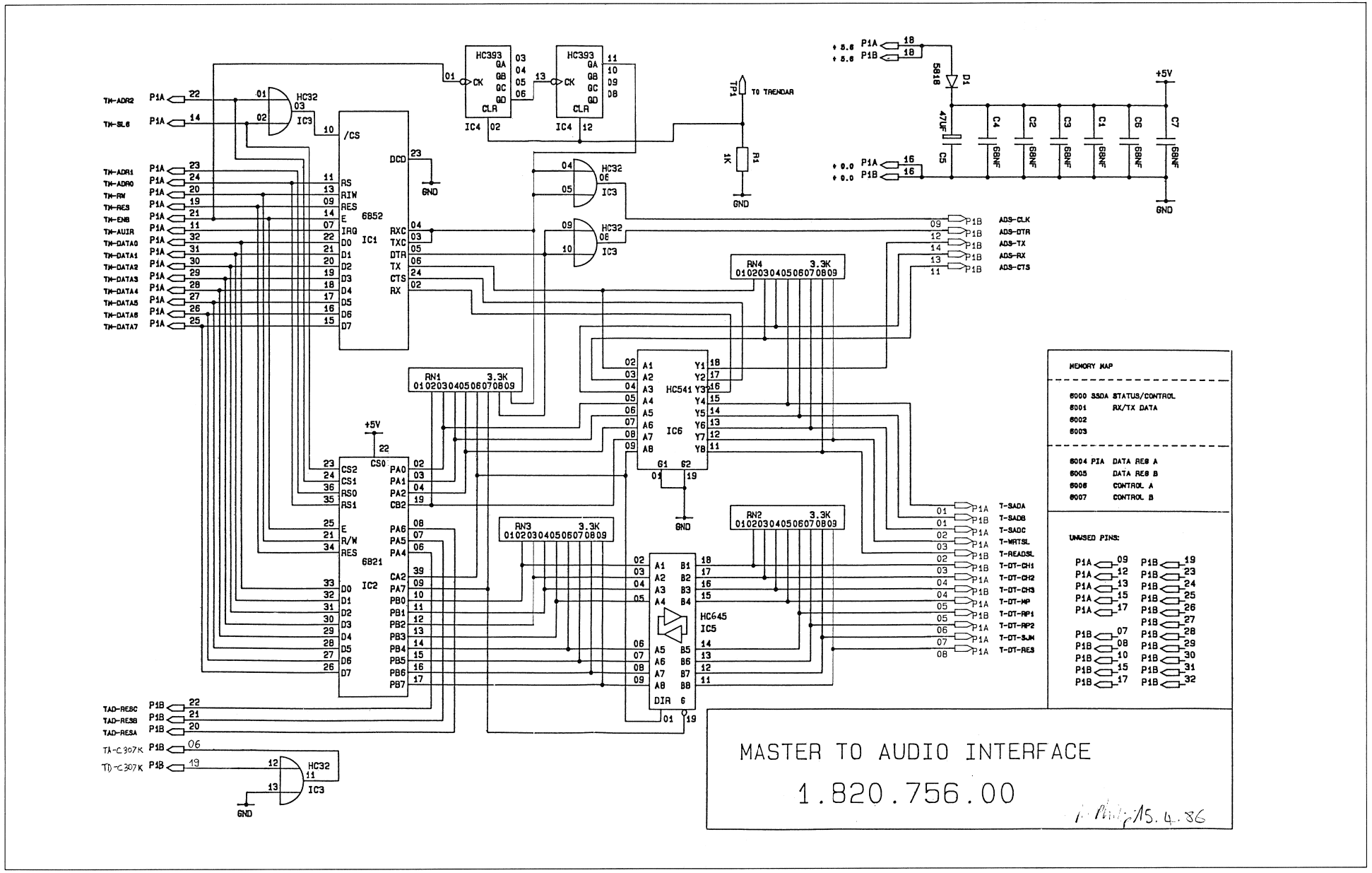

MASTER TO AUDIO INTERFACE 1.820.756.00

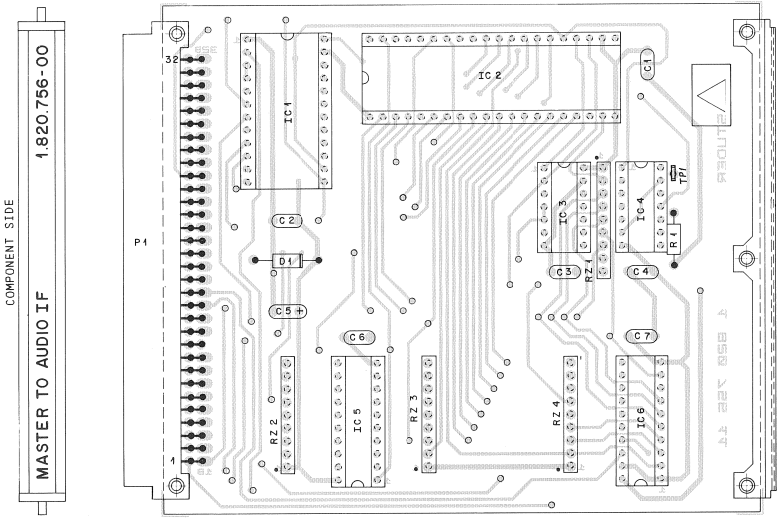

INC.	POS.NO.	PART NO.	VALUE	SPECIFICATIONS / EQUIVALENT	MANUF.
	C.....1	59.06.0683	68 nF	10%, 63V	
	C.....2	59.06.0683	68 nF	10%, 63V	
	C.....3	59.06.0683	68 nF	10%, 63V	
	C.....4	59.06.0683	68 nF	10%, 63V	
	C.....5	59.26.0470	47 uF	20%, 6.3V, Sal	Ph
	C.....6	59.06.0683	68 nF	10%, 63V	
	C.....7	59.06.0683	68 nF	10%, 63V	
	D.....1	50.04.0512	1N5818	1N 5819	Mot
	IC....1	50.16.0114	MC68A52P	HD68A52P, S68A52P	AMI+Hi+Mot
	IC....2	50.16.0106	MC68A21P	S68A21P, F68A21P	AMI+Fc+Mot
	IC....3	50.17.1032	MC74HC 32N	=.74HC 32N	Mot+NS+Ph+RCA+SGS+TI+To
	IC....4	50.17.1393	MC74HC393N	=.74HC393N	Mot+NS+Ph+RCA+SGS+TI+To
	IC....5	50.17.1645	MC74HC645N	=.74HC245N	Mot+NS+Ph+RCA+SGS+TI+To
	IC....6	50.17.1541	MC74HC541N	=.74HC541N	Mot+NS+Ph+RCA+SGS+TI+To
	P.....1	54.11.2004		see note 1	
	R.....1	57.11.4102	1 kOhm	2%	
	RZ....1	57.88.4332		see note 2	
	RZ....2	57.88.4332		see note 2	
	RZ....3	57.88.4332		see note 2	
	RZ....4	57.88.4332		see note 2	
	TP....1	54.02.0320		Testpoint	

INC.	POS.NO.	PART NO.	VALUE	SPECIFICATIONS / EQUIVA.ENT	MANUF.

Note 1 - connector, 2 * 32 contacts:
Erni nr. 9722.933.406
Harting nr. 0902 164 6921
Souriau nr. 8609.264.51.13.765.000 E1

Note 2 - Network 8 * 3.3 kOhm, 5%, single line:
Allen Bradley nr. 909 A 332
Beckmann nr. L - 09 - 1 - R 3.3 k
Bourns nr. 4609 M - 101 - 332
Dale nr. CSC 09 A 01 - 332 G
Sprague nr. 296 C J 332 K2 PD
Tama nr. MRG C 09 X 3.3 kOhm G
Vitrom nr. F9E 3.3 kOhm 2%

Sal=Solid aluminium

MANUFACTURER: AMI=American Microsystem Inc., Fc=Fairchild, Hi=Hitachi,
Mot=Motorola, NS=National Semiconductors, Ph=Philips,
RCA=RCA Corporation of America, SGS=SGS-Ates,
TI=Texas Instruments, To=Toshiba.

ORG 86/10/14

BLOCK DIAGRAM
MASTER SECTION PERIPHERALS

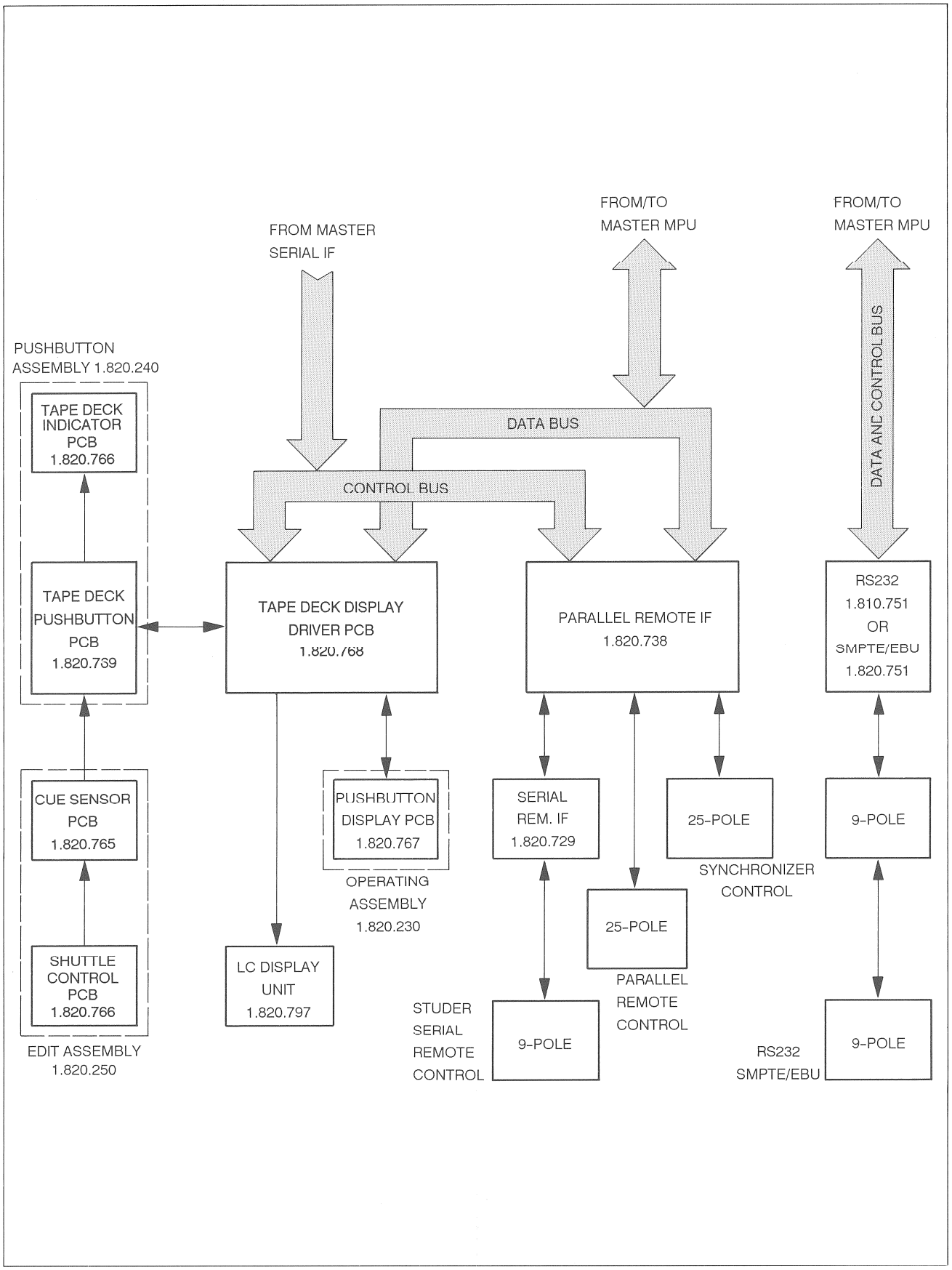

BLOCK DIAGRAM
SERIAL REMOTE CONTROLLER 1.810.751

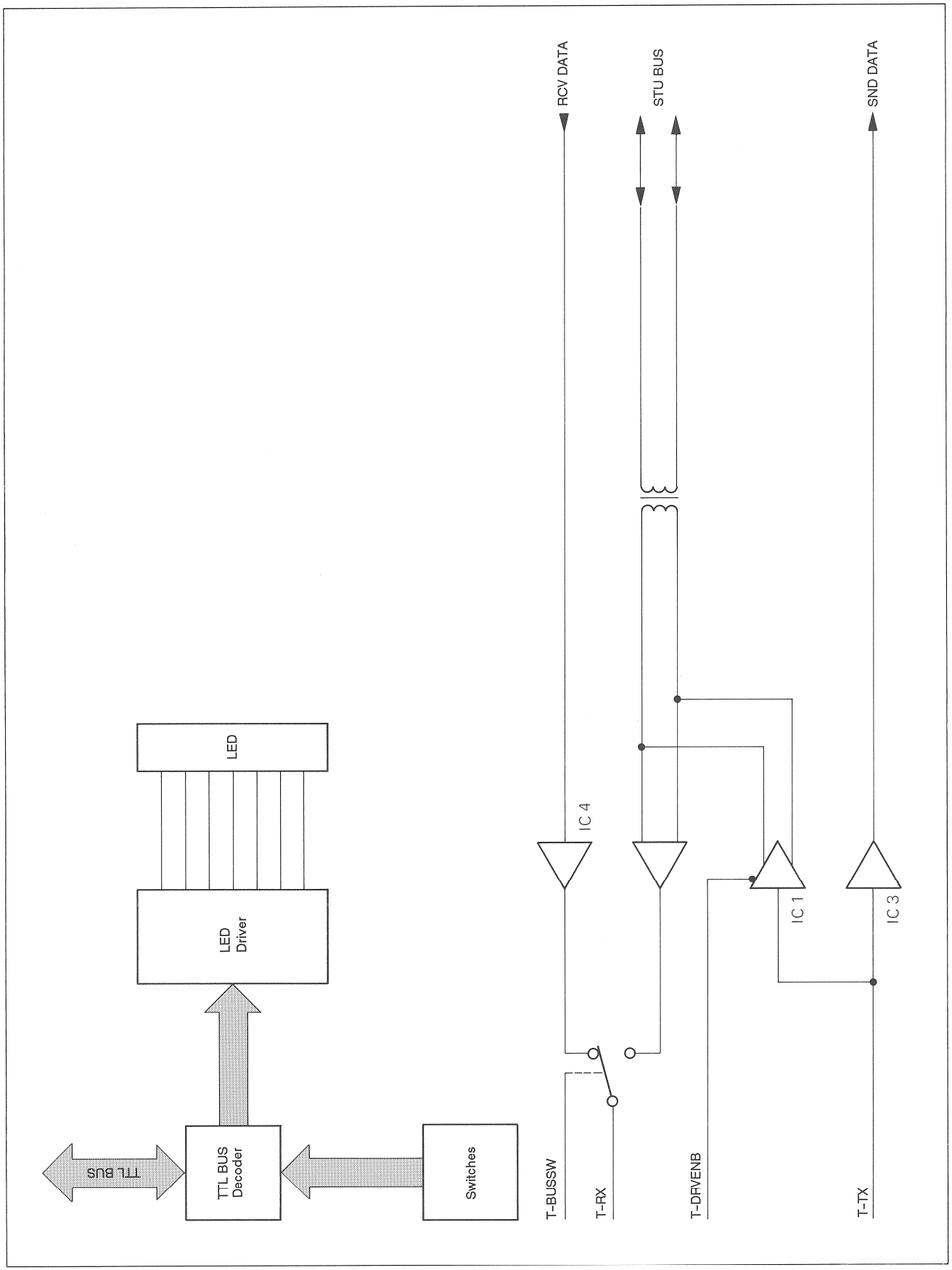

SERIAL REMOTE CONTROLLER 1.810.751.82

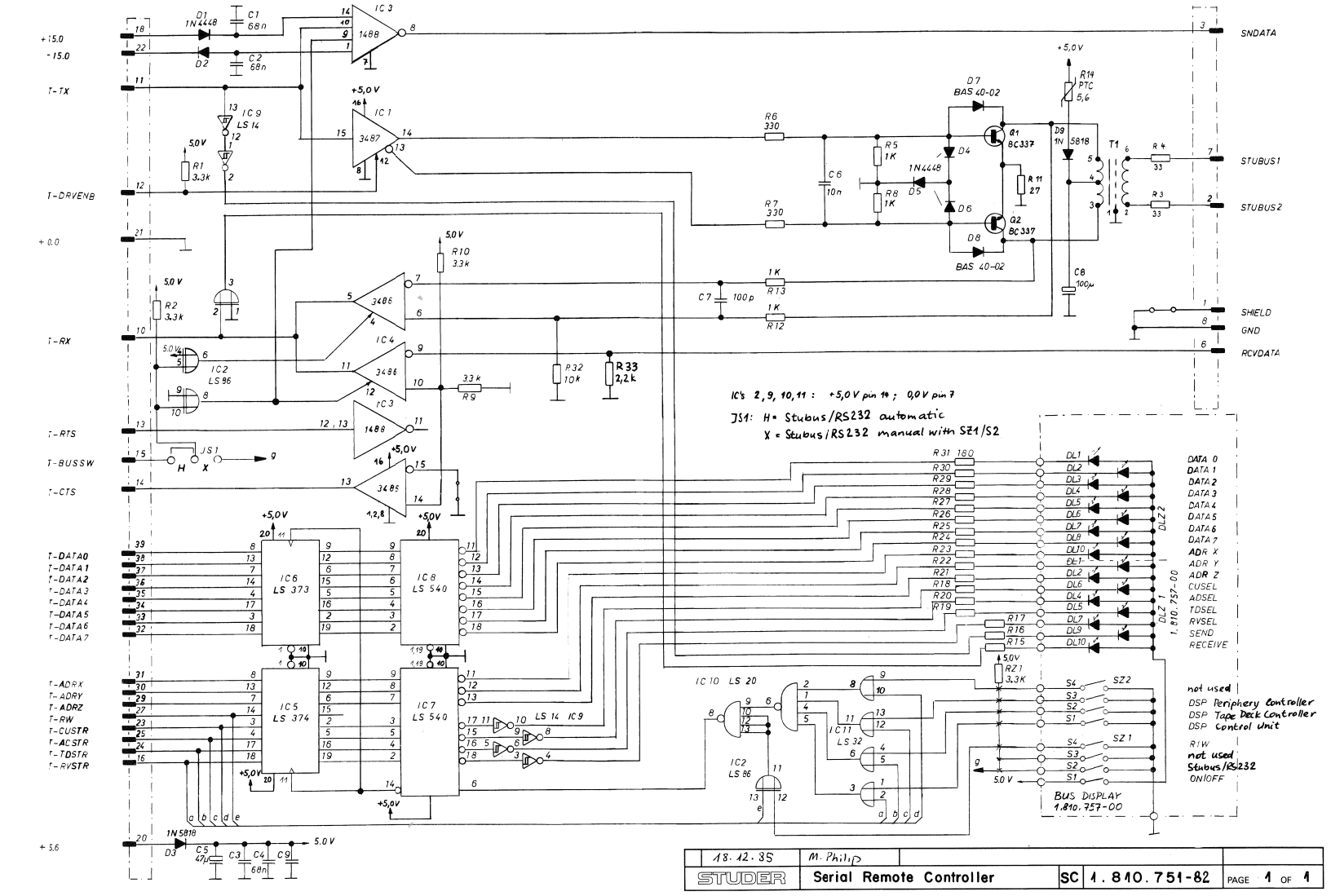

SERIAL REMOTE CONTROLLER 1.810.751.82

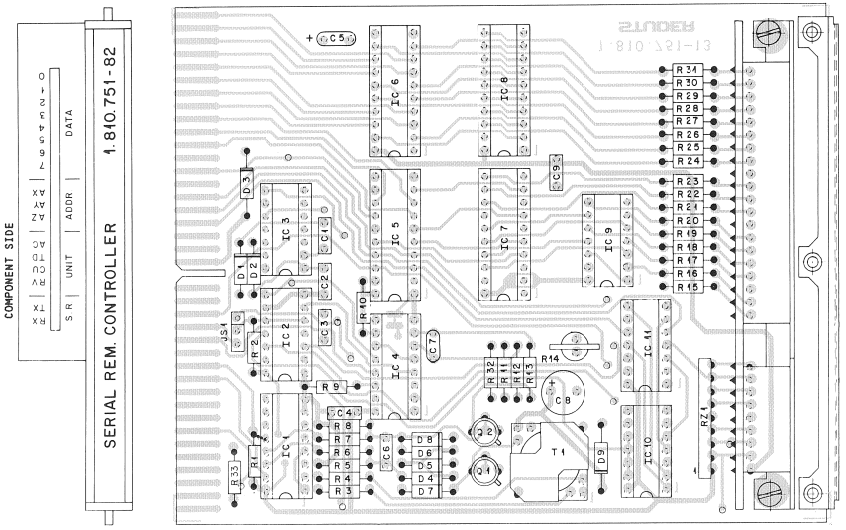

IND.	POS.NO.	PART NO.	VALUE	SPECIFICATIONS / EQUIVALENT	MANUF.
A	1	1.810.757.00		Bus display board	
C	1	59.99.0205	68 nF	-20%, Ce	
C	2	59.99.0205	68 nF	-20%, Ce	
C	3	59.99.0205	68 nF	-20%, Ce	
C	4	59.99.0205	68 nF	-20%, Ce	
C	5	59.26.0470	47 uF	20%, 6.3 V, Sal	
C	6	59.06.0103	10 nF	10%, PETP	
C	7	59.34.1101	100 pF	2%, Ce	
C	8	59.22.3101	100 uF	10%, 10 V, El	
C	9	59.99.0205	68 nF	-20%, Ce	
D	1	50.04.0125	1N4448		ITT,Phs,Ses,TI
D	2	50.04.0125	1N4448		ITT,Phs,Ses,TI
D	3	50.04.0512	1N5818	1N5819	Mot
D	4	50.04.0125	1N4448		ITT,Phs,Ses,TI
D	5	50.04.0125	1N4448		ITT,Phs,Ses,TI
D	6	50.04.0125	1N4448		ITT,Phs,Ses,TI
D	7	50.04.0127	BAT85	BAS40-02	Phs,Sie
D	8	50.04.0127	BAT85	BAS40-02	Phs,Sie
D	9	50.04.0512	1N5818	1N5819	Mot
IC	1	50.15.0105	MC3487	DS3487	Mot,SGS
IC	2	50.06.0086	SN74LS 86N	DM74LS 86N, 74LS 86PC	Fc,NS,Sig,TI
IC	3	50.15.0106	MC1488		Mot
IC	4	50.15.0104	MC3486P	DS3486	Mot,NS
IC	5	50.06.0374	AM74LS374N	SN74LS374N, DM74LS374N	AMD,NS TI
IC	6	50.06.0373	SN74LS373N	N74LS373N	Mot,Sig,TI
IC	7	50.06.0540	SN74LS540N	74LS540PC	Fc,Mot,TI
IC	8	50.06.0540	SN74LS540N	74LS540PC	Fc,Mot,TI
IC	9	50.06.0014	SN74LS 14N	DM74LS 14N, 74LS 14PC	Fc,NS,Sig,TI
IC	10	50.06.0020	SN74LS 20N	DM74LS 20N, 74LS 20PC	Fc,NS,Sig,TI
IC	11	50.06.0032	SN74LS 32N	DM74LS 32N, 74LS 32PC	Fc,NS,Sig,TI
JS	1			See note 1	
Q	1	50.03.0434	BFR18		SGS

S T U D E R (00) 85/12/18 PHM SERIAL REMOTE CONTROLLER 1.810.751.82 PAGE 1

IND.	POS.NO.	PART NO.	VALUE	SPECIFICATIONS / EQUIVALENT	MANUF.
Q	2	50.03.0434	BFR18		SGS
R	1	57.11.4332	3.3 kOhm	2%	
R	2	57.11.4332	3.3 kOhm	2%	
R	3	57.11.4330	33 Ohm	2%	
R	4	57.11.4330	33 Ohm	2%	
R	5	57.11.4102	1 kOhm	2%	
R	6	57.11.4331	330 Ohm	2%	
R	7	57.11.4331	330 Ohm	2%	
R	8	57.11.4102	1 kOhm	2%	
R	9	57.11.4332	3.3 kOhm	2%	
R	10	57.11.4332	3.3 kOhm	2%	
R	11	57.11.4270	27 Ohm	2%	
R	12	57.11.4102	1 kOhm	2%	
R	13	57.11.4102	1 kOhm	2%	
R	14	57.99.0209	5.6 Ohm	PTC Resistor, Philips Nr. 2322 662 91005	
R	15	57.11.4180	180 Ohm	2%	
R	16	57.11.4180	180 Ohm	2%	
R	17	57.11.4180	180 Ohm	2%	
R	18	57.11.4180	180 Ohm	2%	
R	19	57.11.4180	180 Ohm	2%	
R	20	57.11.4180	180 Ohm	2%	
R	21	57.11.4180	180 Ohm	2%	
R	22	57.11.4180	180 Ohm	2%	
R	23	57.11.4180	180 Ohm	2%	
R	24	57.11.4180	180 Ohm	2%	
R	25	57.11.4180	180 Ohm	2%	
R	26	57.11.4180	180 Ohm	2%	
R	27	57.11.4180	180 Ohm	2%	
R	28	57.11.4180	180 Ohm	2%	
R	29	57.11.4180	180 Ohm	2%	
R	30	57.11.4180	180 Ohm	2%	
R	31	57.11.4180	180 Ohm	2%	
R	32	57.11.4103	10 kOhm	2%	
R	33	57.11.4222	2.2 kOhm	2%	
R	*	57.88.4332	3.3 kOhm	See note 2	

S T U D E R (00) 85/12/18 PHM SERIAL REMOTE CONTROLLER 1.810.751.82 PAGE 2

IND.	POS.NO.	PART NO.	VALUE	SPECIFICATIONS / EQUIVALENT	MANUF.
T	1	1.022.223.00		Studio Bus Transformer	St

Note 1 - Contact pin: Studer Nr. 54.11.0126
Berg Nr. 75219-318-36
Metroplast Nr. SL 1/25/36 Z
Commatel Nr. 386 0350 1 36 440
Bridge: Studer Nr. 54.01.0021
Metroplast Nr. CA81 / 8
Commatel Nr. Z 030 946-8

Note 2 - Network: 8 * 3.3 kOhm, 5%
Sicovend Nr. C09 x 3.3 k J
Inetro Nr. R88 3.3 k 5%

Ce=Ceramic, El=Electrolytic, Sal=Solid aluminium, PETP=Polyester

MANUFACTURER: AMD=Advanced Micro Devices, Fc=Fairchild,
ITT=Intermetall, Mot=Motorola,
NS=National Semiconductors, Phs=Philips, Ses=Sescosem,
SGS=SGS-Ates, Sie=Siemens, Sig=Signetics, St=Studer,
TI=Texas Instruments,

ORIG 85/12/18

S T U D E R (00) 85/12/18 PHM SERIAL REMOTE CONTROLLER 1.810.751.82 PAGE 3

BUS DISPLAY PCB 1.810.751

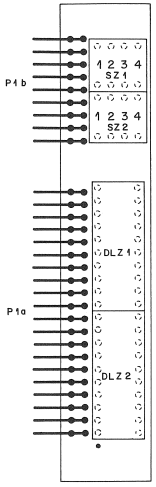

BUS DISPLAY PCB 1.810.757
SOLDERED ONTO RS232/DATA
SAVE INTERFACE 1.810.751

IND.	POS.NO.	PART NO.	VALUE	SPECIFICATIONS / EQUIVALENT	MANUF.
DLZ	1	50.34.2134	MV5716AF	MV5716AG	GI
DLZ	2	50.04.2134	MV5716AF	MV5716AG	GI
SZ	1	55.01.0164		Switch Array, AMP 0-161 391-4, SAE 1004-692	
SZ	2	55.01.0164		Switch Array, AMP 0-161 391-4, SAE 1004-692	
P	1a	54.01.0261	20 cont.	AMP 1-163.740-9	
P	1b	54.01.0220	9 cont.	AMP 163.740-7	

MANUFACTURER: GI=General Instruments

ORIG 82/06/23

S T U D E R (03) 82/06/23 DSC BUS DISPLAY 1.810.757.00 PAGE 1

BLOCK DIAGRAM
SMPTE/EBU BUS INTERFACE 1.820.751.21

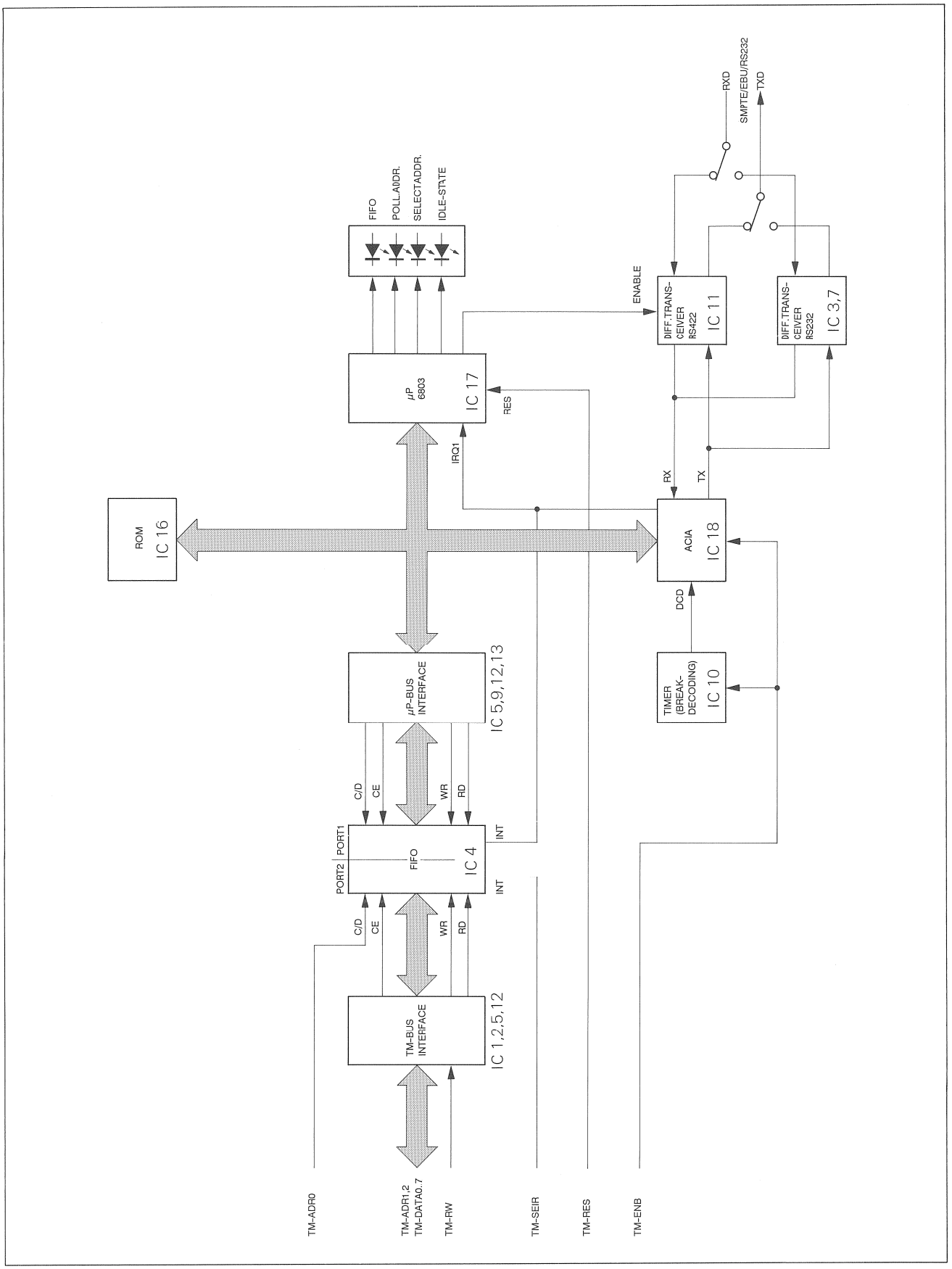

SMPTE EBU BUS INTERFACE 1.820.751.21

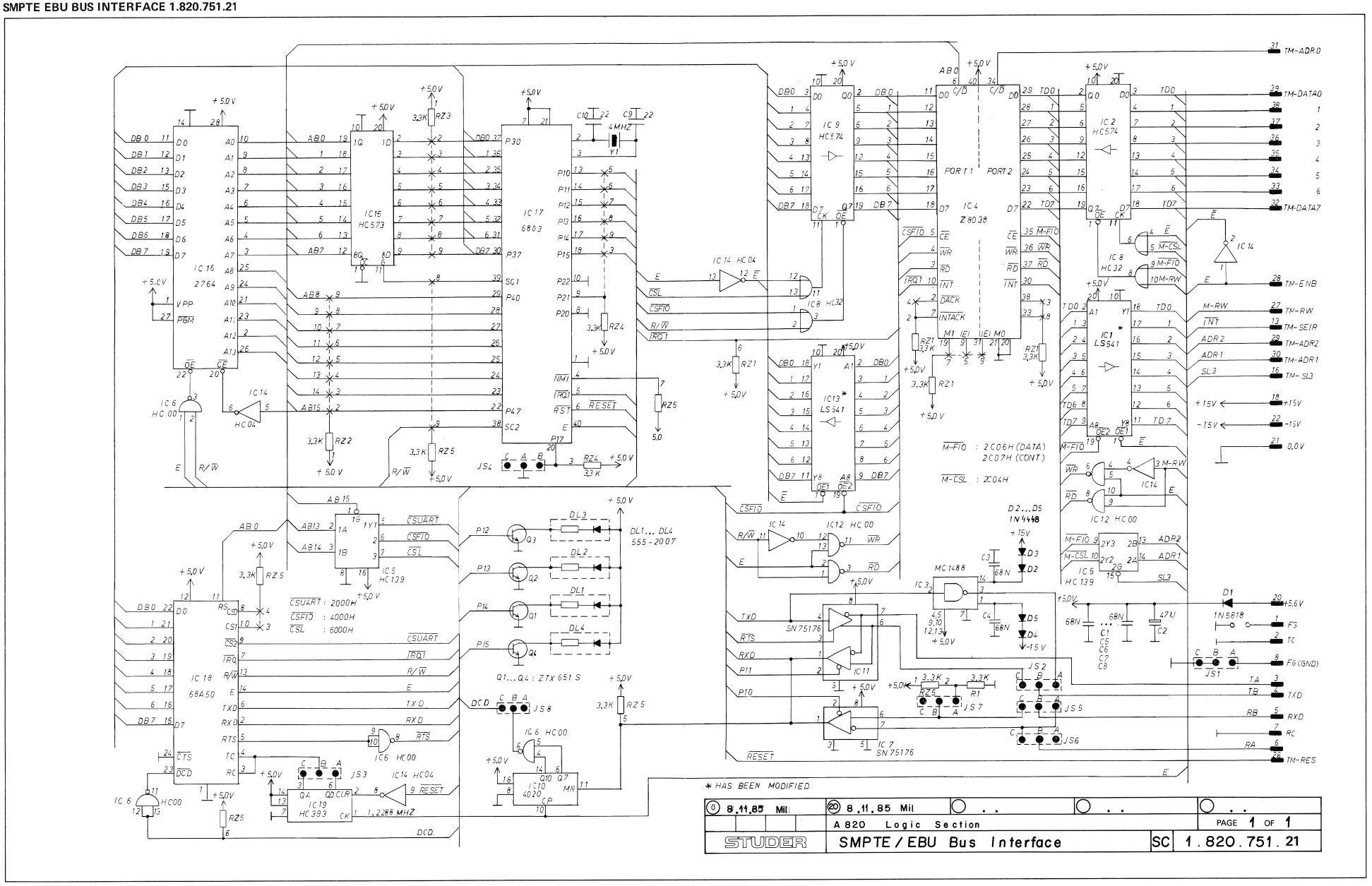

SMPTE EBU BUS INTERFACE 1.820.751.21

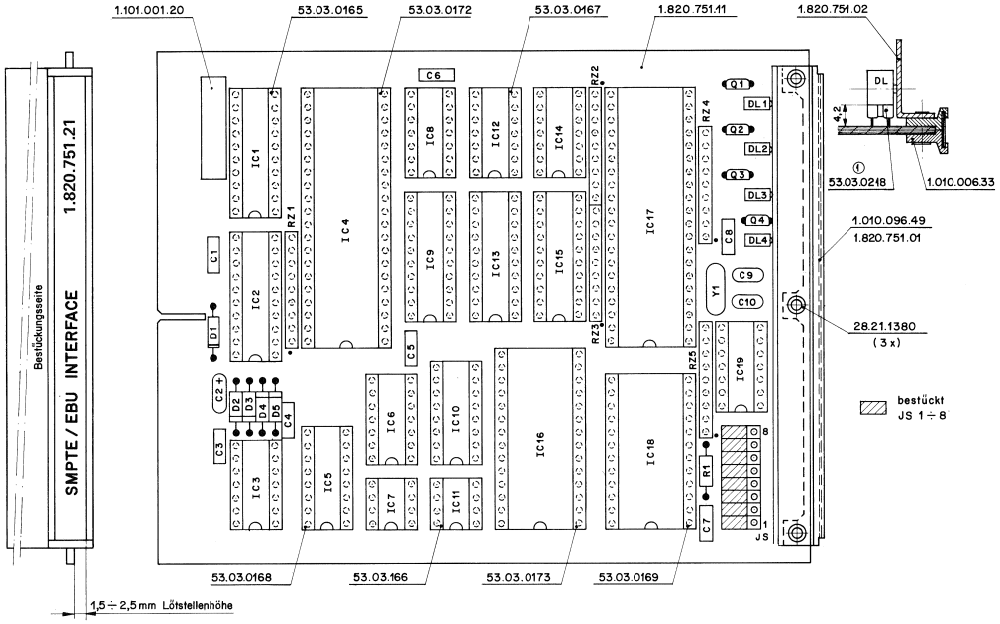

IND.	POS.NO.	PART NO.	VALUE	SPECIFICATIONS / EQUIVALENT	MANUF.
(20)	C.....1	59.36.0683	68 nF	10%, PETP	
(20)	C.....2	59.26.0470	47 uF	20%, 6.3V, SAL	
(20)	C.....3	59.36.0683	68 nF	10%, PETP	
(20)	C.....4	59.36.0683	68 nF	10%, PETP	
(20)	C.....5	59.36.0683	68 nF	10%, PETP	
(20)	C.....6	59.36.0683	68 nF	10%, PETP	
(20)	C.....7	59.36.0683	68 nF	10%, PETP	
(20)	C.....8	59.36.0683	68 nF	10%, PETP	
(20)	C.....9	59.34.2220	22 pF	5%, CER	
(20)	C.....10	59.34.2220	22 pF	5%, CER	
(20)	D.....1	50.34.0512	1N 5818	1N 5819	Mot
(23)	D.....2	50.04.0125	1N 4448		Fe,ITT,Phi,Ses,TF
(23)	D.....3	50.04.0125	1N 4448		Fe,ITT,Phi,Ses,TF
(23)	D.....4	50.04.0125	1N 4448		Fe,ITT,Phi,Ses,TF
(23)	D.....5	50.04.0125	1N 4448		Fe,ITT,Phi,Ses,TF
(20)	DL....1	50.04.2107	555-2007		DI
(20)	DL....2	50.04.2107	555-2007		DI
(20)	DL....3	50.04.2107	555-2007		DI
(20)	DL....4	50.04.2107	555-2007		DI
(20)	IC....1	50.36.0541	74 LS 541	..74 LS 541..	Mot,NS,Phi,RCA,SGS,TI,To
(20)	IC....2	50.17.1574	74 HC 574	..74 HC 574..	Mot,NS,Phi,RCA,SGS,TI,To
(23)	IC....3	50.15.0106	MC 1488 P		Mot
(20)	IC....4	50.16.0118	Z 8038 PS	Z 8038 DC	AMD,Zy
(20)	IC....5	50.17.2139	74 HC 139	..74 HC 139..	Mot,NS,Phi,RCA,SGS,TI,To
(20)	IC....6	50.17.1000	74 HC 00	..74 HC 00..	Mot,NS,Phi,RCA,SGS,TI,To
(23)	IC....7	50.15.0115	SN75176AP	DS 3695 N	NS,TI
(20)	IC....8	50.17.1032	74 HC 32	..74 HC 32..	Mot,NS,Phi,RCA,SGS,TI,To
(23)	IC....9	50.17.1574	74 HC 574	..74 HC 574..	Mot,NS,Phi,RCA,SGS,TI,To
(23)	IC....10	50.07.0020	MC14020BCP	....4020....	Mot,NS,Phi,RCA,To
(20)	IC....11	50.15.0115	SN75176AP	DS 3695 N	NS,TI
(20)	IC....12	50.17.1000	74 HC 00	..74 HC 00..	Mot,NS,Phi,RCA,SGS,TI,To
(20)	IC....13	50.36.0541	74 LS 541	..74 LS 541..	Mot,NS,Phi,RCA,SGS,TI,To
(23)	IC....14	50.17.1004	74 HC 04	..74 HC 04..	Mot,NS,Phi,RCA,SGS,TI,To
(23)	IC....15	50.17.1573	74 HC 573	..74 HC 573..	Mot,NS,Phi,RCA,SGS,TI,To

IND.	POS.NO.	PART NO.	VALUE	SPECIFICATIONS / EQUIVALENT	MANUF.
(03)	IC....16	50.14.0113	D 2764-3	.... 2764	Hi,It,SGS,TI
(23)	IC....16	1.820.993.20		Software 48/89, SMPTE/EBU IF	St
(23)	IC....17	50.16.0107	MC6803 P-1	HD6803 P-1	Hi,Mot
(20)	IC....18	50.15.0101	MC68 A 50P	S 68 A 50	AMI,Mot
(23)	IC....19	50.17.1393	74 HC 393	..74 HC 393..	Mot,NS,Phi,RCA,SGS,TI,To
(23)	JS....1			See note 1	
(20)	JS....2			See note 1	
(23)	JS....3			See note 1	
(23)	JS....4			See note 1	
(23)	JS....5			See note 1	
(20)	JS....6			See note 1	
(23)	JS....7			See note 1	
(20)	JS....8			See note 1	
(23)	J.....1	50.33.0523	ZTX 651 S		Fe
(20)	J.....2	50.33.0523	ZTX 651 S		Fe
(23)	J.....3	50.33.0523	ZTX 651 S		Fe
(23)	J.....4	50.33.0523	ZTX 651 S		Fe
(20)	R.....1	57.11.4332	3.3 kOhm	5%	
(23)	RZ....1	57.88.4332		see note 2	
(20)	RZ....2	57.88.4332		see note 2	
(23)	RZ....3	57.88.4332		see note 2	
(20)	RZ....4	57.88.4332		see note 2	
(23)	RZ....5	57.88.4332		see note 2	
(23)	Y.....1	89.01.0550		4.000 MHz, +- 40 ppm	

(20) (01) 86-06-12 Compatibility of logic levels, use of low power schottky logic for IC 1 and IC 13.

Note 1 - Jumper switch

Contact Pin: Studer Nr. 54.01.0020
Berg Nr. 77 311-102-36
Philips Nr. 2422 062 43241
Fawag Nr. AS 1-03a/050-36 G-0.75u Au

Bridge: Studer Nr. 54.01.0021
Berg Nr. 65 474-001
Philips Nr. 2422 024 88003
AMP Nr. 141 767-1

Note 2 - Resistor network 8 P 3.3 kOhm, 5%

Bourns Nr. 4609 X - 101 332
Beckmann Nr. L - 09 - 1 - R 3x3 k J
Sprague Nr. 256 C J 332 X Z PD
Matsushita Nr. R 9 E 3.3 k 5%
Tawa Nr. MRG C 09 X 3.3 k J

CER=Ceramic, PETP=Polyesterfilm, SAL=Solid Aluminium.

MANUFACTURERS: AMD=Advanced Micro Devices, AMI=American Microsystem Inc., Da=Dale, Fe=Fairchild, Fa=Ferranti, Hi=Hitachi, It=Intel, ITT=Intermetall, Mot=Motorola, NS=National Semiconductors, Phi=Philips, RCA=RCA Corporation, Ses=Sescosem, SGS=SGS/Ates, St=Studer, TF=Telefunken, TI=Texas Instruments, To=Toshiba, Zy=Zylog.

ORIG 86/06/12

BLOCK DIAGRAM
PARALLEL REMOTE INTERFACE 1.820.738

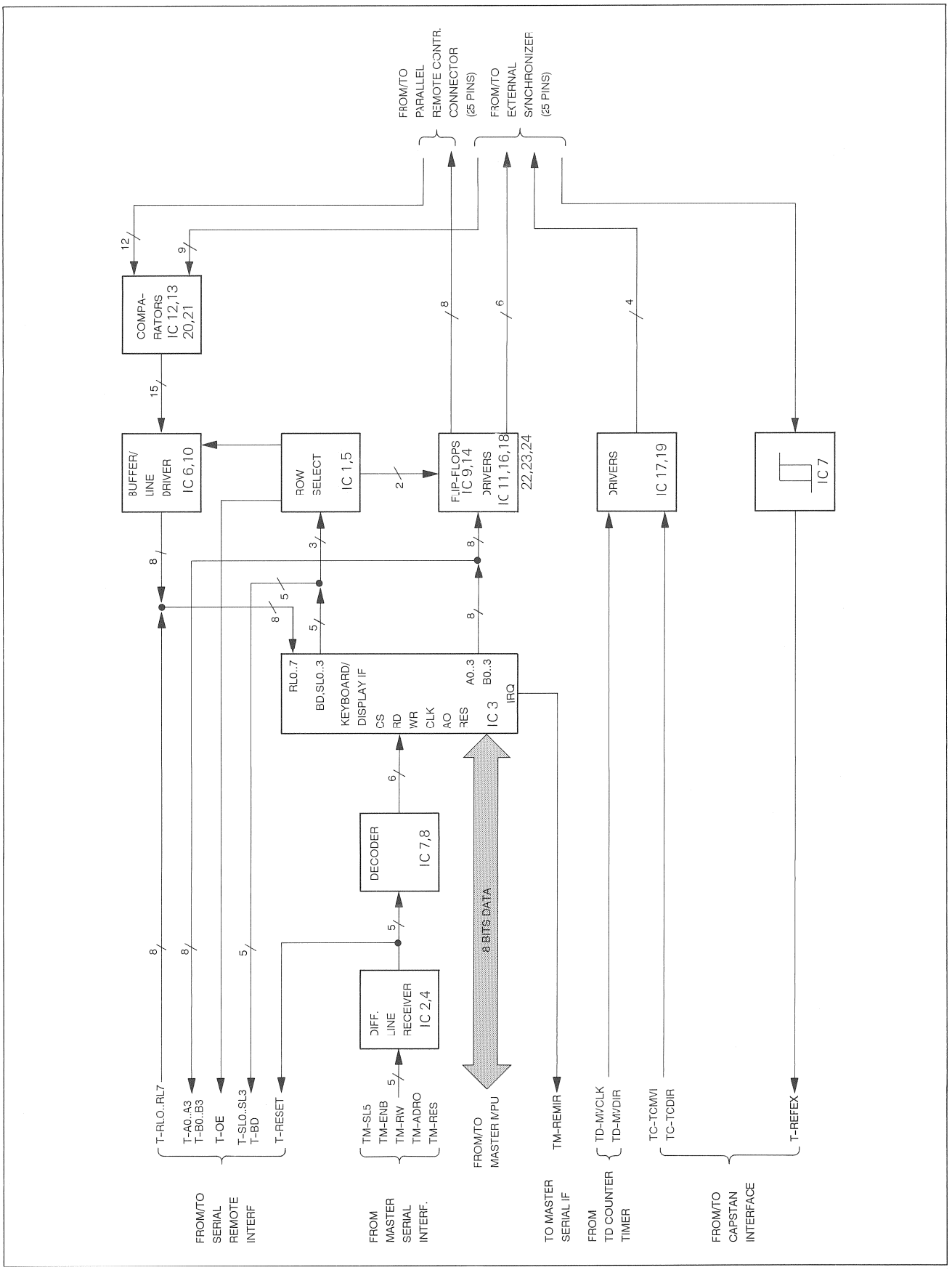

PARALLEL REMOTE INTERFACE 1.820.738.81

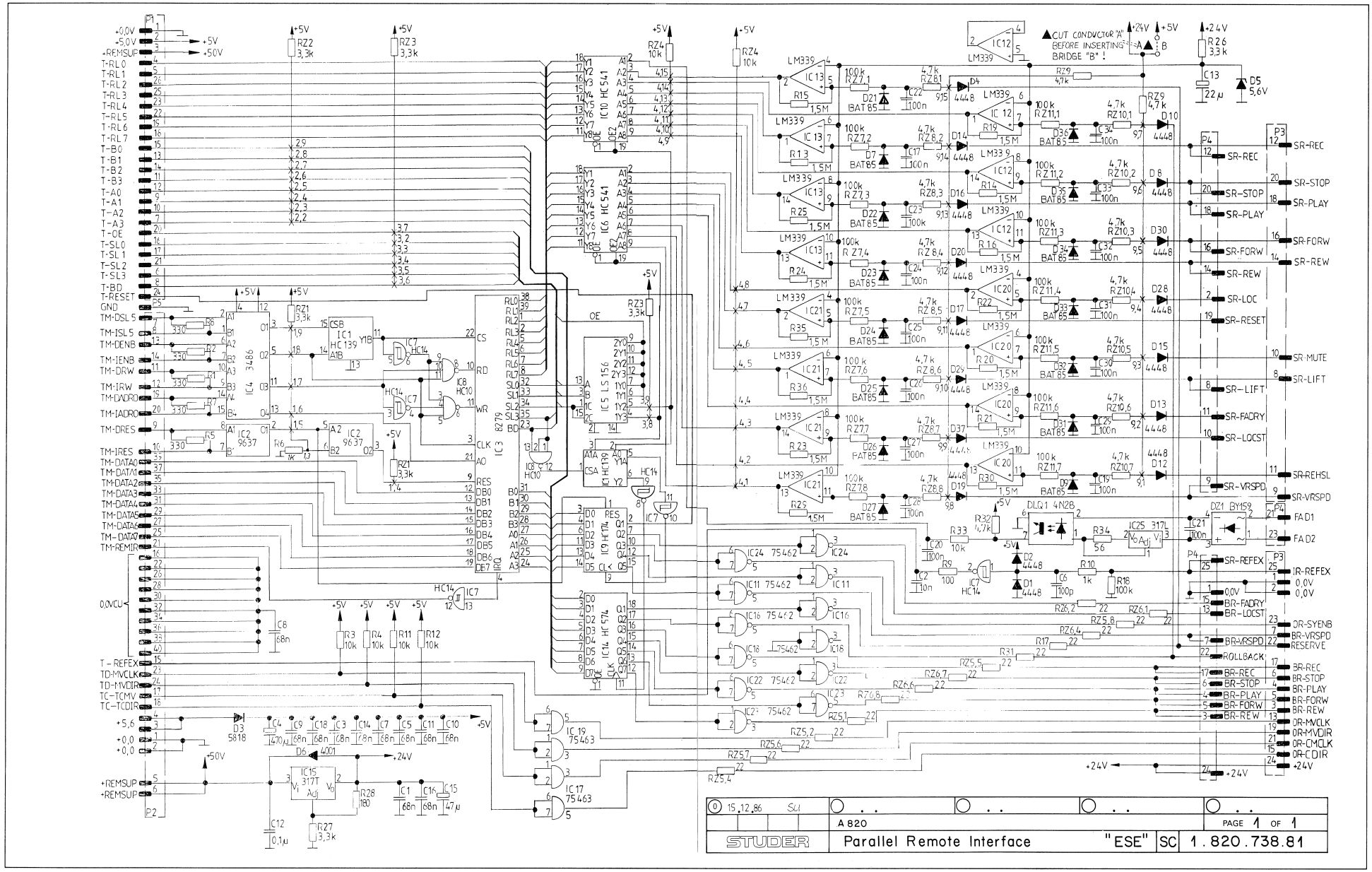

PARALLEL REMOTE INTERFACE 1.820.738.81

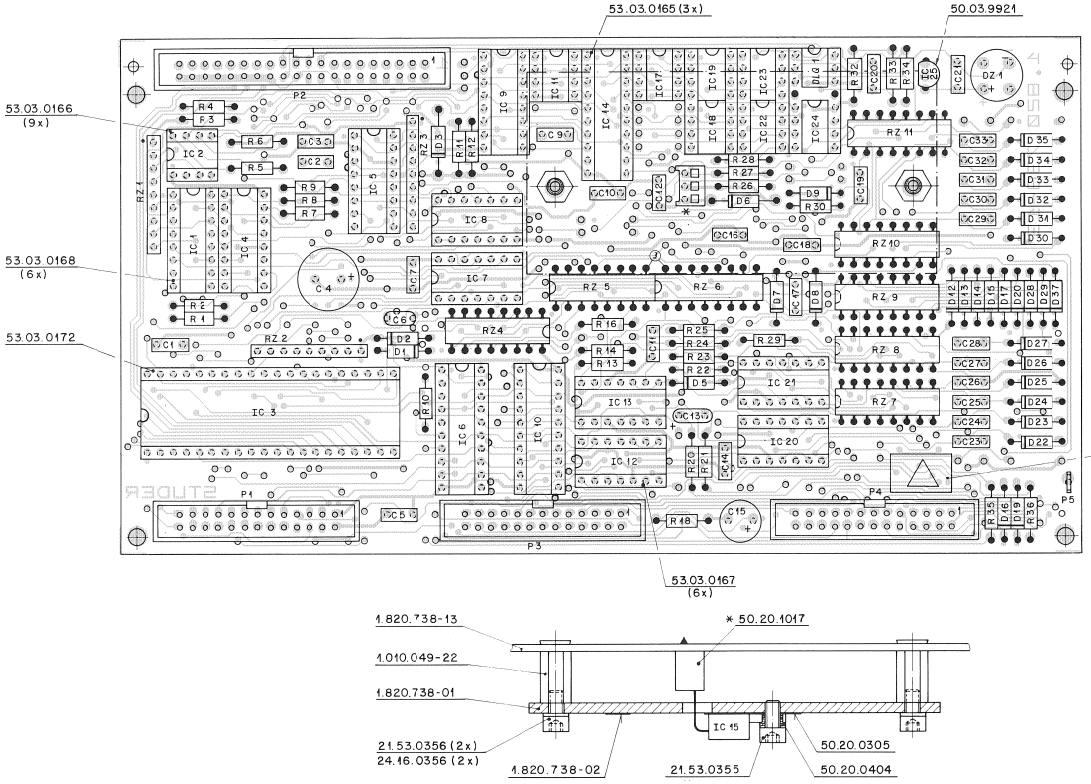

IND.	POS.NO.	PART NO.	VALUE	SPECIFICATIONS / EQUIVALENT	MANUF.
	IC...07	50.17.1014	74 HC 14	-- 74 HC 14 .	Mot.NS+Ph+RCA+TI+To
	IC...08	50.17.1010	74 HC 10	-- 74 HC 10 .	Mot.NS+Ph+RCA+SGS+TI+To
	IC...09	50.17.1174	74 HC 174	-- 74 HC 174 .	Mot.NS+Ph+RCA+SGS+TI+To
	IC...10	50.17.1141	74 HC 541	-- 74 HC 541 .	Mot.NS+Ph+RCA+SGS+TI+To
	IC...11	50.35.0227	SN 75462P		TI
	IC...12	50.11.0104	LM 339 AN	339 A+UA 339	Fc+Mot+NS+Tho
	IC...13	50.11.0104	LM 339 AN	339 A+UA 339	Fc+Mot+NS+Tho
	IC...14	50.17.1574	74 HC 574	-- 74 HC 574 .	Mot.NS+Ph+RCA+SGS+TI+To
	IC...15	50.10.0104	LM 317 T	LM 317 SP	NS+Mot+TI+Tho
	IC...17	50.35.0227	SN 75462P		TI
	IC...18	50.35.0227	SN 75462P		TI
	IC...19	50.05.0203	SN 75463P		TI
	IC...20	50.11.0104	LM 339 AN	339 A+UA 339	NS+Fc+Mot+Tho
	IC...21	50.11.0104	LM 339 AN	339 A+UA 339	NS+Fc+Mot+Tho
	IC...22	50.35.0227	SN 75462P		TI
	IC...23	50.35.0227	SN 75462P		TI
	IC...24	50.05.0227	SN 75462P		TI
	IC...25	50.10.0108	LM 317 LZ		NS+Mot
	P....01	54.14.2003		see note 2	
	P....02	54.14.2004		see note 1	
	P....03	54.14.2003		see note 2	
	P....04	54.14.2003		see note 2	
	R....01	57.11.4331	330 Ohm	2%	
	R....02	57.11.4331	330 Ohm	2%	
	R....03	57.11.4103	10 kOhm	2%	
	R....04	57.11.4103	10 kOhm	2%	
	R....05	57.11.4331	330 Ohm	2%	
	R....06	57.11.4102	1 kOhm	2%	
	R....07	57.11.4331	330 Ohm	2%	
	R....08	57.11.4331	330 Ohm	2%	
	R....09	57.11.4101	100 Ohm	2%	
	R....10	57.11.4102	1 kOhm	2%	
	R....11	57.11.4103	10 kOhm	2%	
	R....12	57.11.4103	10 kOhm	2%	
	R....13	57.11.5155	1.5 MOhm	5%	

IND.	POS.NO.	PART NO.	VALUE	SPECIFICATIONS / EQUIVALENT	MANUF.
	R....14	57.11.5155	1.5 MOhm	5%	
	R....15	57.11.5155	1.5 MOhm	5%	
	R....18	57.11.4104	100 kOhm	2%	
	R....20	57.11.5155	1.5 MOhm	5%	
	R....21	57.11.5155	1.5 MOhm	5%	
	R....22	57.11.5155	1.5 MOhm	5%	
	R....23	57.11.5155	1.5 MOhm	5%	
	R....24	57.11.5155	1.5 MOhm	5%	
	R....25	57.11.5155	1.5 MOhm	5%	
	R....26	57.11.4332	3.3 kOhm	1%	
	R....27	57.11.4332	3.3 kOhm	1%	
	R....28	57.11.3101	100 Ohm	1%	
	R....29	57.11.5155	1.5 MOhm	5%	
	R....31	57.11.5155	1.5 MOhm	5%	
	R....32	57.11.4472	4.7 kOhm	2%	
	R....33	57.11.4103	10 kOhm	2%	
	R....34	57.11.4960	96 Ohm	1%	
	R....35	57.11.5155	1.5 MOhm	5%	
	R....36	57.11.5155	1.5 MOhm	5%	
	RZ...01	57.88.4332		Network, 8 * 3.3 kOhm, 5%, single line	
	RZ...02	57.88.4332		Network, 8 * 3.3 kOhm, 5%, single line	
	RZ...03	57.88.4332		Network, 8 * 3.3 kOhm, 5%, single line	
	RZ...04	57.85.3103		Network,15 * 10 kOhm, 2%, DIL 16	
	RZ...05	57.88.3220		Network, 8 * 22 Ohm, 2%, DIL 16	
	RZ...06	57.88.3220		Network, 8 * 22 Ohm, 2%, DIL 16	
	RZ...07	57.88.3104		Network, 8 * 100 kOhm, 2%, DIL 16	
	RZ...08	57.88.3472		Network, 8 * 4.7 kOhm, 2%, DIL 16	
	RZ...09	57.85.3472		Network,15 * 4.7 kOhm, 2%, DIL 16	
	RZ...10	57.88.3472		Network, 8 * 4.7 kOhm, 2%, DIP 16	
	RZ...11	57.88.3104		Network, 8 * 100 kOhm, 2%, DIL 16	

IND.	POS.NO.	PART NO.	VALUE	SPECIFICATIONS / EQUIVALENT	MANUF.
	C....01	59.40.0583	68 nF	-10%, PETP	
	C....02	59.40.0103	10 nF	-10%, PETP	
	C....03	59.40.0583	68 nF	-10%, PETP	
	C....04	59.42.3471	470 uF	-20%, 10V, EL	
	C....05	59.40.0583	68 nF	-10%, PETP	
	C....06	59.45.4101	100 pF	5%, CER	
	C....07	59.40.0583	68 nF	-10%, PETP	
	C....09	59.40.0583	68 nF	-10%, PETP	
	C....10	59.40.0583	68 nF	-10%, PETP	
	C....11	59.40.0583	68 nF	-10%, PETP	
	C....12	59.40.0104	0.1 uF	-10%, PETP	
	C....13	59.42.1220	22 uF	-20%, 10V, SAL	
	C....14	59.40.0583	68 nF	-10%, PETP	
	C....15	59.41.6470	47 uF	-20%, 40V, EL	
	C....16	59.40.0583	68 nF	-10%, PETP	
	C....17	59.40.0104	0.1 uF	-10%, PETP	
	C....18	59.40.0583	68 nF	-10%, PETP	
	C....19	59.40.0104	0.1 uF	-10%, PETP	
	C....20	59.40.0104	0.1 uF	-10%, PETP	
	C....21	59.40.0104	0.1 uF	-10%, PETP	
	C....23	59.40.0104	0.1 uF	-10%, PETP	
	C....24	59.40.0104	0.1 uF	-10%, PETP	
	C....25	59.40.0104	0.1 uF	-10%, PETP	
	C....26	59.40.0104	0.1 uF	-10%, PETP	
	C....27	59.40.0104	0.1 uF	-10%, PETP	
	C....28	59.40.0104	0.1 uF	-10%, PETP	
	C....29	59.40.0104	0.1 uF	-10%, PETP	
	C....30	59.40.0104	0.1 uF	-10%, PETP	
	C....31	59.40.0104	0.1 uF	-10%, PETP	
	C....32	59.40.0104	0.1 uF	-10%, PETP	
	C....33	59.40.0104	0.1 uF	-10%, PETP	
	D....01	50.04.0125	1N 4448		Fc+ITT+Ph+Ses
	D....02	50.04.0125	1N 4448		Fc+ITT+Ph+Ses
	D....03	50.04.0112	1N 5818		Mot
	D....05	50.04.1108	5.6 V Z	BZX83 C 5V6, BZX55 C 5V6, ZPD 5.6	ITT+Ses
	D....06	50.04.0122	1N 4001	1N4004	Mot

IND.	POS.NO.	PART NO.	VALUE	SPECIFICATIONS / EQUIVALENT	MANUF.
	D....07	50.04.0127	BAT 85	BAS 40-02	Ph+Sie
	D....08	50.04.0125	1N 4448		Fc+ITT+Ph+Ses
	D....09	50.04.0127	BAT 85	BAS 40-02	Ph+Sie
	D....12	50.04.0125	1N 4448		Fc+ITT+Ph+Ses
	D....13	50.04.0125	1N 4448		Fc+ITT+Ph+Ses
	D....14	50.04.0125	1N 4448		Fc+ITT+Ph+Ses
	D....15	50.04.0125	1N 4448		Fc+ITT+Ph+Ses
	D....16	50.04.0125	1N 4448		Fc+ITT+Ph+Ses
	D....17	50.04.0125	1N 4448		Fc+ITT+Ph+Ses
	D....19	50.04.0125	1N 4448		Fc+ITT+Ph+Ses
	D....20	50.04.0125	1N 4448		Fc+ITT+Ph+Ses
	D....22	50.04.0127	BAT 85	BAS 40-02	Ph+Sie
	D....23	50.04.0127	BAT 85	BAS 40-02	Ph+Sie
	D....24	50.04.0127	BAT 85	BAS 40-02	Ph+Sie
	D....25	50.04.0127	BAT 85	BAS 40-02	Ph+Sie
	D....26	50.04.0127	BAT 85	BAS 40-02	Ph+Sie
	D....27	50.04.0127	BAT 85	BAS 40-02	Ph+Sie
	D....28	50.04.0125	1N 4448		Fc+ITT+Ph+Ses
	D....29	50.04.0125	1N 4448		Fc+ITT+Ph+Ses
	D....32	50.04.0125	1N 4448		Fc+ITT+Ph+Ses
	D....31	50.04.0127	BAT 85	BAS 40-02	Ph+Sie
	D....32	50.04.0127	BAT 85	BAS 40-02	Ph+Sie
	D....33	50.04.0127	BAT 85	BAS 40-02	Ph+Sie
	D....34	50.04.0127	BAT 85	BAS 40-02	Ph+Sie
	D....35	50.04.0127	BAT 85	BAS 40-02	Ph+Sie
	D....37	50.04.0125	1N 4448		Fc+ITT+Ph+Ses
	DL4...01	50.99.0125	4N 28	4N 26	Mot
	DZ...01	70.01.0223		B 250 C 800 S1	GI+Mot
	IC...01	50.17.1139	74 HC 139	-- 74 HC 139 .	Mot.NS+Ph+RCA+SGS+TI+To
	IC...02	50.15.0114	uA9637AIC	uA9637ACP	Fc+TI
	IC...03	50.15.0111	TP 8279-5	MSL 8279 P-5	It+Mi
	IC...04	50.15.0104	MC 3486 P	DS 3486 N	Mot+NS
	IC...05	50.17.0135	74 LS 136	SN 74 LS 136 N	Fc+NS+TI
	IC...06	50.17.1541	74 HC 541	-- 74 HC 541 .	Mot.NS+Ph+RCA+SGS+TI+To

IND.	POS.NO.	PART NO.	VALUE	SPECIFICATIONS / EQUIVALENT	MANUF.

Note 1 - Connector 43 contacts:
Yamaichi Nr. FAP-40-0824
Burndy Nr. BPH 9 B 40 800 GS

Note 2 - Connector 26 contacts:
Yamaichi Nr. FAP-26-0824
Burndy Nr. BPH 9 B 26 800 GS

El=Electrolytic, PSFP=Polyester, CER=Ceramic, SAL=Solid Aluminium

MANUFACTURERS: Fc=Fairchild, GI=General Instruments, It+Intel, Mi=Mitsubishi,
Mot=Motorola, NS=National Semiconductors, Ph=Philips,
RCA=RCA Corporation, SGS=SGS/Ates, Tho=Thomson,
TI=Texas Instruments, To=Toshiba.

DATE 86/12/15

PARALLEL REMOTE INTERFACE 1.820.738.82

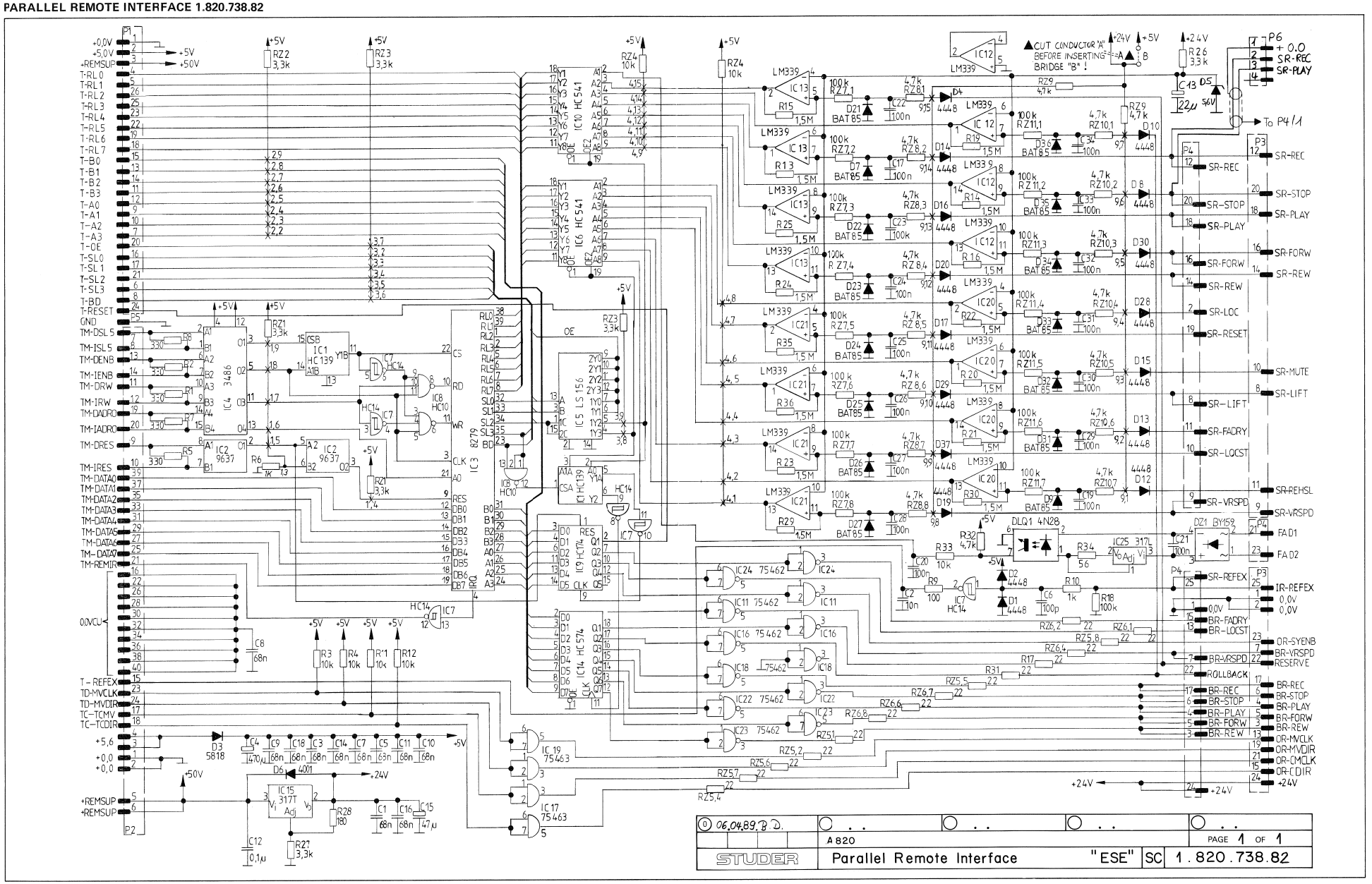

PARALLEL REMOTE INTERFACE 1.820.738.82

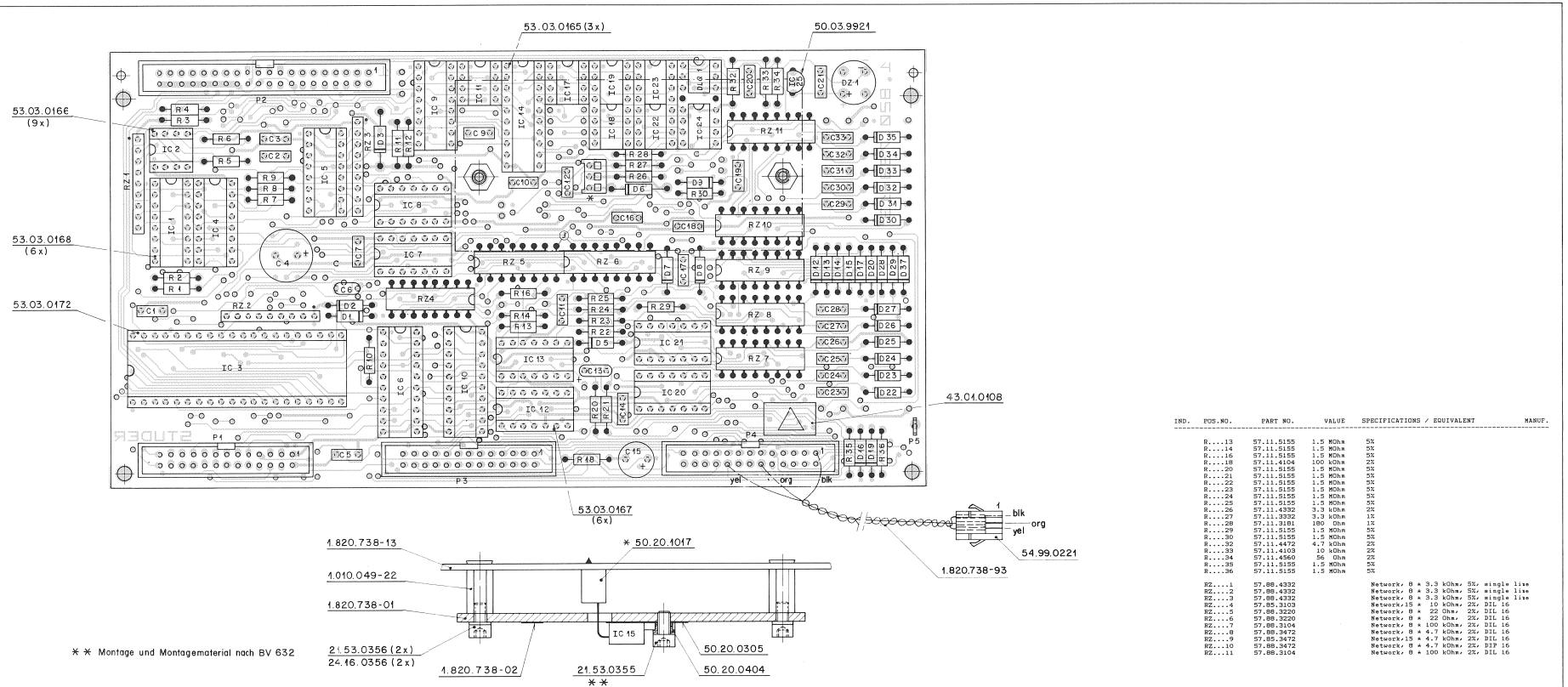

IND.	POS.NO.	PART NO.	VALUE	SPECIFICATIONS / EQUIVALENT	MANUF.
	R....13	57.11.5155	1.5 MOhm	5%	
	R....14	57.11.5155	1.5 MOhm	5%	
	R....16	57.11.5155	1.5 MOhm	5%	
	R....18	57.11.4104	100 kOhm	2%	
	R....20	57.11.5155	1.5 MOhm	5%	
	R....21	57.11.5155	1.5 MOhm	5%	
	R....22	57.11.5155	1.5 MOhm	5%	
	R....23	57.11.5155	1.5 MOhm	5%	
	R....24	57.11.5155	1.5 MOhm	5%	
	R....25	57.11.5155	1.5 MOhm	5%	
	R....26	57.11.4332	3.3 kOhm	2%	
	R....27	57.11.3332	3.3 kOhm	1%	
	R....28	57.11.3101	180 Ohm	1%	
	R....29	57.11.5155	1.5 MOhm	5%	
	R....30	57.11.5155	1.5 MOhm	5%	
	R....32	57.11.4472	4.7 kOhm	2%	
	R....33	57.11.4103	10 kOhm	2%	
	R....34	57.11.4560	56 Ohm	2%	
	R....35	57.11.5155	1.5 MOhm	5%	
	R....36	57.11.5155	1.5 MOhm	5%	
	RZ....1	57.88.4332		Network, 8 * 3.3 kOhm, 5%, single line	
	RZ....2	57.88.4332		Network, 8 * 3.3 kOhm, 5%, single line	
	RZ....3	57.88.4332		Network, 8 * 3.3 kOhm, 5%, single line	
	RZ....4	57.85.3103		Network,15 * 10 kOhm, 2%, DIL 16	
	RZ....5	57.88.3220		Network, 8 * 22 Ohm, 2%, DIL 16	
	RZ....6	57.88.3220		Network, 8 * 22 Ohm, 2%, DIL 16	
	RZ....7	57.88.3104		Network, 8 * 100 kOhm, 2%, DIL 16	
	RZ....8	57.88.3472		Network, 8 * 4.7 kOhm, 2%, DIL 16	
	RZ....9	57.85.3472		Network,15 * 4.7 kOhm, 2%, DIL 16	
	RZ....10	57.88.3472		Network, 8 * 4.7 kOhm, 2%, DIP 16	
	RZ....11	57.88.3104		Network, 8 * 100 kOhm, 2%, DIL 16	

IND.	POS.NO.	PART NO.	VALUE	SPECIFICATIONS / EQUIVALENT	MANUF.
	C....1	59.40.0683	68 uF	-10%, PETP	
	C....2	59.40.0103	10 nF	-10%, PETP	
	C....3	59.40.0683	68 nF	-10%, PETP	
	C....4	59.22.3471	470 uF	-20%, 10V, EL	
	C....5	59.40.0683	68 nF	-10%, PETP	
	C....6	59.45.4101	100 pF	5%, CER	
	C....7	59.40.0683	68 nF	-10%, PETP	
	C....9	59.40.0683	68 nF	-10%, PETP	
	C....10	59.40.0683	68 nF	-10%, PETP	
	C....11	59.40.0683	68 nF	-10%, PETP	
	C....12	59.40.0104	0.1 uF	-10%, PETP	
	C....13	59.42.1220	22 uF	-20%, 10V, SAL	
	C....14	59.40.0683	68 nF	-10%, PETP	
	C....15	59.41.6470	47 uF	-20%, 40V, EL	
	C....16	59.40.0683	68 nF	-10%, PETP	
	C....17	59.40.0104	0.1 uF	-10%, PETP	
	C....18	59.40.0683	68 nF	-10%, PETP	
	C....19	59.40.0104	0.1 uF	-10%, PETP	
	C....20	59.40.0104	0.1 uF	-10%, PETP	
	C....21	59.40.0104	0.1 uF	-10%, PETP	
	C....23	59.40.0104	0.1 uF	-10%, PETP	
	C....24	59.40.0104	0.1 uF	-10%, PETP	
	C....25	59.40.0104	0.1 uF	-10%, PETP	
	C....26	59.40.0104	0.1 uF	-10%, PETP	
	C....27	59.40.0104	0.1 uF	-10%, PETP	
	C....28	59.40.0104	0.1 uF	-10%, PETP	
	C....29	59.40.0104	0.1 uF	-10%, PETP	
	C....30	59.40.0104	0.1 uF	-10%, PETP	
	C....31	59.40.0104	0.1 uF	-10%, PETP	
	C....32	59.40.0104	0.1 uF	-10%, PETP	
	C....33	59.40.0104	0.1 uF	-10%, PETP	
	D....1	50.04.0125	1N 4448		Fc,ITT,Ph,Sie
	D....2	50.04.0125	1N 4448		Fc,ITT,Ph,Sie
	D....3	50.04.0512	1N 5818	1N 5819	Mot
	D....5	50.04.1108	5.6 V Z	BZX83 C 5V6, BZX55 C 5V6, ZPD 5.6	ITT,Sie
	D....6	50.04.0122	1N 4001	1N4004	Mot

IND.	POS.NO.	PART NO.	VALUE	SPECIFICATIONS / EQUIVALENT	MANUF.
	D....7	50.04.0127	BAT 85	BAS 40-02	Ph,Sie
	D....8	50.04.0125	1N 4448		Fc,ITT,Ph,Sie
	D....9	50.04.0127	BAT 85	BAS 40-02	Ph,Sie
	D....12	50.04.0125	1N 4448		Fc,ITT,Ph,Sie
	D....13	50.04.0125	1N 4448		Fc,ITT,Ph,Sie
	D....14	50.04.0125	1N 4448		Fc,ITT,Ph,Sie
	D....15	50.04.0125	1N 4448		Fc,ITT,Ph,Sie
	D....16	50.04.0125	1N 4448		Fc,ITT,Ph,Sie
	D....17	50.01.0125	1N 4448		Fc,ITT,Ph,Sie
	D....19	50.01.0125	1N 4448		Fc,ITT,Ph,Sie
	D....20	50.04.0125	1N 4448		Fc,ITT,Ph,Sie
	D....22	50.04.0127	BAT 85	BAS 40-02	Ph,Sie
	D....23	50.04.0127	BAT 85	BAS 40-02	Ph,Sie
	D....24	50.04.0127	BAT 85	BAS 40-02	Ph,Sie
	D....25	50.04.0127	BAT 85	BAS 40-02	Ph,Sie
	D....26	50.04.0127	BAT 85	BAS 40-02	Ph,Sie
	D....27	50.04.0127	BAT 85	BAS 40-02	Ph,Sie
	D....28	50.04.0125	1N 4448		Fc,ITT,Ph,Sie
	D....29	50.04.0125	1N 4448		Fc,ITT,Ph,Sie
	D....30	50.04.0125	1N 4448		Fc,ITT,Ph,Sie
	D....31	50.04.0127	BAT 85	BAS 40-02	Ph,Sie
	D....32	50.04.0127	BAT 85	BAS 40-02	Ph,Sie
	D....33	50.04.0127	BAT 85	BAS 40-02	Ph,Sie
	D....34	50.04.0127	BAT 85	BAS 40-02	Ph,Sie
	D....35	50.04.0127	BAT 85	BAS 40-02	Ph,Sie
	D....37	50.01.0125	1N 4448		Fc,ITT,Ph,Sie
	DLQ....1	50.99.0126	4N 28	4N 26	Mot
	DZ....1	70.01.0223		3 250 C 800 SI	GI,Mot
	IC....1	50.17.1139	74 HC 139	.. 74 HC 139 .	Mot,NS,Ph,RCA,SGS,TI,To
	IC....2	50.15.0114	uA9637ATC	uA9637ACP	Fc,TI
	IC....3	50.15.0111	IP 8279-5	45L 8279 P-5	It,Mi
	IC....4	50.15.0104	MC 3486 P	3S 3486 N	Mot,NS
	IC....5	50.05.0156	74 LS 156	SN 74 LS 156 N	Fc,NS,TI
	IC....6	50.17.1541	74 HC 541	.. 74 HC 541 .	Mot,NS,Ph,RCA,SGS,TI,To

IND.	POS.NO.	PART NO.	VALUE	SPECIFICATIONS / EQUIVALENT	MANUF.
	IC....7	50.17.1C14	74 HC 14	.. 74 HC 14 .	Mot,NS,Ph,RCA,TI,To
	IC....8	50.17.1C10	74 HC 10	.. 74 HC 10 .	Mot,NS,Ph,RCA,SGS,TI,To
	IC....9	50.17.1174	74 HC 174	.. 74 HC 174 .	Mot,NS,Ph,RCA,SGS,TI,To
	IC....10	50.17.1541	74 HC 541	.. 74 HC 541 .	Mot,NS,Ph,RCA,SGS,TI,To
	IC....11	50.05.0227	SN 75462P		TI
	IC....12	50.11.0104	LM 339 AN	339 A,uA 339	Fc,Mot,NS,Tho
	IC....13	50.11.0104	LM 339 AN	339 A,uA 339	Fc,Mot,NS,Tho
	IC....14	50.17.1574	74 HC 574	.. 74 HC 574 .	Mot,NS,Ph,RCA,SGS,TI,To
	IC....15	50.10.0104	LM 317 T	LM 317 SP	NS,Mot,TI,Tho
	IC....17	50.05.0203	SN 75463P		TI
	IC....18	50.05.0227	SN 75462P		TI
	IC....19	50.05.0203	SN 75463P		TI
	IC....20	50.11.0104	LM 339 AN	339 A,uA 339	NS,Fc,Mot,Tho
	IC....21	50.11.0104	LM 339 AN	339 A,uA 339	NS,Fc,Mot,Tho
	IC....22	50.05.0227	SN 75462P		TI
	IC....23	50.05.0227	SN 75462P		TI
	IC....24	50.05.0227	SN 75462P		TI
	IC....25	50.10.0108	LM 317 LZ		NS,Mot
	P....1	54.14.2003	Connector	26 contacts, flat cable	
	P....2	54.14.2004	Connector	40 contacts, flat cable	
	P....3	54.14.2003	Connector	26 contacts, flat cable	
	P....4	54.14.2003	Connector	26 contacts, flat cable	
	P....5	54.02.0220	Connector	1 contact , 2.540.0. flat	
	R....1	57.11.4331	330 Ohm	2%	
	R....2	57.11.4331	330 Ohm	2%	
	R....3	57.11.4103	10 kOhm	2%	
	R....4	57.11.4103	10 kOhm	2%	
	R....5	57.11.4331	330 Ohm	2%	
	R....6	57.11.4102	1 kOhm	2%	
	R....7	57.11.4331	330 Ohm	2%	
	R....8	57.11.4331	330 Ohm	2%	
	R....9	57.11.4101	100 Ohm	2%	
	R....10	57.11.4102	1 kOhm	2%	
	R....11	57.11.4103	10 kOhm	2%	
	R....12	57.11.4103	10 kOhm	2%	

IND.	POS.NO.	PART NO.	VALUE	SPECIFICATIONS / EQUIVALENT	MANUF.

El=Electrolytic, PETP=Polyester, CER=Ceramic, SAL=Solid Aluminium

MANUFACTURERS: Fc=Fairchild, GI=General Instruments, It=Intel, Mi=Mitsubishi, Mot=Motorola, NS=National Semiconductors, Ph=Philips, RCA=RCA Corporation, SGS=SGS/Ates, Tho=Thomson, TI=Texas Instruments, To=Toshiba.

ORIG 89/04/06

PARALLEL REMOTE INTERFACE 1.820.738.83

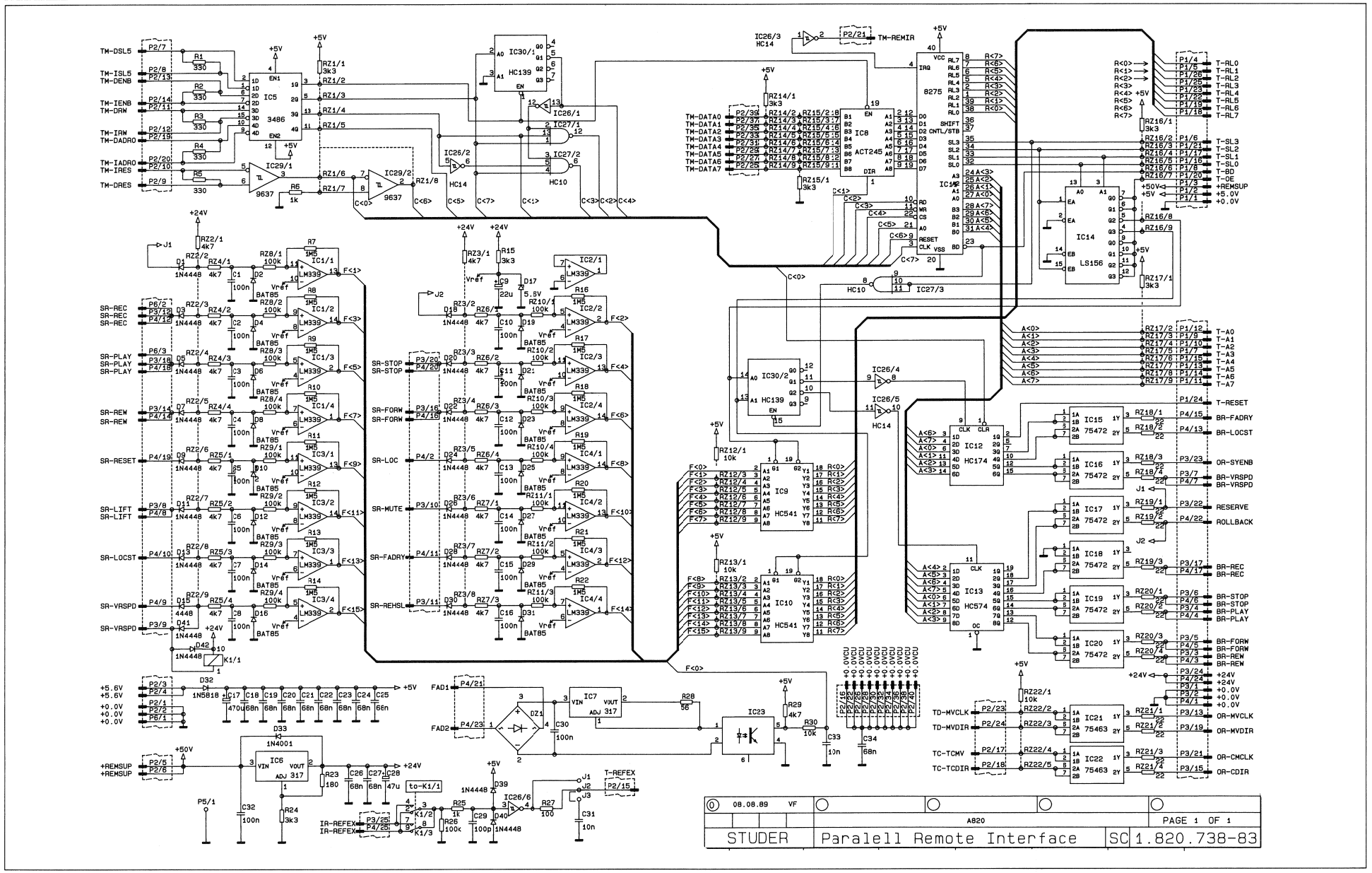

PARALLEL REMOTE INTERFACE 1.820.738.83

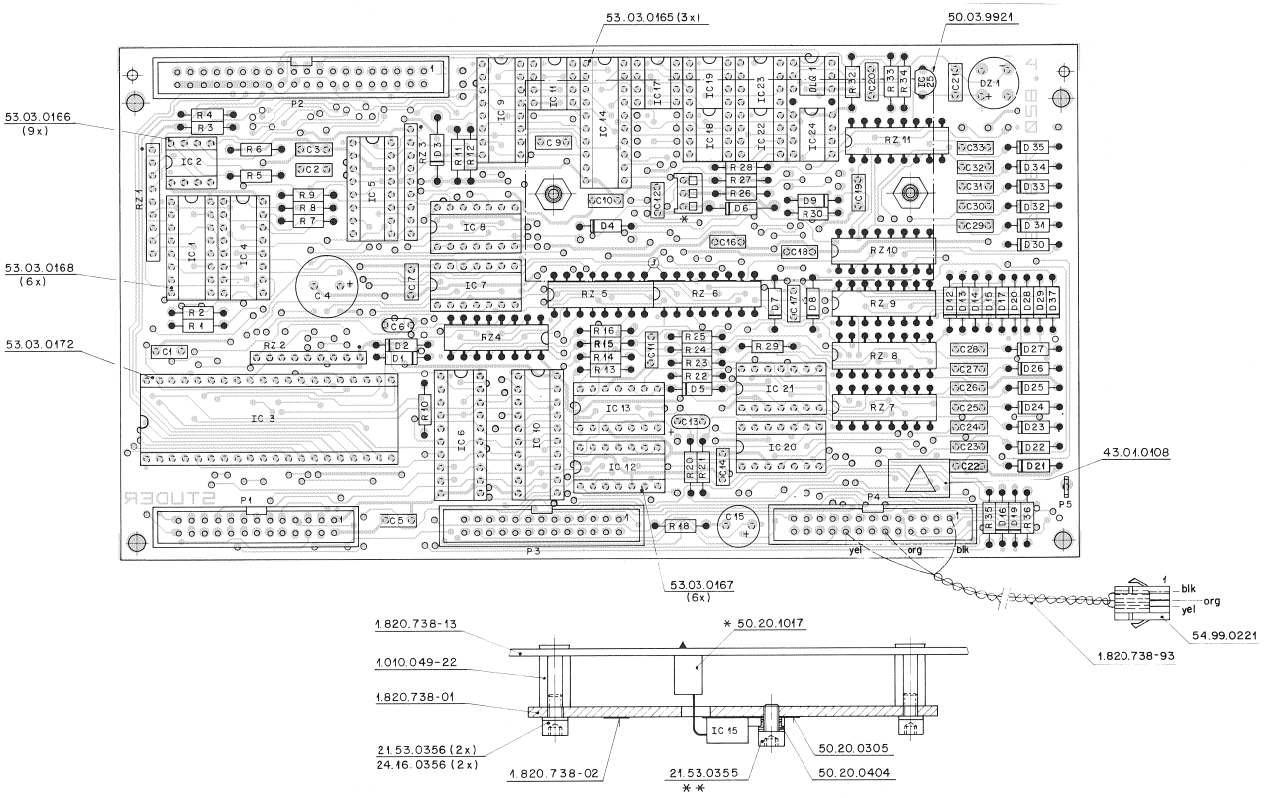

IND.	POS.NO.	PART NO.	VALUE	SPECIFICATIONS / EQUIVALENT	MANUF.
	IC....4	50.15.0104	MC 3486 P	DS 3486 N	Fe/NS
	IC....5	50.06.0156	74 LS 156	SN 74 LS 156 N	Fe,NS,TI
	IC....6	50.17.1541	74 HC 541	.. 74 HC 541 .	Mot,NS,Ph,RCA,SGS,TI,To
	IC....7	50.17.1014	74 HC 14	.. 74 HC 14 .	Mot,NS,Ph,RCA,TI,To
	IC....8	50.17.1010	74 HC 10	.. 74 HC 10 .	Mot,NS,Ph,RCA,SGS,TI,To
	IC....9	50.17.1174	74 HC 174	.. 74 HC 174 .	Mot,NS,Ph,RCA,SGS,TI,To
	IC...10	50.17.1541	74 HC 541	.. 74 HC 541 .	Mot,NS,Ph,RCA,SGS,TI,To
	IC...11	50.05.0227	SN 75462P		TI
	IC...12	50.11.0104	LM 339 AN	339 A/uA 339	Fe,Mot,NS,Tho
	IC...13	50.11.0104	LM 339 AN	339 A/uA 339	Fe,Mot,NS,Tho
	IC...14	50.17.1574	74 HC 574	.. 74 HC 574 .	Mot,NS,Ph,RCA,SGS,TI,To
	IC...15	50.10.0104	LM 317 T	LM 317 SP	NS,Mot,TI,Tho
	IC...17	50.05.0203	SN 75463P		TI
	IC...18	50.05.0227	SN 75462P		TI
	IC...19	50.05.0203	SN 75463P		TI
	IC...20	50.11.0104	LM 339 AN	339 A/uA 339	NS,Fe,Mot,Tho
	IC...21	50.11.0104	LM 339 AN	339 A/uA 339	NS,Fe,Mot,Tho
	IC...22	50.05.0227	SN 75462P		TI
	IC...23	50.05.0227	SN 75462P		TI
	IC...24	50.05.0227	SN 75462P		TI
	IC...25	50.10.0108	LM 317 LZ		NS,Mot
	P....1	54.14.2003	Connector	26 contacts, flat cable	
	P....2	54.14.2004	Connector	40 contacts, flat cable	
	P....3	54.14.2003	Connector	26 contacts, flat cable	
	P....4	54.14.2003	Connector	26 contacts, flat cable	
	P....5	54.02.0320	Connector	1 contact , 2.540.8, flat	
	R....1	57.11.4331	330 Ohm	2%	
	R....2	57.11.4331	330 Ohm	2%	
	R....3	57.11.4103	10 kOhm	2%	
	R....4	57.11.4103	10 kOhm	2%	
	R....5	57.11.4331	330 Ohm	2%	
	R....6	57.11.4102	1 kOhm	2%	
	R....7	57.11.4331	330 Ohm	2%	
	R....8	57.11.4331	330 Ohm	2%	
	R....9	57.11.4101	100 Ohm	2%	

IND.	POS.NO.	PART NO.	VALUE	SPECIFICATIONS / EQUIVALENT	MANUF.
	R....10	57.11.4102	1 kOhm	2%	
	R....11	57.11.4103	10 kOhm	2%	
	R....12	57.11.4103	10 kOhm	2%	
	R....13	57.11.5155	1.5 MOhm	5%	
	R....14	57.11.5155	1.5 MOhm	5%	
	R....15	57.11.5155	1.5 MOhm	5%	
	R....16	57.11.5155	1.5 MOhm	5%	
	R....18	57.11.4104	100 kOhm	2%	
	R....20	57.11.5155	1.5 MOhm	5%	
	R....21	57.11.5155	1.5 MOhm	5%	
	R....22	57.11.5155	1.5 MOhm	5%	
	R....23	57.11.5155	1.5 MOhm	5%	
	R....24	57.11.5155	1.5 MOhm	5%	
	R....25	57.11.5155	1.5 MOhm	5%	
	R....26	57.11.4332	3.3 kOhm	2%	
	R....27	57.11.3332	3.3 kOhm	1%	
	R....28	57.11.3181	180 Ohm	1%	
	R....29	57.11.5155	1.5 MOhm	5%	
	R....30	57.11.5155	1.5 MOhm	5%	
	R....32	57.11.4472	4.7 kOhm	2%	
	R....33	57.11.4103	10 kOhm	2%	
	R....34	57.11.4560	56 Ohm	2%	
	R....35	57.11.5155	1.5 MOhm	5%	
	R....36	57.11.5155	1.5 MOhm	5%	
	RZ....1	57.88.4332		Network, 8 * 3.3 kOhm, 5%, single line	
	RZ....2	57.88.4332		Network, 8 * 3.3 kOhm, 5%, single line	
	RZ....3	57.88.4332		Network, 8 * 3.3 kOhm, 5%, single line	
	RZ....4	57.85.3103		Network,15 * 10 kOhm, 2%, DIL 16	
	RZ....5	57.88.3220		Network, 8 * 22 Ohm, 2%, DIL 16	
	RZ....6	57.88.3220		Network, 8 * 22 Ohm, 2%, DIL 16	
	RZ....7	57.88.3104		Network, 8 * 100 kOhm, 2%, DIL 16	
	RZ....8	57.88.3472		Network, 8 * 4.7 kOhm, 2%, DIL 16	
	RZ....9	57.85.3472		Network,15 * 4.7 kOhm, 2%, DIL 16	
	RZ...10	57.88.3472		Network, 8 * 4.7 kOhm, 2%, DIP 16	
	RZ...11	57.88.3104		Network, 8 * 100 kOhm, 2%, DIL 16	

IND.	POS.NO.	PART NO.	VALUE	SPECIFICATIONS / EQUIVALENT	MANUF.
	C....1	59.40.0683	68 uF	-10%, PETP	
	C....2	59.40.0103	10 nF	-10%, PETP	
	C....3	59.40.0683	68 nF	-10%, PETP	
	C....4	59.22.3471	470 uF	-20%, 10V, EL	
	C....5	59.40.0683	68 nF	-10%, PETP	
	C....6	59.45.4101	100 pF	5%, CER	
	C....7	59.40.0683	68 nF	-10%, PETP	
	C....9	59.40.0683	68 nF	-10%, PETP	
	C...10	59.40.0683	68 nF	-10%, PETP	
	C...11	59.40.0683	68 nF	-10%, PETP	
	C...12	59.40.0104	0.1 uF	-10%, PETP	
	C...13	59.42.1220	22 uF	-20%, 10V, SAL	
	C...14	59.40.0683	68 nF	-10%, PETP	
	C...15	59.41.6470	47 uF	-20%, 40V, EL	
	C...16	59.40.0683	68 nF	-10%, PETP	
	C...17	59.40.0104	0.1 uF	-10%, PETP	
	C...18	59.40.0683	68 nF	-10%, PETP	
	C...19	59.40.0104	0.1 uF	-10%, PETP	
	C...20	59.40.0104	0.1 uF	-10%, PETP	
	C...21	59.40.0104	0.1 uF	-10%, PETP	
	C...22	59.40.0104	0.1 uF	-10%, PETP	
	C...23	59.40.0104	0.1 uF	-10%, PETP	
	C...24	59.40.0104	0.1 uF	-10%, PETP	
	C...25	59.40.0104	0.1 uF	-10%, PETP	
	C...26	59.40.0104	0.1 uF	-10%, PETP	
	C...27	59.40.0104	0.1 uF	-10%, PETP	
	C...28	59.40.0104	0.1 uF	-10%, PETP	
	C...29	59.40.0104	0.1 uF	-10%, PETP	
	C...30	59.40.0104	0.1 uF	-10%, PETP	
	C...31	59.40.0104	0.1 uF	-10%, PETP	
	C...32	59.40.0104	0.1 uF	-10%, PETP	
	C...33	59.40.0104	0.1 uF	-10%, PETP	
	D....1	50.04.0125	1N 4448		Fe/ITT,Ph,Sem
	D....2	50.04.0125	1N 4448		Fe/ITT,Ph,Sem
	D....3	50.04.0512	1N 5818	1N 5819	Mot
	D....4	50.04.0125	1N 4448		Fe/ITT,Ph,Sem

IND.	POS.NO.	PART NO.	VALUE	SPECIFICATIONS / EQUIVALENT	MANUF.
	D....5	50.04.1108	5.6 V Z	BZX83 C 5V6, BZX55 C 5V6, ZPD 5.6	ITT,Sem
	D....6	50.04.0122	1N 4001	1N4004	Mot
	D....7	50.04.0127	BAT 85	BAS 40-02	Ph,Sie
	D....8	50.04.0125	1N 4448		Fe,ITT,Ph,Sem
	D....9	50.04.0127	BAT 85	BAS 40-02	Ph,Sie
	D...12	50.04.0125	1N 4448		Fe,ITT,Ph,Sem
	D...13	50.04.0125	1N 4448		Fe,ITT,Ph,Sem
	D...14	50.04.0125	1N 4448		Fe,ITT,Ph,Sem
	D...15	50.04.0125	1N 4448		Fe,ITT,Ph,Sem
	D...16	50.04.0125	1N 4448		Fe,ITT,Ph,Sem
	D...17	50.04.0125	1N 4448		Fe,ITT,Ph,Sem
	D...19	50.04.0125	1N 4448		Fe,ITT,Ph,Sem
	D...20	50.04.0125	1N 4448		Fe,ITT,Ph,Sem
	D...21	50.04.0127	BAT 85	BAS 40-02	Ph,Sie
	D...22	50.04.0127	BAT 85	BAS 40-02	Ph,Sie
	D...23	50.04.0127	BAT 85	BAS 40-02	Ph,Sie
	D...24	50.04.0127	BAT 85	BAS 40-02	Ph,Sie
	D...25	50.04.0127	BAT 85	BAS 40-02	Ph,Sie
	D...26	50.04.0127	BAT 85	BAS 40-02	Ph,Sie
	D...27	50.04.0127	BAT 85	BAS 40-02	Ph,Sie
	D...28	50.04.0125	1N 4448		Fe,ITT,Ph,Sem
	D...29	50.04.0125	1N 4448		Fe,ITT,Ph,Sem
	D...30	50.04.0125	1N 4448		Fe,ITT,Ph,Sem
	D...31	50.04.0127	BAT 85	BAS 40-02	Ph,Sie
	D...32	50.04.0127	BAT 85	BAS 40-02	Ph,Sie
	D...33	50.04.0127	BAT 85	BAS 40-02	Ph,Sie
	D...34	50.04.0127	BAT 85	BAS 40-02	Ph,Sie
	D...35	50.04.0127	BAT 85	BAS 40-02	Ph,Sie
	D...37	50.04.0125	1N 4448		Fe,ITT,Ph,Sem
	DLG...1	50.99.0126	4N 28	4N 26	Mot
	DZ....1	70.01.0223		B 250 C 800 SI	GI,Mot
	IC....1	50.17.1139	74 HC 139	.. 74 HC 139 .	Mot,NS,Ph,RCA,SGS,TI,To
	IC....2	50.15.0114	uA9637AIC	uA9637ACP	Fe,TI
	IC....3	50.16.0111	IP 8279-5	MSL 8279 P-5	It,Mi

E1=Electrolytic, PETP=Polyester, CER=Ceramic, SAL=Solid Aluminium

MANUFACTURERS: Fe=Fairchild, GI=General Instruments, It=Intel, Mi=Mitsubishi, Mo=Motorola, NS=National Semiconductors, Ph=Philips, RCA=RCA Corporation, SGS=SGS/Ates, Tho=Thomson, TI=Texas Instruments, To=Toshiba.

ORIG 89/12/12

BLOCK DIAGRAM
SERIAL REMOTE INTERFACE 1.820.729

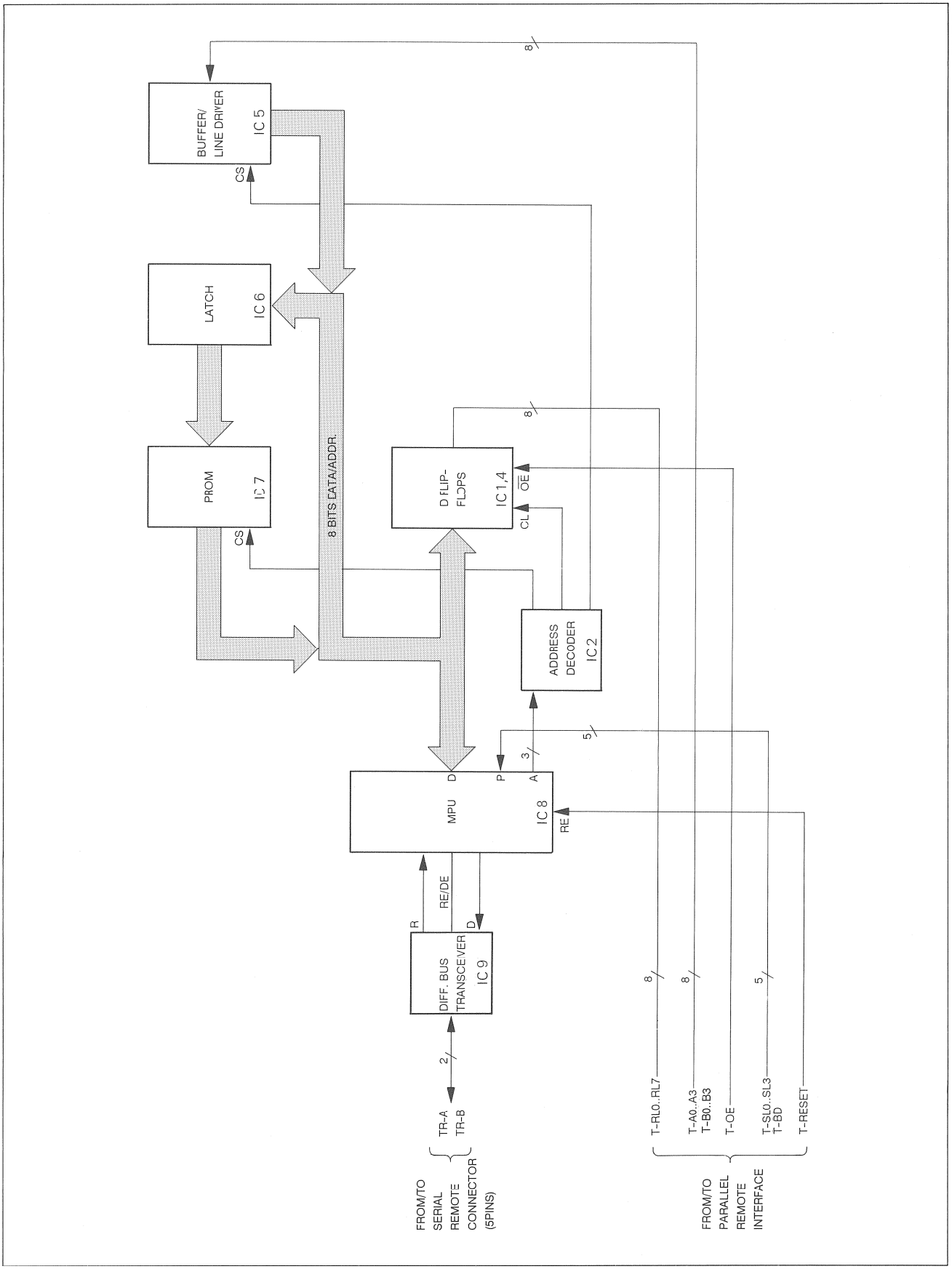

SERIAL REMOTE INTERFACE 1.820.729.24

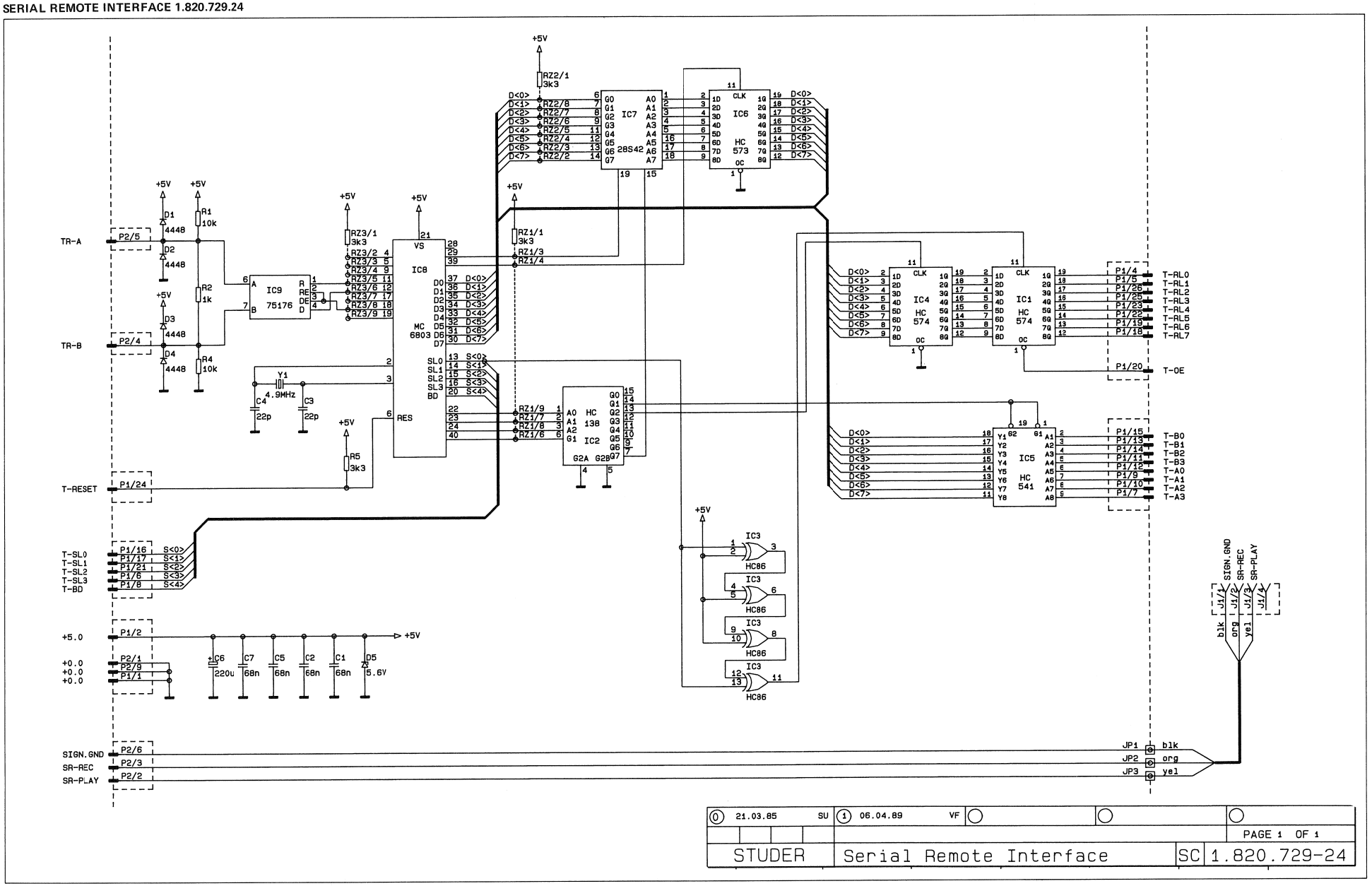

SERIAL REMOTE INTERFACE 1.820.729.24

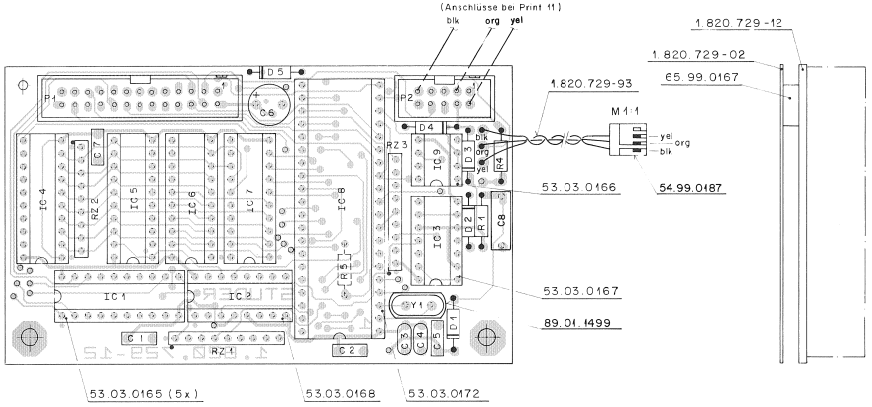

IND.	POS.NO.	PART NO.	VALUE	SPECIFICATIONS / EQUIVALENT	MANUF.
(20)	C....1	59.40.0683	68nF	10%, PETP	
(20)	C....2	59.40.0683	68nF	10%, PETP	
(20)	C....3	59.45.2220	22pF	5%, CER	
(21)	C....3	59.34.2330	33pF	5%, CER	
(20)	C....4	59.45.2220	22pF	5%, CER	
(21)	C....4	59.34.2330	33pF	5%, CER	
(20)	C....5	59.40.0683	68nF	10%, PETP	
(20)	C....6	59.22.3221	220uF	20%, 10V EL	
(20)	C....7	59.40.0683	68nF	10%, PETP	
(25)	C....8	59.03.2472	4.7nF	10%, PETP	
(20)	D....1	50.04.0125	1N4448		?c,ITT,See,Ph
(20)	D....2	50.04.0125	1N4448		?c,ITT,See,Ph
(20)	D....3	50.04.0125	1N4448		?c,ITT,See,Ph
(20)	D....4	50.04.0125	1N4448		?c,ITT,See,Ph
(20)	D....5	50.04.1108	5.6V Z	BZX83 C 5V6, BZX55 C 5V6, ZPD5.6	ITT,See
(20)	IC....1	50.17.1574	74HC 574	... 74 HC 574	Ph,Mot-NS,RCA-To,TI
(20)	IC....2	50.17.1138	74HC 138	... 74 HC 138	Mot,NS,?h,RCA-SGS,TI
(20)	IC....3	50.17.1086	74HC 86	... 74 HC 86	Mot,NS,?h,RCA-SGS,TI
(20)	IC....4	50.17.1574	74HC 574	... 74 HC 574	Ph,Mot-NS,RCA,To,TI
(20)	IC....5	50.17.1541	74HC 541	... 74 HC 541	Ph,Mot-NS,RCA,To,TI
(20)	IC....6	50.17.1573	74HC 573	... 74 HC 573	Ph,Mot,RCA,To,TI,SGS
(00)	IC....7	50.14.0120	TBP28S42N		TI
(20)	IC....7	1.820.999.20		Software 13/05	St
(21)	IC....7	1.820.999.21		Software 50/06	St
(22)	IC....7	1.820.999.22		Software 29/07	St
(23)	IC....7	1.820.999.23		Software 41/07	St
(20)	IC....8	50.16.0107	6803 P-1	HD 6803P-1	Mot,Hi
(20)	IC....9	50.15.0115	SN75176 AP	DS 3695 N	TI,NS
(20)	P....1	54.14.2003	connector	26 contacts, flat cable	
(20)	P....2	54.14.2001	connector	10 contacts, flat cable	
(20)	R....1	57.11.3103	10 kOhm	2%	
(20)	R....2	57.11.3102	1 kOhm	2%	
(25)	R....2		not used	replaced by C8	

IND.	POS.NO.	PART NO.	VALUE	SPECIFICATIONS / EQUIVILENT	MANUF.
(20)	R....4	57.1..3103	10 kOhm	2%	
(20)	R....5	57.1..3332	3.3 kOhm	2%	
(20)	RZ....1	57.88.4332	8*3.3kOhm	Network, 8 * 3.3 kOhm, 5%, single line	
(20)	RZ....2	57.88.4332	8*3.3kOhm	Network, 8 * 3.3 kOhm, 5%, single line	
(20)	RZ....3	57.88.4332	8*3.3kOhm	Network, 8 * 3.3 kOhm, 5%, single line	
(20)	Y.....1	89.0..0553		4.9152 MHz, TD 18	
(21)	Y.....1	89.0..0560		4.9152 MHz, +- 100 ppm	

(21) 86.12.08 Improved quarz accuracy, extension of autolocater key board.

(22) 87.07.13 Software 29/87 (wrong stroke).

(23) 87.10.08 Software 41/87.

(24) 89.04.06 Additional connections to Parallel Remote, SR-PLAY, SR-REC for improved progress time.

(25) 89.09.25 Improved noise suppression on differential line.

El=Electrolytic, PETP=Polyester, CER=Ceramic, SAL=Solid Aluminium

MANUFACTURERS: Fe=Ferranti, Hi=Hitachi, Is=Intersil, Mot=Motorola, NS=National Semiconductors, Ph=Philips, RCA=RCA Corporation, SGS=SGS/Ates, St=Studer TI=Texas Instruments, To=Toshiba

ORIG 85/03/21 (20) 85/03/21 (21) 86/12/08 (22) 87/07/13 (23) 87/10/08
(24) 89/04/06 (25) 89/09/25

SERIAL REMOTE INTERFACE 1.820.729.25

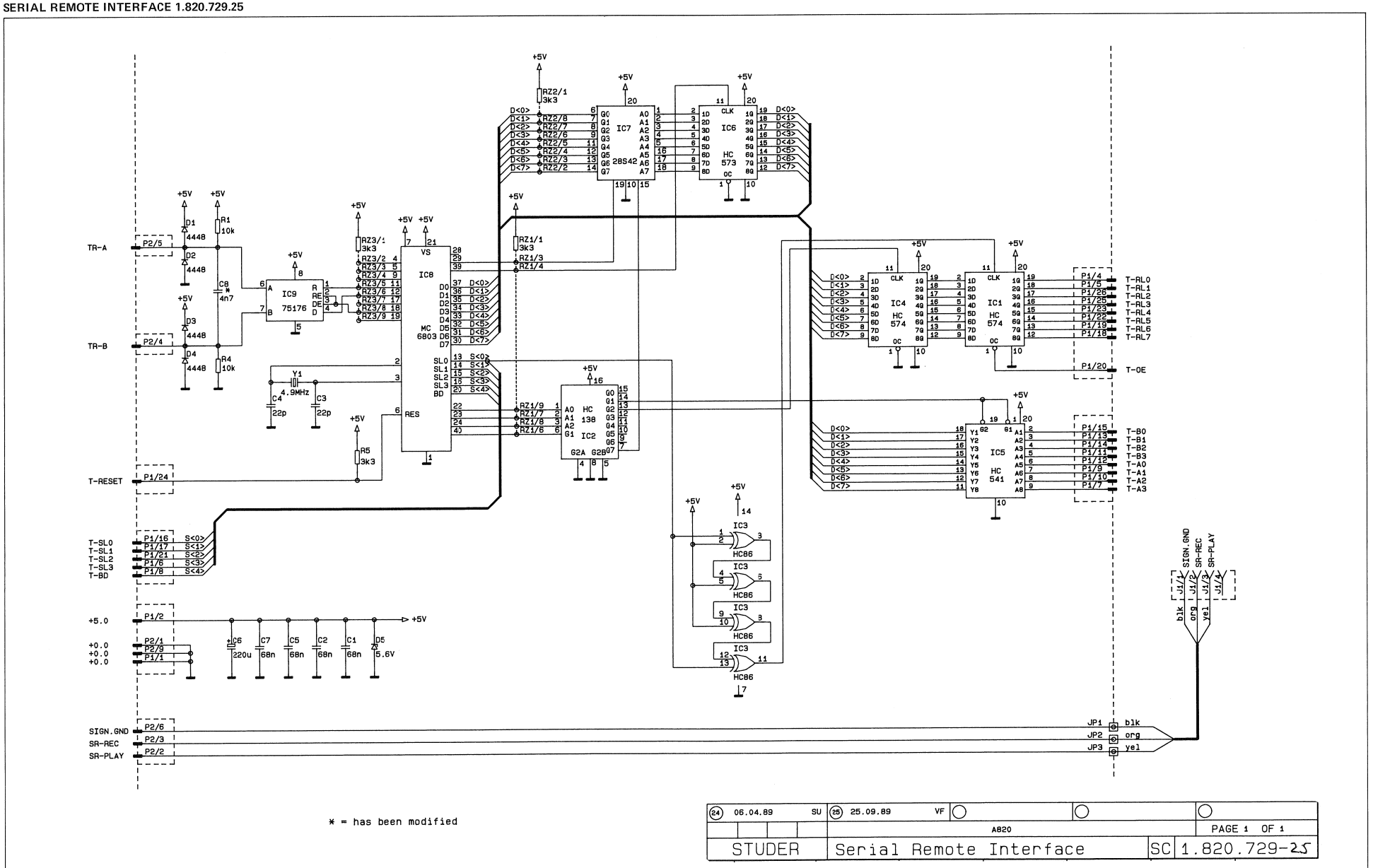

SERIAL REMOTE INTERFACE 1.820.729.25

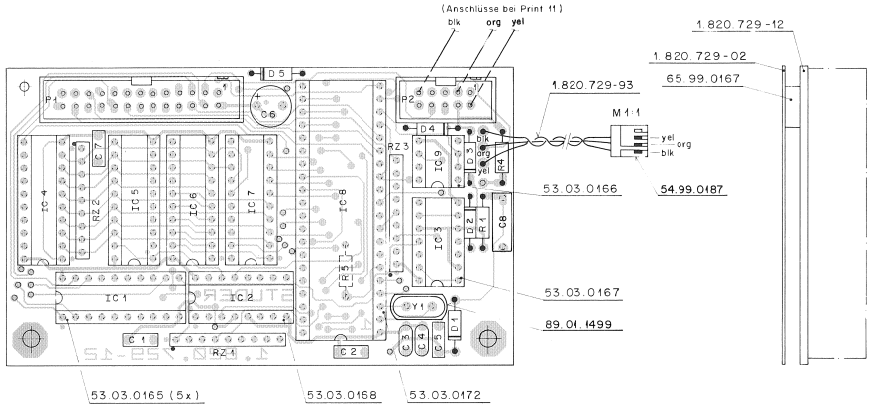

IND.	POS.NO.	PART NO.	VALUE	SPECIFICATIONS / EQUIVALENT	MANUF.
(20)	C.....1	59.40.0683	68nF	10%, PETP	
(20)	C.....2	59.40.0683	68nF	10%, PETP	
(20)	C.....3	59.45.2220	22pF	5%, CER	
(21)	C.....3	59.34.2330	33pF	5%, CER	
(20)	C.....4	59.45.2220	22pF	5%, CER	
(21)	C.....4	59.34.2330	33pF	5%, CER	
(20)	C.....5	59.40.0683	68nF	10%, PETP	
(20)	C.....6	59.22.3221	220uF	20%, 10V EL	
(20)	C.....7	59.40.0683	68nF	10%, PETP	
(25)	C.....8	59.03.2472	4.7nF	10%, PETP	
(20)	D.....1	50.04.0125	1N4448		Fc/ITT/Sem/Ph
(20)	D.....2	50.04.0125	1N4448		Fc/ITT/Sem/Ph
(20)	D.....3	50.04.0125	1N4448		Fc/ITT/Sem/Ph
(20)	D.....4	50.04.0125	1N4448		Fc/ITT/Sem/Ph
(20)	D.....5	50.04.1108	5.6V Z	BZX83 C 5V6, BZX55 C 5V6, ZPD5.6	ITT/Sem
(20)	IC....1	50.17.1574	74HC 574	... 74 HC 574	Ph/Mot/NS/RCA/To/TI
(20)	IC....2	50.17.1138	74HC 138	... 74 HC 138	Mot/NS-Ph/RCA/SGS/TI
(20)	IC....3	50.17.1086	74HC 86	... 74 HC 86	Mot/NS-Ph/RCA/SGS/TI
(20)	IC....4	50.17.1574	74HC 574	... 74 HC 574	Ph/Mot/NS/RCA/To/TI
(20)	IC....5	50.17.1541	74HC 541	... 74 HC 541	Ph/Mot/NS/RCA/To/TI
(20)	IC....6	50.17.1573	74HC 573	... 74 HC 573	Ph/Mot-RCA-To/TI/SGS
(00)	IC....7	50.14.0120	TBP28S42N		TI
(20)	IC....7	1.820.999.20		Software 13/85	St
(21)	IC....7	1.820.999.21		Software 50/86	St
(22)	IC....7	1.820.999.22		Software 29/87	St
(23)	IC....7	1.820.999.23		Software 41/87	St
(20)	IC....8	50.16.0107	MC6803 P-1	HD 6803P-1	Mot-Hi
(20)	IC....9	50.15.0115	SN75176 AP	DS 3695 N	TI,NS
(20)	P.....1	54.14.2003	connector	26 contacts, flat cable	
(20)	P.....2	54.14.2001	connector	10 contacts, flat cable	
(20)	R.....1	57.11.3103	10 kOhm	2%	
(20)	R.....2	57.11.3102	1 kOhm	2%	
(25)	R.....2		not used	replaced by C8	

IND.	POS.NO.	PART NO.	VALUE	SPECIFICATIONS / EQUIVALENT	MANUF.
(20)	R.....4	57.11.3103	10 kOhm	2%	
(20)	R.....5	57.11.3332	3.3 kOhm	2%	
(20)	RZ....1	57.08.4332	8*3.3kOhm	Network, 8 * 3.3 kOhm, 5%, single line	
(20)	RZ....2	57.08.4332	8*3.3kOhm	Network, 8 * 3.3 kOhm, 5%, single line	
(20)	RZ....3	57.08.4332	8*3.3kOhm	Network, 8 * 3.3 kOhm, 5%, single line	
(20)	Y.....1	89.01.0553		4.9152 MHz, TD 18	
(21)	Y.....1	89.01.0560		4.9152 MHz, +- 100 ppm	

(21) 86.12.08 Improved quarz accuracy, extension of autolocater key board.

(22) 87.07.13 Software 29/87 (wrong stroke).

(23) 87.10.08 Software 41/87.

(24) 89.04.06 Additional connections to Parallel Remote, SR-PLAY, SR-REC for improved progress time.

(25) 89.09.25 Improved noise suppression on differential line.

E.=Electrolytic, PETP=Polyester, CER=Ceramic, SAL=Solid Aluminium

MANUFACTURERS: Fa=Fasrasti, Hi=Hitachi, Is=Intersil, Mot=Motorola,
NS=National Semiconductors, Ph=Philips,
RCA=RCA Corporation, SGS=SGS/Ates, St=Studer
TI=Texas Instruments, To=Toshiba

OBIG 85/03/21 (20) 85/03/21 (21) 86/12/08 (22) 87/07/13 (23) 87/10/08
(24) 89/04/06 (25) 89/09/25

BLOCK DIAGRAM
TAPE DECK DISPLAY DRIVER PCB 1.820.768

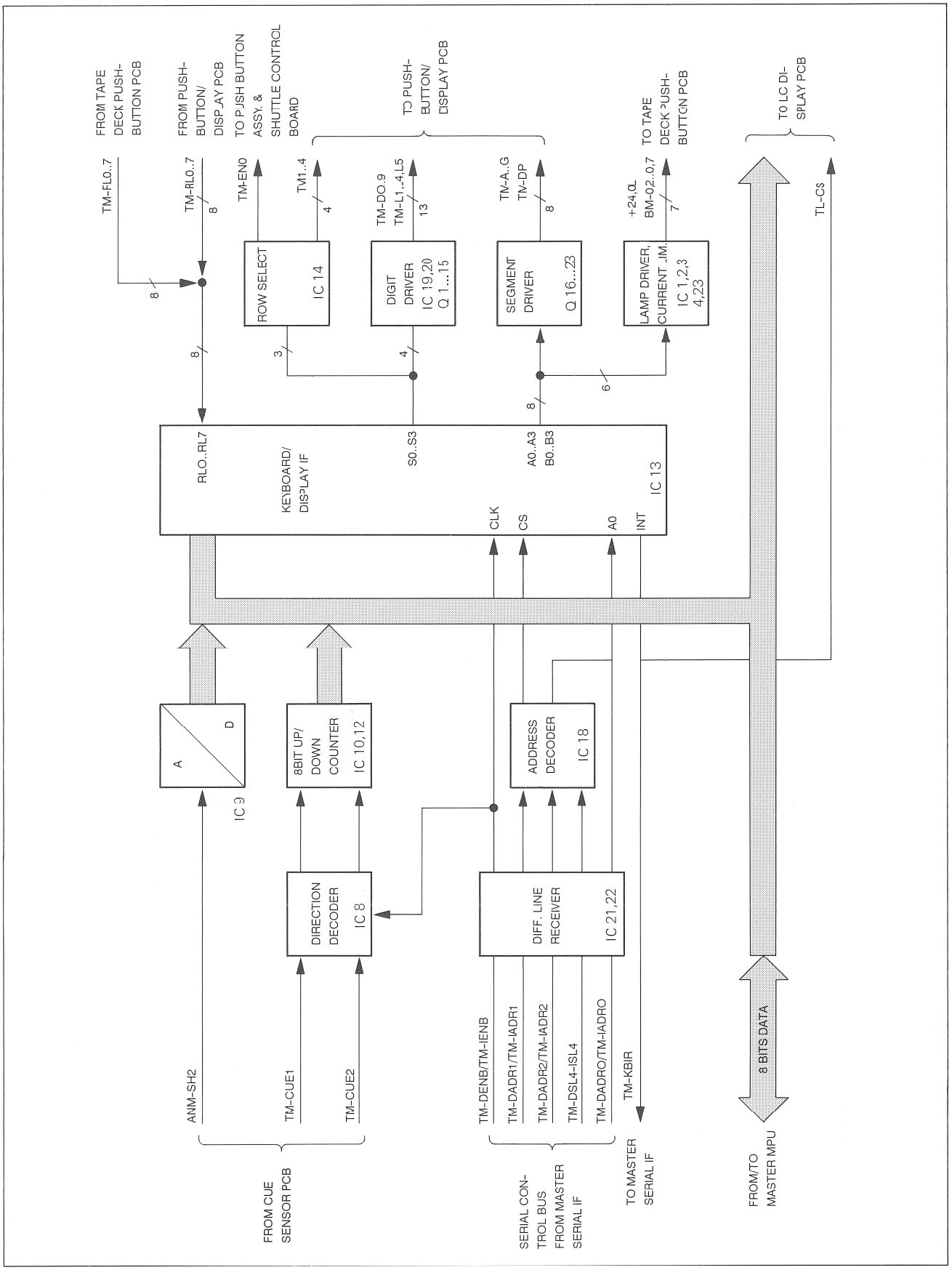

TAPE DECK DISPLAY DRIVER PCB 1.820.768.81

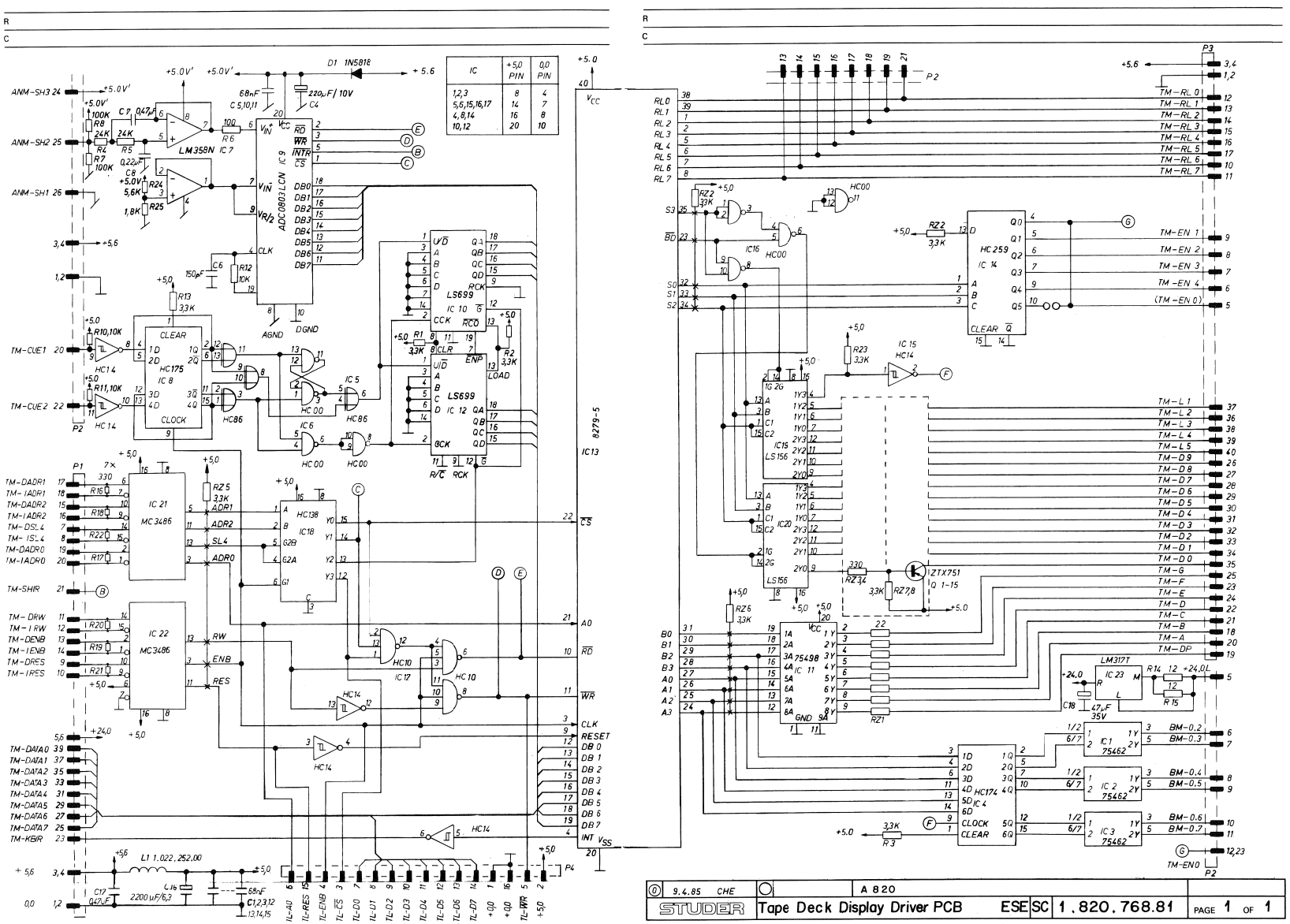

TAPE DECK DISPLAY DRIVER PCB 1.820.768.81

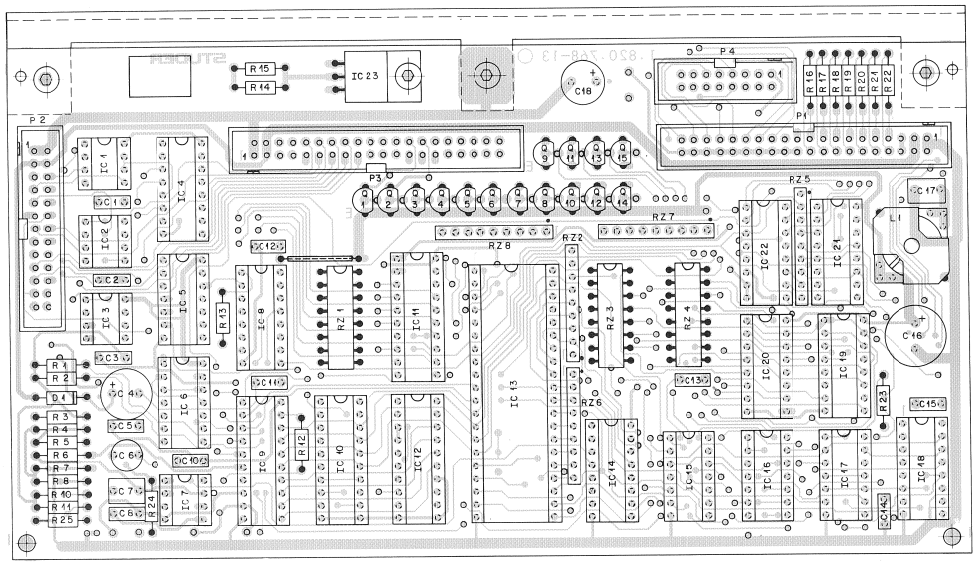

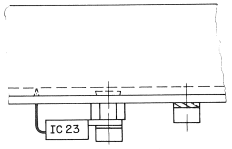

IND.	POS.NO.	PART NO.	VALUE	SPECIFICATIONS / EQUIVALENT	MANUF.
	C....1	59.06.0683	68 nF	-10%+ PETP	
	C....2	59.06.0683	68 nF	-10%+ PETP	
	C....3	59.06.0683	68 nF	-10%+ PETP	
	C....4	59.22.3221	220 uF	-20%+ 10V+ EI	
	C....5	59.06.0683	68 nF	-10%+ PETP	
	C....6	59.05.2151	150 pF	2.5%+ PP	
	C....7	59.06.0474	470 nF	-20%+ PETP	
	C....8	59.06.0224	220 nF	-20%+ PETP	
	C....10	59.06.0683	68 nF	-10%+ PETP	
	C....11	59.06.0683	68 nF	-10%+ PETP	
	C....12	59.06.0683	68 nF	-10%+ PETP	
	C....13	59.06.0683	68 nF	-10%+ PETP	
	C....14	59.06.0683	68 nF	-10%+ PETP	
	C....15	59.06.0683	68 nF	-10%+ PETP	
	C....16	59.22.4222	2200 uF	-20%+ 6.3V+ EI	
	C....17	59.06.0474	470 nF	-10%+ PETP	
	C....18	59.22.6470	47 uF	-10%+ 40V+ EI	
	D....1	50.04.0512	1N 5818	IN 5819	Mot
	IC....1	50.05.0227	SN 75462 P	SN 75462 JG+ SN 75472 P	TI
	IC....2	50.05.0227	SN 75462 P	SN 75462 JG+ SN 75472 P	TI
	IC....3	50.05.0227	SN 75462 P	SN 75462 JG+ SN 75472 P	TI
	IC....4	50.17.1174	74 HC 174		Mot+NS+Ph+RCA+SGS+TI+To
	IC....5	50.17.1086	74 HC 86		Mot+NS+Ph+RCA+TI+To
	IC....6	50.17.1000	74 HC 00		Mot+NS+Ph+RCA+TI+To
	IC....7	50.09.0286	LM 358 N	LM 358 P	Mot+NS+TI
	IC....8	50.17.1175	74 HC 175		Mot+NS+Ph+SGS+TI+To
	IC....9	50.07.0029	AUCOR01CN		Is+NS
	IC....10	50.06.0699	74 LS 699		Mot+NS+TI
	IC....11	50.15.0113	SN 75498 N		TI
	IC....12	50.06.0699	74 LS 699		Mot+NS+TI
	IC....13	50.16.0111	IP 8279-5	K N L 8279 P-5	It+Mi
	IC....14	50.17.1259	74 HC 259		Mot+NS+Ph+RCA+SGS+TI+To
	IC....15	50.17.1014	74 HC 14		Mot+NS+Ph+RCA+TI+To
	IC....16	50.17.1000	74 HC 00		Mot+NS+Ph+RCA+SGS+TI+To
	IC....17	50.17.1010	74 HC 10		Mot+NS+Ph+RCA+TI+To

IND.	POS.NO.	PART NO.	VALUE	SPECIFICATIONS / EQUIVALENT	MANUF.
	IC....18	50.17.1138	74 HC 138		Mot+NS+Ph+RCA+SGS+TI+To
	IC....19	50.06.0156	74 LS 156		Fe+NS+TI
	IC....20	50.06.0156	74 LS 156		Fe+NS+TI
	IC....21	50.15.0104	MC 3486 P	Ds 3486 N	Mot+NS
	IC....22	50.15.0104	MC 3486 P	Ds 3486 N	Mot+NS
	IC....23	50.10.0104	LM 317 T	...KC+ ...SP	Mot+NS+SGS+Thom+TI
	L....1	1.072.232.00	0.32 mH	Filter Coil	St
	P....1	54.14.2004		see note 1	
	P....2	54.14.2003		see note 2	
	P....3	54.14.2004		see note 1	
	P....4	54.14.2002		see note 3	
	Q....1	50.03.0352	ZTX 751 S		Fe
	Q....2	50.03.0352	ZTX 751 S		Fe
	Q....3	50.03.0352	ZTX 751 S		Fe
	Q....4	50.03.0352	ZTX 751 S		Fe
	Q....5	50.03.0352	ZTX 751 S		Fe
	Q....6	50.03.0352	ZTX 751 S		Fe
	Q....7	50.03.0352	ZTX 751 S		Fe
	Q....8	50.03.0352	ZTX 751 S		Fe
	Q....9	50.03.0352	ZTX 751 S		Fe
	Q....10	50.03.0352	ZTX 751 S		Fe
	Q....11	50.03.0352	ZTX 751 S		Fe
	Q....12	50.03.0352	ZTX 751 S		Fe
	Q....13	50.03.0352	ZTX 751 S		Fe
	Q....14	50.03.0352	ZTX 751 S		Fe
	Q....15	50.03.0352	ZTX 751 S		Fe
	R....1	57.11.4332	3.3 kOhm	2%	
	R....2	57.11.4332	3.3 kOhm	2%	
	R....3	57.11.4332	3.3 kOhm	2%	
	R....4	57.11.3243	24 kOhm	1%	
	R....5	57.11.3243	24 kOhm	1%	
	R....6	57.11.4101	100 Ohm	2%	
	R....7	57.11.4104	100 kOhm	2%	

IND.	POS.NO.	PART NO.	VALUE	SPECIFICATIONS / EQUIVALENT	MANUF.
	R....8	57.11.4104	100 kOhm	2%	
	R....10	57.11.4103	10 kOhm	2%	
	R....11	57.11.4103	10 kOhm	2%	
	R....12	57.11.4103	10 kOhm	2%	
	R....13	57.11.4332	3.3 kOhm	2%	
	R....14	57.11.4120	12 Ohm	2%	
	R....15	57.11.4120	12 Ohm	2%	
	R....16	57.11.4331	330 Ohm	2%	
	R....17	57.11.4331	330 Ohm	2%	
	R....18	57.11.4331	330 Ohm	2%	
	R....19	57.11.4331	330 Ohm	2%	
	R....20	57.11.4331	330 Ohm	2%	
	R....21	57.11.4331	330 Ohm	2%	
	R....22	57.11.4331	330 Ohm	2%	
	R....23	57.11.4332	3.3 kOhm	2%	
	R....24	57.11.3562	5.6 kOhm	1%	
	R....25	57.11.3182	1.8 kOhm	1%	
	RZ....1	57.88.3220		Network+ 8 * 22 Ohm+ 2%+ DIL 16	
	RZ....2	57.88.4332		Network+ 8 * 3.3 kOhm+ 5%+ single line	
	RZ....3	57.88.3331		Network+ 8 * 330 Ohm+ 2%+ DIL 16	
	RZ....4	57.88.3331		Network+ 8 * 330 Ohm+ 2%+ DIL 16	
	RZ....5	57.88.4332		Network+ 8 * 3.3 kOhm+ 5%+ single line	
	RZ....6	57.88.4332		Network+ 8 * 3.3 kOhm+ 5%+ single line	
	RZ....7	57.88.4332		Network+ 8 * 3.3 kOhm+ 5%+ single line	
	RZ....8	57.88.4332		Network+ 8 * 3.3 kOhm+ 5%+ single line	

Note 1 - Connector 40 contacts:
Yamaichi Nr. FAP-40-0824
Burndy Nr. BPH 9 B 40 000 GS

Note 2 - Connector 26 contacts:
Yamaichi Nr. FAP-26-0824
Burndy Nr. BPH 9 B 26 000 GS

Note 3 - Connector 16 contacts:
Yamaichi Nr. FAP-16-0824
Burndy Nr. BPH 9 B 16 000 GS

El=Electrolytic, PETP=Polyester, PP=Polypropylene

MANUFACTURERS: Fe=Fairchild, Fo=Ferranti, Is=Intersil, It=Intel,
Mi=Mitsubishi, Mot=Motorola,
NS=National Semiconductors, Ph=Philips,
RCA=RCA Corporation, Sk5=Sky5kan, St=Studer,
Thom=Thomson, TI=Texas Instruments, To=Toshiba.

ORIG 85/03/21

TAPE DECK DISPLAY DRIVER PCB 1.820.768.82

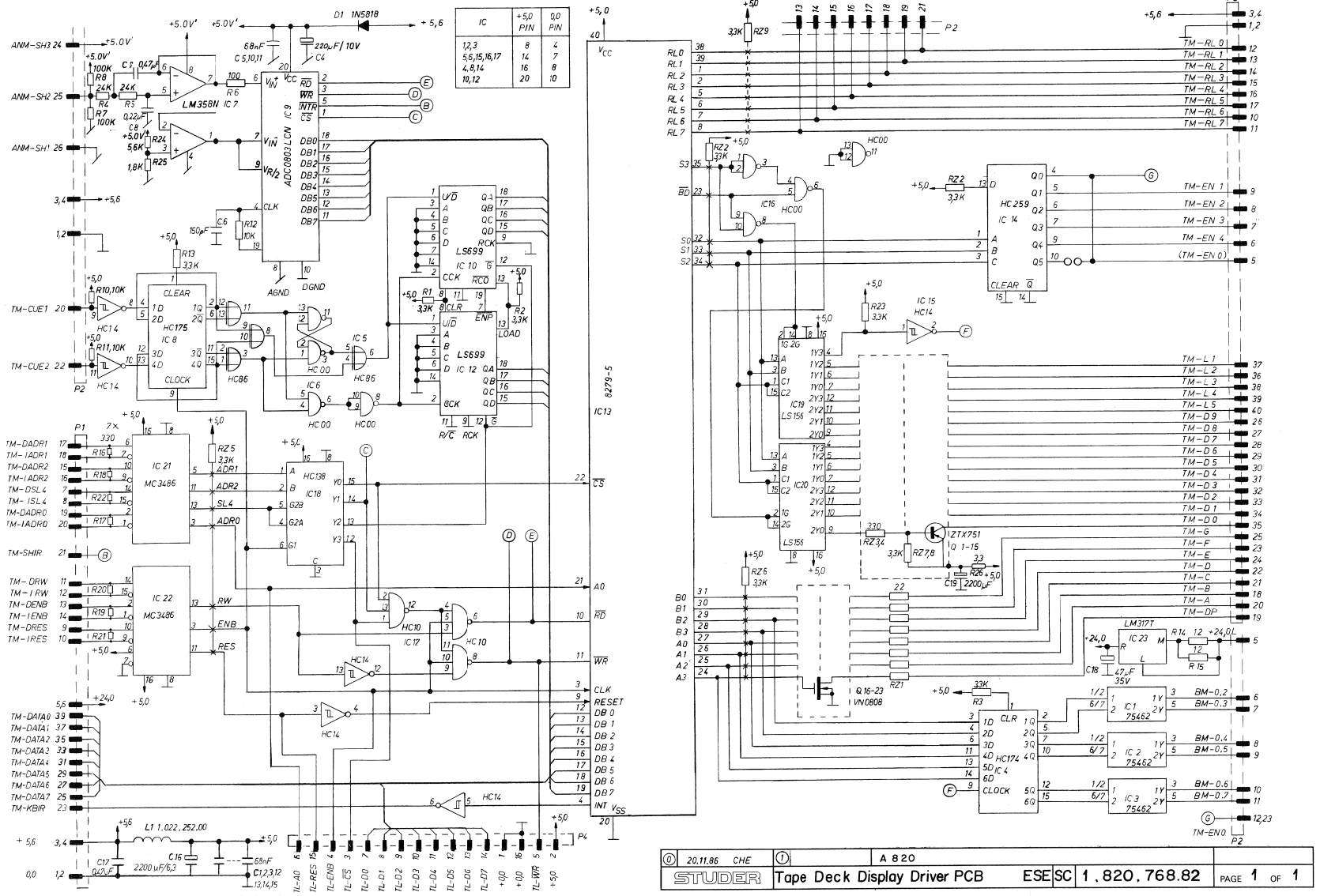

TAPE DECK DISPLAY DRIVER PCB 1.820.768.82

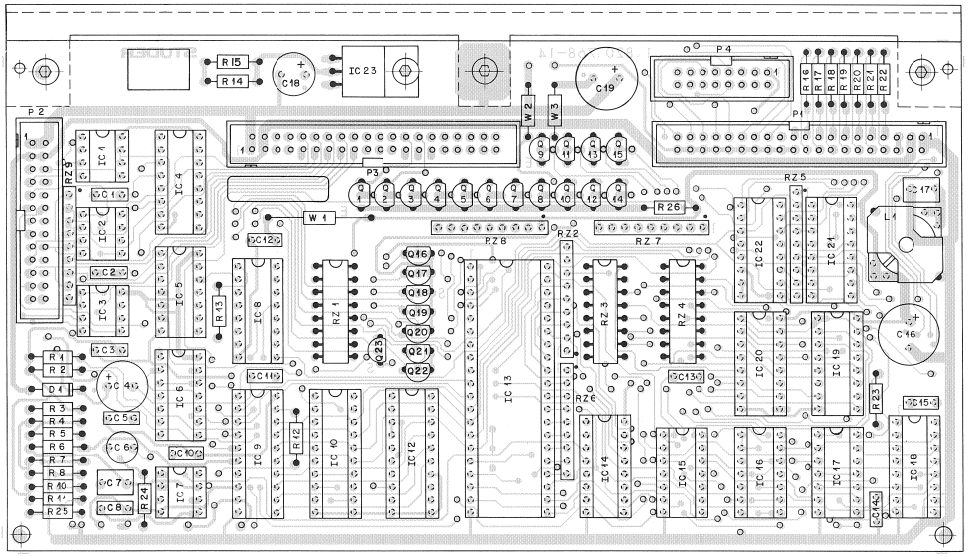

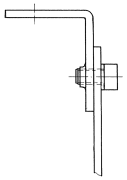

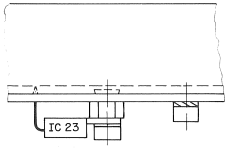

IND.	POS.NO.	PART NO.	VALUE	SPECIFICATIONS / EQUIVALENT	MANUF.
	IC....17	50.17.1010	74 HC 10		Mot,NS,Ph,RCA,TI,To
	IC....18	50.17.1138	74 HC 138		Mot,NS,Ph,RCA,SGS,TI,To
	IC....19	50.06.0156	74 LS 156		Fc,NS,TI
	IC....20	50.06.0156	74 LS 156		Fc,NS,TI
	IC....21	50.15.0104	MC 3486 P	DS 3486 N	Mot,NS
	IC....22	50.15.0104	MC 3486 P	DS 3486 N	Mot,NS
	IC....23	50.10.0104	LM 317 T	...KC, ...SP	Mot,NS,SGS,Tho,TI
	L.....1	1.822.252.00	0.32 mH	Filter Coil	St
	P.....1	54.14.2004		see note 1	
	P.....2	54.14.2003		see note 2	
	P.....3	54.14.2004		see note 1	
	P.....4	54.14.2002		see note 3	
	Q.....1	50.03.0352	ZTX 751 S		Fe
	Q.....2	50.03.0352	ZTX 751 S		Fe
	Q.....3	50.03.0352	ZTX 751 S		Fe
	Q.....4	50.03.0352	ZTX 751 S		Fe
	Q.....5	50.03.0352	ZTX 751 S		Fe
	Q.....6	50.03.0352	ZTX 751 S		Fe
	Q.....7	50.03.0352	ZTX 751 S		Fe
	Q.....8	50.03.0352	ZTX 751 S		Fe
	Q.....9	50.03.0352	ZTX 751 S		Fe
	Q.....10	50.03.0352	ZTX 751 S		Fe
	Q.....11	50.03.0352	ZTX 751 S		Fe
	Q.....12	50.03.0352	ZTX 751 S		Fe
	Q.....13	50.03.0352	ZTX 751 S		Fe
	Q.....14	50.03.0352	ZTX 751 S		Fe
	Q.....15	50.03.0352	ZTX 751 S		Fe
	Q.....16	50.03.1505	VN 0808M		Fe,Six
	Q.....17	50.03.1505	VN 0808M		Fe,Six
	Q.....18	50.03.1505	VN 0808M		Fe,Six
	Q.....19	50.03.1505	VN 0808M		Fe,Six
	Q.....20	50.03.1505	VN 0808M		Fe,Six
	Q.....21	50.03.1505	VN 0808M		Fe,Six
	Q.....22	50.03.1505	VN 0808M		Fe,Six

IND.	POS.NO.	PART NO.	VALUE	SPECIFICATIONS / EQUIVALENT	MANUF.
	Q.....23	50.03.1505	VN 0808M		Fe,Six
	R.....1	57.11.4332	3.3 kOhm	2%	
	R.....2	57.11.4332	3.3 kOhm	2%	
	R.....3	57.11.4332	3.3 kOhm	2%	
	R.....4	57.11.3243	24 kOhm	1%	
	R.....5	57.11.3243	24 kOhm	1%	
	R.....6	57.11.4101	100 Ohm	2%	
	R.....7	57.11.4104	100 kOhm	2%	
	R.....8	57.11.4104	100 kOhm	2%	
	R.....10	57.11.4103	10 kOhm	2%	
	R.....11	57.11.4103	10 kOhm	2%	
	R.....12	57.11.4103	10 kOhm	2%	
	R.....13	57.11.4332	3.3 kOhm	2%	
	R.....14	57.11.4120	12 Ohm	2%	
	R.....15	57.11.4120	12 Ohm	2%	
	R.....16	57.11.4331	330 Ohm	2%	
	R.....17	57.11.4331	330 Ohm	2%	
	R.....18	57.11.4331	330 Ohm	2%	
	R.....19	57.11.4331	330 Ohm	2%	
	R.....20	57.11.4331	330 Ohm	2%	
	R.....21	57.11.4331	330 Ohm	2%	
	R.....22	57.11.4331	330 Ohm	2%	
	R.....23	57.11.4332	3.3 kOhm	2%	
	R.....24	57.11.3562	5.6 kOhm	1%	
	R.....25	57.11.3102	1.0 kOhm	1%	
	R.....26	57.11.4339	3.3 Ohm	2%	
	RZ.....1	57.88.3220		Network, 8 * 22 Ohm, 2%, DIL 16	
	RZ.....2	57.88.4332		Network, 8 * 3.3 kOhm, 5%, single line	
	RZ.....3	57.88.3331		Network, 8 * 330 Ohm, 2%, DIL 16	
	RZ.....4	57.88.3331		Network, 8 * 330 Ohm, 2%, DIL 16	
	RZ.....5	57.88.4332		Network, 8 * 3.3 kOhm, 5%, single line	
	RZ.....6	57.88.4332		Network, 8 * 3.3 kOhm, 5%, single line	
	RZ.....7	57.88.4332		Network, 8 * 3.3 kOhm, 5%, single line	
	RZ.....8	57.88.4332		Network, 8 * 3.3 kOhm, 5%, single line	
	RZ.....9	57.88.4332		Network, 8 * 3.3 kOhm, 5%, single line	

IND.	POS.NO.	PART NO.	VALUE	SPECIFICATIONS / EQUIVALENT	MANUF.
	C.....1	59.06.0683	68 nF	-10%, PETP	
	C.....2	59.06.0683	68 nF	-10%, PETP	
	C.....3	59.06.0683	68 nF	-10%, PETP	
	C.....4	59.22.3221	220 uF	-20%, 10V, El	
	C.....5	59.06.0683	68 nF	-10%, PETP	
	C.....6	59.05.2151	150 pF	2.5%, PP	
	C.....7	59.06.0474	470 nF	-20%, PETP	
	C.....8	59.06.0224	220 nF	-20%, PETP	
	C.....10	59.06.0683	68 nF	-10%, PETP	
	C.....11	59.06.0683	68 nF	-10%, PETP	
	C.....12	59.06.0683	68 nF	-10%, PETP	
	C.....13	59.06.0683	68 nF	-10%, PETP	
	C.....14	59.06.0683	68 nF	-10%, PETP	
	C.....15	59.06.0683	68 nF	-10%, PETP	
	C.....16	59.22.2222	2200 uF	-20%, 6.3V, El	
	C.....17	59.06.0474	470 nF	-10%, PETP	
	C.....18	59.22.6470	47 uF	-10%, 40V, El	
	C.....19	59.22.2222	2200 uF	-20%, 6.3V, El	
	D.....1	50.04.0512	1N 5818	1N 5819	Mot
	IC....1	50.05.0227	SN 75462 P	SN 75462 JG, SN 75472 P	TI
	IC....2	50.05.0227	SN 75462 P	SN 75462 JG, SN 75472 P	TI
	IC....3	50.05.0227	SN 75462 P	SN 75462 JG, SN 75472 P	TI
	IC....4	50.17.1174	74 HC 174		Mot,NS,Ph,RCA,SGS,TI,To
	IC....5	50.17.1086	74 HC 86		Mot,NS,Ph,RCA,TI,To
	IC....6	50.17.1000	74 HC 00		Mot,NS,Ph,RCA,TI,To
	IC....7	50.05.0216	LM 358 N	LM 358 P	Mot,NS,TI
	IC....8	50.17.1175	74 HC 175		Mot,NS,Ph,SGS,TI,To
	IC....9	50.07.0019	ADC0801LCN		Is,NS
	IC...10	50.06.0699	74 LS 699		Mot,NS,TI
	IC...11		not used		
	IC...12	50.06.0699	74 LS 699		Mot,NS,TI
	IC...13	50.16.0111	IP 8279-5	M 5 L 8279 P-5	Is,Mi
	IC...14	50.17.1259	74 HC 259		Mot,NS,Ph,RCA,SGS,TI,To
	IC...15	50.17.1014	74 HC 14		Mot,NS,Ph,RCA,TI,To
	IC...16	50.17.1000	74 HC 00		Mot,NS,Ph,RCA,SGS,TI,To

IND.	POS.NO.	PART NO.	VALUE	SPECIFICATIONS / EQUIVALENT	MANUF.
(01)	W.....1	57.11.4000		0 Ohm Resistor or insulated wire bridge	
(01)	W.....2	57.11.4000		0 Ohm Resistor or insulated wire bridge	
(01)	W.....3	57.11.4000		0 Ohm Resistor or insulated wire bridge	

Note 1 - Connector 40 contacts:
Yamaichi Nr. FAP-40-0824
Burndy Nr. BPH 9 B 40 800 GS

Note 2 - Connector 26 contacts:
Yamaichi Nr. FAP-26-0824
Burndy Nr. BPH 9 B 26 800 GS

Note 3 - Connector 16 contacts:
Yamaichi Nr. FAP-16-0824
Burndy Nr. BPH 9 B 16 800 GS

El=Electrolytic, PETP=Polyester, PP=Polypropylene

MANUFACTURERS: Fc=Fairchild, Fa=Ferranti, Is=Intersil, It=Intel,
Mi=Mitsubishi, Mot=Motorola,
NS=National Semiconductors, Ph=Philips,
RCA=RCA Corporation, SGS=SGS/Ates, Six=Siliconix,
St=Studer, Tho=Thomson, TI=Texas Instruments,
To=Toshiba.

ORIG 86/10/30

PUSH BUTTON ASSEMBLY 1.820.240.00
–TAPE DECK PUSH BUTTON PCB 1.820.769.00
–TAPE DECK INDICATOR PCB 1.820.766.00

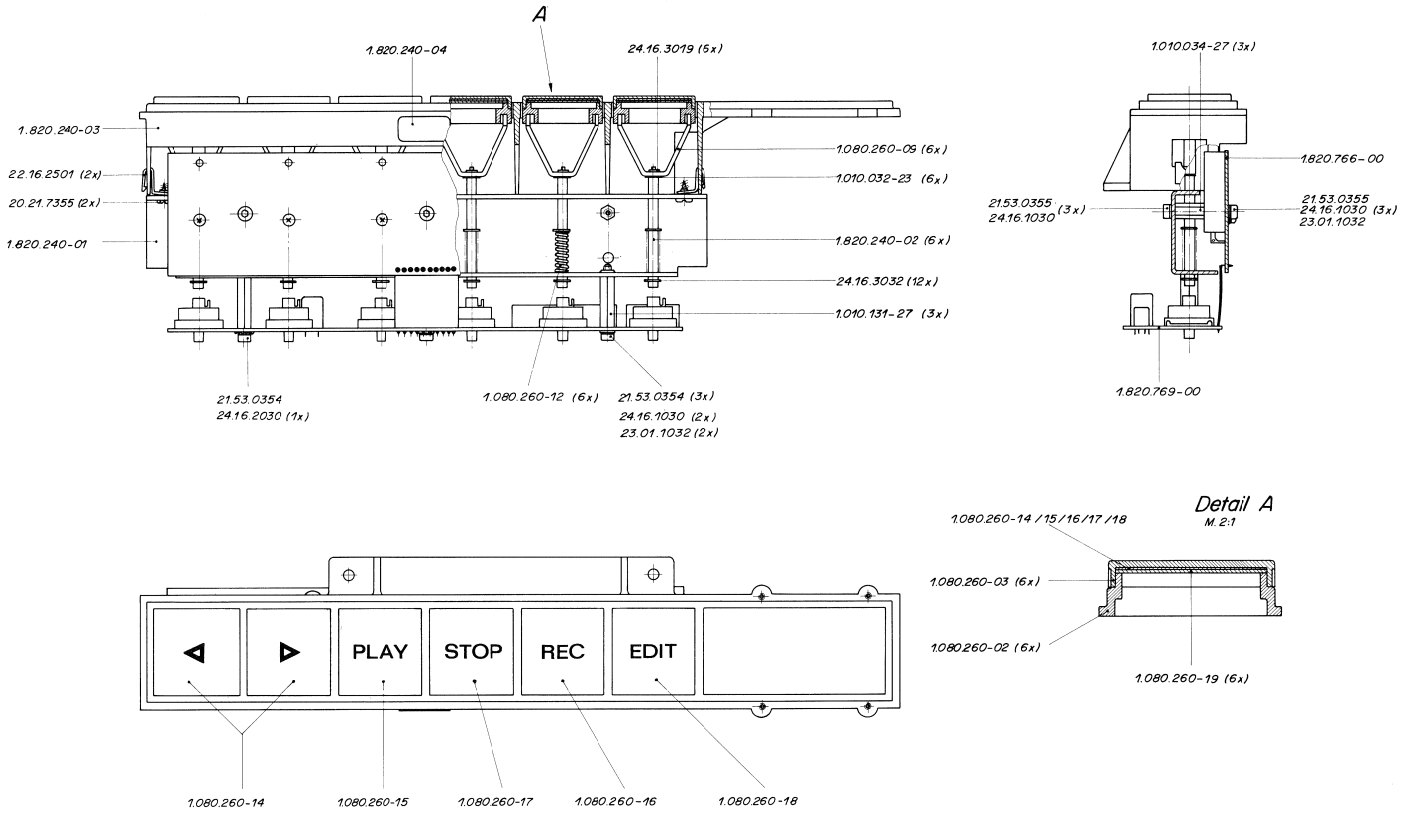

PUSH BUTTON ASSEMBLY 1.820.240.00
–TAPE DECK PUSH BUTTON 1.820.769.00
–TAPE DECK INDICATOR PCB 1.820.766.00

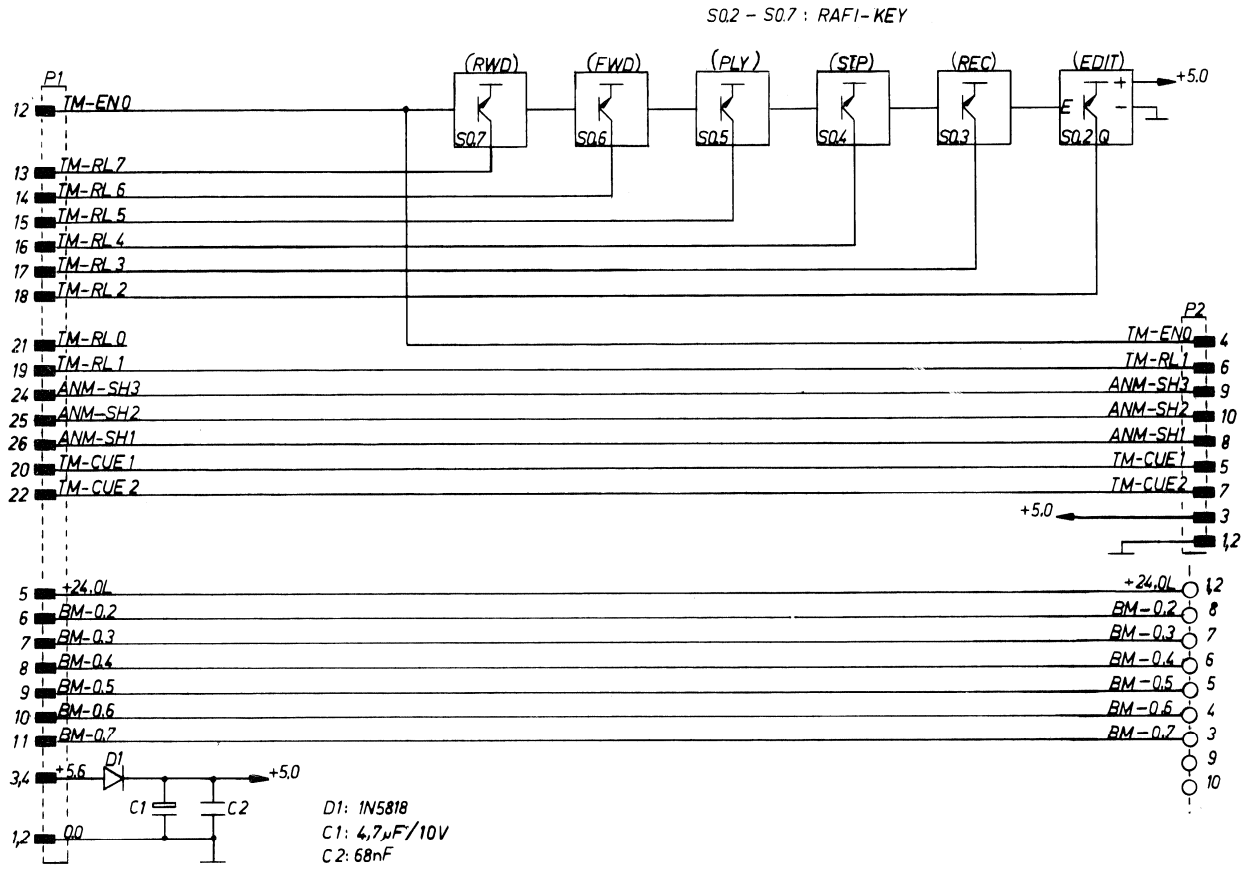

23.11.84 SU	A820 Command Section		
STUDER	Tape Deck Push Button PCB	SC 1.820.769.00	PAGE 1 OF 1

PUSH BUTTON ASSEMBLY 1.820.240.00
–TAPE DECK PUSH BUTTON PCB 1.820.769.00
–TAPE DECK INDICATOR PCB 1.820.766.00

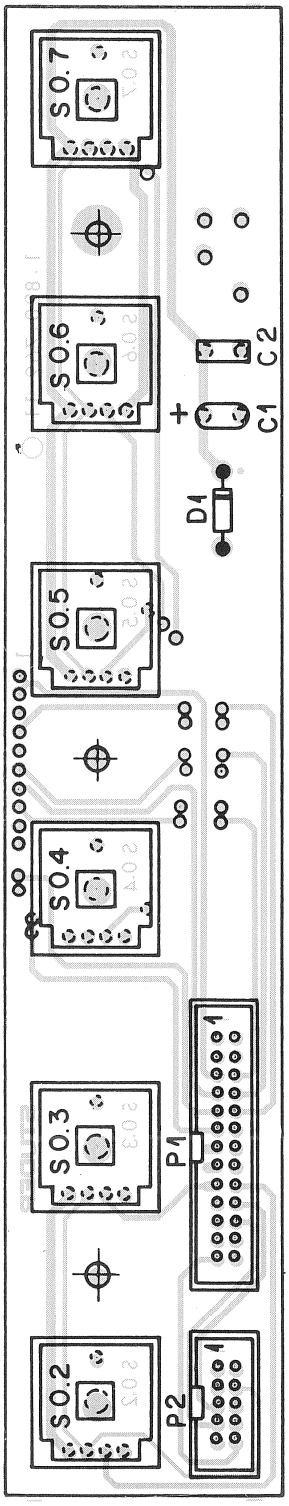

IND.	POS.NO.	PART NO.	VALUE	SPECIFICATIONS / EQUIVALENT	MANUF.
	C.....1	59.26.1479	4.7 uF	-20%, 10V , Sal	Ph
	C.....2	59.06.0683	68 nF	-10%, 63V , PETP	
	D.....1	50.04.0512	1 N 5818	1 N 5819	Mot
	P.....1	54.14.2003		see note 1	
	P.....2	54.14.2001		see note 2	
	S...0.2	55.03.0261		Pushbutton switch, RAFI nr. 3.13001.110	
	S...0.3	55.03.0261		Pushbutton switch, RAFI nr. 3.13001.110	
	S...0.4	55.03.0261		Pushbutton switch, RAFI nr. 3.13001.110	
	S...0.5	55.03.0261		Pushbutton switch, RAFI nr. 3.13001.110	
	S...0.6	55.03.0261		Pushbutton switch, RAFI nr. 3.13001.110	
	S...0.7	55.03.0261		Pushbutton switch, RAFI nr. 3.13001.110	

Note 1 - connector 26 contacts: Yamaichi nr. FAP-26-0824
Burndy nr. BPH 9 B 26 B00 GS

Note 2 - connector 10 contacts: Yamaichi nr. FAP-10-0824
Burndy nr. BPH 7 B 10 B00 GS

Sal=Solid Aluminium, PETP=Metallized Polyesterfilm

MANUFACTURER: Mot=Motorola, Ph=Philips

ORIG 84/11/23

S T U D E R (00) 84/11/23 CHE TAPE DECK PUSHBUTTON BOARD 1.820.769.00 PAGE 1

PUSH BUTTON ASSEMBLY 1.820.240.00
–TAPE DECK PUSH BUTTON 1.820.769.00
–TAPE DECK INDICATOR PCB 1.820.766.00

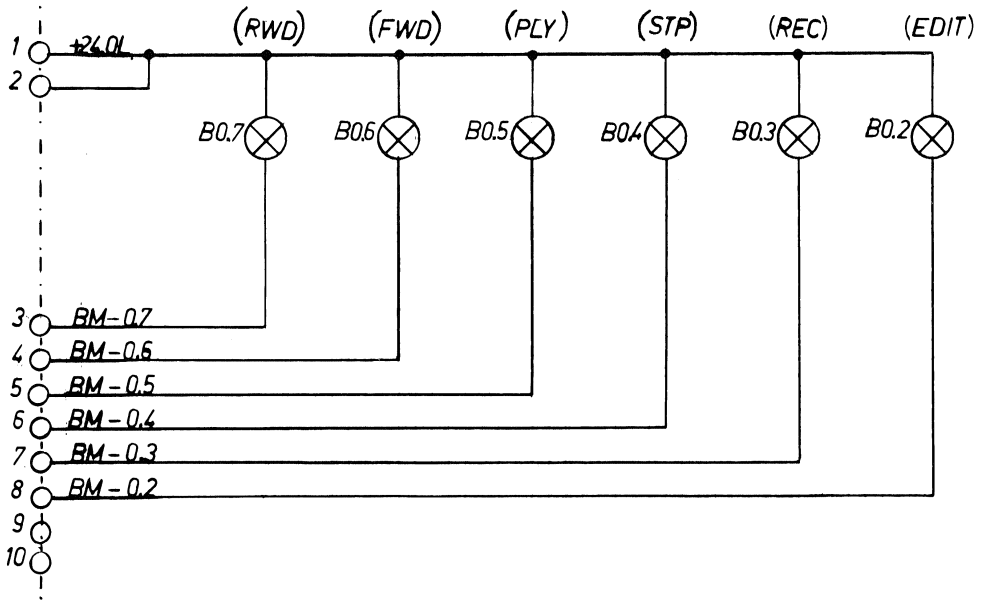

B0.2 - B0.7: 24V / 0.04A T5.5 XB0.2 - XB0.7: LAMP HOLDER

23.11.84 R.SUTER		A 820 Command Section		
STUDER	Tape Deck Indicator PCB	SC	1.820.766.00	PAGE 1 OF 1

PUSH BUTTON ASSEMBLY 1.820.240.00
–TAPE DECK PUSH BUTTON 1.820.769.00
–TAPE DECK INDICATOR PCB 1,820.766.00

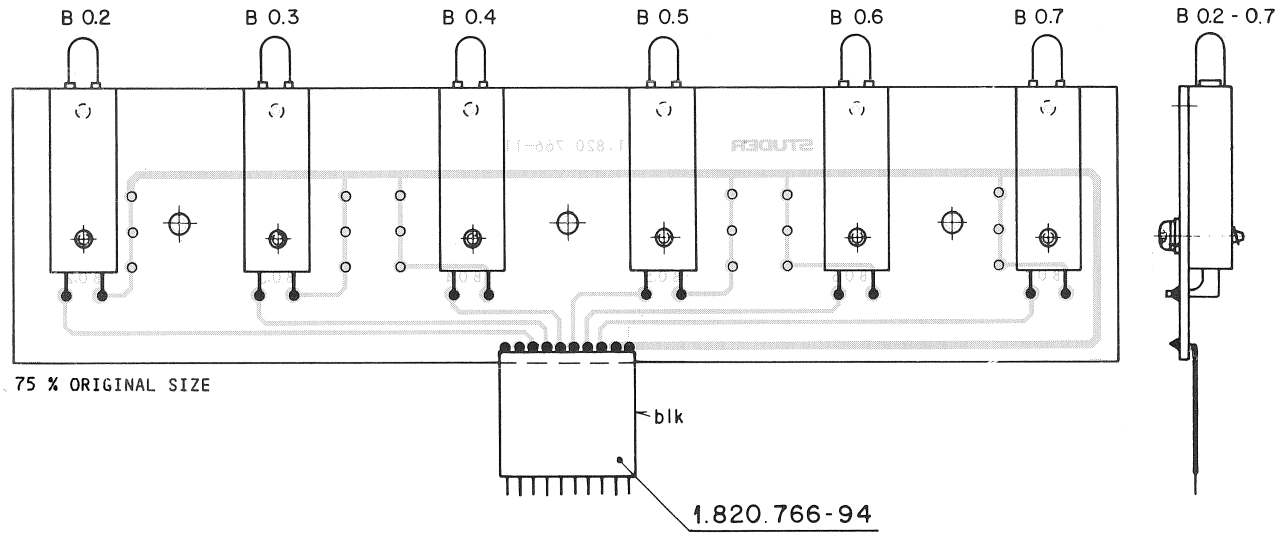

IND.	POS.NO.	PART NO.	VALUE	SPECIFICATIONS / EQUIVALENT	MANUF.
	B...0.2	51.02.0145	24 V	see note 1	
	B...0.3	51.02.0145	24 V	see note 1	
	B...0.4	51.02.0145	24 V	see note 1	
	B...0.5	51.02.0145	24 V	see note 1	
	B...0.6	51.02.0145	24 V	see note 1	
	B...0.7	51.02.0145	24 V	see note 1	
	XB..0.2	1.080.265.00		lamp holder	St
	XB..0.3	1.080.265.00		lamp holder	St
	XB..0.4	1.080.265.00		lamp holder	St
	XB..0.5	1.080.265.00		lamp holder	St
	XB..0.6	1.080.265.00		lamp holder	St
	XB..0.7	1.080.265.00		lamp holder	St

Note 1 - Indicator lamp: Taunuslicht nr. 5530 24 V, 40 mA
Oshino nr. OL - 552440

MANUFACTURER: St=Studer

ORIG 84/11/23

S T U D E R (00) 84/11/23 CHE TAPE DECK INDICATOR BOARD 1.820.766.00 PAGE 1

EDIT ASSEMBLY 1.820.250.00
–CUE SENSOR PCB 1.820.765.00
–SHUTTLE CONTROL PCB 1.820.776.00

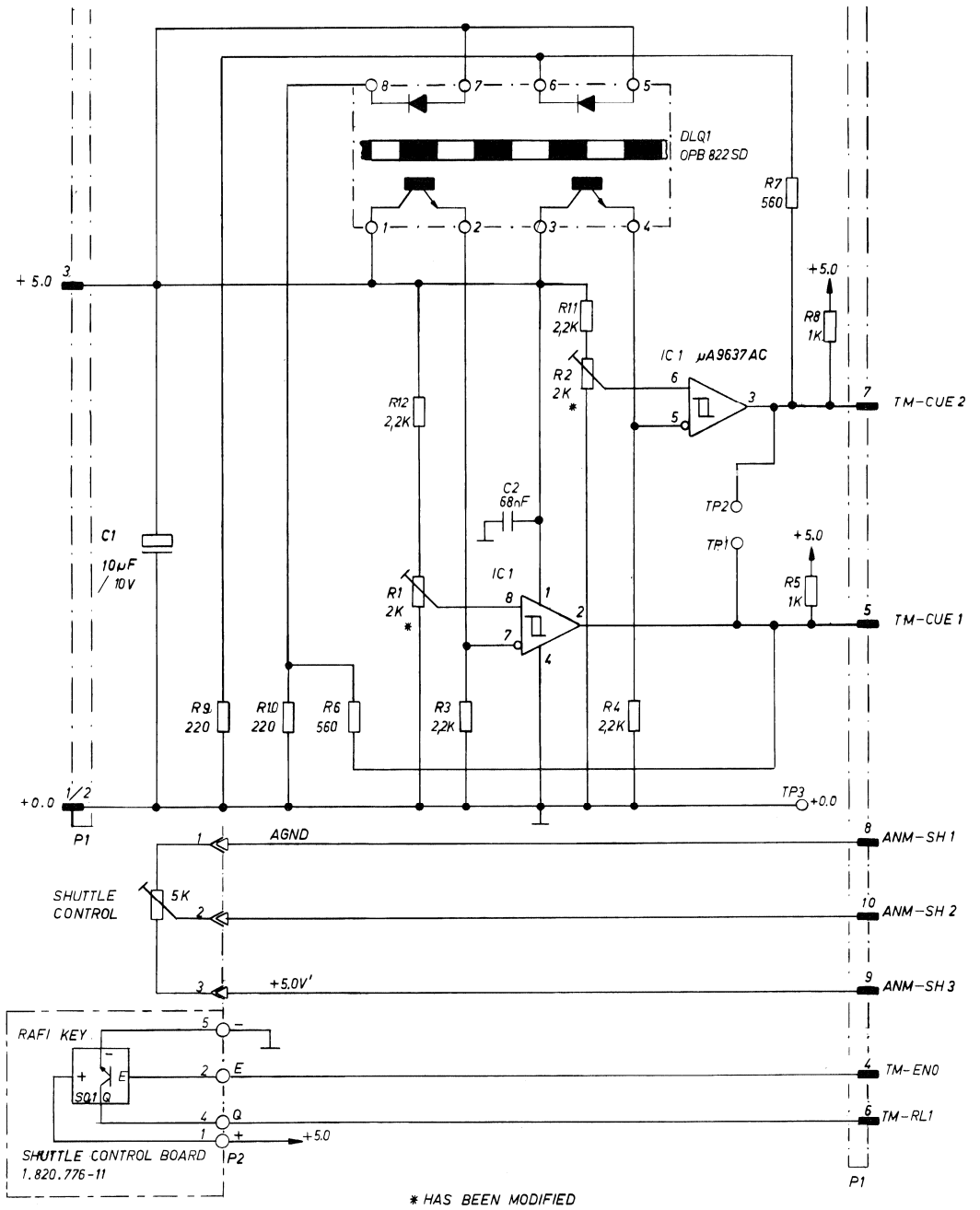

⓪ 4.12.84 CHE	① 21.01.85 CHE	A 820 Command Section		
STUDER	Cue sensor board	SC	1.820.765-00	PAGE 1 OF 1

EDIT ASSEMBLY 1.820.250.00
–CUE SENSOR PCB 1.820.765.00
–SHUTTLE CONTROL PCB 1.820.776.00

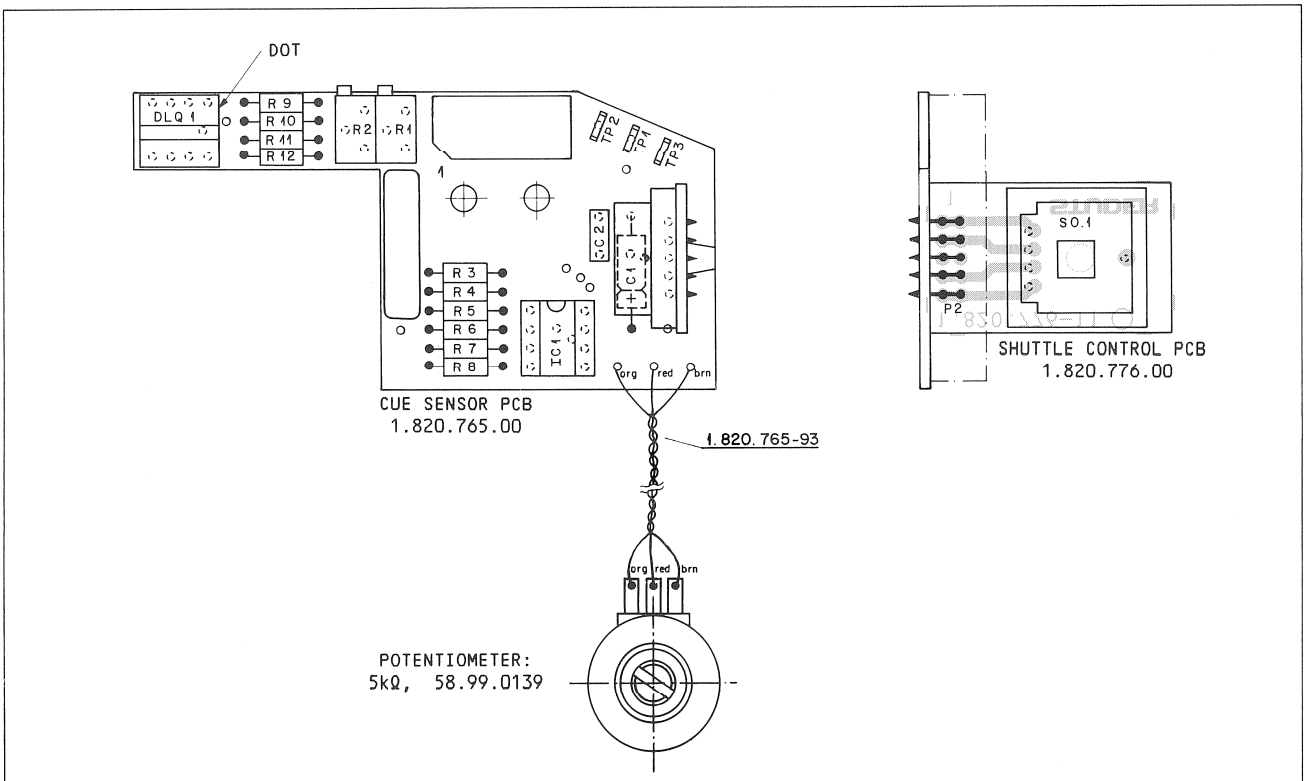

IND.	POS.NO.	PART NO.	VALUE	SPECIFICATIONS / EQUIVALENT	MANUF.
	C.....1	59.25.4100	10 uF	-20%, 10V, El	
	C.....2	59.06.0683	68 nF	-10%, 63V, PETP	
	OPTO...1	1.820.765.01		Dual Optical Switch, see note 1	St
	IC.....1	50.15.0114	uA9637 ATC	uA9637 ACP	Fc,TI
	P.....1	1.073.110.03		Flat Cable 10 pole, see note 2	
	P.....2	54.01.0269	5 cont.	AMP Nr. -163.740-3	
(00)	R.....1	58.05.0501	500 Ohm	see note 3	
(01)	R.....1	58.05.0202	2 kOhm	see note 3	
(00)	R.....2	58.05.0501	500 Ohm	see note 3	
(01)	R.....2	58.05.0202	2 kOhm	see note 3	
	R.....3	57.11.4222	2.2 kOhm	2%	
	R.....4	57.11.4222	2.2 kOhm	2%	
	R.....5	57.11.4102	1 kOhm	2%	
	R.....6	57.11.4561	560 Ohm	2%	
	R.....7	57.11.4561	560 Ohm	2%	
	R.....8	57.11.4102	1 kOhm	2%	
	R.....9	57.11.4221	220 Ohm	2%	
	R.....10	57.11.4221	220 Ohm	2%	
	R.....11	57.11.4222	2.2 kOhm	2%	
	R.....12	57.11.4222	2.2 kOhm	2%	
	S.....1	55.03.0261	TTL-switch	1 * OC, Rafi Nr. 3.13001.110	
	TP.....1	54.02.0320		Test Point	
	TP.....2	54.02.0320		Test Point	
	TP.....3	54.02.0320		Test Point	

IND.	POS.NO.	PART NO.	VALUE	SPECIFICATIONS / EQUIVALENT	MANUF.
	P.....1	54.01.0223		CIS MALE CONNECTOR 7 PIN	
	S.....1	55.03.0261	1 * OC TTL	RAFI PUSHBUTTON	

ORIG 84/01/04

(01) 85.01.21 Extension of adjust margin.

Note 1 - Optical switch, assembled by Studer, consist of
OPB 822 SD (Optron).

Note 2 - Flat cable: Studer Nr. 64.03.0213

PCB Transition Header: Studer Nr. 54.14.5024
Yamaichi Nr. FGP-10-02
Burndy Nr. BP00B 10 R00GS

Socket Type: Studer Nr. 54.14.5020
Yamaichi Nr. FAS-10-17
Burndy Nr. FRS-10 B0-4P

Note 3 - Potentiometer 2 kOhm, 10%, 0.5W
Bourns Nr. 3296 Z-1-202
Spectrol Nr. 64 Z 202 T 000
Contelec Nr. 183 XZ 202
Murata Nr. POT 3105 Z-1-202

El=electrolytic, PETP=Polyester

MANUFACTURER: Fc=Fairchild, St=Studer, TI=Texas Instruments

ORIG 84/12/04 (01) 85/01/21

PUSH BUTTON DISPLAY PCB 1.820.767.00

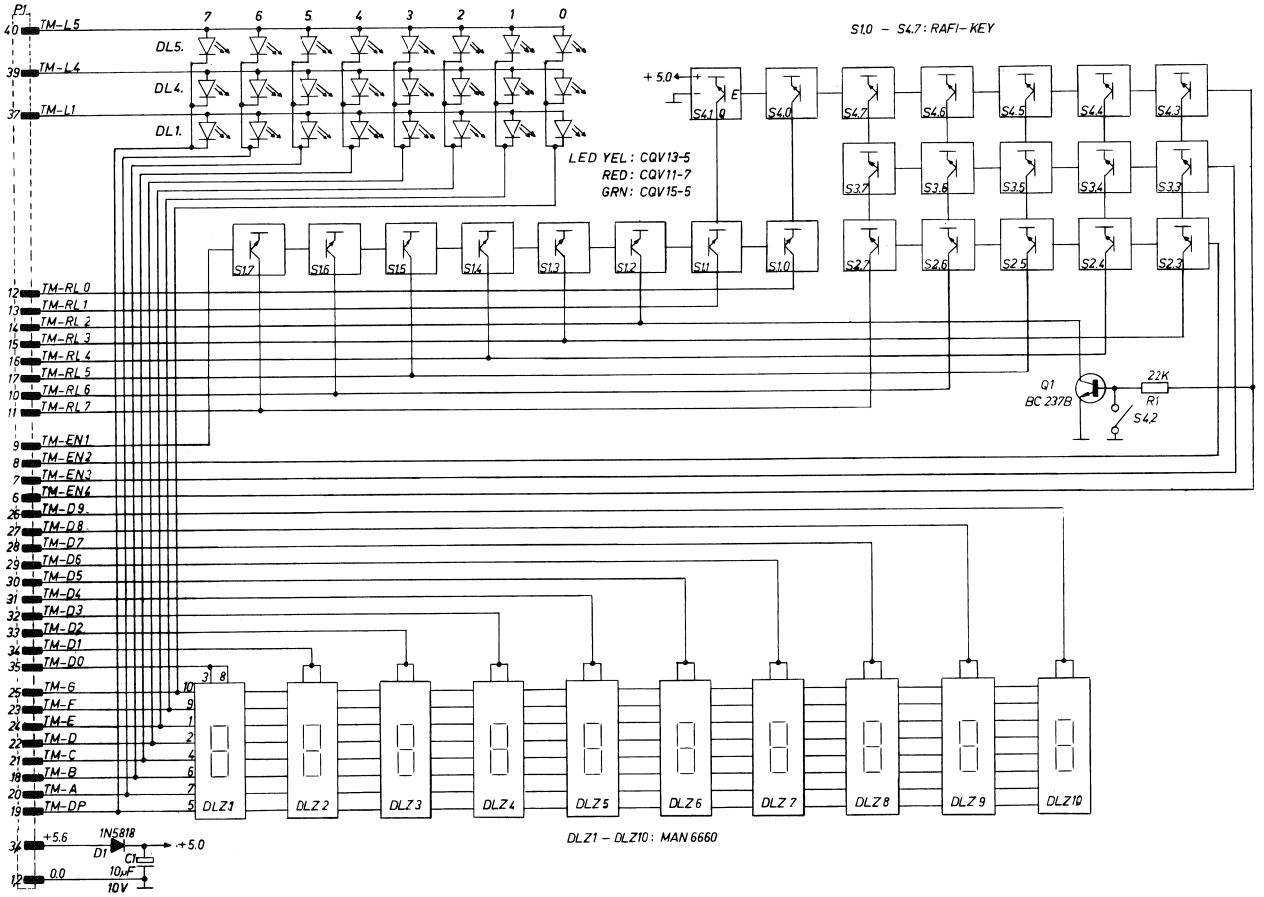

29.11.84 R.SUTER		A820 Command Section		
STUDER	Push Button / Display PCB	SC	1.820.767.00	PAGE 1 OF 1

PUSH BUTTON DISPLAY PCB 1.820.767.00

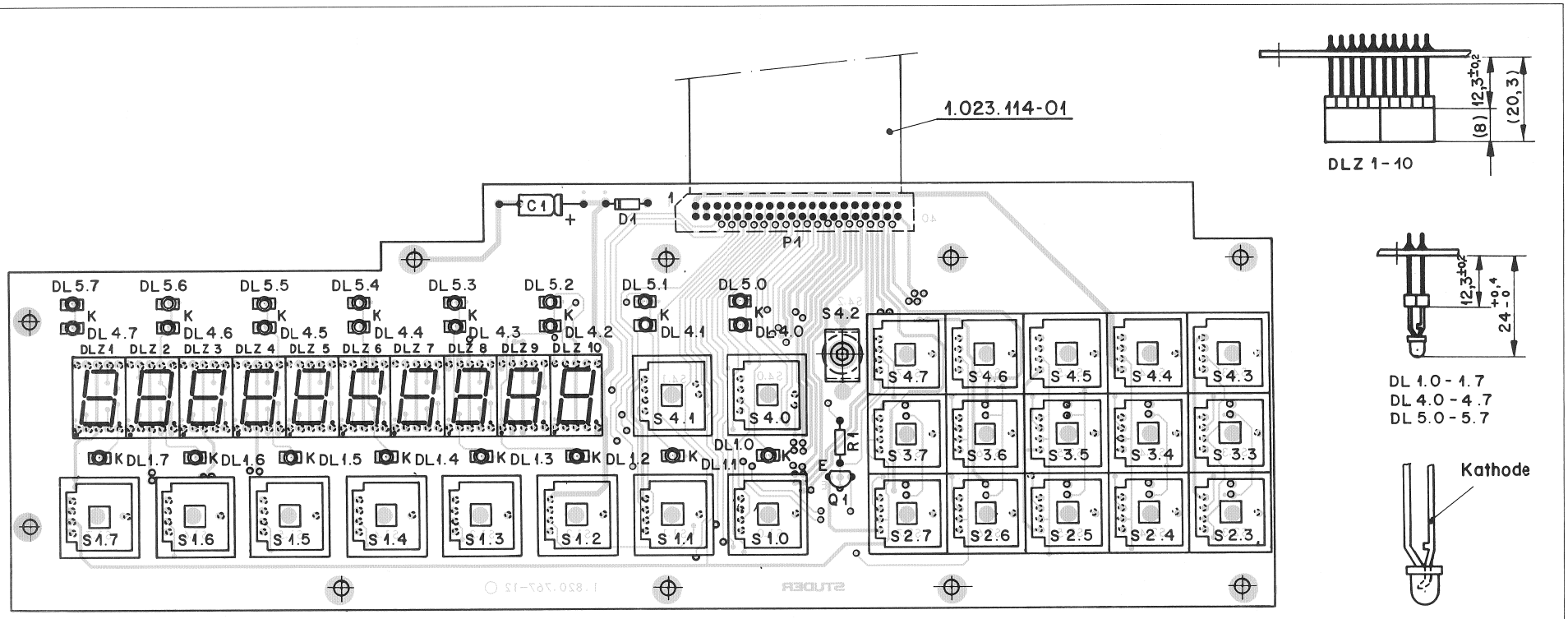

IND.	POS.NO.	PART NO.	VALUE	SPECIFICATIONS / EQUIVALENT	MANUF.
	C.....1	59.22.6470	47 uF	-20%, 25V, ET	
	D.....1	50.04.0512	1N 5818	1N 5819	Mot
	DL..1.0	50.04.2130	CQV 13-7	LED, Yellow	Sie
	DL..1.1	50.04.2130	CQV 13-7	LED, Yellow	Sie
	DL..1.2	50.04.2130	CQV 13-7	LED, Yellow	Sie
	DL..1.3	50.04.2130	CQV 13-7	LED, Yellow	Sie
	DL..1.4	50.04.2130	CQV 13-7	LED, Yellow	Sie
	DL..1.5	50.04.2130	CQV 13-7	LED, Yellow	Sie
	DL..1.6	50.04.2130	CQV 13-7	LED, Yellow	Sie
	DL..1.7	50.04.2130	CQV 13-7	LED, Yellow	Sie
	DL..4.0	50.04.2130	CQV 13-7	LED, Yellow	Sie
	DL..4.1	50.04.2130	CQV 13-7	LED, Yellow	Sie
	DL..4.2	50.04.2130	CQV 13-7	LED, Yellow	Sie
	DL..4.3	50.04.2130	CQV 13-7	LED, Yellow	Sie
	DL..4.4	50.04.2131	CQV 15-5	LED, Green, CQV 15-6	Sie
	DL..4.5	50.04.2129	CQV 11-7	LED, Red	Sie
	DL..4.6	50.04.2130	CQV 13-7	LED, Yellow	Sie
	DL..4.7	50.04.2131	CQV 15-5	LED, Green, CQV 15-6	Sie
	DL..5.0	50.04.2130	CQV 13-7	LED, Yellow	Sie
	DL..5.1	50.04.2129	CQV 11-7	LED, Red	Sie
	DL..5.2	50.04.2130	CQV 13-7	LED, Yellow	Sie
	DL..5.3	50.04.2130	CQV 13-7	LED, Yellow	Sie
	DL..5.4	50.04.2130	CQV 13-7	LED, Yellow	Sie
	DL..5.5	50.04.2130	CQV 13-7	LED, Yellow	Sie
	DL..5.6	50.04.2130	CQV 13-7	LED, Yellow	Sie
	DL..5.7	50.04.2130	CQV 13-7	LED, Yellow	Sie
	DLZ...1	73.01.0124	MAN 6660	7-Segments, Red, Brightness "G"	GI
	DLZ...2	73.01.0124	MAN 6660	7-Segments, Red, Brightness "G"	GI
	DLZ...3	73.01.0124	MAN 6660	7-Segments, Red, Brightness "G"	GI
	DLZ...4	73.01.0124	MAN 6660	7-Segments, Red, Brightness "G"	GI
	DLZ...5	73.01.0124	MAN 6660	7-Segments, Red, Brightness "G"	GI
	DLZ...6	73.01.0124	MAN 6660	7-Segments, Red, Brightness "G"	GI
	DLZ...7	73.01.0124	MAN 6660	7-Segments, Red, Brightness "G"	GI
	DLZ...8	73.01.0124	MAN 6660	7-Segments, Red, Brightness "G"	GI

IND.	POS.NO.	PART NO.	VALUE	SPECIFICATIONS / EQUIVALENT	MANUF.
	DLZ...9	73.01.0124	MAN 6660	7-Segments, Red, Brightness "G"	GI
	DLZ..10	73.01.0124	MAN 6660	7-Segments, Red, Brightness "G"	GI
	P.....1	1.023.114.01		Flat cable 40 pole, see note 1	St
	Q.....1	50.03.0436	BC 237 B	BC 547 B, BC 550 B	ITT,Mot,Ph,Sie
	R.....1	57.11.4223	22 kOhm	2%	
	S...1.0	55.03.0261	TTL-switch	1 * OC, Rafi Nr. 3.13001.110	
	S...1.1	55.03.0261	TTL-switch	1 * OC, Rafi Nr. 3.13001.110	
	S...1.2	55.03.0261	TTL-switch	1 * OC, Rafi Nr. 3.13001.110	
	S...1.3	55.03.0261	TTL-switch	1 * OC, Rafi Nr. 3.13001.110	
	S...1.4	55.03.0261	TTL-switch	1 * OC, Rafi Nr. 3.13001.110	
	S...1.5	55.03.0261	TTL-switch	1 * OC, Rafi Nr. 3.13001.110	
	S...1.6	55.03.0261	TTL-switch	1 * OC, Rafi Nr. 3.13001.110	
	S...1.7	55.03.0261	TTL-switch	1 * OC, Rafi Nr. 3.13001.110	
	S...2.3	55.03.0261	TTL-switch	1 * OC, Rafi Nr. 3.13001.110	
	S...2.4	55.03.0261	TTL-switch	1 * OC, Rafi Nr. 3.13001.110	
	S...2.5	55.03.0261	TTL-switch	1 * OC, Rafi Nr. 3.13001.110	
	S...2.6	55.03.0261	TTL-switch	1 * OC, Rafi Nr. 3.13001.110	
	S...2.7	55.03.0261	TTL-switch	1 * OC, Rafi Nr. 3.13001.110	
	S...3.3	55.03.0261	TTL-switch	1 * OC, Rafi Nr. 3.13001.110	
	S...3.4	55.03.0261	TTL-switch	1 * OC, Rafi Nr. 3.13001.110	
	S...3.5	55.03.0261	TTL-switch	1 * OC, Rafi Nr. 3.13001.110	
	S...3.6	55.03.0261	TTL-switch	1 * OC, Rafi Nr. 3.13001.110	
	S...3.7	55.03.0261	TTL-switch	1 * OC, Rafi Nr. 3.13001.110	
	S...4.0	55.03.0261	TTL-switch	1 * OC, Rafi Nr. 3.13001.110	
	S...4.1	55.03.0261	TTL-switch	1 * OC, Rafi Nr. 3.13001.110	
	S...4.2	1.820.767.01		Contact bow	
	S...04.2	1.820.767.02		Insulator Sleeve	
	S...4.2	1.010.494.22		Rivet nut	
	S...4.2	21.53.0371		Screw, M 3 * 14	
	S...4.3	55.03.0261	TTL-switch	1 * OC, Rafi Nr. 3.13001.110	
	S...4.4	55.03.0261	TTL-switch	1 * OC, Rafi Nr. 3.13001.110	
	S...4.5	55.03.0261	TTL-switch	1 * OC, Rafi Nr. 3.13001.110	
	S...4.6	55.03.0261	TTL-switch	1 * OC, Rafi Nr. 3.13001.110	

IND.	POS.NO.	PART NO.	VALUE	SPECIFICATIONS / EQUIVALENT	MANUF.
	S...4.7	55.03.0261	TTL-switch	1 * OC, Rafi Nr. 3.13001.110	

Note 1 - Flat cable: Studer Nr. 64.03.0216

PCB Transition Header: Studer Nr. 54.14.5027
Yamaichi Nr. FGP-40-02
Burndy Nr. 8P008 40 RU065

Socket Type: Studer Nr. 54.14.5023
Yamaichi Nr. FAS-40-17
Burndy Nr. FRS-40 BD-7P

El=Electrolytic

MANUFACTURERS: GI=General Instruments, ITT=Intermetall, Mot=Motorola, Ph=Philips, Sie=Siemens, St=Studer.

Date 84/11/28

LC DISPLAY UNIT 1.820.233.82
–LCD MODULE 73.01.0125
–LC DISPLAY CONNECTOR PCB 1.820.797.82

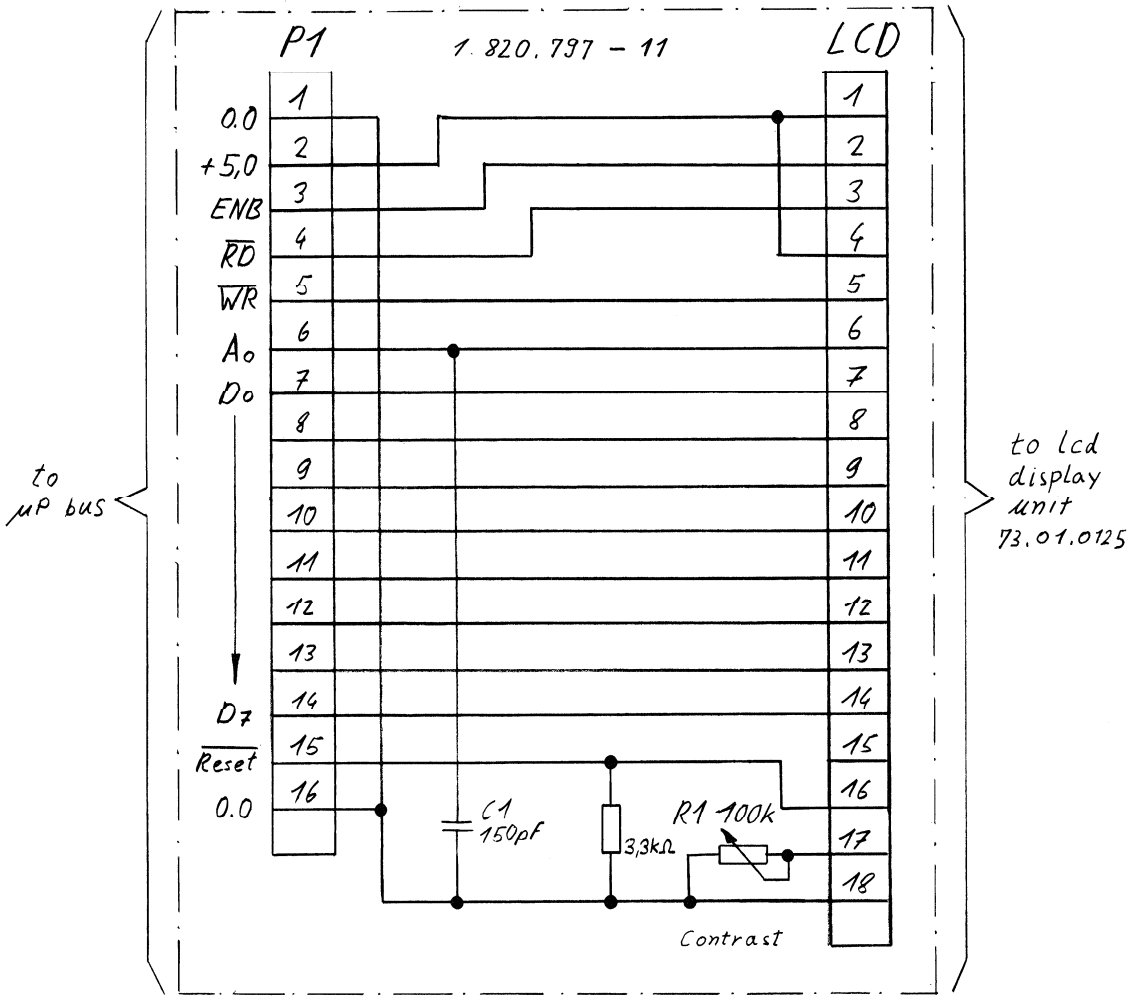

10.5.84 Ed		A820		
STUDER	Display Connection Board		1.820.233-83	PAGE 1 OF 1

LC DISPLAY UNIT 1.820.233.82
–LCD MODULE 73.01.0125
–LC DISPLAY CONNECTOR PCB 1.820.797.82

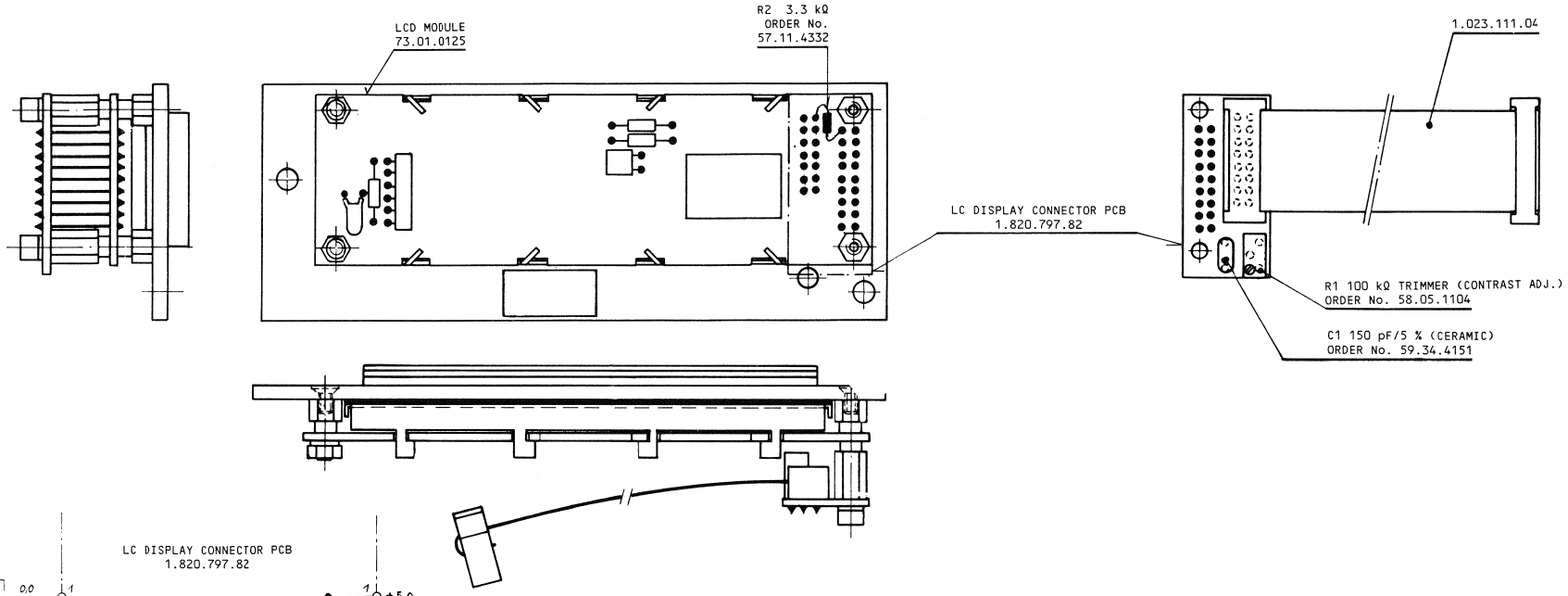

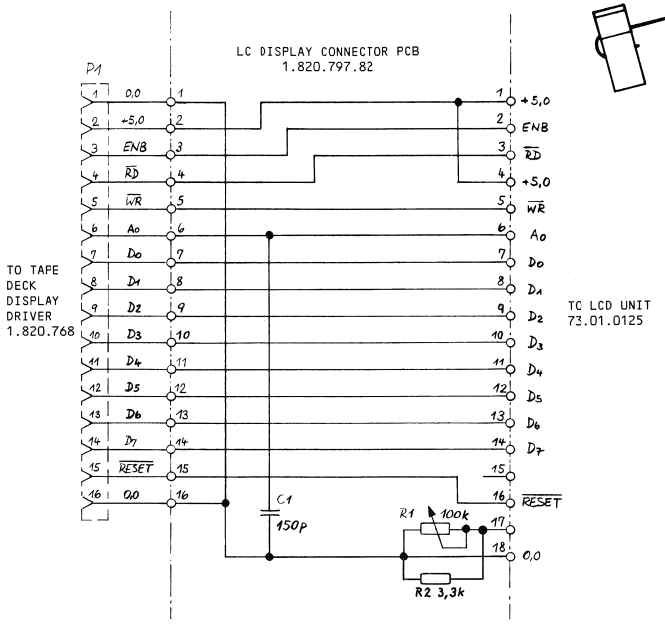

8. Audio Section and Panel Section

ESE = Electrostatically sensitive assembly

Contents			GRP/ELM	
Block diagram audio control & VU-meter panel				8/1
Operating mode: Repro/Sync/Input				8/2
(SR/A) Record with Input/Repro/Monitor				8/2
Calibration Tone mode				8/3
Alignment mode/autocompare				8/3
MPU audio control	1.820.782.20	ESE	GRP21/ELM21	8/5
Block diagram communications controller	1.820.718.00	ESE	GRP21/ELM20	8/7
Communications controller	1.820.718.00	ESE	GRP21/ELM20	8/9
Communications controller	1.820.718.81	ESE	GRP21/ELM20	8/11
Communications controller	1.820.718.82	ESE	GRP27/ELM20	8/13
Block diagram generator unit	1.820.725.00	ESE	GRP21/ELM22	8/15
Generator unit	1.820.725.00	ESE	GRP21/ELM22	8/17
Generator unit	1.820.725.81	ESE	GRP21/ELM22	8/19
Block diagram generator unit	1.820.825.00	ESE	GRP21/ELM22	8/21
Generator unit	1.820.825.00	ESE	GRP21/ELM22	8/23
Test generator board	1.820.826.00	ESE	GRP21/ELM22	8/25
Block diagram multichannel bus driver	1.820.723.00	ESE	GRP21/ELM24	8/27
Multichannel bus driver	1.820.723.00	ESE	GRP21/ELM24	8/29
Basis board audio control	1.820.702.00	ESE	GRP21	8/31
Basis board audio control	1.820.802.00	ESE	GRP21	8/33
Block diagram external NRS controller	1.820.816.00	ESE	GRP21/ELM23	8/35
External NRS controller	1.820.816.00	ESE	GRP21/ELM23	8/37
Block diagram bus converter	1.820.717.00	ESE	ASY2/3/4/GRP1/2	8/39
Bus converter	1.820.717.00	ESE	ASY2/3/4/GRP1/2	8/41
Basis board audio 4CH	1.820.703.00	ESE	ASY3/4/5/GRP1	8/43
Distribution board audio rack	1.820.778.82	ESE		8/45
Level diagram line amplifier	1.820.714.00	ESE	ASY3/4/5/GRP1/2	8/47
Line amplifier with transformer	1.820.714.83	ESE	ASY3/4/5/GRP1/2	8/49
Line amplifier with transformer	1.820.714.84	ESE	ASY3/4/5/GRP1/2	8/51
Line amplifier with transformer	1.820.814.00	ESE	ASY3/4/5/GRP1/2	8/53
Line amplifier transformerless	1.820.715.81	ESE	ASY3/4/5/GRP1/2	8/57
Line amplifier transformerless	1.820.715.82	ESE	ASY3/4/5/GRP1/2	8/59
Line amplifier transformerless	1.820.715.83	ESE	ASY3/4/5/GRP1/2	8/61
- Line output amplifer	1.820.862.00	ESE	ASY3/4/5/GRP1/2	8/63
Line input connection board	1.820.863.00		ASY2/GRP11	8/65
Line input connection board	1.820.864.00		ASY2/GRP11	8/67
Level diagram record amplifier HX-PRO	1.820.811.00	ESE	ASY3/4/5/GRP1/2	8/69
Record amplifier HX-PRO	1.820.811.00	ESE	ASY3/4/5/GRP1/2	8/71
- Adaptation board	1.820.741.00		ASY3/4/5/GRP1/2	8/71
Record amplifier HX-PRO	1.820.811.81	ESE	ASY3/4/5/GRP1/2	8/73
HF-Driver HX-PRO	1.820.813.81	ESE	ASY3/4/5/GRP1/2	8/75
Block diagram reproduce preamplifier	1.820.808.81	ESE		8/77
Reproduce preamplifier 8CH	1.820.808.81	ESE	ASY2/GRP2-4	8/79
Reproduce preamplifier 8CH	1.820.808.82	ESE	ASY2/GRP2-4	8/81
Block diagram reproduce amplifier	1.820.710.00	ESE	ASY3/4/5/GRP1/2	8/83
Level diagram reproduce amplifier	1.820.710.00	ESE	ASY3/4/5/GRP1/2	8/84
Reproduce amplifier	1.820.710.83	ESE	ASY3/4/5/GRP1/2	8/85
Reproduce amplifier	1.820.710.84	ESE	ASY3/4/5/GRP1/2	8/87
Reproduce amplifier	1.820.710.85	ESE	ASY3/4/5/GRP1/2	8/89
Block diagram switching+metering unit	1.820.716.00	ESE	ASY3/4/5/GRP1/2	8/91

Switching+metering unit	1.820.716.00 ESE	ASY3/4/5/GRP1/2	8/93
Block diagram internal NRS controller	1.820.815.00 ESE	ASY3/4/5/GRP1/2	8/95
Internal NRS controller	1.820.815.00 ESE	ASY3/4/5/GRP1/2	8/97
Block diagram internal NRS controller SR/A	1.820.824.00 ESE	ASY3/4/5/GRP1/2	8/101
Internal NRS controller SR/A	1.820.824.00 ESE	ASY3/4/5/GRP1/2	8/103
Metering board	1.820.807.00 ESE	ASY3/4/5/GRP1/2	8/10
Basis board NRS SR/A	1.820.806.00 ESE	ASY3/4/5/GRP	8/107
Basis board NRS Telcom C4e	1.820.807.00 ESE	ASY3/4/5/GRP	8/109
Basis board NRS SR/A/Telcom C4dm	1.820.809.00 ESE	ASY3/4/5/GRP4	8/113
Block diagram time code line amplifier	1.820.820.00 ESE	ASY3/4/5	8/117
Time code line amplifier	1.820.820.81 ESE	ASY3/4/5	8/119
Time code line amplifier	1.820.820.82 ESE	ASY3/4/5	8/121
Time code read unit	1.820.821.00 ESE	ASY3/4/5	8/123
Head assembly identifier board	1.820.795.00 ESE	ASY2/GRP1	8/125
Basis board VU-panel	1.820.705.00 ESE	ASY6/GRP1	8/127
DC-converter 5.6V	1.820.706.00 ESE	ASY6/GRP4	8/129
MPU VU-panel	1.820.783.20 ESE	ASY6/GRP2	8/131
Bargraph board 8CH	1.820.736.00 ESE	ASY6/GRP13-15	8/133
Keyboard driver 8CH	1.820.709.00 ESE	ASY6/GRP5-7	8/135
Control keyboard 8CH	1.820.708.00 ESE	ASY6/GRP9-11	8/137
Master keyboard	1.820.817.00 ESE	ASY6/GRP12	8/139
Audio alignment keyboard	1.820.707.00 ESE	ASY6/GRP16	8/141

BLOCK DIAGRAM
AUDIO CONTROL AND VU–METER PANEL

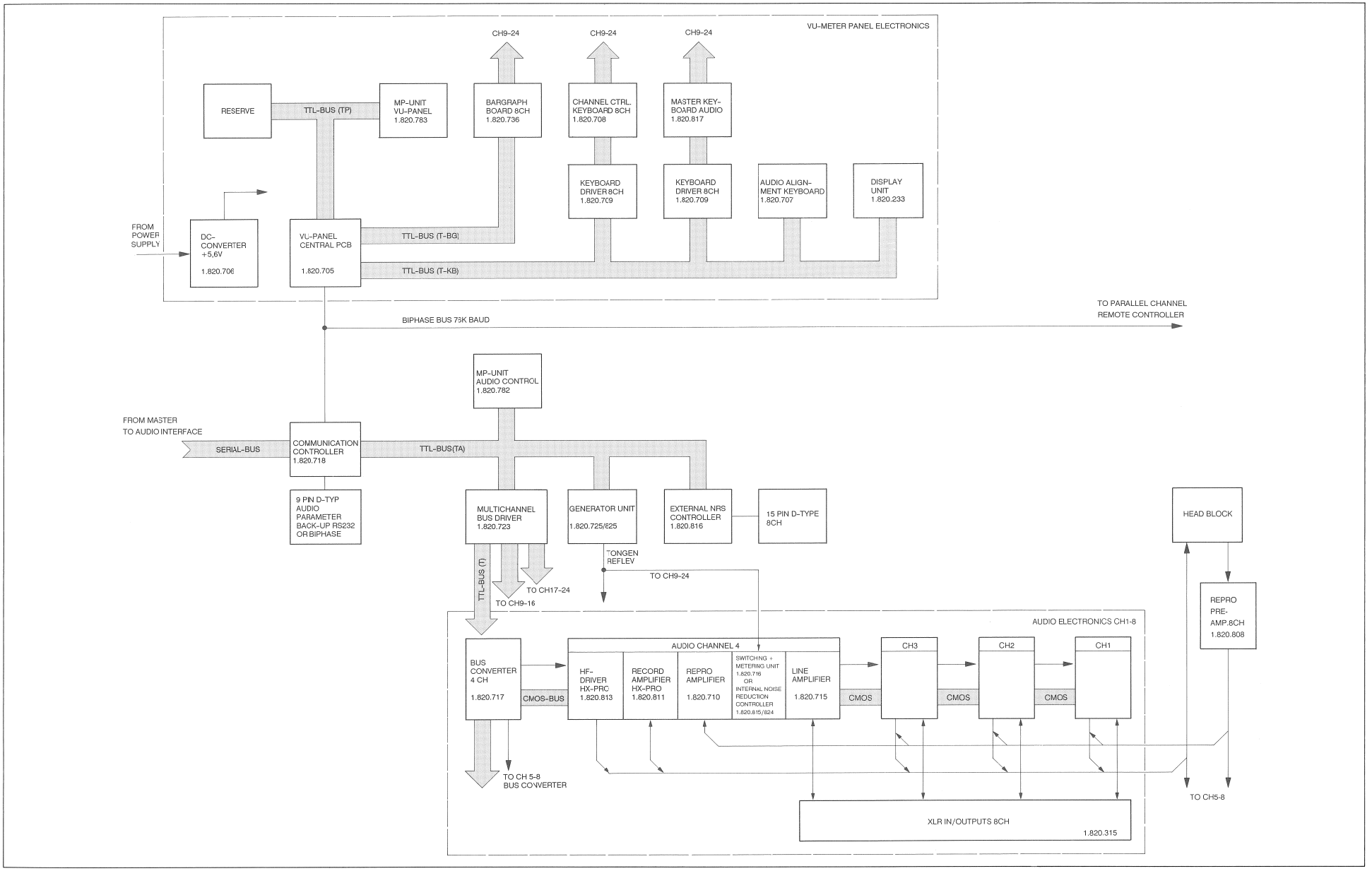

OPERATING MODE: REPRO / SYNC / INPUT

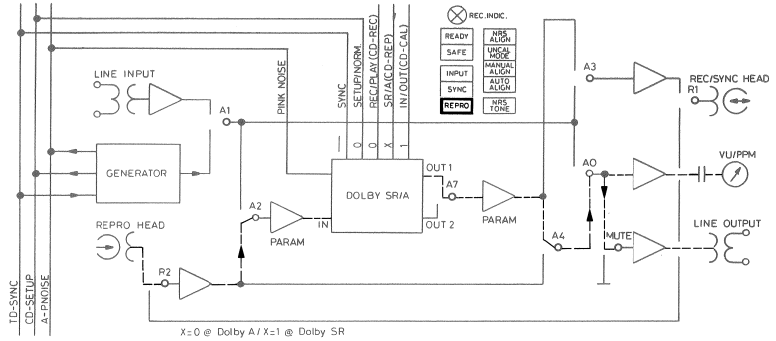

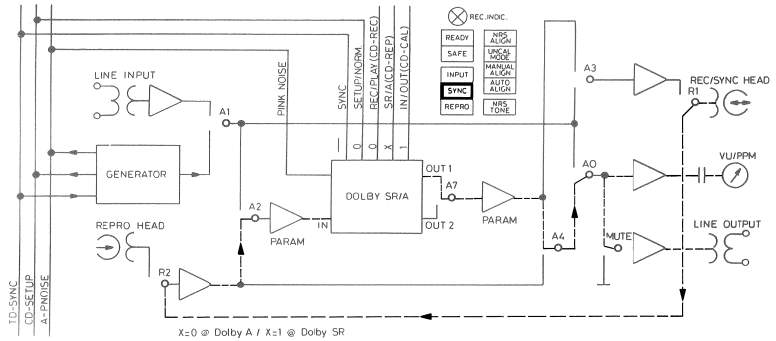

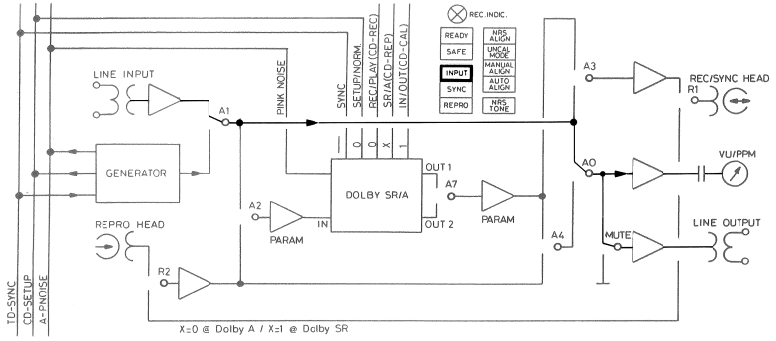

0 13.10.1988 DUB			
	OPERATING MODE : REPRO / SYNC / INPUT		PAGE 1 OF 4
STUDER	OPTION SR/A		A 820 MCH

OPERATING MODE: RECORD WITH INPUT / REPRO / MONITOR

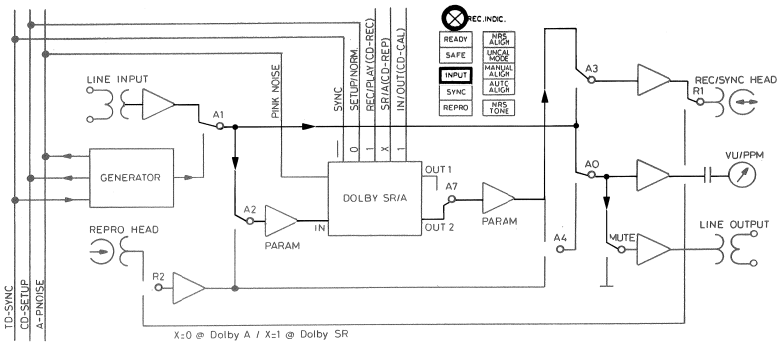

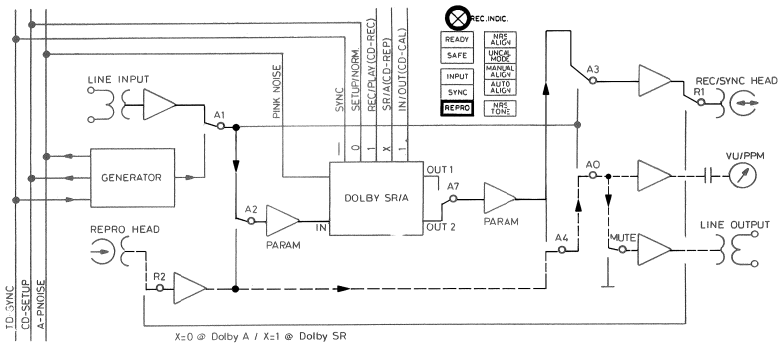

0 13.10.1988 DUB			
	OPERATING MODE : RECORD WITH INPUT/REPRO MONIT.		PAGE 2 OF 4
STUDER	OPTION SR/A		A 820 MCH

CALIBRATION TONE MODE

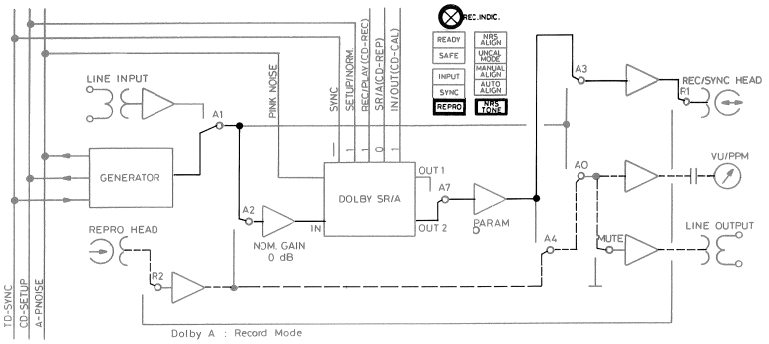

Dolby A : Record Mode

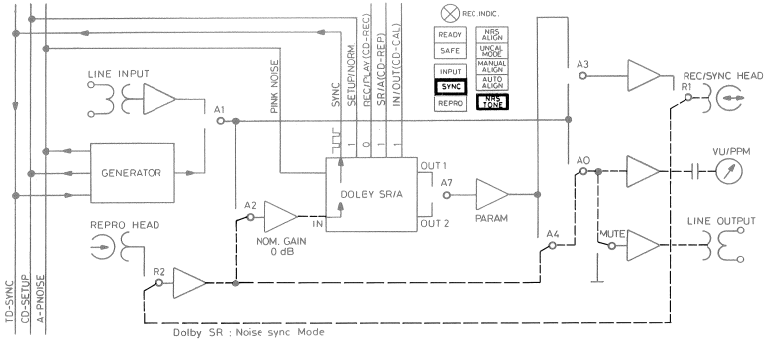

Dolby SR : Noise sync Mode

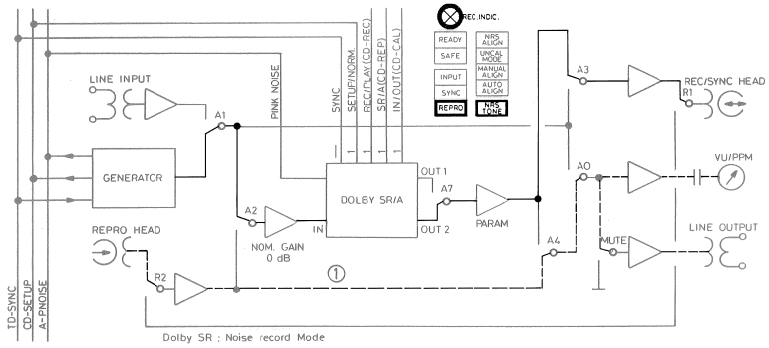

Dolby SR : Noise record Mode

⓪ 13.10.1988 DUB	① 7.03.89 DUB		
	CALIBRATION TONE MODE		PAGE 3 OF 4
STUDER	OPTION SR/A		A 820 MCH

ALIGNMENT MODE / AUTOCOMPARE SR

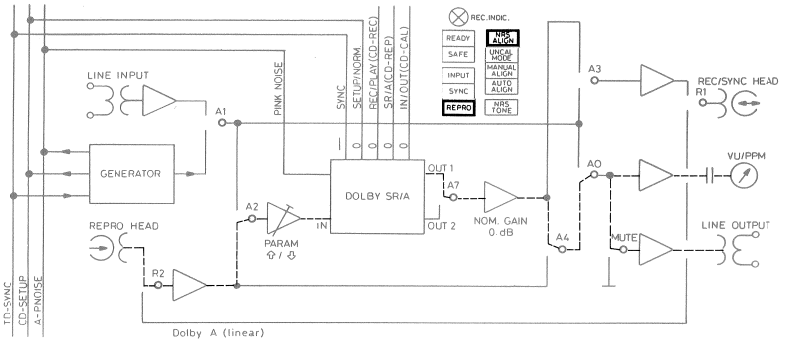

Dolby A (linear)

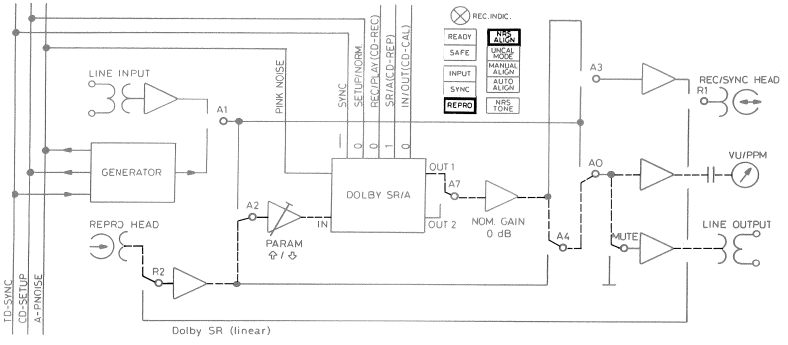

Dolby SR (linear)

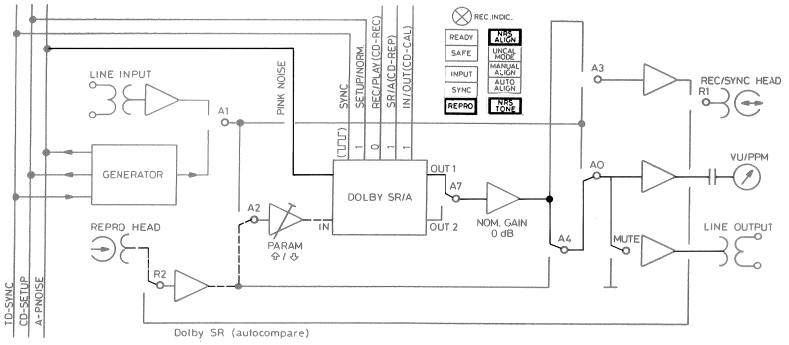

Dolby SR (autocompare)

⓪ 13.10.1988 DUB			
	ALIGNMENT MODE / AUTOCOMPARE SR		PAGE 4 OF 4
STUDER	OPTION SR/A		A 820 MCH

MP UNIT AUDIO CONTROL 1.820.782.20

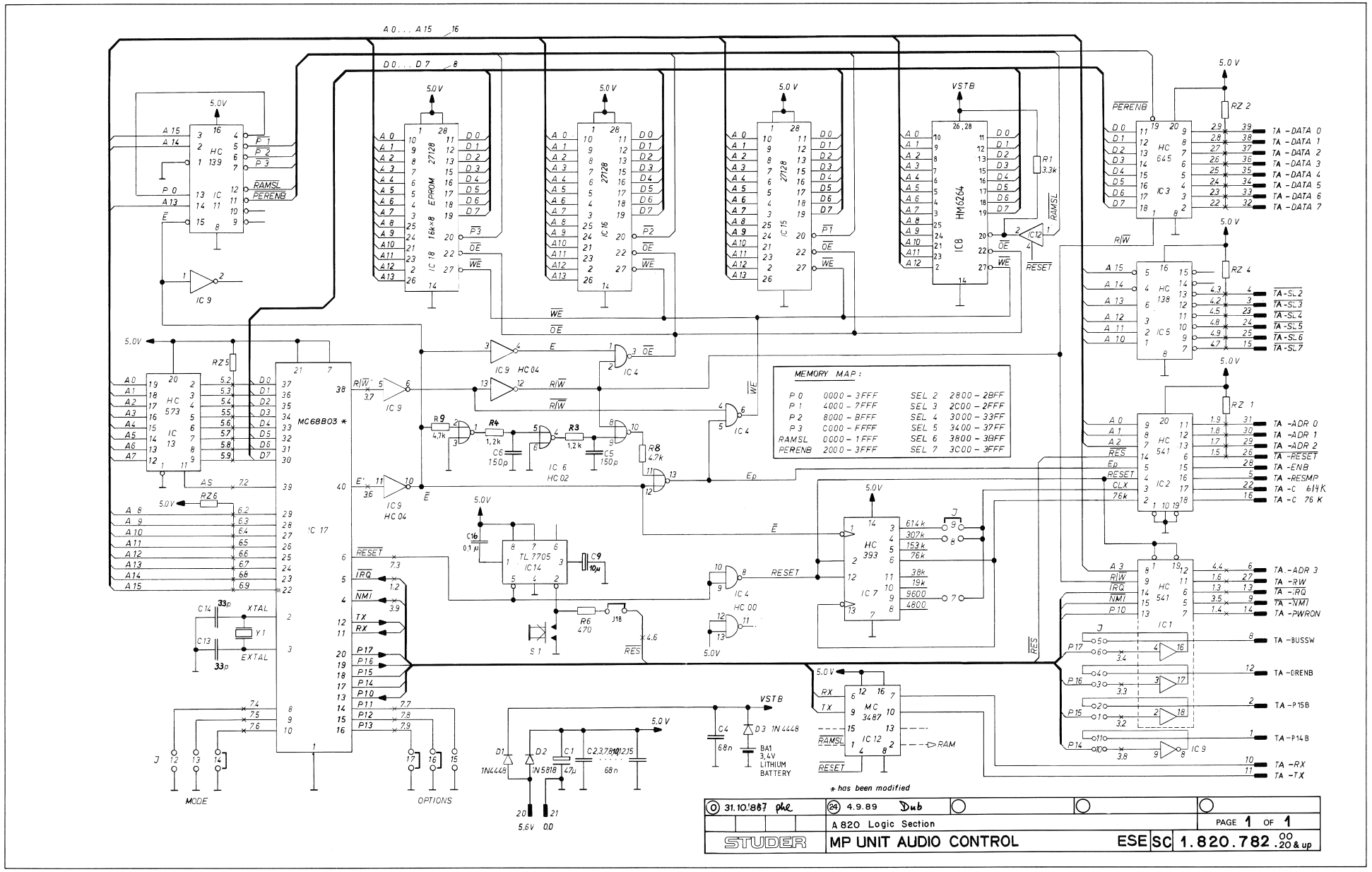

MP UNIT AUDIO CONTROL 1.820.782.20

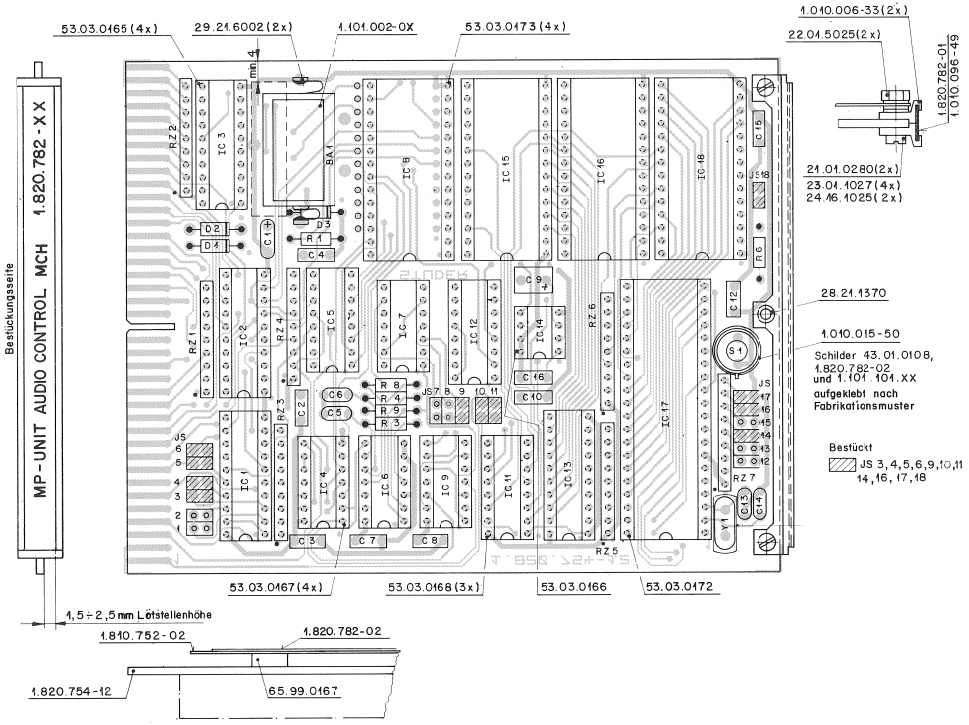

IND.	POS.NO.	PART NO.	VALUE	SPECIFICATIONS / EQUIVALENT	MANUF.
	BA....1	89.01.0275		Batt, Lith., 3.6V, D 14.7x25.5	
	C.....1	59.26.0470	47 uF	20%, 6.3V , Sal	Ph
	C.....2	59.06.0683	68 nF	10%, 63V , PETP	
	C.....3	59.06.0683	68 nF	10%, 63V , PETP	
	C.....4	59.06.0683	68 nF	10%, 63V , PETP	
	C.....5	59.34.7151	150 pF	2%, C=	
	C.....6	59.34.7151	150 pF	2%, C=	
	C.....7	59.06.0683	68 nF	10%, 63V , PETP	
	C.....8	59.06.0683	68 nF	10%, 63V , PETP	
	C.....9	59.26.2100	10 uF	20%, 16V , Sal	
	C.....10	59.06.0683	68 nF	10%, 63V , PETP	
	C.....11		not used		
	C.....12	59.06.0683	68 nF	10%, 63V , PETP	
	C.....13	59.34.2330	33 pF	5%, C=	
	C.....14	59.34.2330	33 pF	5%, C=	
	C.....15	59.06.0683	68 nF	10%, 63V , PETP	
	C.....16	59.06.0104	100 nF	10%, 63V , PETP	
	D.....1	50.04.0125	1N 4448		Fc,ITT,Ph,Sea,Tf
	D.....2	50.04.0512	1N 5818	1N 5819	Mot
	D.....3	50.04.0125	1N 4448		Fc,ITT,Ph,Sea,Tf
	IC....1	50.17.1541	74 HC 541		Mot,NS,Ph,RCA,SGS,TI,To
	IC....2	50.17.1541	74 HC 541		Mot,NS,Ph,RCA,SGS,TI,To
	IC....3	50.17.1645	74 HC 645		Mot,NS,Ph,RCA,SGS,TI,To
	IC....4	50.17.1000	74 HC 00		Mot,NS,Ph,RCA,SGS,TI,To
	IC....5	50.17.1138	74 HC 138		Mot,NS,Ph,RCA,SGS,TI,To
	IC....6	50.17.1002	74 HC 02		Mot,NS,Ph,RCA,SGS,TI,To
	IC....7	50.17.1393	74 HC 393		Mot,NS,Ph,RCA,SGS,TI,To
	IC....8	50.14.0133	HM6264P-15	TC 5564-15	Hi,To
	IC....9	50.17.0004	74 HCT 04		Mot,NS,Ph,RCA,SGS,TI,To
	IC...10		not used		
	IC...11	50.17.1139	74 HC 139		Mot,NS,Ph,RCA,SGS,TI,To
	IC...12	50.15.0105	MC 3487 P	DS 3487 N	Mot,NS
	IC...13	50.17.1573	74 HC 573		Mot,NS,Ph,RCA,SGS,TI,To
	IC...14	50.11.0122	TL7705ACP		TI

IND.	POS.NO.	PART NO.	VALUE	SPECIFICATIONS / EQUIVALENT	MANUF.
	JS...17			see note 2	
	JS...18			see note 2	
	MP....1	29.21.6002			
	MP....2	29.21.6002			
	R.....1	57.11.4332	3.3 kOhm	2%	
	R.....2		not used		
	R.....3	57.11.4122	1.2 kOhm	2%	
	R.....4	57.11.4122	1.2 kOhm	2%	
	R.....5		not used		
	R.....6	57.11.4471	470 Ohm	2%	
	R.....7		not used		
	R.....8	57.11.4472	4.7 kOhm	2%	
	R.....9	57.11.4472	4.7 kOhm	2%	
	RZ....1	57.88.4332		see note 3	
	RZ....2	57.88.4332		see note 3	
	RZ....3	57.88.4332		see note 3	
	RZ....4	57.88.4332		see note 3	
	RZ....5	57.88.4332		see note 3	
	RZ....6	57.88.4332		see note 3	
	RZ....7	57.88.4332		see note 3	
	S.....1	55.03.0122		Chicago Switch 34-53G-001	
	Y.....1	89.01.0560		4.9152 MHz, +-100 ppm	

IND.	POS.NO.	PART NO.	VALUE	SPECIFICATIONS / EQUIVALENT	MANUF.

(20) 10.06.88 Software 22/88

(21) 16.06.88 Software 24/88

(22) 31.08.88 Software 35/88

(23) 15.03.89 Software 20/89

(24) 04.09.89 Software 36/89

Note 1 - IC15/16/18 : Software is delivered in a set only.

Note 2 - Contact pin:

	Studer	Nr. 54.01.0020	
	Berg	Nr. 75 160-102-36	
	Philips	Nr. 2422 025 89303	
Bridge:	Studer	Nr. 54.01.0021	
	Berg	Nr. 65 474-001	
	Philips	Nr. 2422 024 88003	

Note 3 - Network: 8 x 3.3 kOhm, 5%
Sicovand Nr. C09 x 3.3 k J
Ineltro Nr. R88 3.3 k 5%

Ce=Ceramic, Sal=Solid Aluminium, PETP=Polyesterfilm.

MANUFACTURER: Fc=Fairchild, Hi=Hitachi, ITT=Intermetall, Mot=Motorola, NS=National Semiconductors, OK=OKI, Ph=Philips, Sea=Seeconea, TF=Telefunken/TI=Texas Instruments.

ORIG 86/10/31 (20) 88/06/10 (21) 88/06/16 (22) 88/08/31 (23) 89/03/15
(24) 89/09/04

IND.	POS.NO.	PART NO.	VALUE	SPECIFICATIONS / EQUIVALENT	MANUF.
(00)	IC...15	50.14.0125	27128	HN 48271286-30	Hi,It
(20)	IC...15	1.820.987.20		Software 22/88	St
(21)	IC...15	1.820.987.21		Software 24/88	St
(22)	IC...15	1.820.987.22		Software 35/88	St
(23)	IC...15	1.820.987.23		Software 20/89	St
(24)	IC...15	1.820.987.24		Software 36/89	St
(00)	IC...16	50.14.0125	27128	HN 48271286-30	Hi,It
(20)	IC...16	1.820.987.20		Software 22/88	St
(21)	IC...16	1.820.987.21		Software 24/88	St
(22)	IC...16	1.820.987.22		Software 35/88	St
(23)	IC...16	1.820.987.23		Software 20/89	St
(24)	IC...16	1.820.987.24		Software 36/89	St
(00)	IC...17	50.16.0107	MC6803P-1	6803P-L	Mot,Hi
(24)	IC...17	50.16.0130	MC68B03P	MC68B03S	Mot
(00)	IC...18	50.14.0125	27128	HN 48271286-30	Hi,It
(20)	IC...18	1.820.987.20		Software 22/88	St
(21)	IC...18	1.820.987.21		Software 24/88	St
(22)	IC...18	1.820.987.22		Software 35/88	St
(23)	IC...18	1.820.987.23		Software 20/89	St
(24)	IC...18	1.820.987.24		Software 36/89	St
	JS....1			see note 2	
	JS....2			see note 2	
	JS....3			see note 2	
	JS....4			see note 2	
	JS....5			see note 2	
	JS....6			see note 2	
	JS....7			see note 2	
	JS....8			see note 2	
	JS....9			see note 2	
	JS...10			see note 2	
	JS...11			see note 2	
	JS...12			see note 2	
	JS...13			see note 2	
	JS...14			see note 2	
	JS...15			see note 2	
	JS...16			see note 2	

BLOCK DIAGRAM
COMMUNICATIONS CONTROLLER 1.820.718

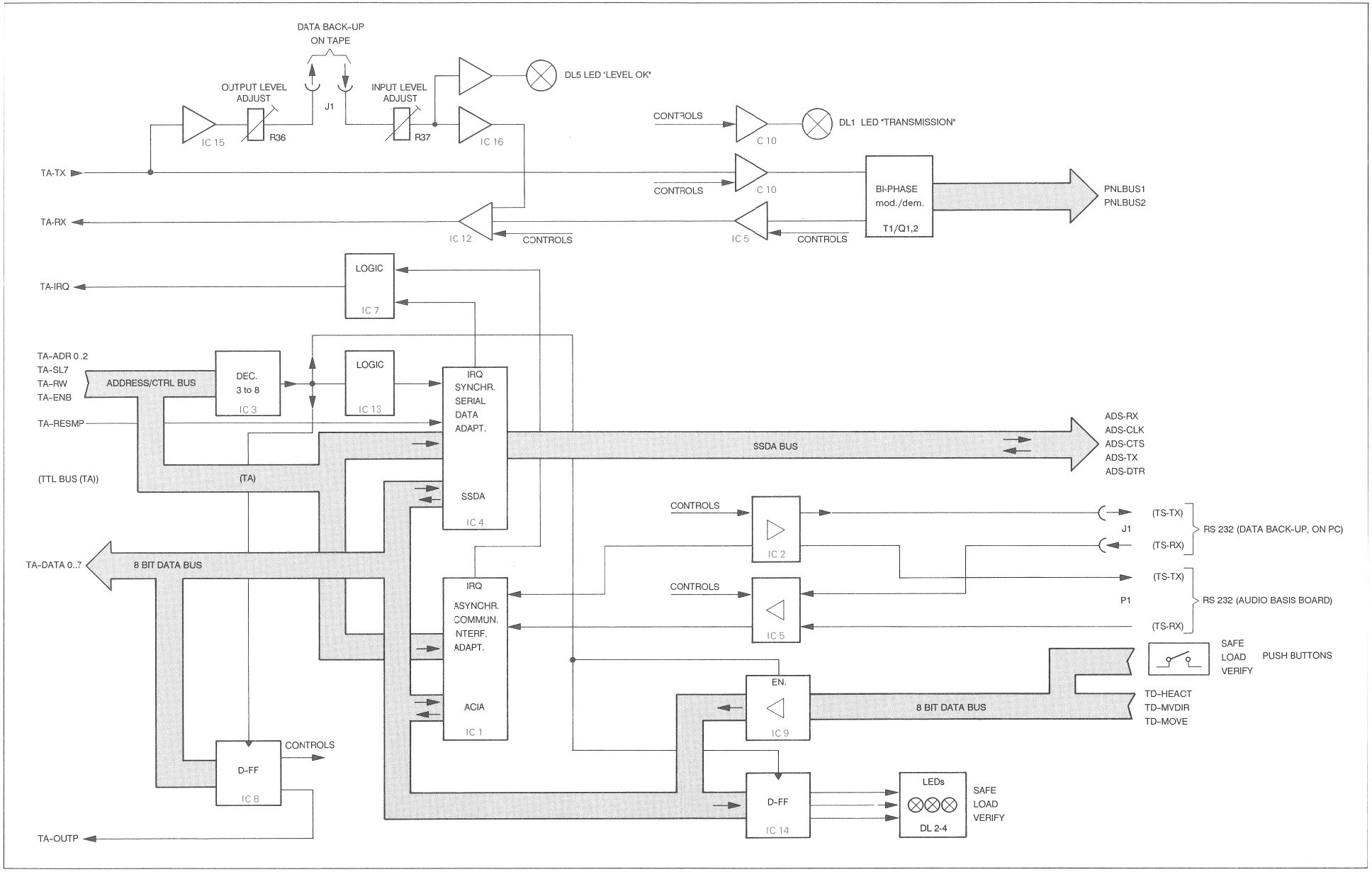

COMMUNICATIONS CONTROLLER 1.820.718.00

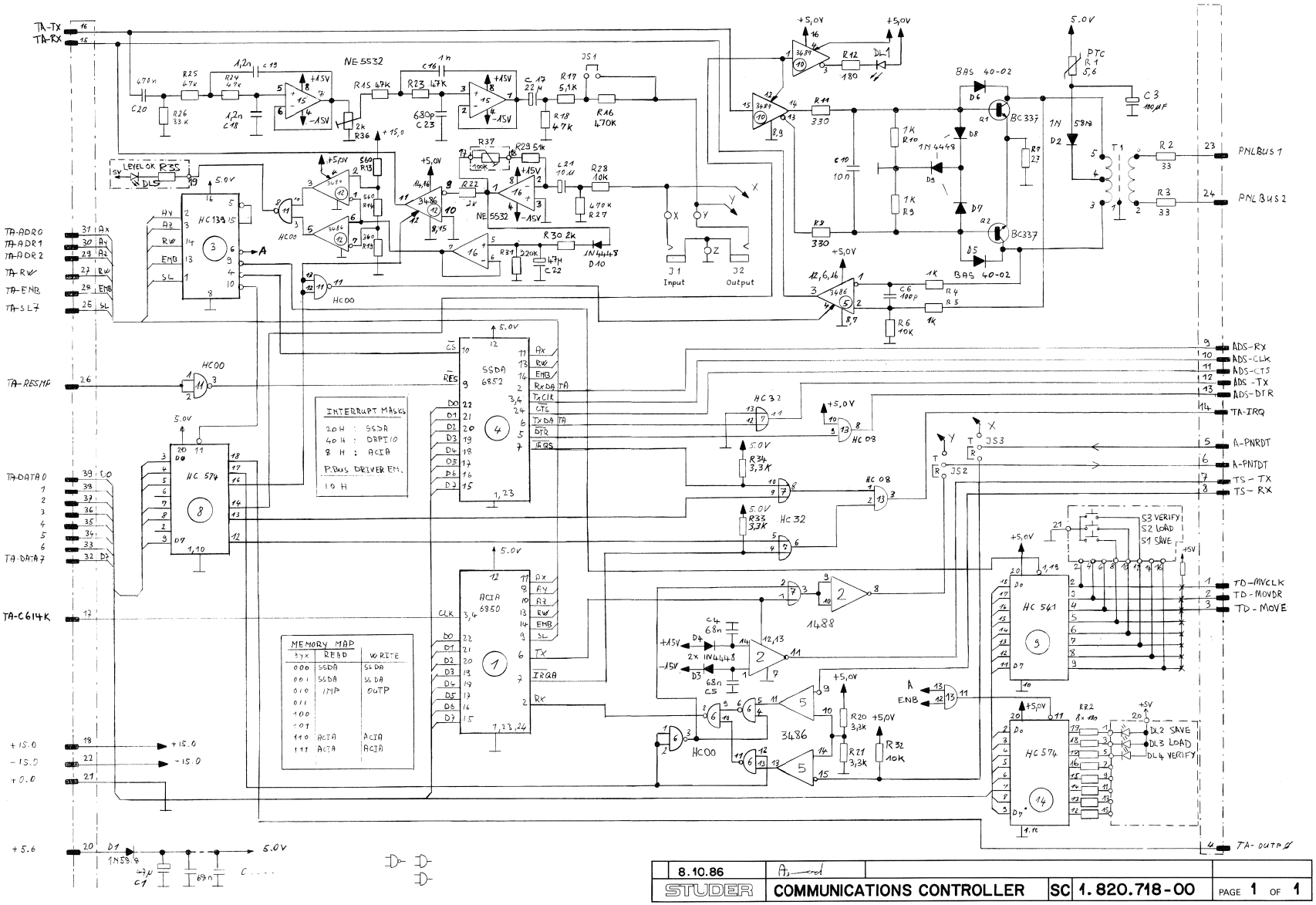

8.10.86				
STUDER	COMMUNICATIONS CONTROLLER	SC	1.820.718-00	PAGE 1 OF 1

COMMUNICATIONS CONTROLLER 1.820.718.00

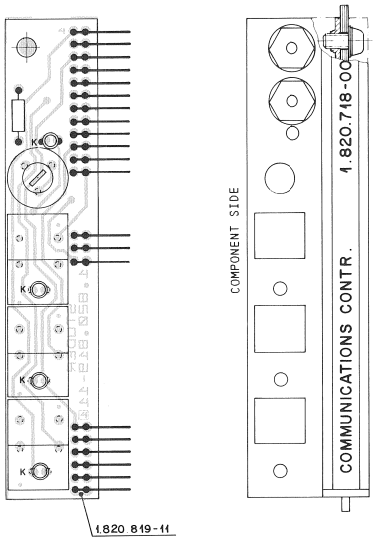

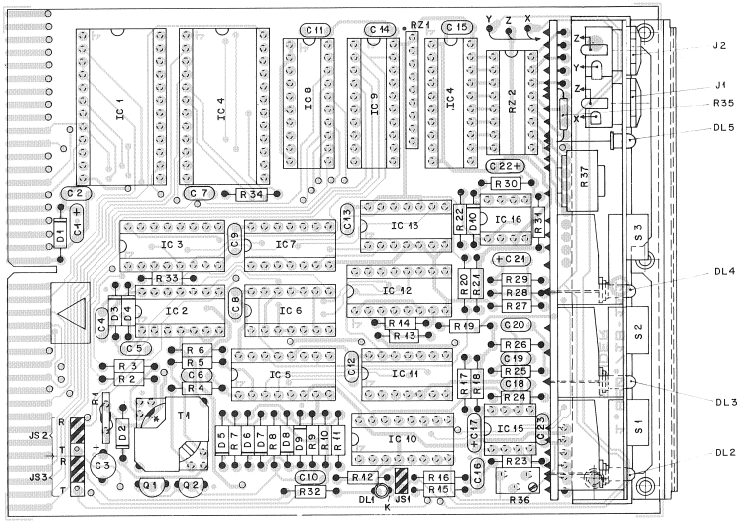

DL1÷5

K = Kathode

T1 * YELLOW DOT

INSERTED:

IND.	POS.NO.	PART NO.	VALUE	SPECIFICATIONS / EQUIVALENT	MANUF.
	RZ....2	57.88.3151		see note 5	
	T.....1	1.022.223.00		Studio Bus Transformer	St

IND.	POS.NO.	PART NO.	VALUE	SPECIFICATIONS / EQUIVALENT	MANUF.
Note 1 - contact pins:				Studer nr.	54.01.0020
				Berg nr.	75 160-102-36
				Philips nr.	2422 025 89303
bridge:				Studer nr.	54.01.0021
				Berg nr.	65 474-001
				Philips nr.	2422 024 88003
Note 2 - Potentiometer, 2 kOhm, 10%:				Bourns nr.	3296 Y - 1 - 202
				Spectrol nr.	64 Y 202 T 000
				Murata nr.	PDT 3105 Y - 1 - 202
				Comtelec nr.	103 WZ 202
Note 3 - Push Button switch:				Schadow serie	SERU
Button:				Studer nr.	55.15.0510
				Schadow serie	SRHKL
Note 4 - Network 8 * 3.3 kOhm, 5%, single line:				A. Bradley nr.	909 A 332
				Beckmann nr.	L - 09 - 1 - R 3.3 k
				Bourns nr.	4609 M - 101 - 332
				Dale nr.	CSC 09 A 01 - 332 G
				Sprague nr.	256 C J 332 X2 PD
				Tama nr.	MRG C 09 X 3.3 kOhm G
				Vitrom nr.	F9E 3.3 kOhm 2%
Note 5 - Network 8 * 150 Ohm, 5%, DIL 16:				A. Bradley nr.	316 B 151
				Beckmann nr.	898 - 3 - R 150 F
				Bourns nr.	4116 R-001 - 151
				Dale nr.	MDP 1603 - 151 G
				Sprague nr.	916 C 151 X2 SR
				TRW nr.	1999 - 01 - 1500 - G

IND.	POS.NO.	PART NO.	VALUE	SPECIFICATIONS / EQUIVALENT	MANUF.
	C.....1	59.26.0470	47 uF	20%, 6.3V	
	C.....2	59.06.0683	68 nF	10%	
	C.....3	59.22.3101	100 uF	20%, 16V	
	C.....4	59.06.0683	68 nF	10%	
	C.....5	59.06.0683	68 nF	10%	
	C.....6	59.34.6101	100 pF	5%	
	C.....7	59.06.0683	68 nF	10%	
	C.....8	59.06.0683	68 nF	10%	
	C.....9	59.06.0683	68 nF	10%	
	C.....10	59.06.0103	100 nF	10%	
	C.....11	59.06.0683	68 nF	10%	
	C.....12	59.06.0683	68 nF	10%	
	C.....13	59.06.0683	68 nF	10%	
	C.....14	59.06.0683	68 nF	10%	
	C.....15	59.06.0683	68 nF	10%	
	C.....16	59.06.0102	1 nF	10%	
	C.....17	59.26.1220	22 uF	20%, 10V	
	C.....18	59.06.0153	15 nF	10%	
	C.....19	59.06.0153	15 nF	10%	
	C.....20	59.06.0474	470 nF	10%	
	C.....21	59.26.2100	10 uF	20%, 10V	
	C.....22	59.26.1479	4.7 uF	20%, 10V	
	C.....23	59.32.2681	680 pF	10%	
	D.....1	50.04.0512	1N 5818		Mot
	D.....2	50.04.0512	1N 5818	1N 5819	Mot
	D.....3	50.04.0125	1N 4448		Fc,ITT,Ph,Sos,TF
	D.....4	50.04.0125	1N 4448		Fc,ITT,Ph,Sos,TF
	D.....5	50.04.0127	BAT 42	BAT 85, 1AS 40-02	Ph,Sie,Tho
	D.....6	50.04.0127	BAT 42	BAT 85, 1AS 40-02	Ph,Sie,Tho
	D.....7	50.04.0125	1N 4448		Fc,ITT,Ph,Sos,TF
	D.....8	50.04.0125	1N 4448		Fc,ITT,Ph,Sos,TF
	D.....9	50.04.0125	1N 4448		Fc,ITT,Ph,Sos,TF
	D.....10	50.04.0125	1N 4448		Fc,ITT,Ph,Sos,TF
	DL....1	50.04.2129	LS3160-HL	Q 62703 - Q 1304	Sie
	DL....2	50.04.2130	LY3160-GK	Q 62703 - Q 1308	Sie

IND.	POS.NO.	PART NO.	VALUE	SPECIFICATIONS / EQUIVALENT	MANUF.
	DL....3	50.04.2130	LY3160-GK	Q 62703 - Q 1308	Sie
	DL....4	50.04.2130	LY3160-GK	Q 62703 - Q 1308	Sie
	DL....5	50.04.2130	LY3160-GK	Q 62703 - Q 1308	Sie
	IC....1	50.16.0101	MC 68A50 P	S 68A50	AMI,Mot
	IC....2	50.15.0106	MC 1488 P		Mot
	IC....3	50.11.1139	74 HC 139	.. 74 HC 139 ..	Ph,Mot,NS,RCA,To+TI,SGS
	IC....4	50.16.0114	MC 68A52 P	HD 68A52 P, S 68A52 P	AMI,Hi,Mot
	IC....5	50.15.0104	MC 3486 P	DS 3486 N	Mot,NS
	IC....6	50.11.1000	74 HC 00	.. 74 HC 00 ..	Ph,Mot,NS,RCA,To+TI,SGS
	IC....7	50.11.1032	74 HC 32	.. 74 HC 32 ..	Ph,Mot,NS,RCA,To+TI,SGS
	IC....8	50.11.1574	74 HC 574	.. 74 HC 574 ..	Ph,Mot,NS,RCA,To+TI,SGS
	IC....9	50.11.1541	74 HC 541	.. 74 HC 541 ..	Ph,Mot,NS,RCA,To+TI,SGS
	IC....10	50.15.0105	MC 3487 P	DS 3487 N	Mot,NS
	IC....11	50.11.1000	74 HC 00	.. 74 HC 00 ..	Ph,Mot,NS,RCA,To+TI,SGS
	IC....12	50.15.0104	MC 3486 P	DS 3486 N	Mot,NS
	IC....13	50.11.1008	74 HC 08	.. 74 HC 08 ..	Ph,Mot,NS,RCA,To+TI,SGS
	IC....14	50.11.1574	74 HC 574	.. 74 HC 574 ..	Ph,Mot,NS,RCA,To+TI,SGS
	IC....15	50.09.0106	NE 5532 AN	XR 5532 AN, RC 5532 ANB	Ex,Ra,Sig
	IC....16	50.09.0106	NE 5532 AN	XR 5532 AN, RC 5532 ANB	Ex,Ra,Sig
	J.....1	54.02.0106		3.6 mm Jack socket, Rendar nr. R 32 408	
	J.....2	54.02.0106		3.6 mm Jack socket, Rendar nr. R 32 408	
	JS....1			see note 1	
	JS....2			see note 1	
	JS....3			see note 1	
	Q.....1	50.01.0340	BC 337-25		ITT,Ph,Sie
	Q.....2	50.01.0340	BC 337-25		ITT,Ph,Sie
	R.....1	57.95.0209	5.6 Ohm	PTC-Resistor, Philips nr. 2322 662 91005	
	R.....2	57.11.4330	33 Ohm	2%	
	R.....3	57.11.4330	33 Ohm	2%	
	R.....4	57.11.4102	1 kOhm	2%	
	R.....5	57.11.4102	1 kOhm	2%	
	R.....6	57.11.4103	10 kOhm	2%	

IND.	POS.NO.	PART NO.	VALUE	SPECIFICATIONS / EQUIVALENT	MANUF.
	R.....7	57.11.4270	27 Ohm	2%	
	R.....8	57.11.4331	330 Ohm	2%	
	R.....9	57.11.4102	1 kOhm	2%	
	R.....10	57.11.4102	1 kOhm	2%	
	R.....11	57.11.4331	330 Ohm	2%	
	R.....12	57.11.4181	180 Ohm	2%	
	R.....13	57.11.4561	560 Ohm	2%	
	R.....14	57.11.4561	560 Ohm	2%	
	R.....15	57.11.4473	47 kOhm	2%	
	R.....16	57.11.4474	470 kOhm	2%	
	R.....17	57.11.3512	5.1 kOhm	2%	
	R.....18	57.11.4473	47 kOhm	2%	
	R.....19	57.11.4361	360 Ohm	2%	
	R.....20	57.11.4332	3.3 kOhm	2%	
	R.....21	57.11.4332	3.3 kOhm	2%	
	R.....22	57.11.3102	2 kOhm	1%	
	R.....23	57.11.4473	47 kOhm	2%	
	R.....24	57.11.4473	47 kOhm	2%	
	R.....25	57.11.4473	47 kOhm	2%	
	R.....26	57.11.4333	33 kOhm	2%	
	R.....27	57.11.4474	470 kOhm	2%	
	R.....28	57.11.4103	10 kOhm	2%	
	R.....29	57.11.3513	51 kOhm	1%	
	R.....30	57.11.3202	2 kOhm	1%	
	R.....31	57.11.4224	220 kOhm	2%	
	R.....32	57.11.4103	10 kOhm	2%	
	R.....33	57.11.4332	3.3 kOhm	2%	
	R.....34	57.11.4332	3.3 kOhm	2%	
	R.....35	57.11.4181	180 Ohm	2%	
	R.....36	58.09.1202		see note 2	
	R.....37	58.01.4104	100 kOhm	10%, A. Bradley nr. YR 104 A	
	S.....1	55.15.0501		see note 3	
	S.....2	55.15.0501		see note 3	
	S.....3	55.15.0501		see note 3	
	RZ....1	57.88.4132		see note 4	

IND.	POS.NO.	PART NO.	VALUE	SPECIFICATIONS / EQUIVALENT	MANUF.
MANUFACTURER: AMI=American Microsystem Inc., Ex=Exar, Fc=Fairchild, Hi=Hitachi, ITT=Internetall, Mot=Motorola, NS=National Semiconductors, Ph=Philips, Ra=Raytheon, RCA=RCA Corp. of America, Sos=Sescosem, SGS=SGS/Ates, Sie=Siemens, Sig=Signetics, St=Studer, Tf=Telefunken, Tho=Thomson CSF, TI=Texas Instruments, To=Toshiba.					

ORIG 86/10/08

COMMUNICATIONS CONTROLLER 1.820.718.81

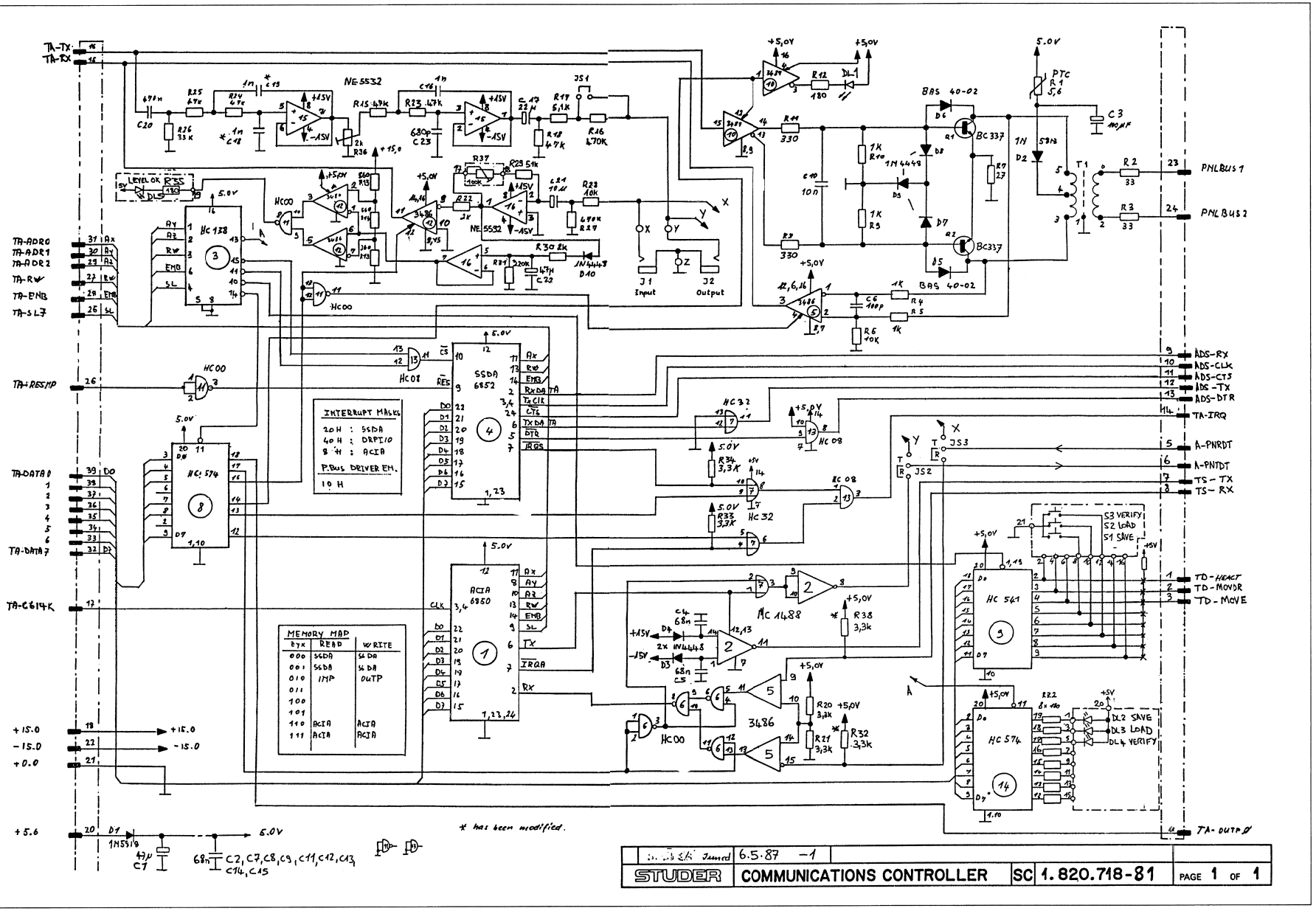

COMMUNICATIONS CONTROLLER 1.820.718.81

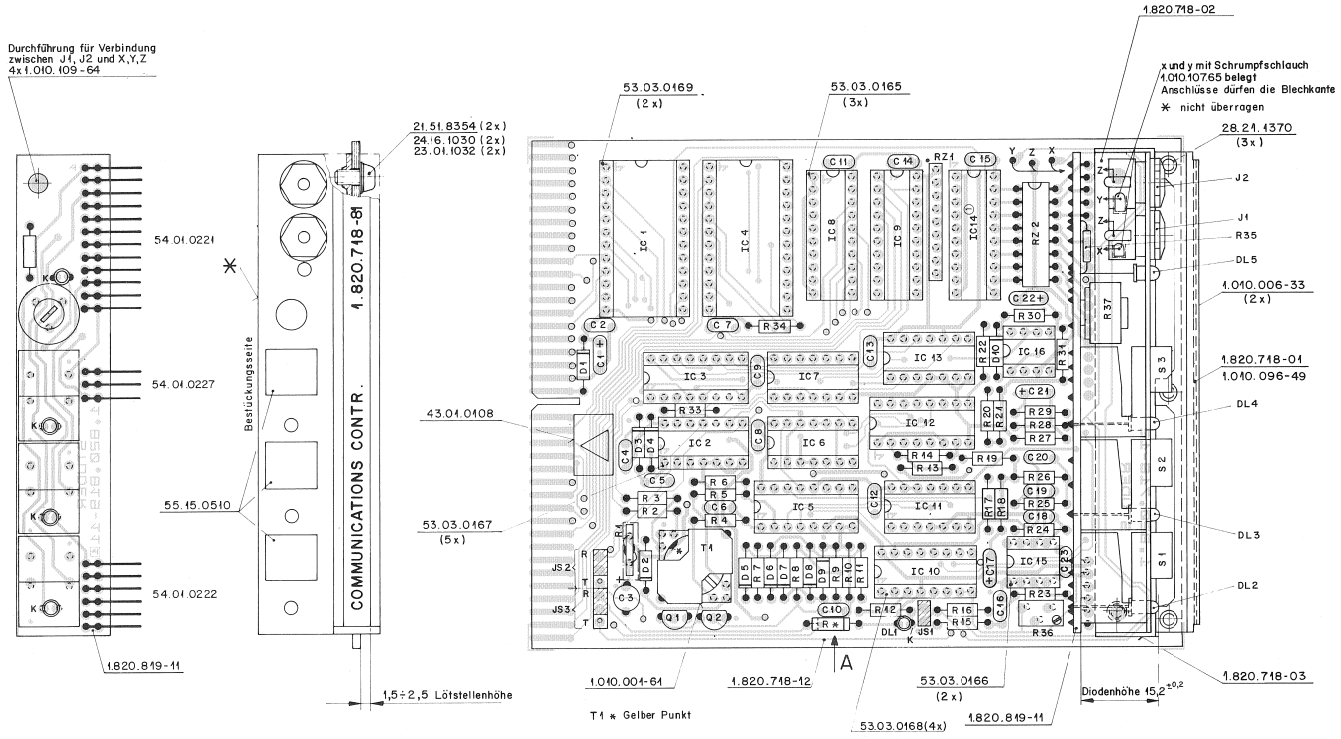

IND.	POS.NO.	PART NO.	VALUE	SPECIFICATIONS / EQUIVALENT	MANUF.
	BZ....1	57.88.4332		see note 4	
	BZ....2	57.88.3151		see note 5	
	T.....1	1.022.223.00		Studio Bus Transformer	St

(01) 06.05.87 Additonal pull-up resistor

Note 1 - contact pins: Studer nr. 54.01.0020; Berg nr. 75 160-102-36; Philips nr. 2422 025 89303
bridge: Studer nr. 54.01.0021; Berg nr. 65 474-001; Philips nr. 2422 024 88003

Note 2 - Potentiometer, 2 kOhm: Bourns nr. 3296 Y - 1 - 202; Spectrol nr. 64 Y 202 T 000; Murata nr. PDT 3105 Y - 1 - 202; Contelec nr. 183 WZ 202

Note 3 - Push Button switch: Schadow serie SERU; Studer nr. 55.15.0510
Button: Schadow serie SBNKL

Note 4 - Network 8 * 3.3 kOhm, 5%, single line: A. Bradley nr. 909 A 332; Beckmann nr. L - 09 - 1 - R 3.3 k; Bourns nr. 4609 M - 101 - 332; Dale nr. CSC 09 A 01 - 332 G; Sprague nr. 256 C J 332 X2 P9; Tama nr. MRS C 09 X 3.3 kOhm G; Vitros nr. F9E 3.3 kOhm 2%

Note 5 - Network 8 * 150 Ohm, 5%, DIL 16: A. Bradley nr. 316 B 151; Beckmann nr. 898 - 3 - R 150 F; Bourns nr. 4116 R-001 - 151; Dale nr. MDP 1603 - 151 G; Sprague nr. 916 C 151 X2 S8; TRW nr. 1999 - 01 - 1500 - G

IND.	POS.NO.	PART NO.	VALUE	SPECIFICATIONS / EQUIVALENT	MANUF.
	C....1	59.26.0470	47 uF	20%, 6.3V	
	C....2	59.06.0683	68 nF	10%	
	C....3	59.22.3101	100 uF	20%, 16V	
	C....4	59.06.0683	68 nF	10%	
	C....5	59.06.0683	68 nF	10%	
	C....6	59.34.4101	100 pF	5%	
	C....7	59.06.0683	68 nF	10%	
	C....8	59.06.0683	68 nF	10%	
	C....9	59.06.0683	68 nF	10%	
	C....10	59.06.0103	10 nF	10%	
	C....11	59.06.0683	68 nF	10%	
	C....12	59.06.0683	68 nF	10%	
	C....13	59.06.0683	68 nF	10%	
	C....14	59.06.0683	68 nF	10%	
	C....15	59.06.0683	68 nF	10%	
	C....16	59.06.0102	1 nF	10%	
	C....17	59.26.1220	22 uF	20%, 16V	
	C....18	59.06.5102	1 nF	5%	
	C....19	59.06.5102	1 nF	5%	
	C....20	59.06.0474	470 nF	10%	
	C....21	59.26.2100	10 uF	20%, 16V	
	C....22	59.26.1479	4.7 uF	20%, 16V	
	C....23	59.32.2681	680 pF	10%	
	D....1	50.04.0512	1N 5818	1N 5819	Mot
	D....2	50.04.0512	1N 5818	1N 5819	Mot
	D....3	50.04.0125	1N 4448		Fe/ITT,Ph/Sea/Tf
	D....4	50.04.0125	1N 4448		Fe/ITT,Ph/Sea/Tf
	D....5	50.04.0127	BAT 42	BAT 85, BAS 40-02	Ph/Sie/Tho
	D....6	50.04.0127	BAT 42	BAT 85, BAS 40-02	Ph/Sie/Tho
	D....7	50.04.0125	1N 4448		Fe/ITT,Ph/Sea/Tf
	D....8	50.04.0125	1N 4448		Fe/ITT,Ph/Sea/Tf
	D....9	50.04.0125	1N 4448		Fe/ITT,Ph/Sea/Tf
	D....10	50.04.0125	1N 4448		Fe/ITT,Ph/Sea/Tf
	DL....1	50.04.2129	LS3160-HL	Q 62703 - Q 1304	Sie
	DL....2	50.04.2130	LY3160-6K	Q 62703 - Q 1308	Sie

IND.	POS.NO.	PART NO.	VALUE	SPECIFICATIONS / EQUIVALENT	MANUF.
	DL....3	50.34.2130	LY3160-6K	Q 62703 - Q 1308	Sie
	DL....4	50.34.2130	LY3160-6K	Q 62703 - Q 1308	Sie
	DL....5	50.34.2130	LY3160-6K	Q 62703 - Q 1308	Sie
	IC....1	50.16.0101	MC 68A50 P	S 68A50	AMI,Mot
	IC....2	50.15.0106	MC 1488 P		Mot
	IC....3	50.17.1138	74 HC 138	.. 74 HC 138	Ph/Mot/NS/RCA/Te/TI/SGS
	IC....4	50.16.0114	MC 68A52 P	HD 68A52 P/ S 68A52 P	AMI/Ph/Mot
	IC....5	50.15.0104	MC 3486 P	DS 3486 N	Mot/NS
	IC....6	50.17.1000	74 HC 00	.. 74 HC 00 ..	Ph/Mot/NS/RCA/Te/TI/SGS
	IC....7	50.17.1032	74 HC 32	.. 74 HC 32 ..	Ph/Mot/NS/RCA/Te/TI/SGS
	IC....8	50.17.1574	74 HC 574	.. 74 HC 574 ..	Ph/Mot/NS/RCA/Te/TI/SGS
	IC....9	50.17.1541	74 HC 541	.. 74 HC 541 ..	Ph/Mot/NS/RCA/Te/TI/SGS
	IC....10	50.15.0105	MC 3487 P	DS 3487 N	Mot/NS
	IC....11	50.17.1000	74 HC 00	.. 74 HC 00 ..	Ph/Mot/NS/RCA/Te/TI/SGS
	IC....12	50.15.0104	MC 3486 P	DS 3486 N	Mot/NS
	IC....13	50.17.1008	74 HC 08	.. 74 HC 08 ..	Ph/Mot/NS/RCA/Te/TI/SGS
	IC....14	50.17.1574	74 HC 574	.. 74 HC 574 ..	Ph/Mot/NS/RCA/Te/TI/SGS
	IC....15	50.29.0106	NE 5532 AN	NE 5532 AN, RC 5532 ANB	Ex/Ra/Sig
	IC....16	50.29.0106	NE 5532 AN	NE 5532 AN, RC 5532 ANB	Ex/Ra/Sig
	J.....1	54.32.0106		3.6 mm Jack socket, Rendar nr. R 32 408	
	J.....2	54.32.0106		3.6 mm Jack socket, Rendar nr. R 32 408	
	JS....1			see note 1	
	JS....2			see note 1	
	JS....3			see note 1	
	Q.....1	50.03.0340	BC 337-25		ITT,Ph,Sie
	Q.....2	50.03.0340	BC 337-25		ITT,Ph,Sie
	R.....1	57.99.0209	5.6 Ohm	PTC-Resistor, Philips nr. 2322 662 91005	
	R.....2	57.11.4330	33 Ohm	2%	
	R.....3	57.11.4330	33 Ohm	2%	
	R.....4	57.11.4102	1 kOhm	2%	
	R.....5	57.11.4102	1 kOhm	2%	
	R.....6	57.11.4103	10 kOhm	2%	

IND.	POS.NO.	PART NO.	VALUE	SPECIFICATIONS / EQUIVALENT	MANUF.
	R.....7	57.11.4270	27 Ohm	2%	
	R.....8	57.11.4331	330 Ohm	2%	
	R.....9	57.11.4102	1 kOhm	2%	
	R....10	57.11.4102	1 kOhm	2%	
	R....11	57.11.4331	330 Ohm	2%	
	R....12	57.11.4181	180 Ohm	2%	
	R....13	57.11.4561	560 Ohm	2%	
	R....14	57.11.4561	560 Ohm	2%	
	R....15	57.11.4173	47 kOhm	2%	
	R....16	57.11.4174	470 kOhm	2%	
	R....17	57.11.3512	5.1 kOhm	2%	
	R....18	57.11.4173	47 kOhm	2%	
	R....19	57.11.3361	360 Ohm	2%	
	R....20	57.11.4332	3.3 kOhm	2%	
	R....21	57.11.4332	3.3 kOhm	2%	
	R....22	57.11.3202	2 kOhm	1%	
	R....23	57.11.4173	47 kOhm	2%	
	R....24	57.11.4173	47 kOhm	2%	
	R....25	57.11.4173	47 kOhm	2%	
	R....26	57.11.4333	33 kOhm	2%	
	R....27	57.11.4174	470 kOhm	2%	
	R....28	57.11.4103	10 kOhm	2%	
	R....29	57.11.3513	51 kOhm	1%	
	R....30	57.11.3202	2 kOhm	1%	
	R....31	57.11.4224	220 kOhm	2%	
(00)	R....32	57.11.4103	10 kOhm	2%	
(01)	R....32	57.11.4332	3.3 kOhm	2%	
	R....33	57.11.4332	3.3 kOhm	2%	
	R....34	57.11.4332	3.3 kOhm	2%	
	R....35	57.11.4181	180 Ohm	2%	
	R....36	58.05.1202		see note 2	
	R....37	58.01.4104	100 kOhm	10%, A. Bradley nr. YR 104 A	
(01)	R....38	57.11.4332	3.3 kOhm	2%	
	S.....1	55.15.0501		see note 3	
	S.....2	55.15.0501		see note 3	
	S.....3	55.15.0501		see note 3	

IND.	POS.NO.	PART NO.	VALUE	SPECIFICATIONS / EQUIVALENT	MANUF.

MANUFACTURER: AMI=American Microsystem Inc., Ex=Exar, Fe=Fairchild, Hi=Hitachi, ITT=Intermetall, Mot=Motorola, NS=National Semiconductors, Ph=Philips, Ra=Raytheon, RCA=RCA Corp. of America, Sea=Seescosem, SGS=SGS/Ates, Sie=Siemens, Sig=Signetics, St=Studer, Te=Telefunken, Tho=Thomson CSF, TI=Texas Instruments, To=Toshiba.

ORIG 87/03/18 (01) 87/05/06

COMMUNICATIONS CONTROLLER 1.820.718.82

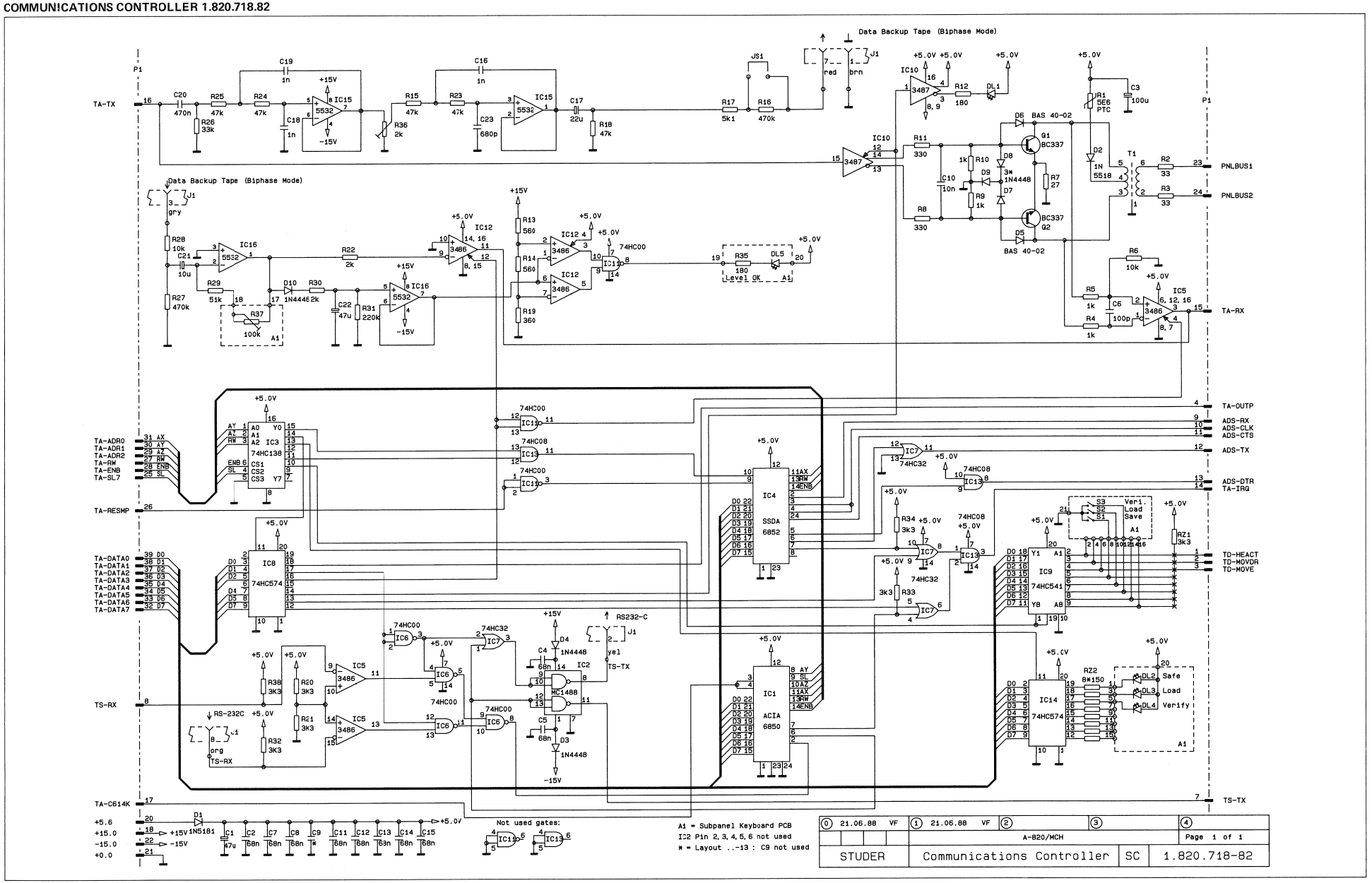

COMMUNICATIONS CONTROLLER 1.820.718.82

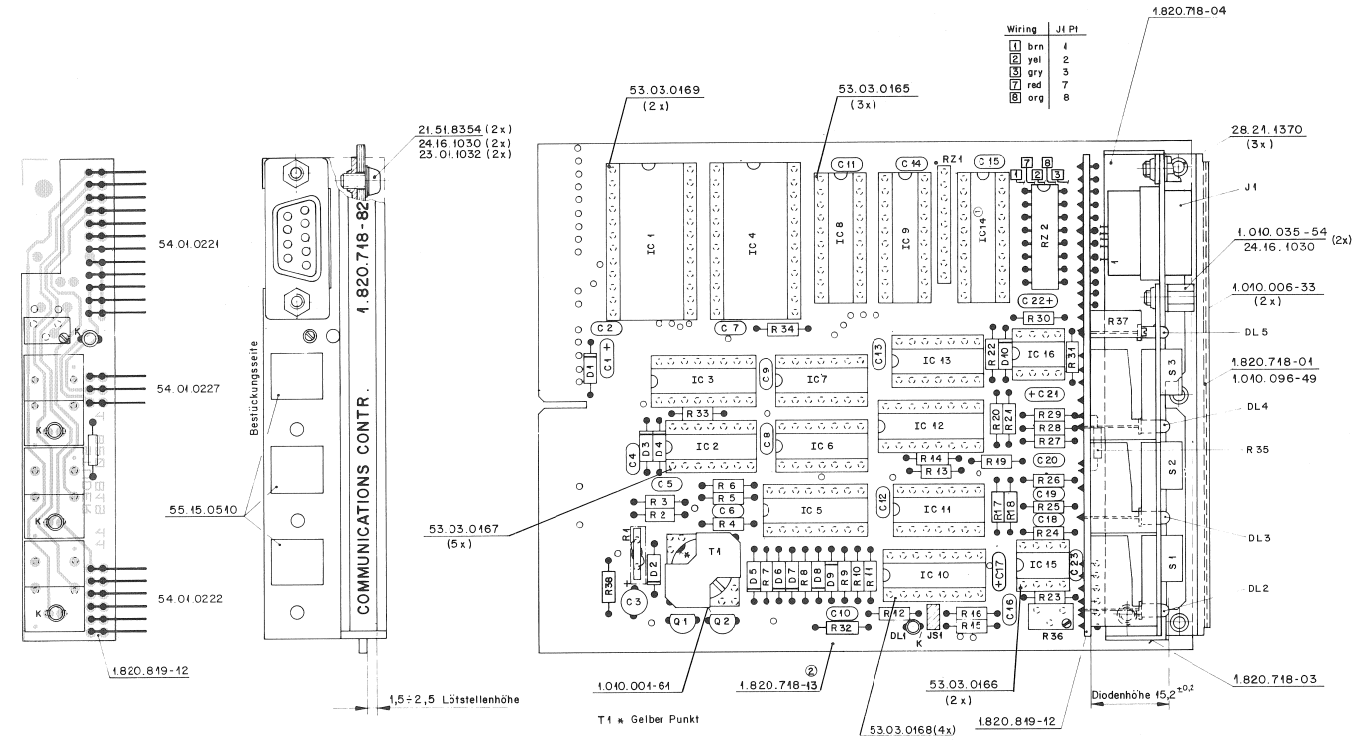

IND.	POS.NO.	PART NO.	VALUE	SPECIFICATIONS / EQUIVALENT	MANUF.
	RZ.....2	57.86.3151		see note 5	
	T.....1	1.022.223.00		Studio Bus Transformer	St

S T U D E R (00) 88/02/02 VF COMMUNICATIONS CONTROLLER PL 1.820.718.82 PAGE

IND.	POS.NO.	PART NO.	VALUE	SPECIFICATIONS / EQUIVALENT	MANUF.
	Note 1 - contact pins:			Studer nr. 54.01.0020	
				Herg nr. 75 160-102-36	
				Philips nr. 2422 025 89303	
	bridge:			Studer nr. 54.01.0021	
				Herg nr. 65 474-001	
				Philips nr. 2422 024 88003	
	Note 2 - Potentiometer, 2 kOhm:			Bourns nr. 3296 Y - 1 - 202	
				Spectrol nr. 64 Y 202 T 000	
				Murata nr. PDT 3105 Y - 1 - 202	
				Contelec nr. 193 WZ 202	
	Note 3 - Push button switch:			Schadow serie 3FKU	
	Button:			Studer nr. 54.15.0510	
				Schadow serie SPHKL	
	Note 4 - network 8 * 3,3 kOhm, 2%			single lined:	
				AA bradley nr. 989 A 332	
				Beckmann nr. 6 - 09 - 1 - R 3,3 k	
				Bourns nr. 4609 M - 101 - 332	
				Dale nr. CSC 09 A 01 - 332 G	
				Sprague nr. 256 C 2 332 X2 Pu	
				Tamu nr. NRG C 09 X 3,3 kOhm G	
				Vitrom nr. P9c 3,3 kOhm 2%	
	Note 5 - network 6 * 150 Ohm, 5%			DIL 16:	
				AA bradley nr. 316 B 151	
				Beckmann nr. 898 - 3 - R 150 F	
				Bourns nr. 4116 R-001 - 151	
				Dale nr. MDP 1603 - 151 G	
				Sprague nr. 91b C 151 X2 SK	
				TKM nr. 1999 - 01 - 1500 - G	

S T U D E R (00) 88/02/02 VF COMMUNICATIONS CONTROLLER PL 1.820.718.82 PAGE 5

IND.	POS.NO.	PART NO.	VALUE	SPECIFICATIONS / EQUIVALENT	MANUF.
	C.....1	59.26.0470	47 uF	20%, 6.3V	
	C.....2	59.06.0683	68 nF	10%	
	C.....3	59.22.3101	100 uF	20%, 16V	
	C.....4	59.06.0683	68 nF	10%	
	C.....5	59.06.0683	68 nF	10%	
	C.....6	59.34.4101	100 pF	5%	
	C.....7	59.06.0683	68 nF	10%	
	C.....8	59.06.0683	68 nF	10%	
	C.....9	59.06.0683	68 nF	10%	
	C.....10	59.06.0103	10 nF	10%	
	C.....11	59.06.0683	68 nF	10%	
	C.....12	59.06.0683	68 nF	10%	
	C.....13	59.06.0683	68 nF	10%	
	C.....14	59.06.0683	68 nF	10%	
	C.....15	59.06.0683	68 nF	10%	
	C.....16	59.06.0102	1 nF	10%	
	C.....17	59.26.1220	22 uF	20%, 16V	
	C.....18	59.06.5102	1 nF	5%	
	C.....19	59.06.5102	1 nF	5%	
	C.....20	59.06.0474	470 nF	10%	
	C.....21	59.26.2100	10 uF	20%, 16V	
	C.....22	59.26.1479	4.7 uF	20%, 16V	
	C.....23	59.32.2681	680 pF	10%	
	D.....1	50.04.0512	1N 5818	1N 5819 Mot	
	D.....2	50.04.0512	1N 5818	1N 5819 Mot	
	D.....3	50.04.0125	1N 4448	Fc:ITT,Phs,Ses,Tf	
	D.....4	50.04.0125	1N 4448	Fc:ITT,Phs,Ses,Tf	
	D.....5	50.04.0127	BAT 42	BAT 85, BAS 40-02 Phs,Sie,Tho	
	D.....6	50.04.0127	BAT 42	BAT 85, BAS 40-02 Phs,Sie,Tho	
	D.....7	50.04.0125	1N 4448	Fc:ITT,Phs,Ses,Tf	
	D.....8	50.04.0125	1N 4448	Fc:ITT,Phs,Ses,Tf	
	D.....9	50.04.0125	1N 4448	Fc:ITT,Phs,Ses,Tf	
	D.....10	50.04.0125	1N 4448	Fc:ITT,Phs,Ses,Tf	
	DL.....1	50.04.2129	LY3160-ML	Q 62703 - Q 1304 Sie	
	DL.....2	50.04.2130	LY3160-GK	Q 62703 - Q 1308 Sie	

S T U D E R (00) 88/02/02 VF COMMUNICATIONS CONTROLLER PL 1.820.718.82 PAGE 1

IND.	POS.NO.	PART NO.	VALUE	SPECIFICATIONS / EQUIVALENT	MANUF.
	DL.....3	50.04.2130	LY3160-GK	Q 62703 - Q 1308	Sie
	DL.....4	50.04.2130	LY3160-GK	Q 62703 - Q 1308	Sie
	DL.....5	50.04.2130	LY3160-GK	Q 62703 - Q 1308	Sie
	IC.....1	50.10.0101	MC 6850 P	S 6850	AMI,*Mot
	IC.....2	50.13.0106	MC 1488 P		*Mot
	IC.....3	50.17.1138	74 HC 138	** 74 HC 138 Phs,Mot,NS,RCA,ToxTI,SGS	
	IC.....4	50.10.0114	MC 6852 P	HU 6852 P, S 6852 P AMI,*Mot	
	IC.....5	50.13.0104	MC 3486 P	DS 3486 *1 Mot,NS	
	IC.....6	50.17.1020	74 HC 00	** 74 HC 00 ** Phs,Mot,NS,RCA,ToxTI,SGS	
	IC.....7	50.17.1032	74 HC 32	** 74 HC 32 ** Phs,Mot,NS,RCA,ToxTI,SGS	
	IC.....8	50.17.1574	74 HC 574	** 74 HC 574 ** Phs,Mot,NS,RCA,ToxTI,SGS	
	IC.....9	50.17.1541	74 HC 541	** 74 HC 541 ** Phs,Mot,NS,RCA,ToxTI,SGS	
	IC.....10	50.13.0105	MC 3487 P	DS 3487 *1 Mot,NS	
	IC.....11	50.17.1000	74 HC 00	** 74 HC 00 ** Phs,Mot,NS,RCA,ToxTI,SGS	
	IC.....12	50.13.0104	MC 3486 P	DS 3486 *1 Mot,NS	
	IC.....13	50.17.1004	74 HC 04	** 74 HC 04 ** Phs,Mot,NS,RCA,ToxTI,SGS	
	IC.....14	50.17.1574	74 HC 574	** 74 HC 574 ** Phs,Mot,NS,RCA,ToxTI,SGS	
	IC.....15	50.32.0124	NE 5532 AN	XX 5532 AN, RC 5532 AN8 Sie,Phs,Sig	
	IC.....16	50.32.0104	NE 5532 AN	XX 5532 AN, RC 5532 AN8 Sie,Phs,Sig	
	J5.....1	54.02.0443		9 Pol Chassis CRIMP D-Typ	
	J5.....1			see note 1	
	J5.....2			see note 1	
	J5.....3			see note 1	
	Q.....1	50.03.0340	aC 337-25	ITT,Phs,Sie	
	Q.....2	50.03.0340	aC 337-25	ITT,Phs,Sie	
	R.....1	57.99.0709	5x6 Ohm	PTC-Resistor, Philips nr. 2322 662 91009	
	R.....2	57.11.3339	33 Ohm	2%	
	R.....3	57.11.3339	33 Ohm	2%	
	R.....4	57.11.3102	1 kOhm	2%	
	R.....5	57.11.3102	1 kOhm	2%	
	R.....6	57.11.3103	10 kOhm	2%	
	R.....7	57.11.3273	27 Ohm	2%	

S T U D E R (00) 88/02/02 VF COMMUNICATIONS CONTROLLER PL 1.820.718.82 PAGE 2

IND.	POS.NO.	PART NO.	VALUE	SPECIFICATIONS / EQUIVALENT	MANUF.
	R.....8	57.11.3331	330 Ohm	2%	
	R.....9	57.11.3102	1 kOhm	2%	
	R.....10	57.11.3102	1 kOhm	2%	
	R.....11	57.11.3331	330 Ohm	2%	
	R.....12	57.11.3101	100 Ohm	2%	
	R.....13	57.11.3561	560 Ohm	2%	
	R.....14	57.11.3561	560 Ohm	2%	
	R.....15	57.11.3473	47 kOhm	2%	
	R.....16	57.11.3474	470 kOhm	2%	
	R.....17	57.11.3912	9.1 kOhm	2%	
	R.....18	57.11.3473	47 kOhm	2%	
	R.....19	57.11.3361	360 Ohm	2%	
	R.....20	57.11.3332	3.3 kOhm	2%	
	R.....21	57.11.3332	3.3 kOhm	2%	
	R.....22	57.11.3202	2 kOhm	1%	
	R.....23	57.11.3473	47 kOhm	2%	
	R.....24	57.11.3473	47 kOhm	2%	
	R.....25	57.11.3473	47 kOhm	2%	
	R.....26	57.11.3333	33 kOhm	2%	
	R.....27	57.11.3474	470 kOhm	2%	
	R.....28	57.11.3103	10 kOhm	2%	
	R.....29	57.11.3513	51 kOhm	1%	
	R.....30	57.11.3222	2 kOhm	1%	
	R.....31	57.11.3224	220 kOhm	2%	
	R.....32	57.11.3332	3.3 kOhm	2%	
	R.....33	57.11.3332	3.3 kOhm	2%	
	R.....34	57.11.3332	3.3 kOhm	2%	
	R.....35	57.11.3101	100 Ohm	2%	
	R.....36	58.05.1202	2 kOhm	see note 2	
	R.....37	58.05.1104	100 kOhm	see note 2	
	R.....38	57.11.3332	3.3 kOhm	2%	
	S.....1	56.15.0501		see note 3	
	S.....2	56.15.0501		see note 3	
	S.....3	56.15.0501		see note 3	
	RZ.....1	57.88.9332		see note 4	

S T U D E R (00) 88/02/02 VF COMMUNICATIONS CONTROLLER PL 1.820.718.82 PAGE 3

MANUFACTURERS: AMI=American Microsystem Inc., Fx=Exar, Fc=Fairchild, Hi=Hitachi, ITT=Internetall, Mot=Motorola, N=National Semiconductors, Ph=Philips, Pan=Yntheon, RCA=RCA Corp. of America, Sus=Susco=com, SGS=SGS/Ates, Sie=Siemens, Sig=Signetics, St=Studer, Tf=Telefunken, Tho=Thomson CSF, TI=Texas Instruments, To=Toshiba.

ORIG 88/02/02

S T U D E R (00) 88/02/02 VF COMMUNICATIONS CONTROLLER PL 1.820.718.82 PAGE 6

BLOCK DIAGRAM
GENERATOR UNIT MCH 1.820.725

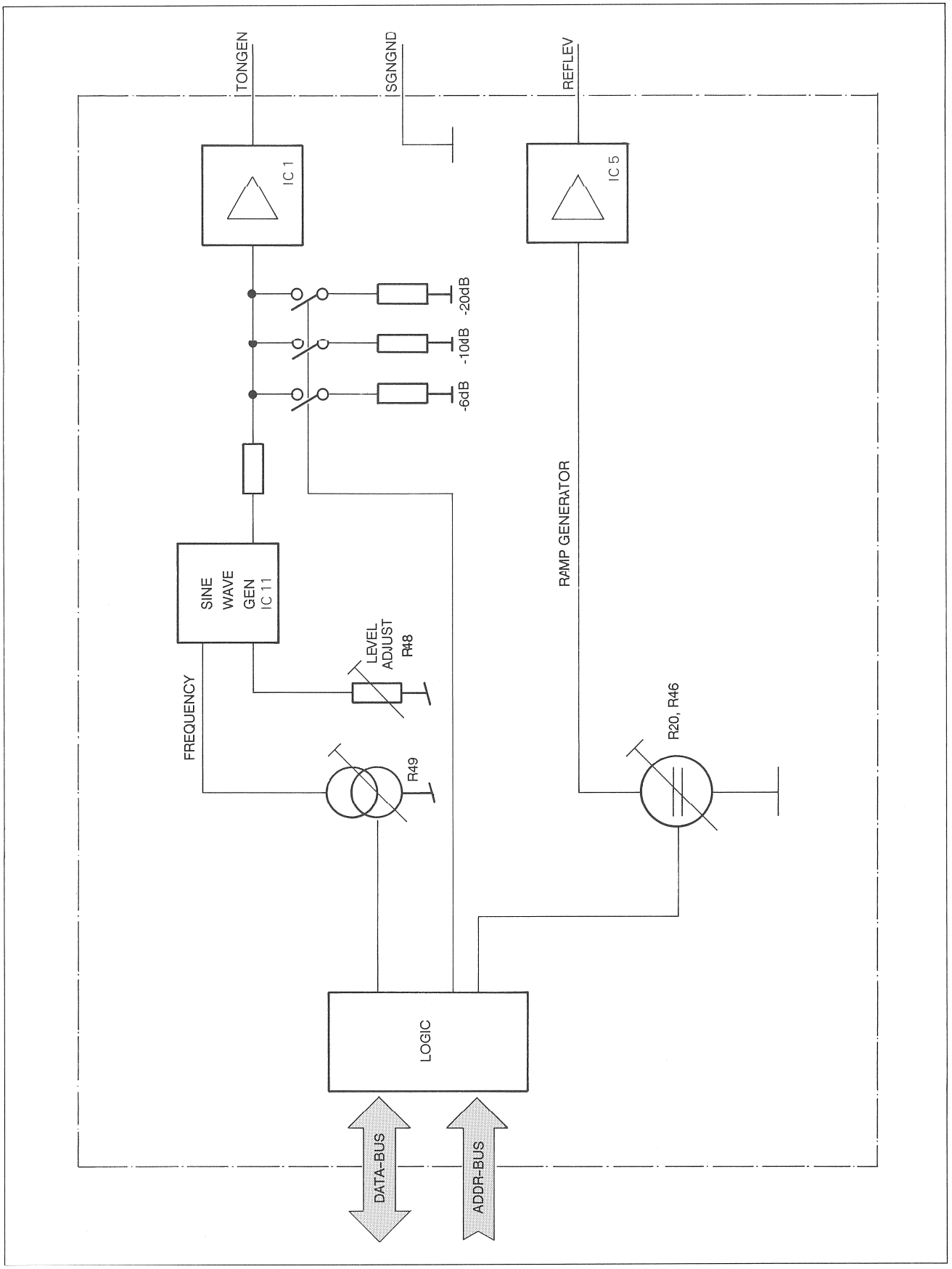

GENERATOR UNIT MCH 1.820.725.00

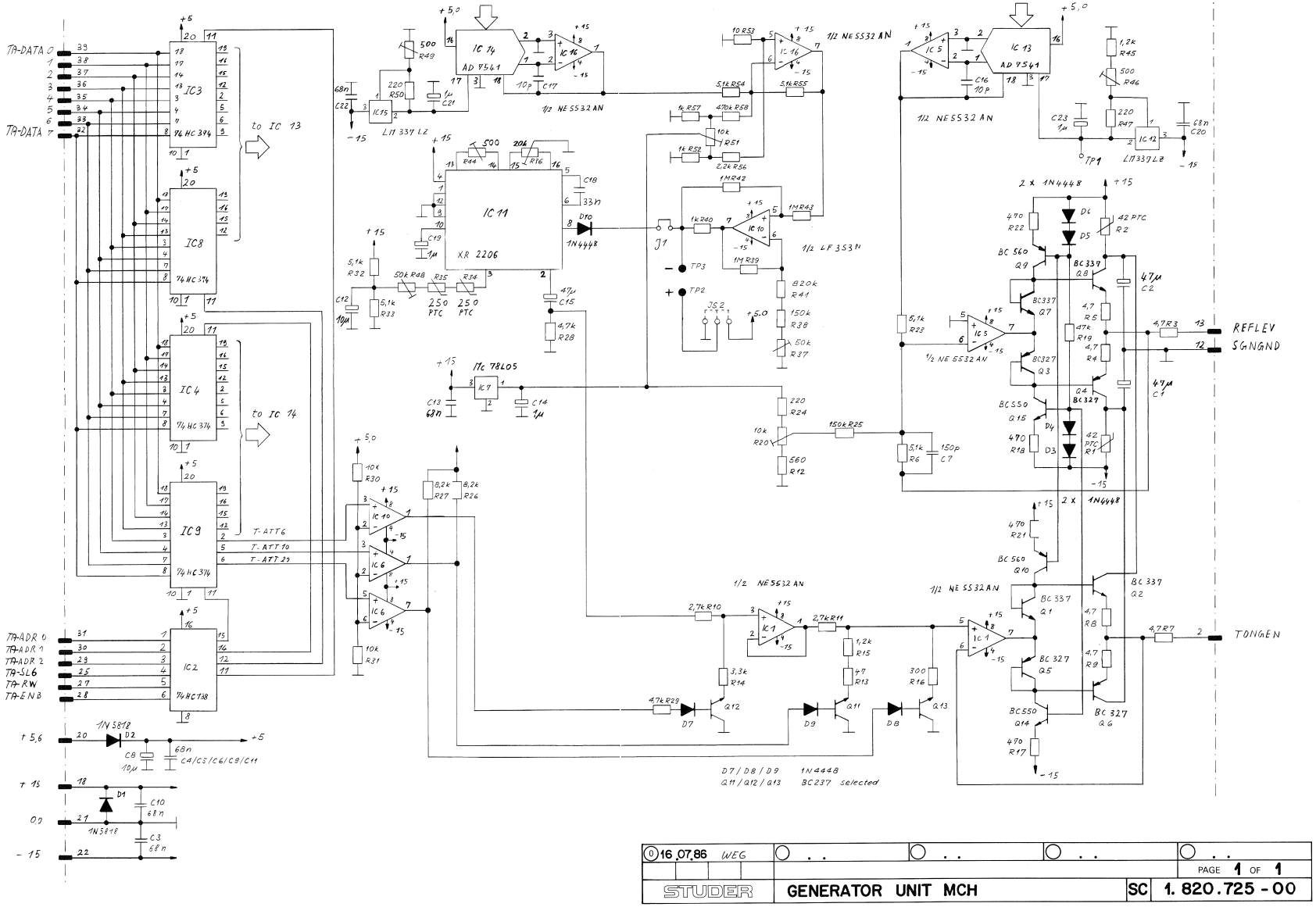

0 16.07.86 WEG					PAGE 1 OF 1
STUDER	GENERATOR UNIT MCH			SC	1.820.725-00

GENERATOR UNIT MCH 1.820.725.00

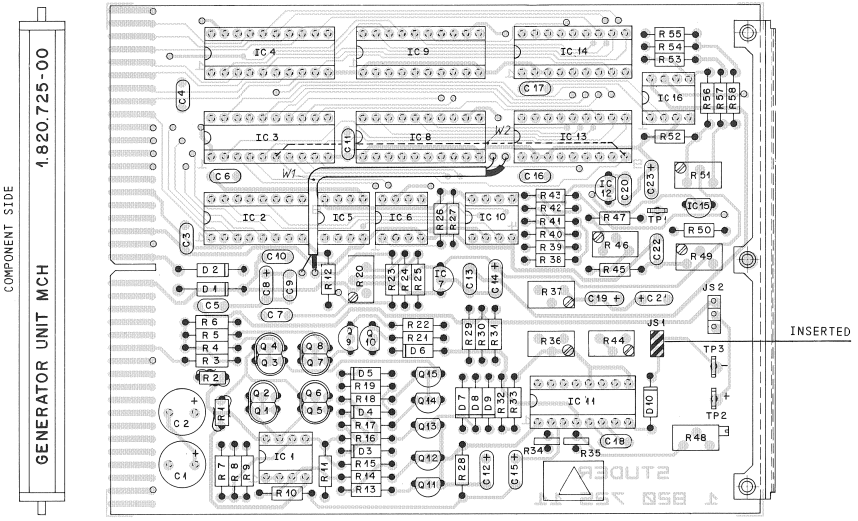

IND.	POS.NO.	PART NO.	VALUE	SPECIFICATIONS / EQUIVALENT	MANUF.
	C....1	59.22.5470	47 uF	20%, 25 V, El	
	C....2	59.22.5470	47 uF	20%, 25 V, El	
	C....3	59.06.0683	68 nF	10%	
	C....4	59.06.0683	68 nF	10%	
	C....5	59.06.0683	68 nF	10%	
	C....6	59.06.0683	68 nF	10%	
	C....7	59.34.4151	150 pF	5%	
	C....8	59.26.2100	10 uF	20%, 16 V	
	C....9	59.06.0683	68 nF	10%	
	C....10	59.06.0683	68 nF	10%	
	C....11	59.06.0683	68 nF	10%	
	C....12	59.26.2100	10 uF	20%, 16 V	
	C....13	59.06.0683	68 nF	10%	
	C....14	59.26.9109	1 uF	20%, 40 V, Sal	
	C....15	59.26.0470	47 uF	20%, 6.3 V	
	C....16	59.34.1100	10 pF	5%	
	C....17	59.34.1100	10 pF	5%	
	C....18	59.06.0333	33 nF	10%	
	C....19	59.26.9109	1 uF	20%, 40 V, Sal	
	C....20	59.06.0683	68 nF	10%	
	C....21	59.26.9109	1 uF	20%, 40 V, Sal	
	C....22	59.06.0683	68 nF	10%	
	C....23	59.26.9109	1 uF	20%, 40 V, Sal	
	D....1	50.04.0512	1N 5818	1N 5819	Mot
	D....2	50.04.0512	1N 5818	1N 5819	Mot
	D....3	50.04.0125	1N 4448		ITT=Phs=Ses=TI
	D....4	50.04.0125	1N 4448		ITT=Phs=Ses=TI
	D....5	50.04.0125	1N 4448		ITT=Phs=Ses=TI
	D....6	50.04.0125	1N 4448		ITT=Phs=Ses=TI
	D....7	50.04.0125	1N 4448		ITT=Phs=Ses=TI
	D....8	50.04.0125	1N 4448		ITT=Phs=Ses=TI
	D....9	50.04.0125	1N 4448		ITT=Phs=Ses=TI
	D....10	50.04.0125	1N 4448		ITT=Phs=Ses=TI
	IC....1	50.09.0106	NE 5532AN	XR 5532AN	Ex=Ra=Sig
	IC....2	50.17.1138	74 HC 138		Ph=Mot=NS=RCA=To=TI=SGS

IND.	POS.NO.	PART NO.	VALUE	SPECIFICATIONS / EQUIVALENT	MANUF.
	IC....3	50.17.1374	74 HC 374		Ph=Mot=NS=RCA=To=TI=SGS
	IC....4	50.17.1374	74 HC 374		Ph=Mot=NS=RCA=To=TI=SGS
	IC....5	50.09.0106	NE 5532AN	XR 5532AN	Ex=Ra=Sig
	IC....6	50.04.0283	LM 393N	LM 393DP	NS=Tho=TI
	IC....7	50.16.0107	LM78L05ACZ		Fc=NS=Sig
	IC....8	50.17.1374	74 HC 374		Ph=Mot=NS=RCA=To=TI=SGS
	IC....9	50.17.1374	74 HC 374		Ph=Mot=NS=RCA=To=TI=SGS
	IC....10	50.09.0101	TL 072CP	LF 353N	NS=Tho=TI
	IC....11	50.11.0108	XR 2206CP		Ex
	IC....12	50.16.0109	LM 337LZ		Nat
	IC....13	50.19.0102	AD7541JN	AD7541AJN, MP7623JN, MP7623KN	ADI=MPS
	IC....14	50.19.0102	AD7541JN	AD7541AJN, MP7623JN, MP7623KN	ADI=MPS
	IC....15	50.16.0109	LM 337LZ		Nat
	IC....16	50.09.0106	NE 5532AN	XR 5532AN	Ex=Ra=Sig
	JS....1			see note 1	
	JS....2			see note 1	
	Q....1	50.01.0516	BC 337 E		Sie
	Q....2	50.01.0516	BC 337 E		Sie
	Q....3	50.01.0625	BC 327 E		Sie
	Q....4	50.01.0625	BC 327 E		Sie
	Q....5	50.01.0625	BC 327 E		Sie
	Q....6	50.01.0625	BC 327 E		Sie
	Q....7	50.01.0516	BC 337 E		Sie
	Q....8	50.01.0516	BC 337 E		Sie
	Q....9	50.01.0496	BC 560 E		Sie
	Q....10	50.01.0496	BC 560 E		Sie
	Q....11	1.010.834.50		see note 2	
	Q....12	1.010.834.50		see note 2	
	Q....13	1.010.834.50		see note 2	
	Q....14	50.01.0497	BC 550 E		Sie
	Q....15	50.01.0497	BC 550 E		Sie
	R....1	57.92.1820	42 Ohm	PTC Resistor, Philips nr. 2322 660 18291	
	R....2	57.92.1820	42 Ohm	PTC Resistor, Philips nr. 2322 660 18291	
	R....3	57.11.4479	4.7 Ohm	2%	

IND.	POS.NO.	PART NO.	VALUE	SPECIFICATIONS / EQUIVALENT	MANUF.
	R....4	57.11.4479	4.7 Ohm	2%	
	R....5	57.11.4479	4.7 Ohm	2%	
	R....6	57.11.3512	5.1 kOhm	1%	
	R....7	57.11.4479	4.7 Ohm	2%	
	R....8	57.11.4479	4.7 Ohm	2%	
	R....9	57.11.4479	4.7 Ohm	2%	
	R....10	57.11.3272	2.7 kOhm	1%	
	R....11	57.11.3272	2.7 kOhm	1%	
	R....12	57.11.4561	560 Ohm	2%	
	R....13	57.11.4470	47 Ohm	2%	
	R....14	57.11.3332	3.3 kOhm	1%	
	R....15	57.11.3122	1.2 kOhm	1%	
	R....16	57.11.3301	300 Ohm	1%	
	R....17	57.11.4471	470 Ohm	2%	
	R....18	57.11.4471	470 Ohm	2%	
	R....19	57.11.4473	47 kOhm	2%	
	R....20	58.05.1103	10 kOhm	see note 3	
	R....21	57.11.4471	470 Ohm	2%	
	R....22	57.11.4471	470 Ohm	2%	
	R....23	57.11.3512	5.1 kOhm	1%	
	R....24	57.11.4221	220 Ohm	2%	
	R....25	57.11.4154	150 kOhm	2%	
	R....26	57.11.4822	8.2 kOhm	2%	
	R....27	57.11.4822	8.2 kOhm	2%	
	R....28	57.11.4472	4.7 kOhm	2%	
	R....29	57.11.4472	4.7 kOhm	2%	
	R....30	57.11.4103	10 kOhm	2%	
	R....31	57.11.4103	10 kOhm	2%	
	R....32	57.11.3512	5.1 kOhm	1%	
	R....33	57.11.3512	5.1 kOhm	1%	
	R....34	57.99.0216	250 Ohm	PTC Resistor, Philips nr. 2322 660 91001	
	R....35	57.99.0216	250 Ohm	PTC Resistor, Philips nr. 2322 660 91001	
	R....36	58.05.1223	20 kOhm	see note 4	
	R....37	58.05.1503	50 kOhm	see note 5	
	R....38	57.11.4154	150 kOhm	2%	
	R....39	57.11.4135	1 MOhm	2%	
	R....40	57.11.4102	1 kOhm	2%	

IND.	POS.NO.	PART NO.	VALUE	SPECIFICATIONS / EQUIVALENT	MANUF.
	R....41	57.11.4824	820 kOhm	2%	
	R....42	57.11.4105	1 MOhm	2%	
	R....43	57.11.4105	1 MOhm	2%	
	R....44	58.05.1501	500 Ohm	see note 6	
	R....45	57.11.4122	1.2 kOhm	2%	
	R....46	58.05.1501	500 Ohm	see note 6	
	R....47	57.11.4221	220 Ohm	2%	
	R....48	58.05.0503	50 kOhm	see note 7	
	R....49	58.05.1501	500 Ohm	see note 6	
	R....50	57.11.4221	220 Ohm	2%	
	R....51	58.05.1103	10 kOhm	see note 3	
	R....52	57.11.4102	1 kOhm	2%	
	R....53	57.11.4100	10 Ohm	2%	
	R....54	57.11.3512	5.1 kOhm	1%	
	R....55	57.11.3512	5.1 kOhm	1%	
	R....56	57.11.4222	2.2 kOhm	2%	
	R....57	57.11.4102	1 kOhm	2%	
	R....58	57.11.4474	470 kOhm	2%	
	TP....1	54.02.0320		Testpoint	
	TP....2	54.02.0320		Testpoint	
	TP....3	54.02.0320		Testpoint	

IND.	POS.NO.	PART NO.	VALUE	SPECIFICATIONS / EQUIVALENT	MANUF.
	Note 1 - Contact pins:	Studer nr.		54.01.0020	
		Berg nr.		75 160-102-36	
		Philips nr.		2422 025 89303	
	Bridge:	Studer nr.		54.01.0021	
		Berg nr.		65 474-001	
		Philips nr.		2422 024 88003	
	Note 2 - BC 237 B selected for invers mode (IBC = 3 mA)	VCE < 0.7 mV, IC = mA. VCE < 25 mV, IC = 4 mA			
	Note 3 - 10 kOhm Potentiometer:	Bourns nr.		3296 Y - 1 - 103	
		Contelelc nr.		103 WZ 103	
		Murata nr.		PCT 3105 Y - 1 - 103	
		Spectrol nr.		64 Y 103 T 000	
	Note 4 - 20 kOhm Potentiometer:	Bourns nr.		3296 Y - 1 - 203	
		Contelelc nr.		103 WZ 203	
		Murata nr.		PCT 3105 Y - 1 - 203	
		Spectrol nr.		64 Y 203 T 000	
	Note 5 - 50 kOhm Potentiometer:	Bourns nr.		3296 Y - 1 - 503	
		Contelelc nr.		103 WZ 503	
		Murata nr.		PCT 3105 Y - 1 - 503	
		Spectrol nr.		64 Y 503 T 000	
	Note 6 - 500 Ohm Potentiometer:	Bourns nr.		3296 Y - 1 - 501	
		Contelelc nr.		103 WZ 501	
		Murata nr.		PCT 3105 Y - 1 - 501	
		Spectrol nr.		64 Y 501 T 000	
	Note 7 - 50 kOhm Potentiometer:	Bourns nr.		3296 Z - 1 - 503	
		Contelelc nr.		103 XZ 503	
		Murata nr.		PCT 3105 Z - 1 - 503	
		Spectrol nr.		64 Z 503 T 000	

El=Electrolytic, Sal=Solid aluminium

MANUFACTURER: ADI=Analog Devices Inc., Ex=Exar, Fc=Fairchild,
ITT=Intermetall, Mot=Motorola, MPS=Micro Power Systems,
Nat=National, NS=National Semiconductor, Ph=Philips,
Ra=Raytheon, RCA=RCA Corp. of America, Ses=Sescosem,
SGS=SGS/Ates, Sie=Siemens, Sig=Signetics, Tho=Thomson CSF,
TI=Texas Instruments, To=Toshiba.

ORIG 86/10/15

GENERATOR UNIT MCH 1.820.725.81

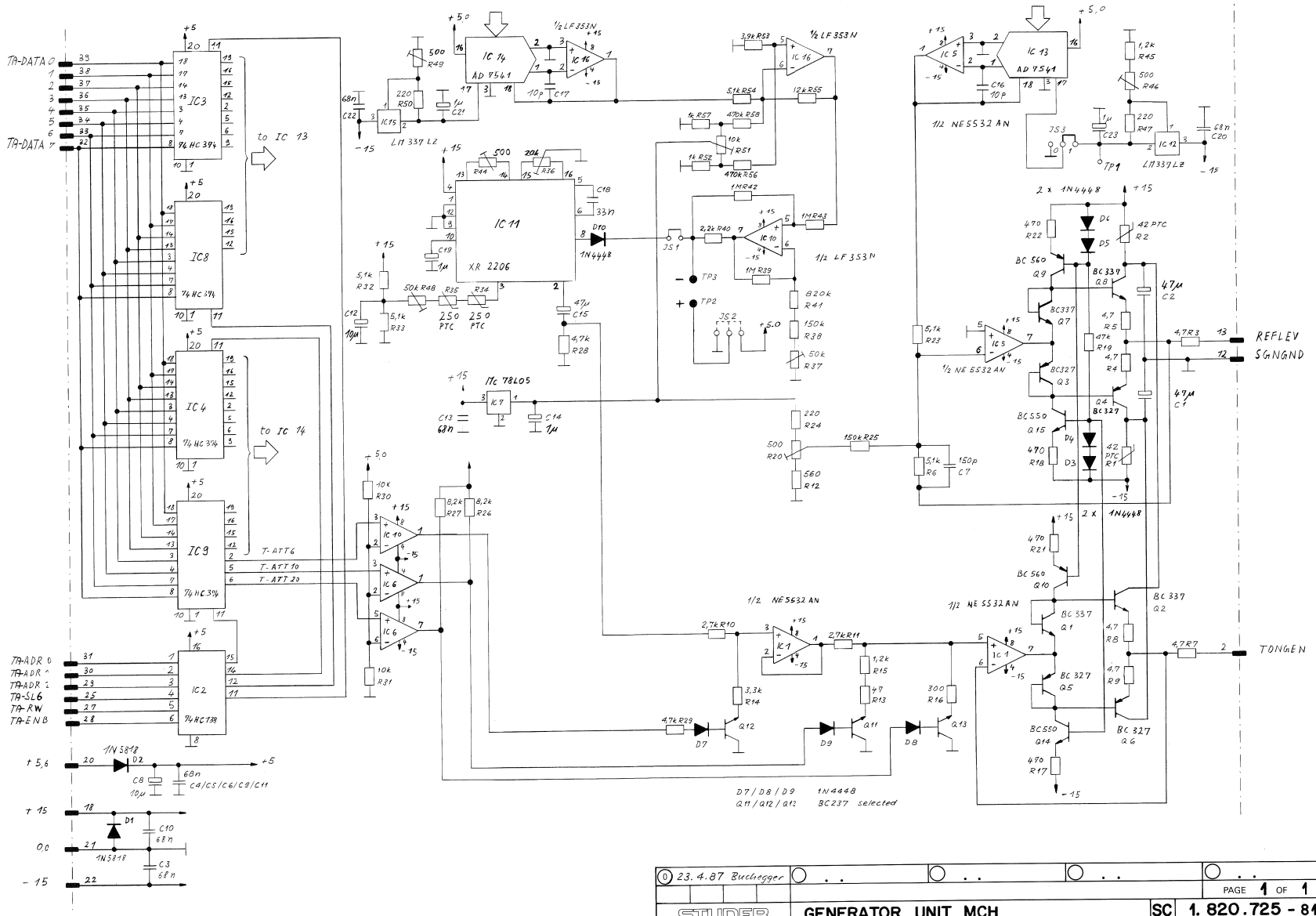

0 23.4.87 Buchegger					PAGE 1 OF 1
STUDER	GENERATOR UNIT MCH			SC	1.820.725 - 81

GENERATOR UNIT MCH 1.820.725.81

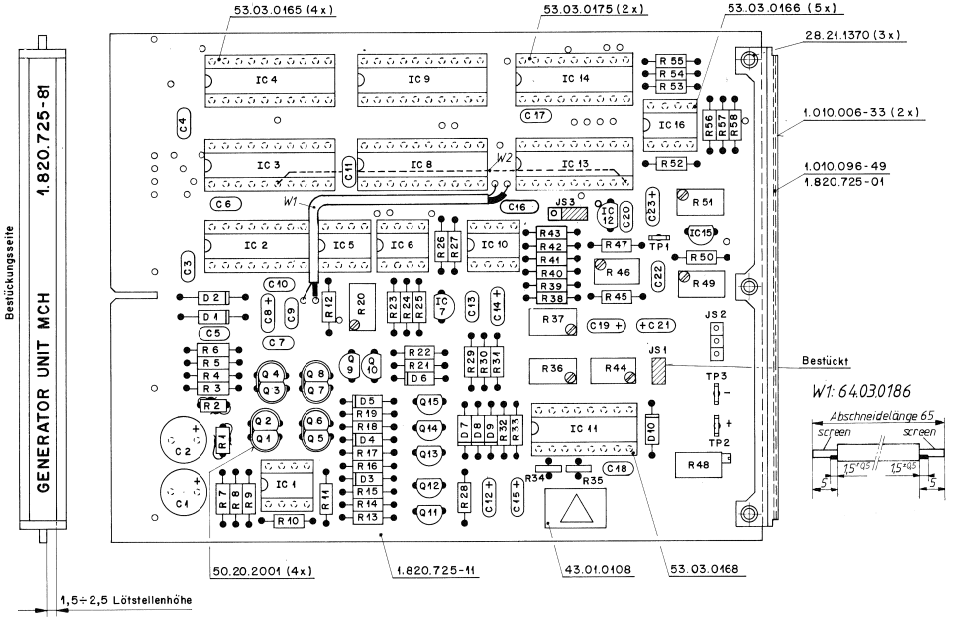

Lay out -11*: Leiterbahn LS unterbrochen bei IC3;Pin6 und IC13;Pin9, beide Pins mit W2 (1.010.112-64) verbunden, IC 12 mit Sockel.
* entfällt bei Lay out -11①, JS 3 neu.

IND.	POS.NO.	PART NO.	VALUE	SPECIFICATIONS / EQUIVALENT	MANUF.
	C....1	59.22.5470	47 uF	20%, 25 V, El	
	C....2	59.22.5470	47 uF	20%, 25 V, El	
	C....3	59.06.0683	68 nF	10%	
	C....4	59.06.0683	68 nF	10%	
	C....5	59.06.0683	68 nF	10%	
	C....6	59.06.0683	68 nF	10%	
	C....7	59.34.4151	150 pF	5%	
	C....8	59.26.2100	10 uF	20%, 16 V	
	C....9	59.06.0683	68 nF	10%	
	C....10	59.06.0683	68 nF	10%	
	C....11	59.06.0683	68 nF	10%	
	C....12	59.26.2100	10 uF	20%, 16 V	
	C....13	59.06.0683	68 nF	10%	
	C....14	59.26.9109	1 uF	20%, 40 V, Sal	
	C....15	59.26.0470	47 uF	20%, 6.3 V	
	C....16	59.34.1100	10 pF	5%	
	C....17	59.34.1100	10 pF	5%	
	C....18	59.06.0333	33 nF	10%	
	C....19	59.26.9109	1 uF	20%, 40 V, Sal	
	C....20	59.06.0683	68 nF	10%	
	C....21	59.26.9109	1 uF	20%, 40 V, Sal	
	C....22	59.06.0683	68 nF	10%	
	C....23	59.26.9109	1 uF	20%, 40 V, Sal	
	D....1	50.04.0512	1N 5818	1N 5819	Mot
	D....2	50.04.0512	1N 5818	1N 5819	Mot
	D....3	50.04.0125	1N 4448		ITT,Ph,Ses,TI
	D....4	50.04.0125	1N 4448		ITT,Ph,Ses,TI
	D....5	50.04.0125	1N 4448		ITT,Ph,Ses,TI
	D....6	50.04.0125	1N 4448		ITT,Ph,Ses,TI
	D....7	50.04.0125	1N 4448		ITT,Ph,Ses,TI
	D....8	50.04.0125	1N 4448		ITT,Ph,Ses,TI
	D....9	50.04.0125	1N 4448		ITT,Ph,Ses,TI
	D....10	50.04.0125	1N 4448		ITT,Ph,Ses,TI
	IC....1	50.09.0106	NE 5532AN	XR 5532AN	Ex,Ra,Sig
	IC....2	50.17.1138	74 HC 138		Ph,Mot,NS,RCA,To,TI,SGS

IND.	POS.NO.	PART NO.	VALUE	SPECIFICATIONS / EQUIVALENT	MANUF.
	IC....3	50.17.1374	74 HC 374		Ph,Mot,NS,RCA,To,TI,SGS
	IC....4	50.17.1374	74 HC 374		Ph,Mot,NS,RCA,To,TI,SGS
	IC....5	50.09.0106	NE 5532AN	XR 5532AN	Ex,Ra,Sig
	IC....6	50.05.0283	LM 393N	LM 393DP	NS,Tho,TI
	IC....7	50.10.0107	LM78L05ACZ		Fc,NS,Sig
	IC....8	50.17.1374	74 HC 374		Ph,Mot,NS,RCA,To,TI,SGS
	IC....9	50.17.1374	74 HC 374		Ph,Mot,NS,RCA,To,TI,SGS
	IC....10	50.09.0101	TL 072CP	LF 353N	NS,Tho,TI
	IC....11	50.11.0108	XR 2206CP		Ex
	IC....12	50.10.0109	LM 337LZ		Nat
	IC....13	50.19.0102	AD7541AJN	AD7541AJN, MP7623JN, 4P7623KN	ADI,MPS
	IC....14	50.19.0102	AD7541JN	AD7541AJN, MP7623JN, 4P7623KN	ADI,MPS
	IC....15	50.10.0109	LM 337LZ		Nat
	IC....16	50.09.0101	TL 072CP	LF 353N	NS,Tho,TI
	JS....1			see note 1	
	JS....2			see note 1	
	JS....3			see note 1	
	Q....1	50.03.0516	BC 337 E		Sie
	Q....2	50.03.0516	BC 337 E		Sie
	Q....3	50.03.0625	BC 327 E		Sie
	Q....4	50.03.0625	BC 327 E		Sie
	Q....5	50.03.0625	BC 327 E		Sie
	Q....6	50.03.0625	BC 327 E		Sie
	Q....7	50.03.0516	BC 337 E		Sie
	Q....8	50.03.0516	BC 337 E		Sie
	Q....9	50.03.0496	BC 560 E		Sie
	Q....10	50.03.0496	BC 560 E		Sie
	Q....11	1.010.034.50		see note 2	
	Q....12	1.010.034.50		see note 2	
	Q....13	1.010.034.50		see note 2	
	Q....14	50.03.0497	BC 550 E		Sie
	Q....15	50.03.0497	BC 550 E		Sie
	R....1	57.92.1820	42 Ohm	PTC Resistor, Philips nr. 2322 660 18291	
	R....2	57.92.1820	42 Ohm	PTC Resistor, Philips nr. 2322 660 18291	

IND.	POS.NO.	PART NO.	VALUE	SPECIFICATIONS / EQUIVALENT	MANUF.
	R....3	57.11.4479	4.7 Ohm	2%	
	R....4	57.11.4479	4.7 Ohm	2%	
	R....5	57.11.4479	4.7 Ohm	2%	
	R....6	57.11.3512	5.1 kOhm	1%	
	R....7	57.11.4479	4.7 Ohm	2%	
	R....8	57.11.4479	4.7 Ohm	2%	
	R....9	57.11.4479	4.7 Ohm	2%	
	R....10	57.11.3272	2.7 kOhm	1%	
	R....11	57.11.3272	2.7 kOhm	1%	
	R....12	57.11.4561	560 Ohm	2%	
	R....13	57.11.4470	47 Ohm	2%	
	R....14	57.11.3332	3.3 kOhm	1%	
	R....15	57.11.3122	1.2 kOhm	1%	
	R....16	57.11.3301	300 Ohm	1%	
	R....17	57.11.4471	470 Ohm	2%	
	R....18	57.11.4471	470 Ohm	2%	
	R....19	57.11.4473	47 kOhm	2%	
	R....20	58.05.1301	500 Ohm	see note 6	
	R....21	57.11.4471	470 Ohm	2%	
	R....22	57.11.4471	470 Ohm	2%	
	R....23	57.11.3512	5.1 kOhm	1%	
	R....24	57.11.4221	220 Ohm	2%	
	R....25	57.11.4154	150 kOhm	2%	
	R....26	57.11.4822	8.2 kOhm	2%	
	R....27	57.11.4822	8.2 kOhm	2%	
	R....28	57.11.4472	4.7 kOhm	2%	
	R....29	57.11.4472	4.7 kOhm	2%	
	R....30	57.11.4103	10 kOhm	2%	
	R....31	57.11.4103	10 kOhm	2%	
	R....32	57.11.3512	5.1 kOhm	1%	
	R....33	57.11.3512	5.1 kOhm	1%	
	R....34	57.99.0216	250 Ohm	PTC Resistor, Philips nr. 2322 660 91001	
	R....35	57.99.0216	250 Ohm	PTC Resistor, Philips nr. 2322 660 91001	
	R....36	58.05.1203	20 kOhm	see note 4	
	R....37	58.05.1303	50 kOhm	see note 5	
	R....38	57.11.4154	150 kOhm	2%	
	R....39	57.11.4105	1 MOhm	2%	

IND.	POS.NO.	PART NO.	VALUE	SPECIFICATIONS / EQUIVALENT	MANUF.
	R....40	57.11.4222	2.2 kOhm	2%	
	R....41	57.11.4824	820 kOhm	2%	
	R....42	57.11.4105	1 MOhm	2%	
	R....43	57.11.4105	1 MOhm	2%	
	R....44	58.05.1501	500 Ohm	see note 6	
	R....45	57.11.4122	1.2 kOhm	2%	
	R....46	58.05.1501	500 Ohm	see note 6	
	R....47	57.11.4221	220 Ohm	2%	
	R....48	58.05.0503	50 kOhm	see note 7	
	R....49	58.05.1501	500 Ohm	see note 6	
	R....50	57.11.4221	220 Ohm	2%	
	R....51	58.05.1103	10 kOhm	see note 3	
	R....52	57.11.4102	1 kOhm	2%	
	R....53	57.11.4392	3.9 kOhm	2%	
	R....54	57.11.3512	5.1 kOhm	1%	
	R....55	57.11.3123	12 kOhm	1%	
	R....56	57.11.4474	470 kOhm	2%	
	R....57	57.11.4102	1 kOhm	2%	
	R....58	57.11.4474	470 kOhm	2%	
	TP....1	54.02.0320		Testpoint	
	TP....2	54.02.0320		Testpoint	
	TP....3	54.02.0320		Testpoint	

IND.	POS.NO.	PART NO.	VALUE	SPECIFICATIONS / EQUIVALENT	MANUF.
Note 1 - Contact pins:		Studer nr.		54.01.0020	
		Berg nr.		75 160-102-36	
		Philips nr.		2422 025 89303	
Bridge:		Studer nr.		54.01.0021	
		Berg nr.		65 474-001	
		Philips nr.		2422 024 88003	
Note 2 - BC 237 B selected for invers mode (iBC = 3 mA) VCE < 0.7 mV; iE 0 mA. VCE < 25 mV; iE 4 aA					
Note 3 - 10 kOhm Potentiometer:		Bourns nr.		3296 Y - 1 - 103	
		Centelec nr.		183 WZ 103	
		Murata nr.		POT 3105 Y - 1 - 103	
		Spectrol nr.		64 Y 103 T 000	
Note 4 - 20 kOhm Potentiometer:		Bourns nr.		3296 Y - 1 - 203	
		Centelec nr.		183 WZ 203	
		Murata nr.		POT 3105 Y - 1 - 203	
		Spectrol nr.		64 Y 203 T 000	
Note 5 - 50 kOhm Potentiometer:		Bourns nr.		3296 Y - 1 - 503	
		Centelec nr.		183 WZ 503	
		Murata nr.		POT 3105 Y - 1 - 503	
		Spectrol nr.		64 Y 503 T 000	
Note 6 - 500 Ohm Potentiometer:		Bourns nr.		3296 Y - 1 - 501	
		Centelec nr.		183 WZ 501	
		Murata nr.		POT 3105 Y - 1 - 501	
		Spectrol nr.		64 Y 501 T 000	
Note 7 - 50 kOhm Potentiometer:		Bourns nr.		3296 Z - 1 - 503	
		Centelec nr.		183 WZ 503	
		Murata nr.		POT 3105 Z - 1 - 503	
		Spectrol nr.		64 Z 503 T 000	

IND.	POS.NO.	PART NO.	VALUE	SPECIFICATIONS / EQUIVALENT	MANUF.

El=Electrolytic, Sal=Solid aluminium

MANUFACTURER: ADI=Analog Devices Inc., Ex=Exar, Fc=Fairchild, ITT=Intermetall, Mot=Motorola, MPS=Micro Power Systems, Nat=National, NS=National Semiconductor, Ph=Philips, Ra=Raytheon, RCA=RCA Corp. of America, Ses=Sescosem, SGS=SGS/Ates, Sie=Siemens, Sig=Signetics, Tho=Thomson CSF, TI=Texas Instruments, To=Toshiba.

DRIG 87/04/27

BLOCK DIAGRAM
GENERATOR UNIT 1.820.825

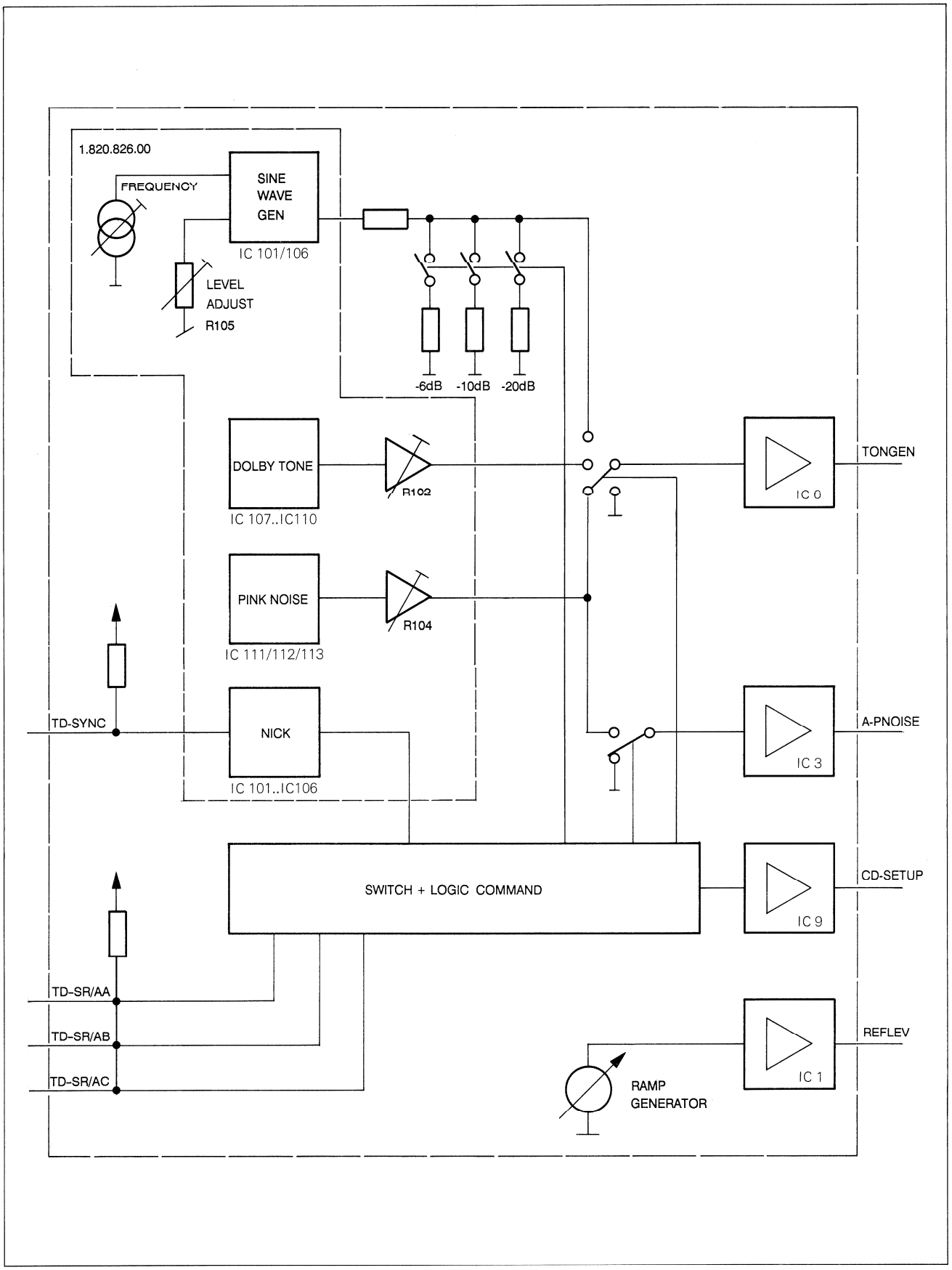

GENERATOR UNIT 1.820.825.00

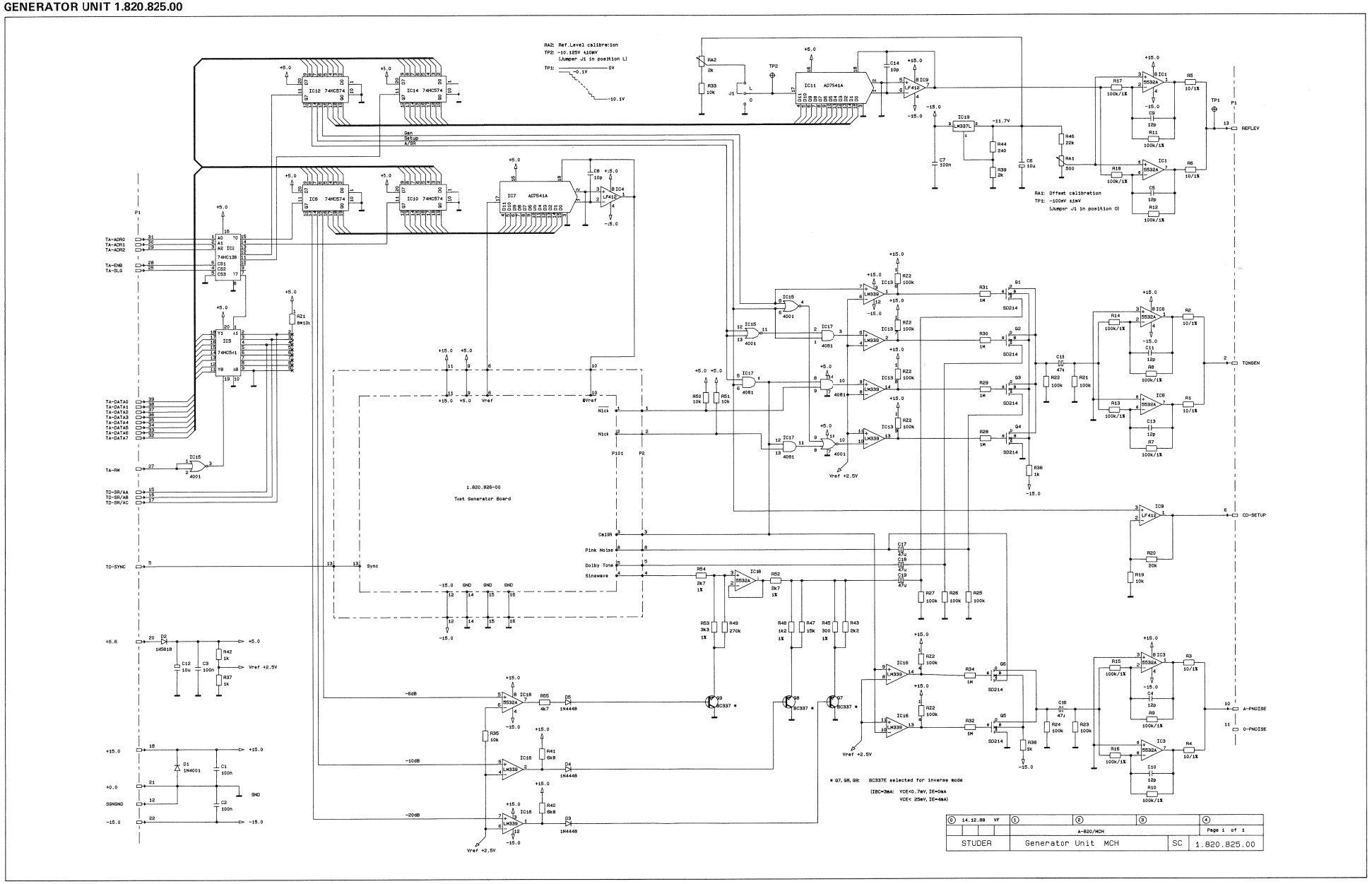

GENERATOR UNIT 1.820.825.00

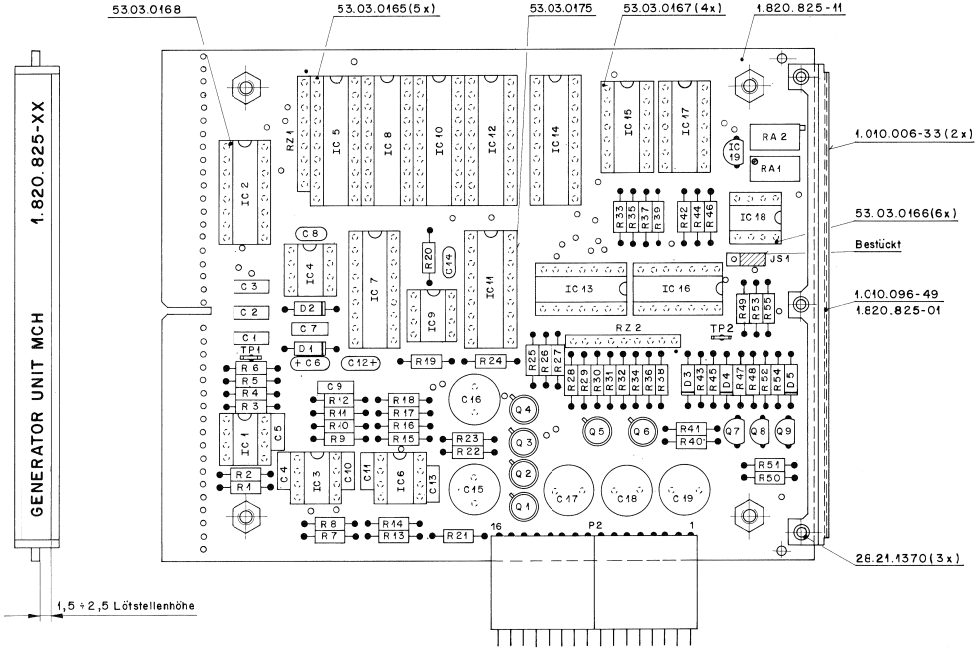

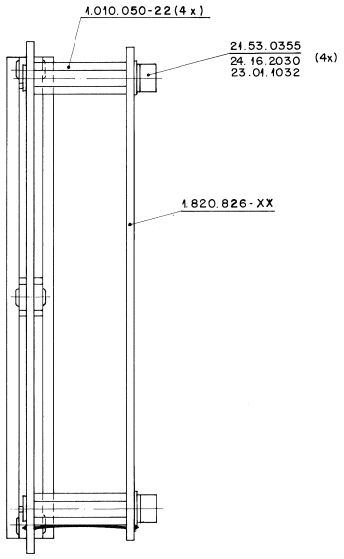

IND.	POS.NO.	PART NO.	VALUE	SPECIFICATIONS / EQUIVALENT	MANUF.
	IC....12	90.17.1574	MC74HC574N	.. 74 HC 574 .	Mot.NS.Phs.RCA.SGS.Ti.To
	IC....13	90.11.0104	LM 339 N	uA 339 PC. TOS 0139 DP	Fc.Mot.NS.Tho
	IC....14	90.17.1574	MC74HC574N	.. 74 HC 574 .	Mot.NS.Phs.RCA.SGS.Ti.To
	IC....15	90.07.0006	MC14081BCP	CD 4001 aCN. .. 4001 ..	Mot.NS.Phs.RCA.SGS.To
	IC....16	90.11.0104	LM 339 N	uA 339 PC. TOS 0139 DP	Fc.Mot.NS.Tho
	IC....17	90.07.0081	MC14081BPC	CD 4081 BP. ... 4081 ..	Mot.NS.Phs.RCA.SGS.To
	IC....18	90.09.0106	NE 5532 AN	XR 5532 AN. RC 5532 ANB	Sig.Ex.Ka
	IC....19	90.10.0109	LM 337 LZ		NS
	JS....1			see note 1	
	P.....2	64.03.0500		Flex Strip. 8 Pol.. 2 Pieces	
	R.....1	57.11.0106	SD 214 DE	BSD 214	Phs.Six
	R.....2	57.11.0106	SD 214 DE	BSD 214	Phs.Six
	R.....3	57.11.0106	SD 214 DE	BSD 214	Phs.Six
	R.....4	57.11.0106	SD 214 DE	BSD 214	Phs.Six
	R.....5	57.11.0106	SD 214 DE	BSD 214	Phs.Six
	R.....6	57.11.0106	SD 214 DE	BSD 214	Phs.Six
	R.....7	1x10.034.50		see note 2	Sie
	R.....8	1x10.034.50		see note 2	Sie
	R.....9	1x10.034.50		see note 2	Sie
	R.....1	57.11.3100	10 Ohm	1%	
	R.....2	57.11.3100	10 Ohm	1%	
	R.....3	57.11.3100	10 Ohm	1%	
	R.....4	57.11.3100	10 Ohm	1%	
	R.....5	57.11.3100	10 Ohm	1%	
	R.....6	57.11.3100	10 Ohm	1%	
	R.....7	57.11.3104	100 kOhm	1%	
	R.....8	57.11.3104	100 kOhm	1%	
	R.....9	57.11.3104	100 kOhm	1%	
	R....10	57.11.3104	100 kOhm	1%	
	R....11	57.11.3104	100 kOhm	1%	
	R....12	57.11.3104	100 kOhm	1%	
	R....13	57.11.3104	100 kOhm	1%	
	R....14	57.11.3104	100 kOhm	1%	

IND.	POS.NO.	PART NO.	VALUE	SPECIFICATIONS / EQUIVALENT	MANUF.
	R....15	57.11.3104	100 kOhm	1%	
	R....16	57.11.3104	100 kOhm	1%	
	R....17	57.11.3104	100 kOhm	1%	
	R....18	57.11.3104	100 kOhm	1%	
	R....19	57.11.3103	10 kOhm	2%	
	R....20	57.11.3203	20 kOhm	2%	
	R....21	57.11.3104	100 kOhm	2%	
	R....22	57.11.3104	100 kOhm	2%	
	R....23	57.11.3104	100 kOhm	2%	
	R....24	57.11.3104	100 kOhm	2%	
	R....25	57.11.3104	100 kOhm	2%	
	R....26	57.11.3104	100 kOhm	2%	
	R....27	57.11.3104	100 kOhm	2%	
	R....28	57.11.3105	1 MOhm	2%	
	R....29	57.11.3105	1 MOhm	2%	
	R....30	57.11.3105	1 MOhm	2%	
	R....31	57.11.3105	1 MOhm	2%	
	R....32	57.11.3105	1 MOhm	2%	
	R....33	57.11.3103	10 kOhm	2%	
	R....34	57.11.3105	1 MOhm	2%	
	R....35	57.11.3103	10 kOhm	2%	
	R....36	57.11.3102	1 kOhm	2%	
	R....37	57.11.3102	1 kOhm	2%	
	R....38	57.11.3102	1 kOhm	2%	
	R....39	57.11.3202	2 kOhm	2%	
	R....40	57.11.3682	6.8 kOhm	2%	
	R....41	57.11.3682	6.8 kOhm	2%	
	R....42	57.11.3102	1 kOhm	2%	
	R....43	57.11.3222	2.2 kOhm	2%	
	R....44	57.11.3241	240 Ohm	2%	
	R....45	57.11.3301	300 Ohm	1%	
	R....46	57.11.3223	22 kOhm	2%	
	R....47	57.11.3153	15 kOhm	2%	
	R....48	57.11.3122	1.2 kOhm	1%	
	R....49	57.11.3274	270 kOhm	2%	
	R....50	57.11.3103	10 kOhm	2%	
	R....51	57.11.3103	10 kOhm	2%	

IND.	POS.NO.	PART NO.	VALUE	SPECIFICATIONS / EQUIVALENT	MANUF.
	C.....1	59.36.0104	100 nF	10%, 63V , PETP	
	C.....2	59.36.0104	100 nF	10%, 63V , PETP	
	C.....3	59.36.0104	100 nF	10%, 63V , PETP	
	C.....4	59.34.1123	12 pF	10%, 63V , Cer	
	C.....5	59.34.1120	2 pF	10%, 63V , Cer	
	C.....6	59.25.2103	10 uF	20%, 16V , Sal	
	C.....7	59.36.0104	100 nF	10%, 63V , PETP	
	C.....8	59.34.1103	10 pF	10%, 63V , Cer	
	C.....9	59.34.1123	12 pF	10%, 63V , Cer	
	C....10	59.34.1123	12 pF	10%, 63V , Cer	
	C....11	59.34.1123	12 pF	10%, 63V , Cer	
	C....12	59.25.2103	10 uF	20%, 16V , Sal	
	C....13	59.34.1123	12 pF	10%, 63V , Cer	
	C....14	59.34.1103	10 pF	10%, 63V , Cer	
	C....15	59.99.0431	47 uF	-10%, 16V , Elbip	
	C....16	59.99.0431	47 uF	-10%, 16V , Elbip	
	C....17	59.99.0431	47 uF	-10%, 16V , Elbip	
	C....18	59.99.0431	47 uF	-10%, 16V , Elbip	
	C....19	59.99.0431	47 uF	-10%, 16V , Elbip	
	D.....1	50.04.0127	1N 4001		GI.Mot.ITT
	D.....2	50.04.0512	1N 5818	1N 3819	Fc.ITT.Phs.Ses.Tf
	D.....3	50.04.0125	1N 4448		Fc.ITT.Phs.Ses.Tf
	D.....4	50.04.0125	1N 4448		Fc.ITT.Phs.Ses.Tf
	D.....5	50.04.0125	1N 4448		Fc.ITT.Phs.Ses.Tf
	IC....1	90.09.0106	NE 5532 AN	XR 5532 AN. RC 5532 ANB	Sig.Ex.Ka
	IC....2	90.17.1138	MC74HC138N	.. 74 HC 138 .	Mot.NS.Phs.RCA.SGS.Ti.To
	IC....3	90.09.0106	NE 5532 AN	XR 5532 AN. RC 5532 ANB	Sig.Ex.Ka
	IC....4	90.09.0170	LF 412 CN	AD 712 CN	NS.ADI
	IC....5	90.17.1541	MC74HC541N	.. 74 HC 541 .	Mot.NS.Phs.RCA.SGS.Ti.To
	IC....6	90.09.0106	NE 5532 AN	XR 5532 AN. RC 5532 ANB	Sig.Ex.Ka
	IC....7	90.19.0102	AD 7541 JN	MP 7623 JN. MP 7623 KN	ADI.MPS
	IC....8	90.17.1574	MC74HC574N	.. 74 HC 574 .	Mot.NS.Phs.RCA.SGS.Ti.To
	IC....9	90.09.0170	LF 412 CN	AD 712 CN	NS.ADI
	IC....10	90.17.1574	MC74HC574N	.. 74 HC 574 .	Mot.NS.Phs.RCA.SGS.Ti.To
	IC....11	90.19.0102	AD 7541 JN	MP 7623 JN. MP 7623 KN	ADI.MPS

IND.	POS.NO.	PART NO.	VALUE	SPECIFICATIONS / EQUIVALENT	MANUF.
	R....52	57.11.3272	2.7 kOhm	1%	
	R....53	57.11.3332	3.3 kOhm	1%	
	R....54	57.11.3272	2.7 kOhm	1%	
	R....55	57.11.3472	4.7 kOhm	2%	
	RA....1	58.05.1501	500 Ohm	Potentiometer 22-turn, 10%, linear	
	RA....2	58.05.0202	2 kOhm	Potentiometer 22-turn, 10%, linear	
	RZ....1	57.86.4103	10 kOhm	Resistornetwork SIP 9, 8*10k, 2%	
	RZ....2	57.86.4104	100 kOhm	Resistornetwork SIP 9, 8*100k, 2%	

Note 1 - Contact pins:
Studer nr. 54.01.0020
Aerg nr. 75 160-102-36
Philips nr. 2422 025 89303
Bridge:
Studer nr. 54.01.0021
Aerg nr. 65 474-001
Philips nr. 2422 024 88003

Note 2 - µC 337 E selected for inverse mode (IRC = 3 mA)
VCE < 0.1 mV, IE = 3 mA. VCE < 25 mV, IE = 4 mA

Cer=Ceramic, Elbip=Electrolytic Bipolar,
PETP=Polyesterfilm, SAL=Solid Aluminium.

MANUFACTURER: ADI=Analog Devices Inc., Ex=Exar, Fc=Fairchild,
GI=General Instruments, ITT=Intermetall,
Mot=Motorola, MPS=Micro Power System,
NS=National Semiconductors, Phs=Philips,
Ra=Raytheon, RCA=Radio Corporation of America,
Ses=Seescosem, SGS=SGS/Ates, Sie=Siemens,
Sig=Signatics, Six=Siliconix, Tf=Telefunken,
Tho=Thomson, Ti=Texas Instruments, To=Toshiba.

ORIG 88/09/26

TEST GENERATOR BOARD 1.820.826.00

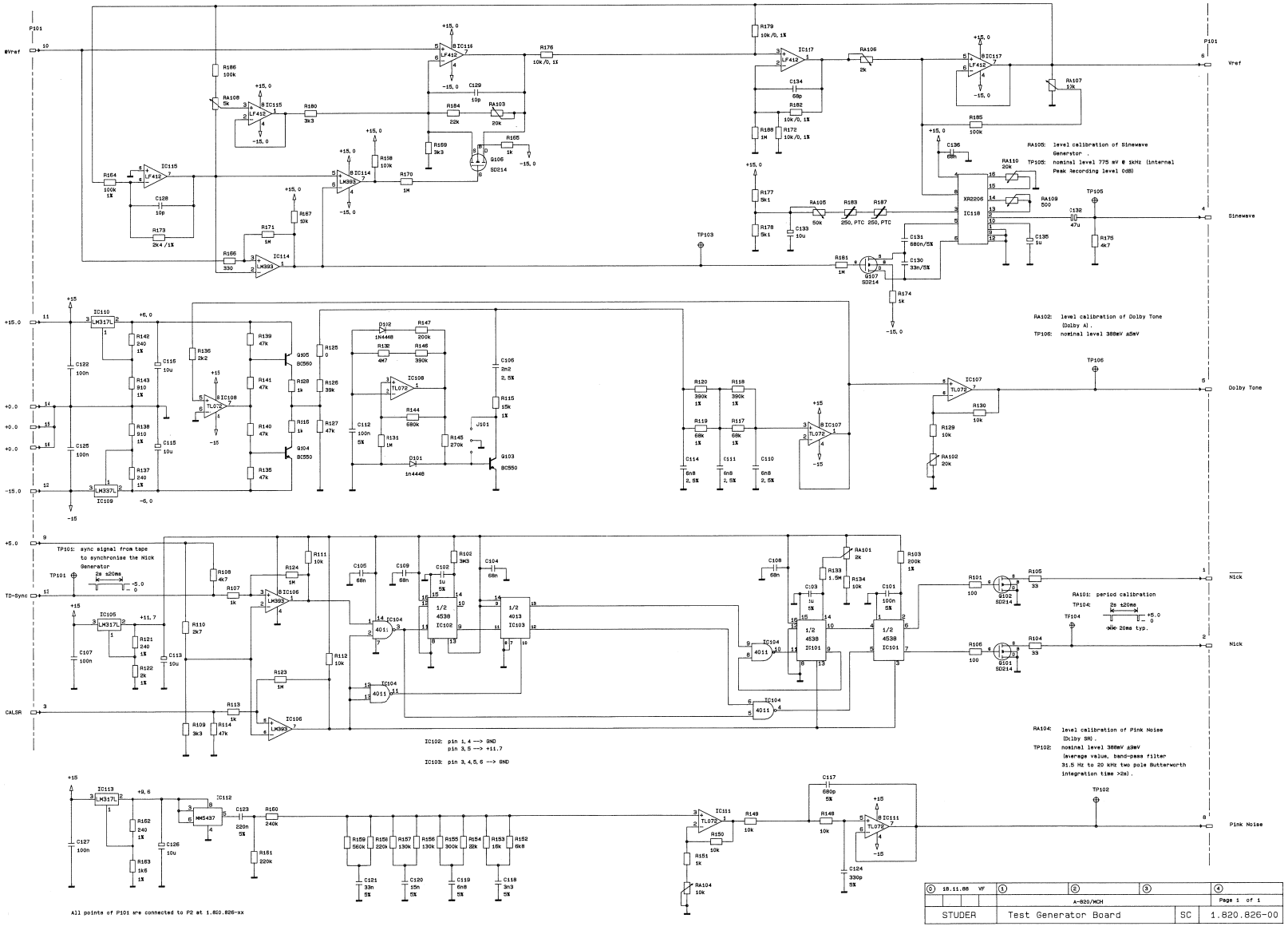

TEST GENERATOR BOARD 1.820.826.00

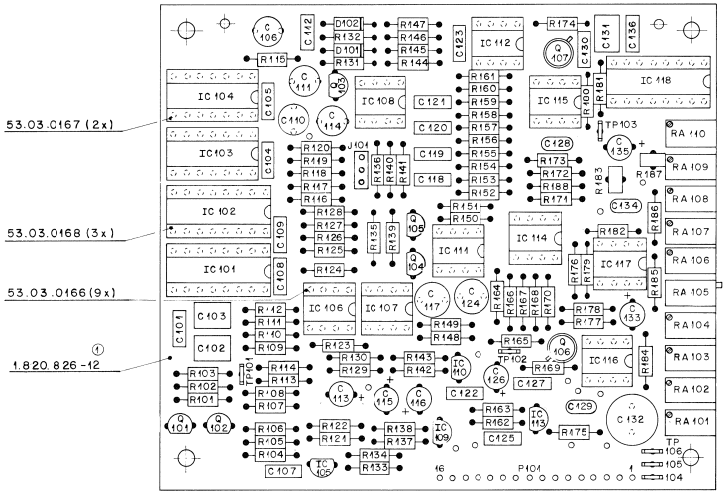

IND.	POS.NO.	PART NO.	VALUE	SPECIFICATIONS / EQUIVALENT	MANUF.
	C...101	59.06.5104	100 nF	5% 50V ▪ PETP	
	C...102	59.06.5105	1 uF	5% 50V ▪ PETP	
	C...103	59.06.5105	1 uF	5% 50V ▪ PETP	
	C...104	59.06.0683	68 nF	10% 63V ▪ PETP	
	C...105	59.06.0943	68 nF	10% 63V ▪ PETP	
	C...106	59.05.2222	2.2 nF	2.5% 630V ▪ PP	
	C...107	59.06.0104	100 nF	10% 63V ▪ PETP	
	C...108	59.06.0683	68 nF	10% 63V ▪ PETP	
	C...109	59.06.0683	68 nF	10% 63V ▪ PETP	
	C...110	59.05.2682	6.8 nF	2.5% 50V ▪ PETP	
	C...111	59.05.2682	6.8 nF	2.5% 50V ▪ PETP	
	C...112	59.06.5104	100 nF	5% 50V ▪ PETP	
	C...113	59.22.6100	10 uF	-20% 16V ▪ El	
	C...114	59.05.2682	6.8 nF	2.5% 50V ▪ PETP	
	C...115	59.22.6100	10 uF	-20% 10V ▪ El	
	C...116	59.22.6100	10 uF	-20% 10V ▪ El	
	C...117	59.05.2681	680 pF	5% 630V ▪ PP	
	C...118	59.06.5332	3.3 nF	5% 63V ▪ PETP	
	C...119	59.06.5662	6.8 nF	5% 63V ▪ PETP	
	C...120	59.06.5153	15 nF	5% 63V ▪ PETP	
	C...121	59.06.5333	33 nF	5% 63V ▪ PETP	
	C...122	59.06.0104	100 nF	10% 63V ▪ PETP	
	C...123	59.06.5224	220 nF	5% 63V ▪ PETP	
	C...124	59.05.2331	330 pF	5% 630V ▪ PP	
	C...125	59.06.0104	100 nF	10% 63V ▪ PETP	
	C...126	59.22.6100	10 uF	-20% 16V ▪ El	
	C...127	59.06.0104	100 nF	10% 63V ▪ PETP	
	C...128	59.34.1100	10 pF	10% 63V ▪ Cer	
	C...129	59.34.1100	10 pF	10% 63V ▪ Cer	
	C...130	59.06.5333	33 nF	5% 63V ▪ PETP	
	C...131	59.06.5684	680 nF	5% 50V ▪ PETP	
	C...132	59.99.0401	47 uF	-10% 16V ▪ Elbip	
	C...133	59.22.6100	10 uF	-20% 10V ▪ El	
	C...134	59.34.4680	68 pF	10% 63V ▪ Cer	
	C...135	59.22.8109	1 uF	-20% 16V ▪ El	
	C...136	59.06.0683	68 nF	10% 63V ▪ PETP	

IND.	POS.NO.	PART NO.	VALUE	SPECIFICATIONS / EQUIVALENT	MANUF.
	R...143	57.11.3911	910 Ohm	1%	
	R...144	57.11.3684	680 kOhm	2%	
	R...145	57.11.3274	270 kOhm	2%	
	R...146	57.11.3394	390 kOhm	2%	
	R...147	57.11.3204	200 kOhm	2%	
	R...148	57.11.3103	10 kOhm	2%	
	R...149	57.11.3103	10 kOhm	2%	
	R...150	57.11.3103	10 kOhm	2%	
	R...151	57.11.3102	1 kOhm	2%	
	R...152	57.11.3682	6.8 kOhm	2%	
	R...153	57.11.3163	16 kOhm	2%	
	R...154	57.11.3223	22 kOhm	2%	
	R...155	57.11.3304	300 kOhm	2%	
	R...156	57.11.3134	130 kOhm	2%	
	R...157	57.11.3134	130 kOhm	2%	
	R...158	57.11.3224	220 kOhm	2%	
	R...159	57.11.3564	560 kOhm	2%	
	R...160	57.11.3244	240 kOhm	2%	
	R...161	57.11.3224	220 kOhm	2%	
	R...162	57.11.3241	240 Ohm	1%	
	R...163	57.11.3162	1.6 kOhm	1%	
	R...164	57.11.3104	100 kOhm	1%	
	R...165	57.11.3102	1 kOhm	2%	
	R...166	57.11.3331	330 Ohm	2%	
	R...167	57.11.3103	10 kOhm	2%	
	R...168	57.11.3134	100 kOhm	2%	
	R...169	57.11.3332	3.3 kOhm	2%	
	R...170	57.11.3105	1 MOhm	2%	
	R...171	57.11.3105	1 MOhm	2%	
	R...172	57.99.0254	10 kOhm	0.1%	
	R...173	57.11.3242	2.4 kOhm	1%	
	R...174	57.11.3102	1 kOhm	2%	
	R...175	57.11.3472	4.7 kOhm	2%	
	R...176	57.99.0254	10 kOhm	0.1%	
	R...177	57.11.3512	5.1 kOhm	2%	
	R...178	57.11.3512	5.1 kOhm	2%	
	R...179	57.99.0254	10 kOhm	0.1%	

IND.	POS.NO.	PART NO.	VALUE	SPECIFICATIONS / EQUIVALENT	MANUF.
	D...101	50.04.0125	1N 4448		Fc:ITT▪Phs▪Ses▪Tf
	D...102	50.04.0125	1N 4448		Fc:ITT▪Phs▪Ses▪Tf
	IC...101	50.37.1538	MC14538BCP	HEF 4538 BP	Mot▪NS▪Ph
	IC...102	50.37.1538	MC14538BCP	HEF 4538 BP	Mot▪NS▪Ph
	IC...103	50.07.0013	MC14013BCP	CD 4013 BE; ... 4013 ..	Mot▪Phy▪RCA▪SGS
	IC...104	50.07.1011	MC14011BCP	... 4011 ..	Mot▪Phy▪RCA▪SGS▪SES▪To
	IC...105	50.10.0108	LM 317 LZ		Mot▪NS
	IC...106	50.35.0293	LM 393 P	LM 393 N▪ LM 393 DP	TI▪NS▪Tho
	IC...107	50.39.0101	TL 072 CP	TL 272 CP▪ TDB 0353 DP	Mot▪TI▪Tho
	IC...108	50.39.0101	TL 072 CP	TL 272 CP▪ TDB 0353 DP	Mot▪TI▪Tho
	IC...109	50.10.0109	LM 337 LZ		NS
	IC...110	50.10.0108	LM 317 LZ		Mot▪NS
	IC...111	50.39.0101	TL 072 CP	TL 272 CP▪ TDB 0353 DP	Mot▪TI▪Tho
	IC...112	50.11.0148	MM 5437 N		NS
	IC...113	50.10.0108	LM 317 LZ		Mot▪NS
	IC...114	50.35.0293	LM 393 P	LM 393 N▪ LM 393 DP	TI▪NS▪Tho
	IC...115	50.39.0120	LF 412 CN	AD 412 CN	NS▪ADI
	IC...116	50.39.0120	LF 412 CN	AD 412 CN	NS▪ADI
	IC...117	50.39.0120	LF 412 CN	AD 412 CN	NS▪ADI
	IC...118	50.11.0108	KA 2206 CP		Ex
	J5...101		see note 1		
	Q...101	50.33.1515	VN 0808 M	ZVN 0808 A▪ VN 0808 MTR	Fa▪Six
	Q...102	50.33.1515	VN 0808 M	ZVN 0808 A▪ VN 0808 MTR	Fa▪Six
	Q...103	50.33.0497	BC 550		Sie
	Q...104	50.33.0497	BC 550		Sie
	Q...105	50.33.0496	BC 560		Sie
	Q...106	50.11.0126	SD 214 DE	BSD 214	Phy▪Six
	Q...107	50.11.0126	SD 214 DE	BSD 214	Phy▪Six
	R...101	57.11.3131	100 Ohm	2%	
	R...102	57.11.5335	3.3 MOhm	5%	
	R...103	57.11.3214	200 kOhm	1%	
	R...104	57.11.3330	33 Ohm	2%	
	R...105	57.11.3330	33 Ohm	2%	

IND.	POS.NO.	PART NO.	VALUE	SPECIFICATIONS / EQUIVALENT	MANUF.
	R...180	57.11.3332	3.3 kOhm	2%	
	R...181	57.11.3105	1 MOhm	2%	
	R...182	57.99.0254	10 kOhm	0.1%	
	R...183	57.99.0216	250 Ohm	PTC-Resistor, Philips nr. 2322 660 91001	
	R...184	57.11.3223	22 kOhm	2%	
	R...185	57.11.3104	100 kOhm	2%	
	R...186	57.11.3104	100 kOhm	2%	
	R...187	57.99.0216	250 Ohm	PTC-Resistor, Philips nr. 2322 660 91001	
	R...188	57.11.3105	1 MOhm	2%	
	RA..101	58.05.1202	2 kOhm	Potentiometer 22-turn, 10% linear	
(03)	RA..102	58.05.1203	20 kOhm	Potentiometer 22-turn, 10% linear	
(01)	RA..102	58.05.1203	20 kOhm	Potentiometer 22-turn, 10% linear	
	RA..103	58.05.1203	20 kOhm	Potentiometer 22-turn, 10% linear	
(00)	RA..104	58.05.0103	10 kOhm	Potentiometer 22-turn, 10% linear	
(01)	RA..104	58.05.1103	10 kOhm	Potentiometer 22-turn, 10% linear	
	RA..105	58.05.0503	50 kOhm	Potentiometer 22-turn, 10% linear	
	RA..106	58.05.1202	2 kOhm	Potentiometer 22-turn, 10% linear	
	RA..107	58.05.1103	10 kOhm	Potentiometer 22-turn, 10% linear	
	RA..108	58.05.1502	5 kOhm	Potentiometer 22-turn, 10% linear	
	RA..109	58.05.1501	500 Ohm	Potentiometer 22-turn, 10% linear	
	RA..110	58.05.1203	20 kOhm	Potentiometer 22-turn, 10% linear	
	TP..101	54.02.0320	Testpoint		
	TP..102	54.02.0320	Testpoint		
	TP..103	54.02.0320	Testpoint		
	TP..104	54.02.0320	Testpoint		
	TP..105	54.02.0320	Testpoint		
	TP..106	54.02.0320	Testpoint		

IND.	POS.NO.	PART NO.	VALUE	SPECIFICATIONS / EQUIVALENT	MANUF.
	R...106	57.11.3101	100 Ohm	2%	
	R...107	57.11.3102	1 kOhm	2%	
	R...108	57.11.3472	4.7 kOhm	2%	
	R...109	57.11.3332	3.3 kOhm	2%	
	R...110	57.11.3272	2.7 kOhm	2%	
	R...111	57.11.3103	10 kOhm	2%	
	R...112	57.11.3103	10 kOhm	2%	
	R...113	57.11.3102	1 kOhm	2%	
	R...114	57.11.3473	47 kOhm	2%	
	R...115	57.11.3153	15 kOhm	1%	
	R...116	57.11.3102	1 kOhm	2%	
	R...117	57.11.3683	68 kOhm	1%	
	R...118	57.11.3394	390 kOhm	1%	
	R...119	57.11.3683	68 kOhm	1%	
	R...120	57.11.3394	390 kOhm	1%	
	R...121	57.11.3241	240 Ohm	1%	
	R...122	57.11.3202	2 kOhm	1%	
	R...123	57.11.3105	1 MOhm	2%	
	R...124	57.11.3105	1 MOhm	2%	
	R...125	57.11.4000	0 Ohm		
	R...126	57.11.3393	39 kOhm	2%	
	R...127	57.11.3473	47 kOhm	2%	
	R...128	57.11.3102	1 kOhm	2%	
	R...129	57.11.3103	10 kOhm	2%	
	R...130	57.11.3103	10 kOhm	2%	
	R...131	57.11.3105	1 MOhm	2%	
	R...132	57.11.5475	4.7 MOhm	5%	
	R...133	57.11.5155	1.5 MOhm	5%	
	R...134	57.11.3103	10 kOhm	2%	
	R...135	57.11.3473	47 kOhm	2%	
	R...136	57.11.3222	2.2 kOhm	2%	
	R...137	57.11.3241	240 Ohm	1%	
	R...138	57.11.3511	910 Ohm	1%	
	R...139	57.11.3473	47 kOhm	2%	
	R...140	57.11.3473	47 kOhm	2%	
	R...141	57.11.3473	47 kOhm	2%	
	R...142	57.11.3241	240 Ohm	1%	

(01) 30.11.88 Accessibility of RA 102 and RA 104 for factory adjusting only.

Note 1 - Contact pins: Studer nr. 54.01.0020
berg nr. 75 160-102-36
Philips nr. 2422 025 89303
Bridge (test use only): Studer nr. 54.01.0021
berg nr. 65 474-001
Philips nr. 2422 024 88003

Cer=Ceramic, el=Electrolytic, PeTP=Polyesterfilm, PP=Polypropylen.

MANUFACTURER: Ad=Analog Devices Inc. Ex=Exar, Fc=Fairchild, Fe=Ferranti
ITT=Intermetall, Mot=Motorola, NS=National Semiconductor,
Ph=Philips, RCA=Radio Corporation of America, Ses=Sescosem,
SGS=SGS/Ates, Sie=Siemens, Six=Siliconix,
SSS=Solid State Scientific, Tf=Telefunken, Tho=Thomson
TI=Texas Instruments.

ORIG 88/09/15 (01) 88/11/30

BLOCK DIAGRAM
MULTICHANNEL BUS DRIVER 1.820.723

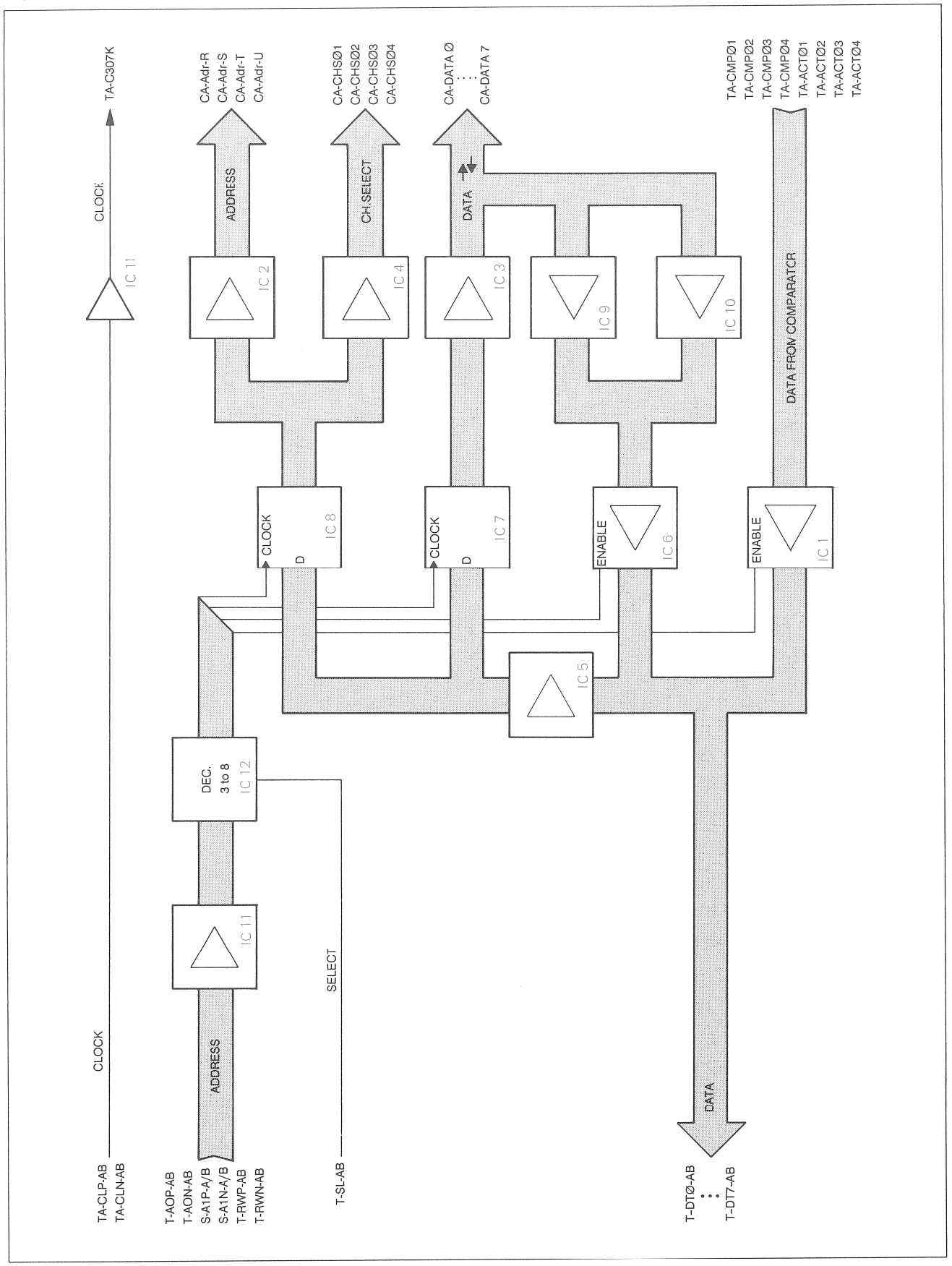

MULTICHANNEL BUS DRIVER 1.820.723.00

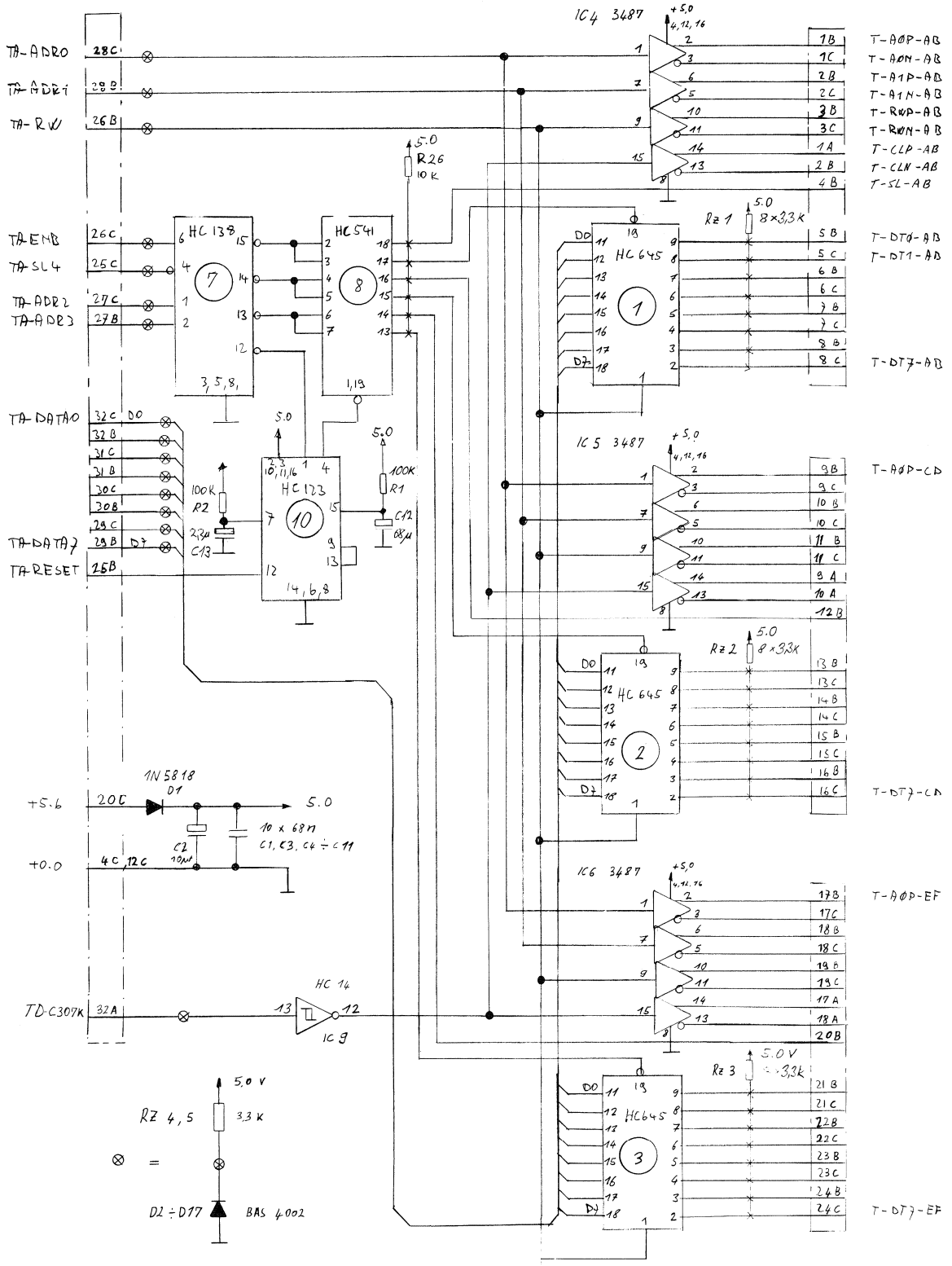

18.06.86 WEG				
STUDER	MULTICHANNEL BUS DRIVER	SC	1.820.723-00	PAGE 1 OF 1

MULTICHANNEL BUS DRIVER 1.820.723.00

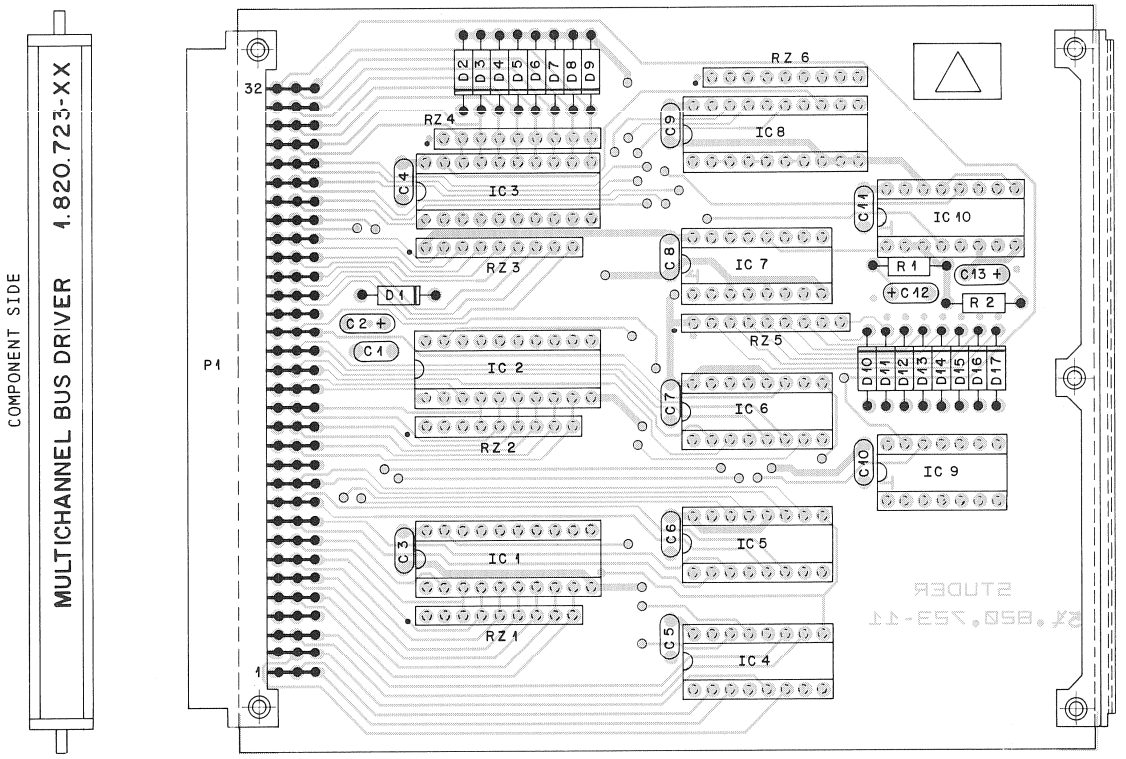

IND.	POS.NO.	PART NO.	VALUE	SPECIFICATIONS / EQUIVALENT	MANUF.
	C.....1	59.06.0683	68 nF	10%	
	C.....2	59.26.1100	10 uF	20%, 10V, Sal	
	C.....3	59.06.0683	68 nF	10%	
	C.....4	59.06.0683	68 nF	10%	
	C.....5	59.06.0683	68 nF	10%	
	C.....6	59.06.0683	68 nF	10%	
	C.....7	59.06.0683	68 nF	10%	
	C.....8	59.06.0683	68 nF	10%	
	C.....9	59.06.0683	68 nF	10%	
	C....10	59.06.0683	68 nF	10%	
	C....11	59.06.0683	68 nF	10%	
	C....12	59.26.0680	68 uF	20%, 6.3V, Sal	
	C....13	59.26.5229	2.2 uF	20%, 25V, Sal	
	D.....1	50.04.0512	1N 5818	1N 5819	Mot
	D.....2	50.04.0127	BAT 42	BAT 85, BAS 40-02	Ph,Sie,Tho
	D.....3	50.04.0127	BAT 42	BAT 85, BAS 40-02	Ph,Sie,Tho
	D.....4	50.04.0127	BAT 42	BAT 85, BAS 40-02	Ph,Sie,Tho
	D.....5	50.04.0127	BAT 42	BAT 85, BAS 40-02	Ph,Sie,Tho
	D.....6	50.04.0127	BAT 42	BAT 85, BAS 40-02	Ph,Sie,Tho
	D.....7	50.04.0127	BAT 42	BAT 85, BAS 40-02	Ph,Sie,Tho
	D.....8	50.04.0127	BAT 42	BAT 85, BAS 40-02	Ph,Sie,Tho
	D.....9	50.04.0127	BAT 42	BAT 85, BAS 40-02	Ph,Sie,Tho
	D....10	50.04.0127	BAT 42	BAT 85, BAS 40-02	Ph,Sie,Tho
	D....11	50.04.0127	BAT 42	BAT 85, BAS 40-02	Ph,Sie,Tho
	D....12	50.04.0127	BAT 42	BAT 85, BAS 40-02	Ph,Sie,Tho
	D....13	50.04.0127	BAT 42	BAT 85, BAS 40-02	Ph,Sie,Tho
	D....14	50.04.0127	BAT 42	BAT 85, BAS 40-02	Ph,Sie,Tho
	D....15	50.04.0127	BAT 42	BAT 85, BAS 40-02	Ph,Sie,Tho
	D....16	50.04.0127	BAT 42	BAT 85, BAS 40-02	Ph,Sie,Tho
	D....17	50.04.0127	BAT 42	BAT 85, BAS 40-02	Ph,Sie,Tho
	IC....1	50.17.1645	74 HC 645		Mot,NS,Ph,RCA,SGS,TI,To
	IC....2	50.17.1645	74 HC 645		Mot,NS,Ph,RCA,SGS,TI,To
	IC....3	50.17.1645	74 HC 645		Mot,NS,Ph,RCA,SGS,TI,To
	IC....4	50.15.0105	MC 3487 P	DS 3487 N	Mot,NS
	IC....5	50.15.0105	MC 3487 P	DS 3487 N	Mot,NS

IND.	POS.NO.	PART NO.	VALUE	SPECIFICATIONS / EQUIVALENT	MANUF.
	IC....6	50.15.0105	MC 3487 P	DS 3487 N	Mot,NS
	IC....7	50.17.1138	74 HC 138		Mot,NS,Ph,RCA,SGS,TI,To
	IC....8	50.17.1541	74 HC 541		Mot,NS,Ph,RCA,SGS,TI,To
	IC....9	50.17.1014	74 HC 14		Mot,NS,Ph,RCA,SGS,TI,To
	IC....10	50.17.1123	74 HC 123		Mot,NS,Ph,RCA,SGS,TI,To
	P.....1	54.01.0358		see note 1	
	R.....1	57.11.4104	100 kOhm	2%	
	R.....2	57.11.4104	100 kOhm	2%	
	RZ....1	57.88.4332		see note 2	
	RZ....2	57.88.4332		see note 2	
	RZ....3	57.88.4332		see note 2	
	RZ....4	57.88.4332		see note 2	
	RZ....5	57.88.4332		see note 2	
	RZ....6	57.88.4103		see note 3	

Note 1 - Connector, 3 * 32 contacts:

Erni nr.	9722.533.402
Souriau nr.	8609.396.71.13.765.000 E1
Harting nr.	0903 196 6921

Note 2 - Network 8 * 3.3 kOhm, 5%, single line:

Allen Bradley nr.	909 A 332
Beckmann nr.	L - 09 - 1 - R 3.3 k
Bourns nr.	4609 M - 101 - 332
Dale nr.	CSC 09 A 01 - 332 G
Sprague nr.	256 C J 332 X2 PD
Tama nr.	MRG C 09 X 3.3 kOhm G
Vitrom nr.	F9E 3.3 kOhm 2%

Note 3 - Network 8 * 10 kOhm, 5%, single line:

Allen Bradley nr.	909 A 103
Beckmann nr.	L - 09 - 1 - R 10 k
Bourns nr.	4609 M - 101 - 103
Dale nr.	CSC 09 A 01 - 103 G
Sprague nr.	256 C J 103 X2 PD
Tama nr.	MRG C 09 X 10 kOhm G
Vitrom nr.	F9E 10 kOhm 2%

Sal=Solid aluminium

MANUFACTURER: Mot=Motorola,NS=National Semiconductor, Ph=Philips,
RCA=RCA Corporation of America, SGS=SGS/Ates, Sie=Siemens,
Tho=Thomsen CSF, TI=Texas Instruments, To=Toshiba.

BASIS BOARD AUDIO CONTROL MCH 1.820.702.00

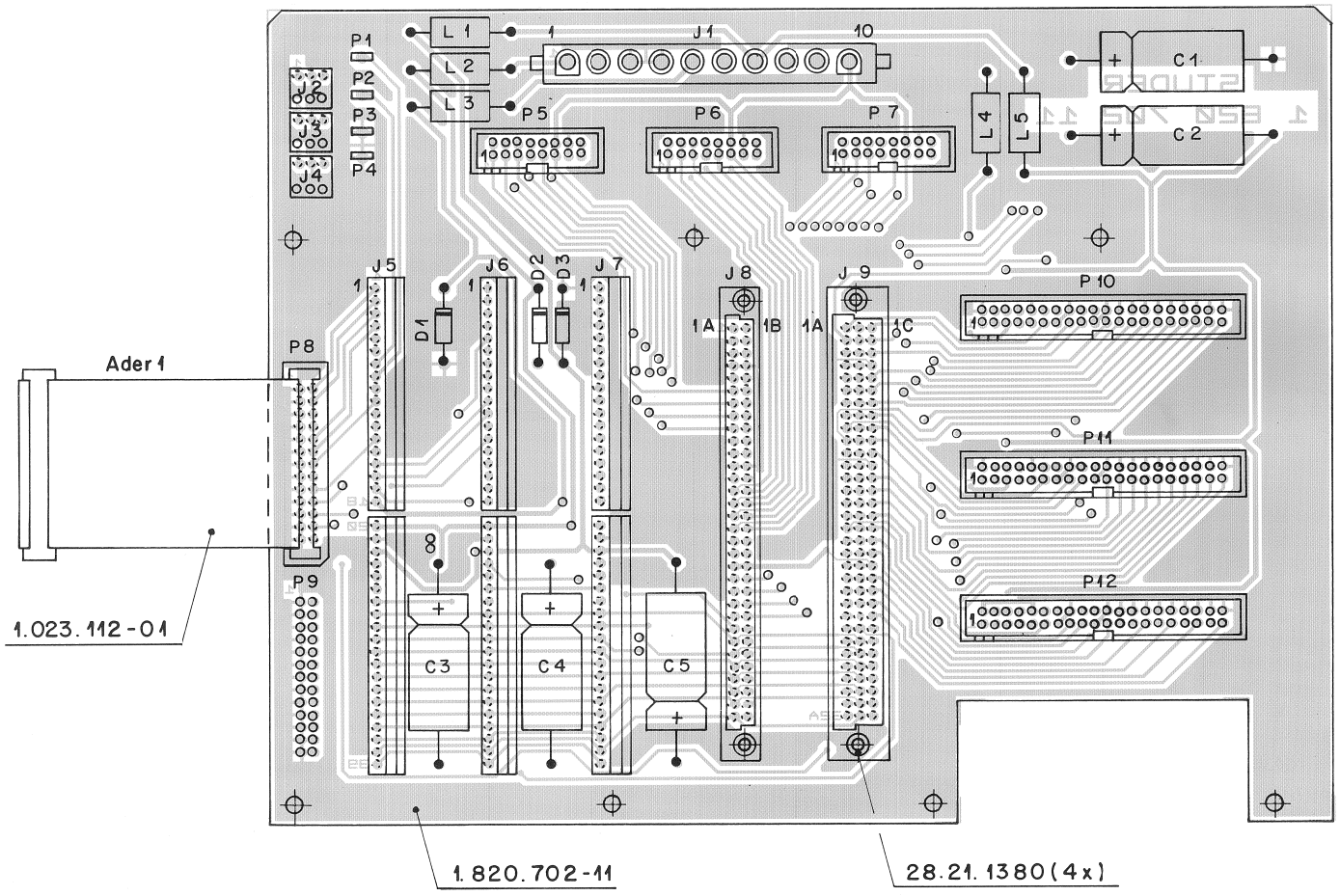

IND.	POS.NO.	PART NO.	VALUE	SPECIFICATIONS / EQUIVALENT	MANUF.
	C.....1	59.25.3471	470 uF	-20%, 16 V, El	
	C.....2	59.25.3471	470 uF	-20%, 16 V, El	
	C.....3	59.25.1102	1000 uF	-20%, 6.3 V, El	
	C.....4	59.25.3471	470 uF	-20%, 16 V, El	
	C.....5	59.25.3471	470 uF	-20%, 16 V, El	
	D.....1	50.04.0122	1N 4001	... 1N 4004	GI,ITT,Mot
	D.....2	50.04.1503	7.5 V Z	BZX 85 C 7V5, BZV ...	ITT,Mot,Ph,Tf,Tho
	D.....3	50.04.0122	1N 4001	... 1N 4004	GI,ITT,Mot
	J.....1	54.25.0010	10 cont.	AMP nr. 826852-3	
	J.....2	54.01.0287	3 cont.	AMP nr. 163.680-1	
	J.....3	54.01.0287	3 cont.	AMP nr. 163.680-1	
	J.....4	54.01.0287	3 cont.	AMP nr. 163.680-1	
	J.....5			see note 1	
	J.....6			see note 1	
	J.....7			see note 1	
	J.....8	54.11.2005		see note 2	
	J.....9	54.11.2024		see note 3	
	L.....1	62.01.0115		HF-coil, Philips nr. 4312 020 36700	
	L.....2	62.01.0115		HF-coil, Philips nr. 4312 020 36700	
	L.....3	62.01.0115		HF-coil, Philips nr. 4312 020 36700	
	L.....4	62.01.0115		HF-coil, Philips nr. 4312 020 36700	
	L.....5	62.01.0115		HF-coil, Philips nr. 4312 020 36700	
	P.....1	54.02.0320			
	P.....2	54.02.0320			
	P.....3	54.02.0320			
	P.....4	54.02.0320			
	P.....5	54.14.2002		see note 4	
	P.....6	54.14.2002		see note 4	
	P.....7	54.14.2002		see note 4	
	P.....8	54.14.2003		see note 5	
	P.....9		not used		
	P.....10	54.14.2004		see note 6	
	P.....11	54.14.2004		see note 6	
	P.....12	54.14.2004		see note 6	

IND.	POS.NO.	PART NO.	VALUE	SPECIFICATIONS / EQUIVALENT	MANUF.
	Note . - 2 connectors:				
	18 contacts,	Studer Nr.	54.10.2015		
		Burndy Nr.	GCSB 18 SD 19 V1 K9		
	20 contacts,	Studer Nr.	54.10.2026		
		Burndy Nr.	GCSB 20 SD V1 K9		
	Note 2 - connector:				
	2 * 32 contacts,	Erni Nr.	9722.543.416		
		Harting Nr.	0902 164 6824		
		Souriau Nr.	8609.264.61.24.765.000 E1		
	Note 3 - connector:				
	3 * 32 contacts,	Erni Nr.	9722.543.441		
		Harting Nr.	0903 196 6824		
		Burndy Nr.	FI 96 B 30 B00 A00 Z 1		
		Souriau Nr.	8609.396.81.24.765.000 E1		
	Note 4 - connector:				
	16 contacts,	Yamaichi Nr.	FAP-16-08-40SS		
		Burndy Nr.	BPH 9 B 16 B00 GS		
		3M Nr.	7616-6002 VZ		
	Note 5 - connector:				
	26 contacts,	Yamaichi Nr.	FAP-26-08-40SS		
		Burndy Nr.	BPH 9 B 26 B00 GS		
		3M Nr.	7626-6002 VZ		
	Note 5 - connector:				
	40 contacts,	Yamaichi Nr.	FAP-40-08-40SS		
		Burndy Nr.	BPH 9 B 40 B00 GS		
		3M Nr.	7640-6002 VZ		

S T U D E R (00) 86/09/11 PB BASISBOARD AUDIO CONTROL MCH PL 1.820.702.00

IND.	POS.NO.	PART NO.	VALUE	SPECIFICATIONS / EQUIVALENT	MANUF.

El=Electrolytic

MANUFACTURER: GI=General Instruments, ITT=Intermetall, Mot=Motorola,
Ph=Philips, Tf=Telefunken, Tho=Thomsen CSF.

ORIG 86/09/11

S T U D E R (00) 86/09/11 PB BASISBOARD AUDIO CONTROL MCH PL 1.820.702.00

BASIS BOARD AUDIO CONTROL MCH 1.820.702.81

Wire Wrap Verbindungen:

Lötseite, mit Acetatgewebe
65.02.2060 fixiert.

1.010.111-64 (3x)

Verbindungen
P8, Pin6 zu J6, Pin 1
P8, Pin8 zu J6, Pin 2
P8, Pin26 zu J6, Pin8

1.010.107-64

Verbindung
P8, Pin16 zu Lötauge ✳

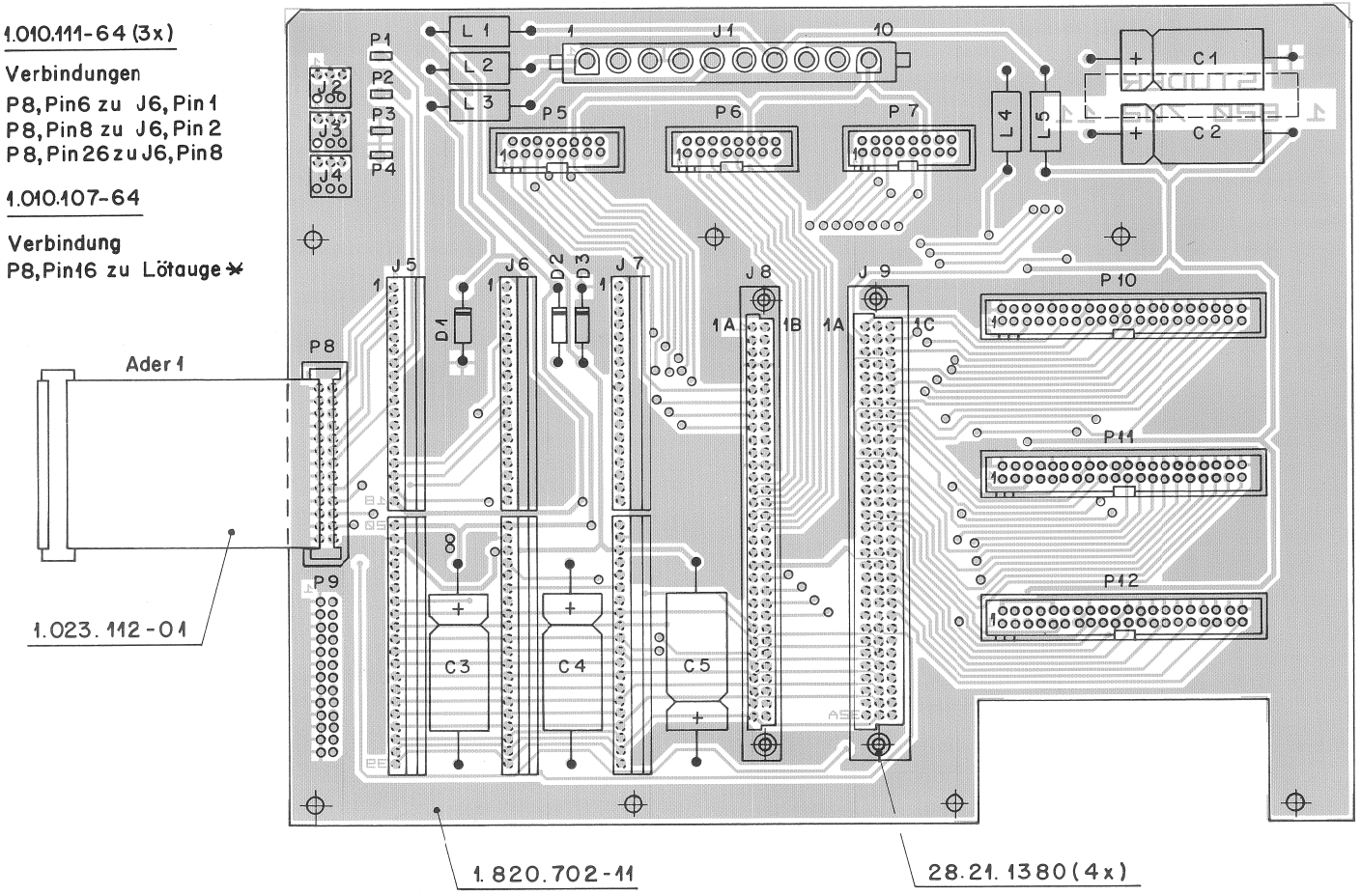

In P10, P11 und P12 je 1 Stk
Flachkabel 1.022.740-02 eingesteckt

IND.	POS.NO.	PART NO.	VALUE	SPECIFICATIONS / EQUIVALENT	MANUF.
	C....1	59.25.3471	470 uF	-20%, 16 V, El	
	C....2	59.25.3471	470 uF	-20%, 16 V, El	
	C....3	59.25.1102	1000 uF	-20%, 6.3 V, El	
	C....4	59.25.3471	470 uF	-20%, 16 V, El	
	C....5	59.25.3471	470 uF	-20%, 16 V, El	
	D....1	50.04.0122	1N 4001	... 1N 4004	GI,ITT,Mot
	D....2	50.04.1503	7.5 V Z	BZX 85 C 7V5, BZV ...	ITT,Mot,Ph,Tf,Tho
	D....3	50.04.0122	1N 4001	... 1N 4004	GI,ITT,Mot
	J....1	54.25.0010	10 cont.	AMP nr. 826852-3	
	J....2	54.01.0287	3 cont.	AMP nr. 163.680-1	
	J....3	54.01.0287	3 cont.	AMP nr. 163.680-1	
	J....4	54.01.0287	3 cont.	AMP nr. 163.680-1	
	J....5			see note 1	
	J....6			see note 1	
	J....7			see note 1	
	J....8	54.11.2005		see note 2	
	J....9	54.11.2024		see note 3	
	L....1	62.01.0115		HF-coil, Philips nr. 4312 020 36700	
	L....2	62.01.0115		HF-coil, Philips nr. 4312 020 36700	
	L....3	62.01.0115		HF-coil, Philips nr. 4312 020 36700	
	L....4	62.01.0115		HF-coil, Philips nr. 4312 020 36700	
	L....5	62.01.0115		HF-coil, Philips nr. 4312 020 36700	
	P....1	54.02.0320			
	P....2	54.02.0320			
	P....3	54.02.0320			
	P....4	54.02.0320			
	P....5	54.14.2002		see note 4	
	P....6	54.14.2002		see note 4	
	P....7	54.14.2002		see note 4	
	P....8			see note 5	
	P....9		not used		
	P....10	54.14.2004		see note 6	
	P....11	54.14.2004		see note 6	
	P....12	54.14.2004		see note 6	

IND.	POS.NO.	PART NO.	VALUE	SPECIFICATIONS / EQUIVALENT	MANUF.
Note 1 - 2 connectors:					
	18 contacts,	Studer Nr.		54.10.2015	
		Burndy Nr.		GCSB 18 SO 19 V1 K9	
	20 contacts,	Studer Nr.		54.10.2026	
		Burndy Nr.		GCSB 20 SO V1 K9	
Note 2 - connector:					
	2 * 32 contacts,	Erni Nr.		9722.543.416	
		Harting Nr.		0902 164 6824	
		Souriau Nr.		8609.264.61.24.765.000 E1	
Note 3 - connector:					
	3 * 32 contacts,	Erni Nr.		9722.543.441	
		Harting Nr.		0903 196 6824	
		Burndy Nr.		FI 96 B 30 R00 A00 Z 1	
		Souriau Nr.		8609.396.81.24.765.000 E1	
Note 4 - connector:					
	16 contacts,	Yamaichi Nr.		FAP-16-08-40SS	
		Burndy Nr.		BPH 9 B 16 B00 GS	
		3M Nr.		7616-6002 VZ	
Note 5 - connection cable:					
		Studer Nr.		1.023.112.01	
Note 6 - connector:					
	40 contacts,	Yamaichi Nr.		FAP-40-08-40SS	
		Burndy Nr.		BPH 9 B 40 B00 GS	
		3M Nr.		7640-6002 VZ	

El=Electrolytic

IND.	POS.NO.	PART NO.	VALUE	SPECIFICATIONS / EQUIVALENT	MANUF.

MANUFACTURER: GI=General Instruments, ITT=Intermetall, Mot=Motorola,
Ph=Philips, Tf=Telefunken, Tho=Thomsen CSF.

ORIG 87/09/08

BASIS BOARD AUDIO CONTROL 1.820.802.00

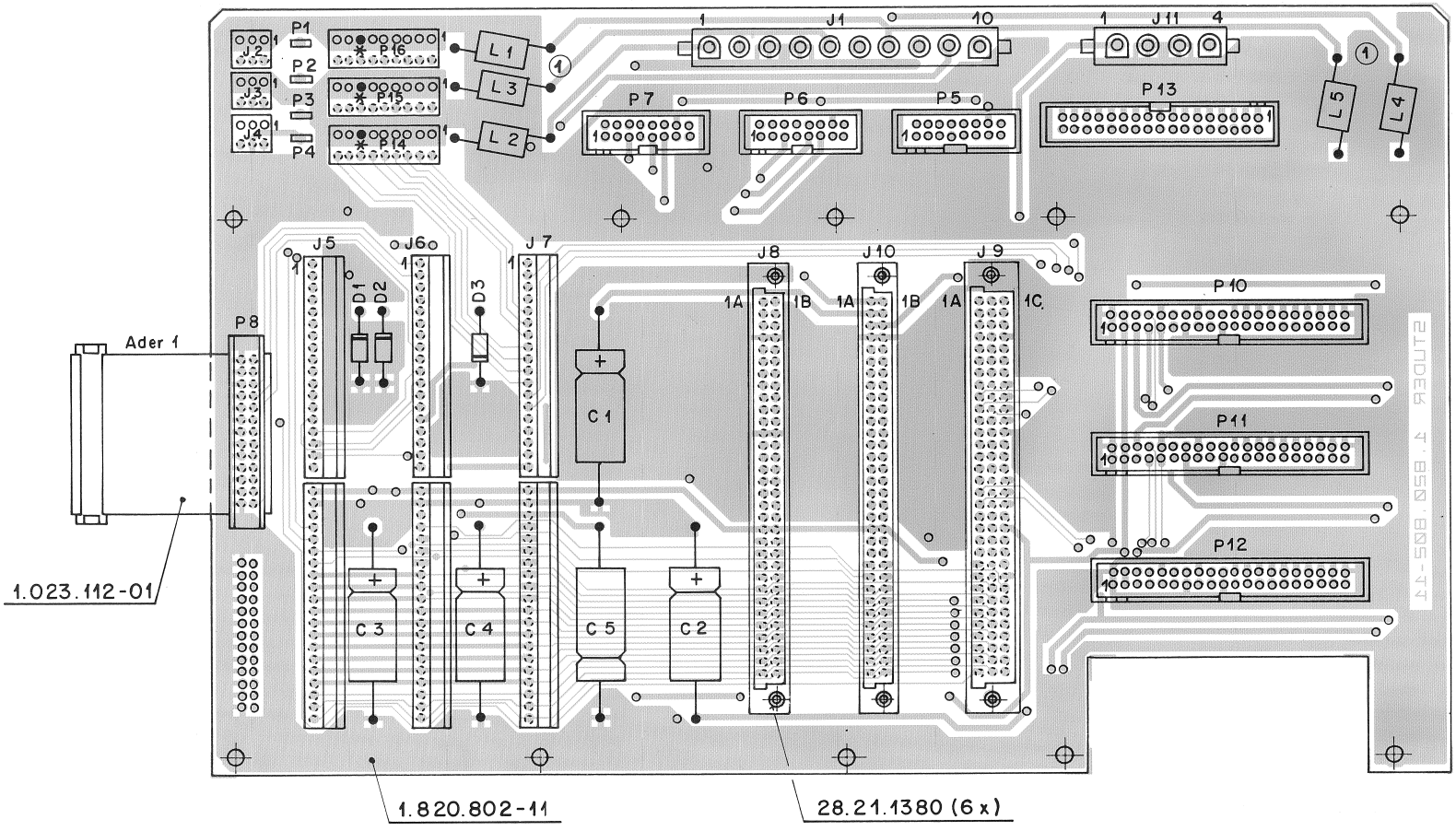

* Codierung: Schaltdraht 64.01.0108 ø 0,8 x 8mm
(1mm vorstehend)

L1 bis L5 nach BV 670 montiert.

BASIS BOARD AUDIO CONTROL 1.820.802.00

IND.	POS.NO.	PART NO.	VALUE	SPECIFICATIONS / EQUIVALENT	MANUF.
	C....1	59.25.3471	470 uF	-20%, 16 V, El	
	C....2	59.25.3471	470 uF	-20%, 16 V, El	
	C....3	59.25.1102	1000 uF	-20%, 6.3 V, El	
	C....4	59.25.3471	470 uF	-20%, 16 V, El	
	C....5	59.25.3471	470 uF	-20%, 16 V, El	
	D....1	50.04.0122	1N 4001	... 1N 4004	GI,ITT,Mot
	D....2	50.04.1503	7,5 V Z	BZX 85 C 7V5, BZV ...	ITT,Mot,Ph,Tf,Tho
	D....3	50.04.0122	1N 4001	... 1N 4004	GI,ITT,Mot
	J....1	54.25.0010	10 cont.	AMP nr. 626852-3	
	J....2	54.01.0287	3 cont.	AMP nr. 163.680-1	
	J....3	54.01.0287	3 cont.	AMP nr. 163.680-1	
	J....4	54.01.0287	3 cont.	AMP nr. 163.680-1	
	J....5			see note 1	
	J....6			see note 1	
	J....7			see note 1	
	J....8	54.11.2005		see note 2	
	J....9	54.11.2024		see note 3	
	J...10	54.11.2005		see note 2	
	J...11	54.25.0004		see note 4	
	L....1	62.01.0115		HF-coil, Philips nr. 4312 020 36700	
	L....2	62.01.0115		HF-coil, Philips nr. 4312 020 36700	
	L....3	62.01.0115		HF-coil, Philips nr. 4312 020 36700	
	L....4	62.01.0115		HF-coil, Philips nr. 4312 020 36700	
	L....5	62.01.0115		HF-coil, Philips nr. 4312 020 36700	
	P....1	54.02.0320			
	P....2	54.02.0320			
	P....3	54.02.0320			
	P....4	54.02.0320			
	P....5	54.14.2002		see note 5	
	P....6	54.14.2002		see note 5	
	P....7	54.14.2002		see note 5	
	P....8			see note 6	
	P....9		not used		

IND.	POS.NO.	PART NO.	VALUE	SPECIFICATIONS / EQUIVALENT	MANUF.
	P....10	54.14.2004		see note 7	
	P....11	54.14.2004		see note 7	
	P....12	54.14.2004		see note 7	
	P....13	54.14.2007		see note 8	
	P....14	54.01.0217		see note 9	
	P....15	54.01.0217		see note 9	
	P....16	54.01.0217		see note 9	

IND.	POS.NO.	PART NO.	VALUE	SPECIFICATIONS / EQUIVALENT	MANUF.
Note 1 - 2 connectors:					
	10 contacts,	Studer nr.	54.10.2015		
		Burndy nr.	GCSB 18 SG 19 Y1 K9		
	20 contacts,	Studer nr.	54.10.2026		
		Burndy nr.	GCSB 20 SG Y1 K9		
Note 2 - connector:					
	2 * 32 contacts,	Erni nr.	9722.543.416		
		Harting nr.	0902 164 6824		
		Souriau nr.	8609.264.61.24.765.000 E1		
Note 3 - connector:					
	3 * 32 contacts,	Erni nr.	9722.543.441		
		Harting nr.	0903 196 6824		
		Burndy nr.	FI 96 E 30 H00 A00 Z 1		
		Souriau nr.	8609.396.81.24.765.000 E1		
Note 4 - connector:					
	4 contacts,	AMP nr.	826 848 - 3		
		AMP nr.	826 848 - 1		
Note 5 - connector:					
	16 contacts,	Yamaichi nr.	FAP-16-08-40SS		
		Burndy nr.	BFH 9 B 16 B00 GS		
		3M nr.	7616-6002 VZ		
Note 6 - connection cable:					
		Studer nr.	1.029.112.01		
Note 7 - connector:					
	40 contacts,	3M nr.	7640 6002 VZ		
		Yamaichi nr.	FAP-40-08-40SS		
		Fanduit nr.	057.040.113		
		Burndy nr.	BFH 9 B40 B00 SS		
Note 8 - connector:					
	36 contacts,	3M nr.	7634 6002 VZ		

IND.	POS.NO.	PART NO.	VALUE	SPECIFICATIONS / EQUIVALENT	MANUF.
		Yamaichi nr.	FAP-34-08-40SS		
		Fanduit nr.	057.034.113		
Note 9 - connector:					
	9 contacts,	AMP nr.	163.680-7		

El=Electrolytic

MANUFACTURER: GI=General Instruments, ITT=Intermetall, Mot=Motorola,
Ph=Philips, Tf=Telefunken, Tho=Thomsen CSF.

O3IG 88/04/06

BLOCK DIAGRAM
EXTERNAL NRS CONTROLLER 1.820.816

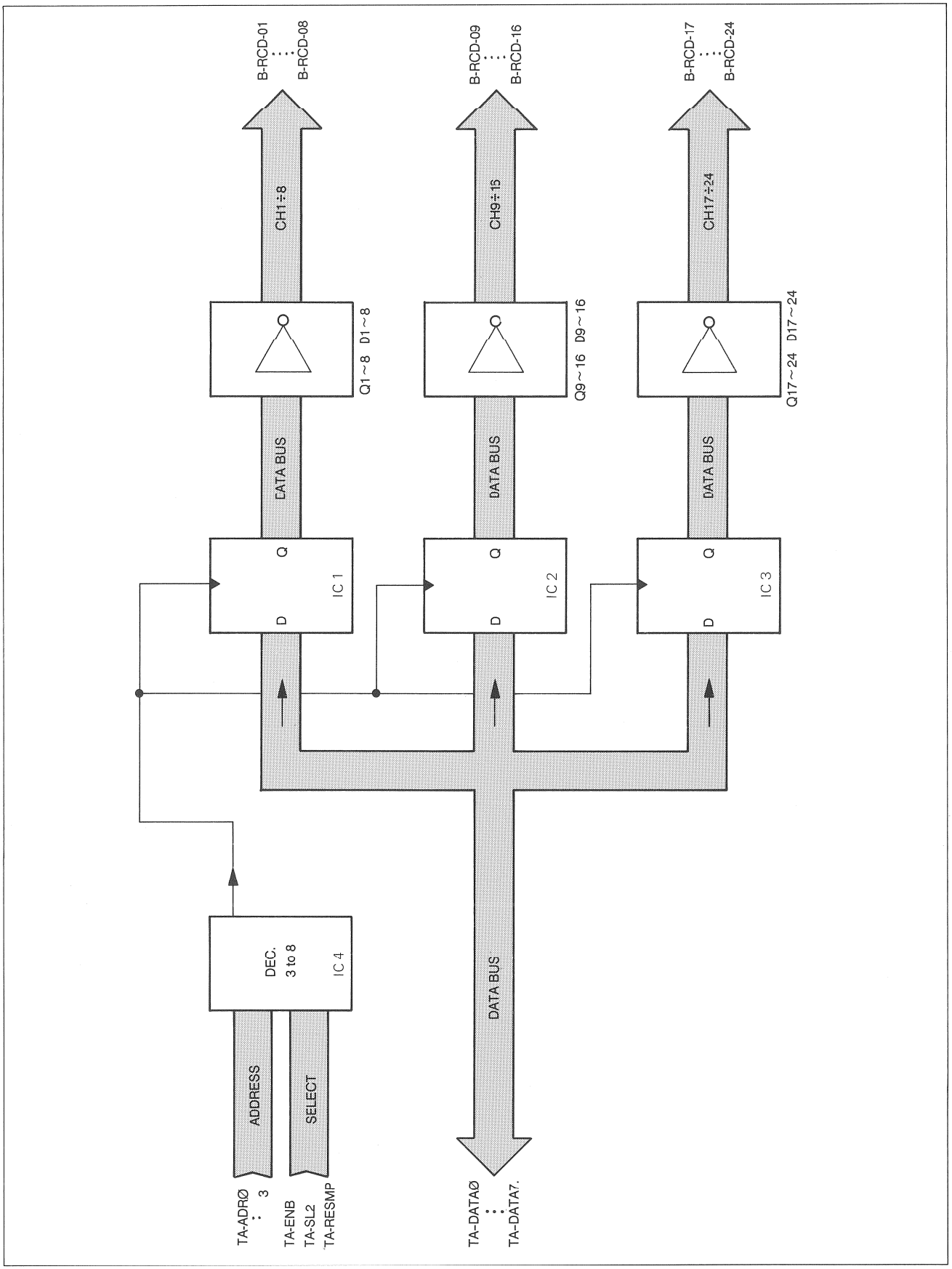

EXTERNAL NRS CONTROLLER 1.820.816.00

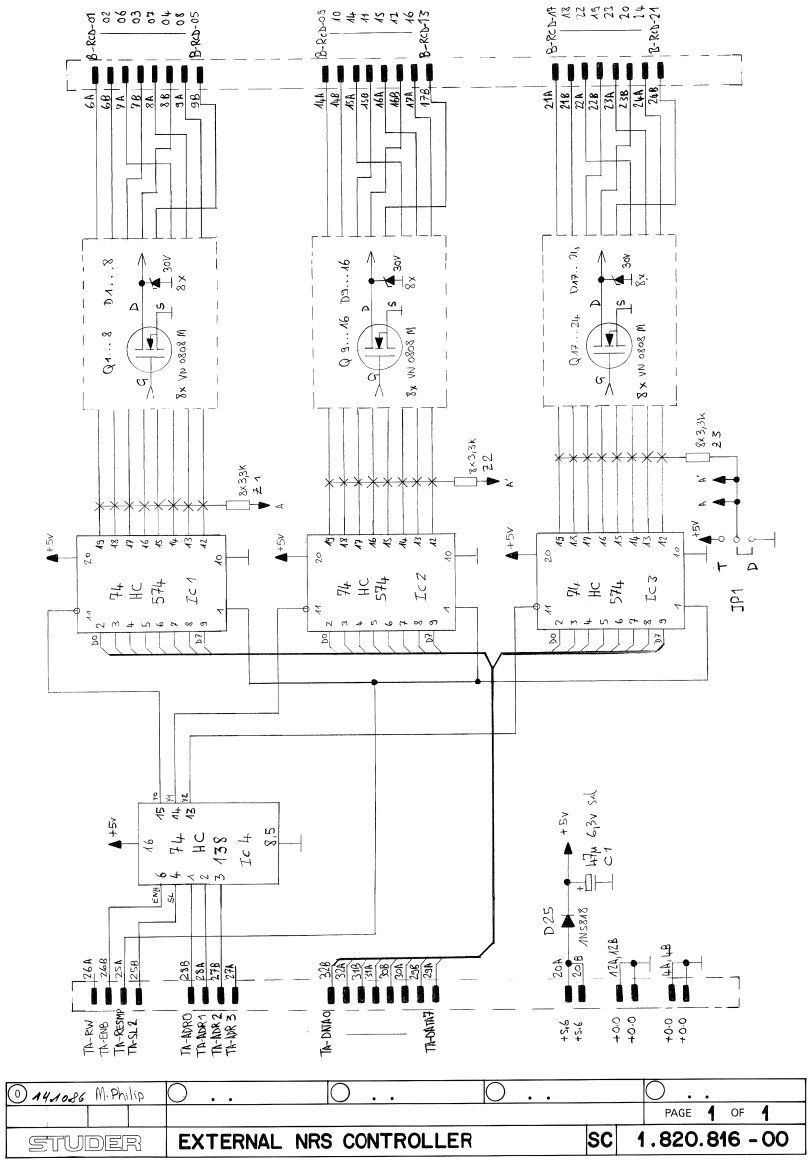

0 14.10.96 M. Philip				PAGE 1 OF 1
STUDER	EXTERNAL NRS CONTROLLER		SC	1.820.816 - 00

EXTERNAL NRS CONTROLLER 1.820.816.00

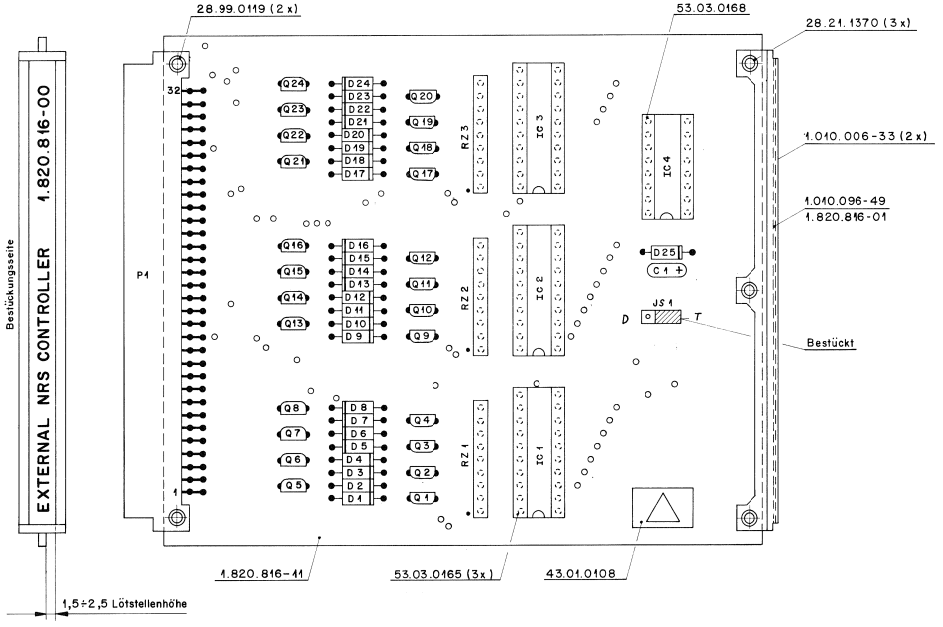

IND.	POS.NO.	PART NO.	VALUE	SPECIFICATIONS / EQUIVALENT	MANUF.
	C.....1	59.26.0470	47uF	20%, 6.3V, Sal	
	D.....1	50.04.1125	30 V Z	BZX 55-C30	ITT,Mot,Ph,Tf,Tho
	D.....2	50.04.1125	30 V Z	BZX 55-C30	ITT,Mot,Ph,Tf,Tho
	D.....3	50.04.1125	30 V Z	BZX 55-C30	ITT,Mot,Ph,Tf,Tho
	D.....4	50.04.1125	30 V Z	BZX 55-C30	ITT,Mot,Ph,Tf,Tho
	D.....5	50.04.1125	30 V Z	BZX 55-C30	ITT,Mot,Ph,Tf,Tho
	D.....6	50.04.1125	30 V Z	BZX 55-C30	ITT,Mot,Ph,Tf,Tho
	D.....7	50.04.1125	30 V Z	BZX 55-C30	ITT,Mot,Ph,Tf,Tho
	D.....8	50.04.1125	30 V Z	BZX 55-C30	ITT,Mot,Ph,Tf,Tho
	D.....9	50.04.1125	30 V Z	BZX 55-C30	ITT,Mot,Ph,Tf,Tho
	D.....10	50.04.1125	30 V Z	BZX 55-C30	ITT,Mot,Ph,Tf,Tho
	D.....11	50.04.1125	30 V Z	BZX 55-C30	ITT,Mot,Ph,Tf,Tho
	D.....12	50.04.1125	30 V Z	BZX 55-C30	ITT,Mot,Ph,Tf,Tho
	D.....13	50.04.1125	30 V Z	BZX 55-C30	ITT,Mot,Ph,Tf,Tho
	D.....14	50.04.1125	30 V Z	BZX 55-C30	ITT,Mot,Ph,Tf,Tho
	D.....15	50.04.1125	30 V Z	BZX 55-C30	ITT,Mot,Ph,Tf,Tho
	D.....16	50.04.1125	30 V Z	BZX 55-C30	ITT,Mot,Ph,Tf,Tho
	D.....17	50.04.1125	30 V Z	BZX 55-C30	ITT,Mot,Ph,Tf,Tho
	D.....18	50.04.1125	30 V Z	BZX 55-C30	ITT,Mot,Ph,Tf,Tho
	D.....19	50.04.1125	30 V Z	BZX 55-C30	ITT,Mot,Ph,Tf,Tho
	D.....20	50.04.1125	30 V Z	BZX 55-C30	ITT,Mot,Ph,Tf,Tho
	D.....21	50.04.1125	30 V Z	BZX 55-C30	ITT,Mot,Ph,Tf,Tho
	D.....22	50.04.1125	30 V Z	BZX 55-C30	ITT,Mot,Ph,Tf,Tho
	D.....23	50.04.1125	30 V Z	BZX 55-C30	ITT,Mot,Ph,Tf,Tho
	D.....24	50.04.1125	30 V Z	BZX 55-C30	ITT,Mot,Ph,Tf,Tho
	D.....25	50.04.0512	1N 5818	1N 5819	Mot
	IC....1	50.17.1574	74 HC 574		Ph,Mot,RCA,To,TI,SGS
	IC....2	50.17.1574	74 HC 574		Ph,Mot,RCA,To,TI,SGS
	IC....3	50.17.1574	74 HC 574		Ph,Mot,RCA,To,TI,SGS
	IC....4	50.17.1138	74 HC 138		Ph,Mot,RCA,To,TI,SGS
	JS....1			see note 1	
	P.....1	54.11.2004		see note 2	

IND.	POS.NO.	PART NO.	VALUE	SPECIFICATIONS / EQUIVALENT	MANUF.
	Q.....1	50.03.1505	VN 0808 M	VN 0808 MTR, ZVN 0.08 A	Fe,Six
	Q.....2	50.03.1505	VN 0808 M	VN 0808 MTR, ZVN 0.08 A	Fe,Six
	Q.....3	50.03.1505	VN 0808 M	VN 0808 MTR, ZVN 0.08 A	Fe,Six
	Q.....4	50.03.1505	VN 0808 M	VN 0808 MTR, ZVN 0.08 A	Fe,Six
	Q.....5	50.03.1505	VN 0808 M	VN 0808 MTR, ZVN 0.08 A	Fe,Six
	Q.....6	50.03.1505	VN 0808 M	VN 0808 MTR, ZVN 0.08 A	Fe,Six
	Q.....7	50.03.1505	VN 0808 M	VN 0808 MTR, ZVN 0.08 A	Fe,Six
	Q.....8	50.03.1505	VN 0808 M	VN 0808 MTR, ZVN 0.08 A	Fe,Six
	Q.....9	50.03.1505	VN 0808 M	VN 0808 MTR, ZVN 0.08 A	Fe,Six
	Q.....10	50.03.1505	VN 0808 M	VN 0808 MTR, ZVN 0.08 A	Fe,Six
	Q.....11	50.03.1505	VN 0808 M	VN 0808 MTR, ZVN 0.08 A	Fe,Six
	Q.....12	50.03.1505	VN 0808 M	VN 0808 MTR, ZVN 0.08 A	Fe,Six
	Q.....13	50.03.1505	VN 0808 M	VN 0808 MTR, ZVN 0.08 A	Fe,Six
	Q.....14	50.03.1505	VN 0808 M	VN 0808 MTR, ZVN 0.08 A	Fe,Six
	Q.....15	50.03.1505	VN 0808 M	VN 0808 MTR, ZVN 0.08 A	Fe,Six
	Q.....16	50.03.1505	VN 0808 M	VN 0808 MTR, ZVN 0.08 A	Fe,Six
	Q.....17	50.03.1505	VN 0808 M	VN 0808 MTR, ZVN 0.08 A	Fe,Six
	Q.....18	50.03.1505	VN 0808 M	VN 0808 MTR, ZVN 0.08 A	Fe,Six
	Q.....19	50.03.1505	VN 0808 M	VN 0808 MTR, ZVN 0.08 A	Fe,Six
	Q.....20	50.03.1505	VN 0808 M	VN 0808 MTR, ZVN 0.08 A	Fe,Six
	Q.....21	50.03.1505	VN 0808 M	VN 0808 MTR, ZVN 0.08 A	Fe,Six
	Q.....22	50.03.1505	VN 0808 M	VN 0808 MTR, ZVN 0.08 A	Fe,Six
	Q.....23	50.03.1505	VN 0808 M	VN 0808 MTR, ZVN 0.08 A	Fe,Six
	Q.....24	50.03.1505	VN 0808 M	VN 0808 MTR, ZVN 0.08 A	Fe,Six
	RZ....1	57.88.4332		see note 3	
	RZ....2	57.88.4332		see note 3	
	RZ....3	57.88.4332		see note 3	

Note 1 - contact pin:
Studer nr. 54.01.0020
Berg nr. 75 160-102-36
Philips nr. 2422 025 89303
bridge:
Studer nr. 54.01.0021
Berg nr. 65 474-001
Philips nr. 2422 024 88003

Note 2 - connector, 2 x 32 contacts:
Erni nr. 9722.533.406
Harting nr. 0902 164 6921
Souriau nr. 8609.264.51.13.765.000 E1

Note 3 - Network 8 x 3.3 kOhm, 5%, single line:
Allen Bradley nr. 909 A 332
Beckmann nr. L - 09 - 1 - R 3.3 k
Bourns nr. 4609 M - 101 - 332
Dale nr. CSC 09 A 01 - 332 3
Sprague nr. 256 C J 332 X2 PD
Tama nr. MRS C 09 X 3.3 kOhm G
Vitrex nr. PSE 3.3 kOhm 2%

Sal=Solid aluminium

MANUFACTURER: Fe=Ferranti, ITT=Intermetall, Mot=Motorola, Ph=Philips, RCA=RCA Corp. of America, SGS=SGS/Ates, Six=Siliconix, Tf=Telefunken, Tho=Thomson CSF, TI=Texas Instruments, To=Toshiba.

ORIG 86/10/14

BUS CONVERTER MCH 1.820.717

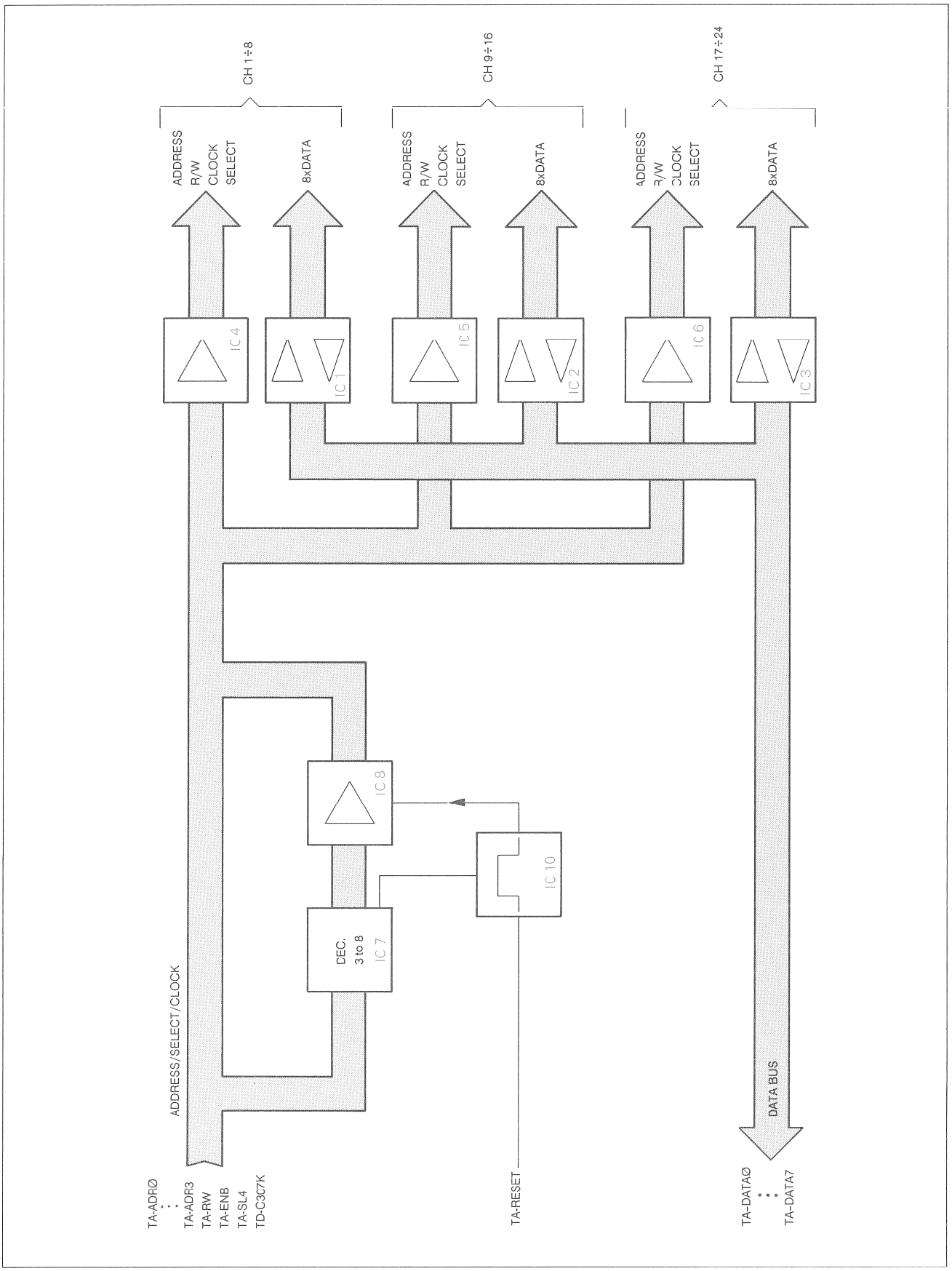

BUS CONVERTER MCH 1.820.717.00

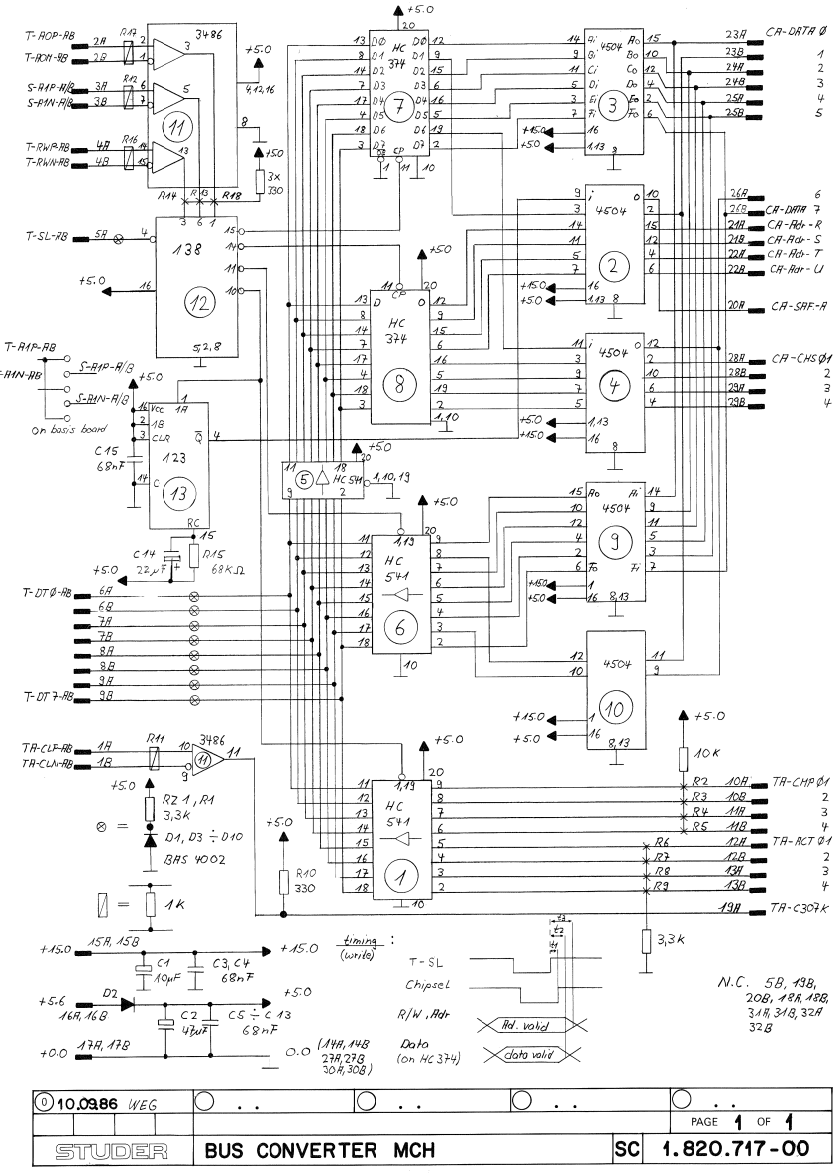

0 10.09.86 WEG				PAGE 1 OF 1
STUDER	BUS CONVERTER MCH		SC	1.820.717-00

BUS CONVERTER MCH 1.820.717.00

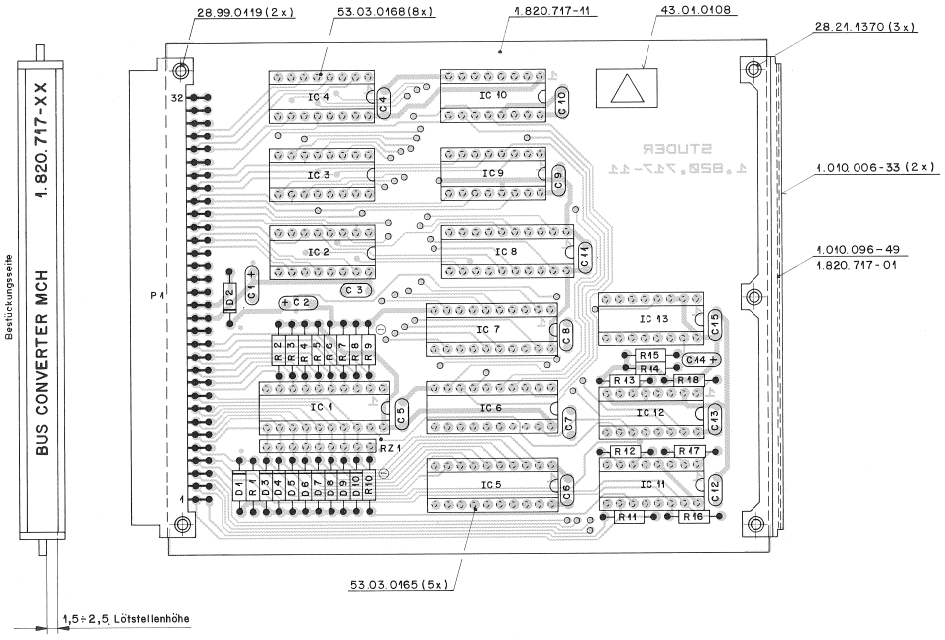

IND.	POS.NO.	PART NO.	VALUE	SPECIFICATIONS / EQUIVALENT	MANUF.
	C.....1	59.26.5100	10 uF	20%, 25 V, Sal	
	C.....2	59.26.0470	47 uF	20%, 6.3 V, Sal	
	C.....3	59.06.0683	68 nF	10%	
	C.....4	59.06.0683	68 nF	10%	
	C.....5	59.06.0683	68 nF	10%	
	C.....6	59.06.0683	68 nF	10%	
	C.....7	59.06.0683	68 nF	10%	
	C.....8	59.06.0683	68 nF	10%	
	C.....9	59.06.0683	68 nF	10%	
	C....10	59.06.0683	68 nF	10%	
	C....11	59.06.0683	68 nF	10%	
	C....12	59.06.0683	68 nF	10%	
	C....13	59.06.0683	68 nF	10%	
	C....14	59.26.1220	22 uF	20%, 10 V, Sal	
	C....15	59.06.0683	68 nF	10%	
	D.....1	50.04.0127	BAT 85	BAT 42, BAT 42, BAS 40-02	Ph,Sie,Tho
	D.....2	50.04.0512	1N 5818	1N 5819	Mot
	D.....3	50.04.0127	BAT 85	BAT 42, BAS 40-02	Ph,Sie,Tho
	D.....4	50.04.0127	BAT 85	BAT 42, BAS 40-02	Ph,Sie,Tho
	D.....5	50.04.0127	BAT 85	BAT 42, BAS 40-02	Ph,Sie,Tho
	D.....6	50.04.0127	BAT 85	BAT 42, BAS 40-02	Ph,Sie,Tho
	D.....7	50.04.0127	BAT 85	BAT 42, BAS 40-02	Ph,Sie,Tho
	D.....8	50.04.0127	BAT 85	BAT 42, BAS 40-02	Ph,Sie,Tho
	D.....9	50.04.0127	BAT 85	BAT 42, BAS 40-02	Ph,Sie,Tho
	D....10	50.04.0127	BAT 85	BAT 42, BAS 40-02	Ph,Sie,Tho
	IC....1	50.17.1541	74 HC 541		Ph,Mot,NS,RCA,To,TI
	IC....2	50.15.0103	MC 14504		Mot
	IC....3	50.15.0103	MC 14504		Mot
	IC....4	50.15.0103	MC 14504		Mot
	IC....5	50.17.1541	74 HC 541		Ph,Mot,NS,RCA,To,TI
	IC....6	50.17.1541	74 HC 541		Ph,Mot,NS,RCA,To,TI
	IC....7	50.17.1374	74 HC 374		Ph,Mot,NS,RCA,To,TI
	IC....8	50.17.1374	74 HC 374		Ph,Mot,NS,RCA,To,TI
	IC....9	50.15.0103	MC 14504		Mot
	IC....10	50.15.0103	MC 14504		Mot

IND.	POS.NO.	PART NO.	VALUE	SPECIFICATIONS / EQUIVALENT	MANUF.
	IC....11	50.15.0104	MC 3486 P		Mot,NS
	IC....12	50.17.1138	74 HC 138		Ph,Mot,NS,RCA,To,TI
	IC....13	50.17.1123	74 HC 123		Ph,Mot,NS,RCA,To,TI
	P.....1	54.11.2004		see note 1	
	R.....1	57.11.4332	3.3 kOhm	2%	
	R.....2	57.11.4103	10 kOhm	2%	
	R.....3	57.11.4103	10 kOhm	2%	
	R.....4	57.11.4103	10 kOhm	2%	
	R.....5	57.11.4103	10 kOhm	2%	
	R.....6	57.11.4332	3.3 kOhm	2%	
	R.....7	57.11.4332	3.3 kOhm	2%	
	R.....8	57.11.4332	3.3 kOhm	2%	
	R.....9	57.11.4332	3.3 kOhm	2%	
	R....10	57.11.4331	330 Ohm	2%	
	R....11	57.11.4102	1 kOhm	2%	
	R....12	57.11.4102	1 kOhm	2%	
	R....13	57.11.4331	330 Ohm	2%	
	R....14	57.11.4331	330 Ohm	2%	
	R....15	57.11.4683	68 kOhm	2%	
	R....16	57.11.4102	1 kOhm	2%	
	R....17	57.11.4102	1 kOhm	2%	
	R....18	57.11.4331	330 Ohm	2%	
	RZ....1	57.88.4332		see note 2	

IND.	POS.NO.	PART NO.	VALUE	SPECIFICATIONS / EQUIVALENT	MANUF.

Note 1 - connector, 2 * 32 contacts:
Erni nr. 9722.533.406
Harting nr. 0902 164 6921
Souriau nr. 8609.264.51.13.765.00 Ei

Note 2 - Network 8 * 3.3 kOhm, 5%, single line:
Allen Bradley nr. 909 A 332
Beckmann nr. L - 09 - 1 - R 3.3 k
Bourns nr. 4609 R - 101 - 332
Dale nr. CSC 09 A 01 - 332 G
Sprague nr. 256 C J 332 X2 PD
Tasa nr. MBG C 09 X 3.3 kOhm G
Vitrom nr. F9E 3.3 kOhm 2%

Sal=Solid aluminium

MANUFACTURER: Mot=Motorola,NS=National Semiconductor, Ph=Philips,
RCA=RCA Corp.of America, SGS=SGS / Ates, Sie=Siemens,
Tho=Thomson CSF, TI=Texas Instruments, To=Toshiba.

ORIG 86/09/10

BASIS BOARD AUDIO 1.820.703.00

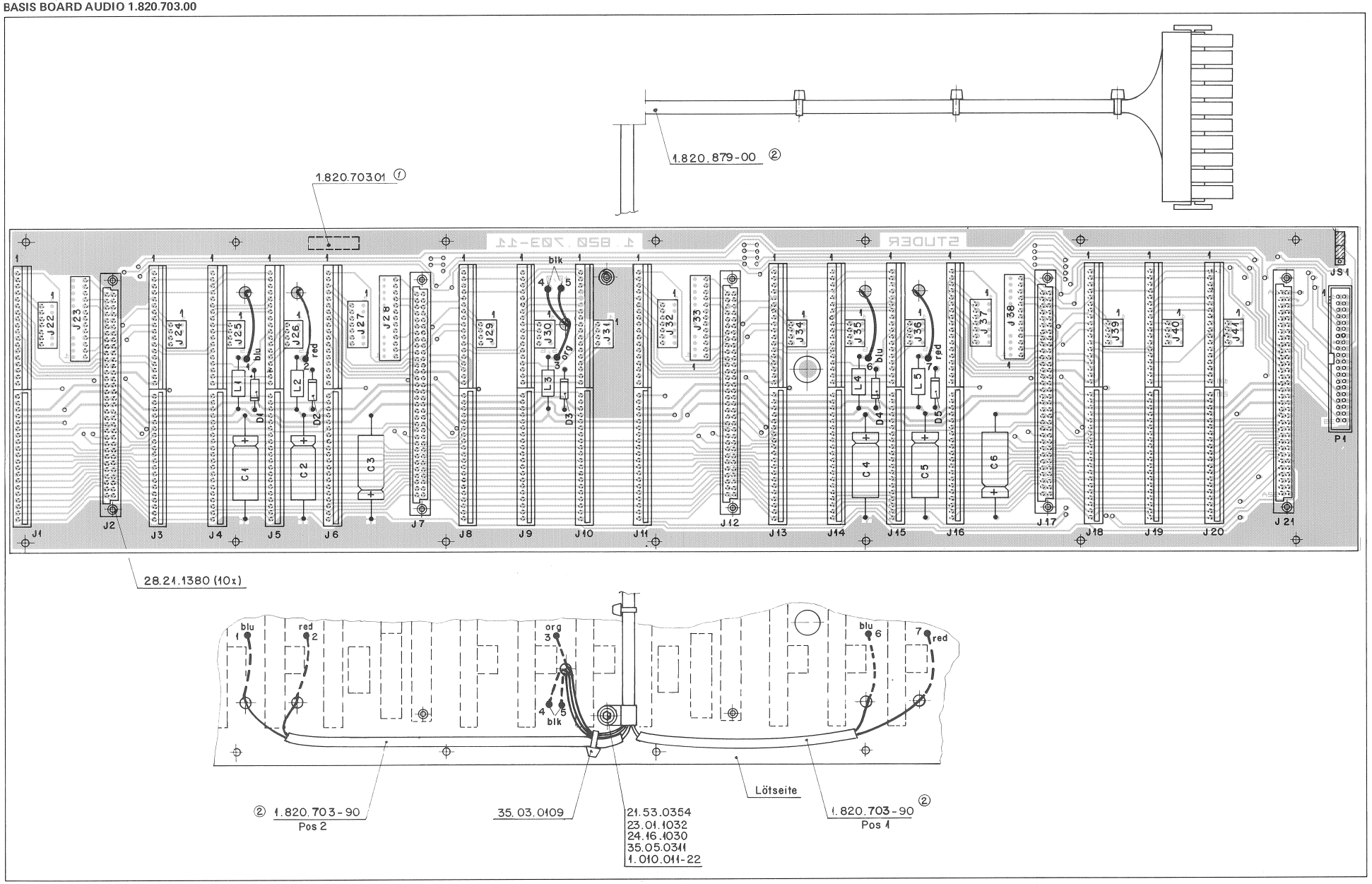

BASIS BOARD AUDIO 1.820.703.00

IND.	POS.NO.	PART NO.	VALUE	SPECIFICATIONS / EQUIVALENT	MANUF.
	C.....1	59.25.1102	1000 uF	-10%, 6.3V, El	
	C.....2	59.25.3471	470 uF	-10%, 16V, El	
	C.....3	59.25.3471	470 uF	-10%, 16V, El	
	C.....4	59.25.1102	1000 uF	-10%, 6.3V, El	
	C.....5	59.25.3471	470 uF	-10%, 16V, El	
	C.....6	59.25.3471	470 uF	-10%, 16V, El	
	D.....1	50.04.0122	1N 4001	...1N 4004	ITT,Mot
	D.....2	50.04.0122	1N 4001	...1N 4004	ITT,Mot
	D.....3	50.04.1503	7.5 V Z	BZX 85 C 7V5	See
	D.....4	50.04.0122	1N 4001	...1N 4004	ITT,Mot
	D.....5	50.04.0122	1N 4001	...1N 4004	ITT,Mot
	J.....1			18 + 20 contacts, see note 1	
	J.....2			2 * 32 contacts, see note 2	
	J.....3			18 + 20 contacts, see note 1	
	J.....4			18 + 20 contacts, see note 1	
	J.....5			18 + 20 contacts, see note 1	
	J.....6			18 + 20 contacts, see note 1	
	J.....7			2 * 32 contacts, see note 2	
	J.....8			18 + 20 contacts, see note 1	
	J.....9			18 + 20 contacts, see note 1	
	J....10			18 + 20 contacts, see note 1	
	J....11			18 + 20 contacts, see note 1	
	J....12			2 * 32 contacts, see note 2	
	J....13			18 + 20 contacts, see note 1	
	J....14			18 + 20 contacts, see note 1	
	J....15			18 + 20 contacts, see note 1	
	J....16			18 + 20 contacts, see note 1	
	J....17			2 * 32 contacts, see note 2	
	J....18			18 + 20 contacts, see note 1	
	J....19			18 + 20 contacts, see note 1	
	J....20			18 + 20 contacts, see note 1	
	J....21			2 * 32 contacts, see note 2	
	J....22	54.01.0263		7 contacts, AMP nr. 163.681-5	
	J....23	54.01.0299		13 contacts, AMP nr. 1-163.681-2	
	J....24	54.01.0298		4 contacts, AMP nr. 163.681-2	

IND.	POS.NO.	PART NO.	VALUE	SPECIFICATIONS / EQUIVALENT	MANUF.
	J....25	54.01.0298		4 contacts, AMP nr. 163.681-2	
	J....26	54.01.0298		4 contacts, AMP nr. 163.681-2	
	J....27	54.01.0263		7 contacts, AMP nr. 163.681-5	
	J....28	54.01.0299		13 contacts, AMP nr. 1-163.681-2	
	J....29	54.01.0298		4 contacts, AMP nr. 163.681-2	
	J....30	54.01.0298		4 contacts, AMP nr. 163.681-2	
	J....31	54.01.0298		4 contacts, AMP nr. 163.681-2	
	J....32	54.01.0263		7 contacts, AMP nr. 163.681-5	
	J....33	54.01.0299		13 contacts, AMP nr. 1-163.681-2	
	J....34	54.01.0298		4 contacts, AMP nr. 163.681-2	
	J....35	54.01.0298		4 contacts, AMP nr. 163.681-2	
	J....36	54.01.0298		4 contacts, AMP nr. 163.681-2	
	J....37	54.01.0263		7 contacts, AMP nr. 163.681-5	
	J....38	54.01.0299		13 contacts, AMP nr. 1-163.681-2	
	J....39	54.01.0298		4 contacts, AMP nr. 163.681-2	
	J....40	54.01.0298		4 contacts, AMP nr. 163.681-2	
	J....41	54.01.0298		4 contacts, AMP nr. 163.681-2	
	JS....1			see note 3	
	L.....1	62.01.0115		HF-coil, Philips nr. 4312 020 36700	
	L.....2	62.01.0115		HF-coil, Philips nr. 4312 020 36700	
	L.....3	62.01.0115		HF-coil, Philips nr. 4312 020 36700	
	L.....4	62.01.0115		HF-coil, Philips nr. 4312 020 36700	
	L.....5	62.01.0115		HF-coil, Philips nr. 4312 020 36700	
	P.....1			40 contacts, see note 4	
	P.....2			10 contacts, see note 5	

IND.	POS.NO.	PART NO.	VALUE	SPECIFICATIONS / EQUIVALENT	MANUF.

Note 1 - 2 connectors, 18 contacts: Studer nr. 54.10.2015
Burndy nr. GCSB 18 SO 19 V1 K9
20 contacts: Studer nr. 54.10.2026
Burndy nr. GCSB 20 SO V1 K9

Note 2 - connector, 2 * 32 contacts: Studer nr. 54.11.2005
Burndy nr. FI 64 B 20 R00 A00 Z0
Philips nr. 2422 025 89297
Erni nr. 9722.543.616

Note 3 - contact pin (5 pieces): Studer nr. 54.01.0020
Berg nr. 7S 160-102-36
Philips nr. 2422 025 89303
bridge (2 pieces): Studer nr. 54.01.0021
Berg nr. 65 474-001
Philips nr. 2422 024 88003

Note 4 - connector, 40 contacts: Studer nr. 54.14.2004
Yamaichi nr. FAP-40-08/4
Burndy nr. RFM 9 B 40 B00 GS

Note 5 - connector, 10 contacts, case: Studer nr. 54.25.0310
AMP nr. 926302-3
pin: Studer nr. 54.25.0401
AMP nr. 926887-1

El=Electrolytic

MANUFACTURER: ITT=ITT Intermetall, Mot=Motorola, Sws=Swscosem.

ORIG 86/10/16

DISTRIBUTION BOARD AUDIO RACK 1.820.778.82

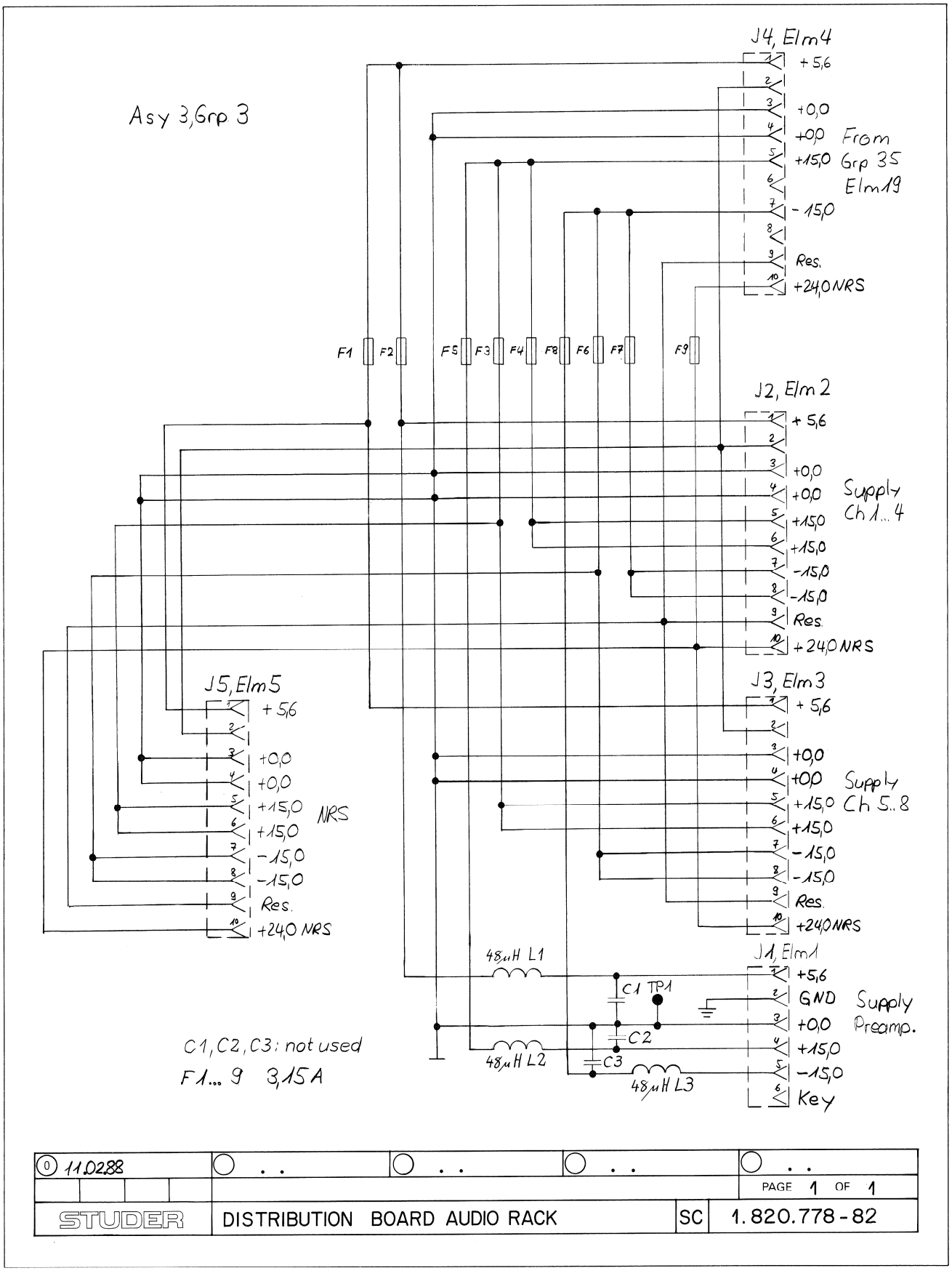

0 11.02.88	. .	. .	. .	. .
				PAGE 1 OF 1
STUDER	DISTRIBUTION BOARD AUDIO RACK		SC	1.820.778-82

DISTRIBUTION BOARD AUDIO RACK 1.820.778.82

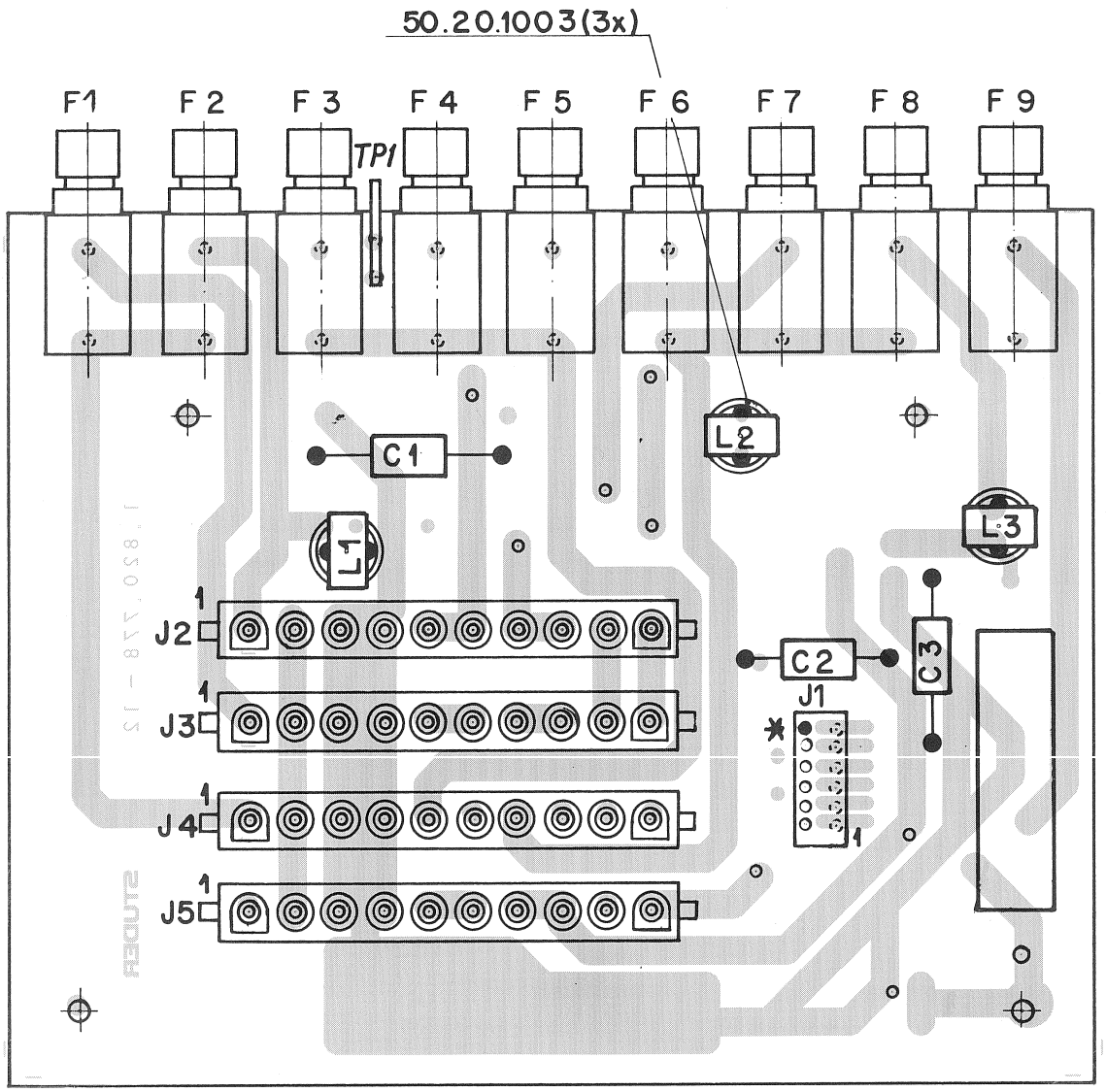

IND.	POS.NO.	PART NO.	VALUE	SPECIFICATIONS / EQUIVALENT	MANUF.
	C.....1		not used		
	C.....2		not used		
	C.....3		not used		
	F.....1	51.01.0122	3.15 A	slow blow, Fuse holder see note 1	
	F.....2	51.01.0122	3.15 A	slow blow, Fuse holder see note 1	
	F.....3	51.01.0122	3.15 A	slow blow, Fuse holder see note 1	
	F.....4	51.01.0122	3.15 A	slow blow, Fuse holder see note 1	
	F.....5	51.01.0122	3.15 A	slow blow, Fuse holder see note 1	
	F.....6	51.01.0122	3.15 A	slow blow, Fuse holder see note 1	
	F.....7	51.01.0122	3.15 A	slow blow, Fuse holder see note 1	
	F.....8	51.01.0122	3.15 A	slow blow, Fuse holder see note 1	
	F.....9	51.01.0122	3.15 A	slow blow, Fuse holder see note 1	
	J.....1	54.01.0216		6 Contacts AMP nr. 163.680-4	
	J.....2	54.25.0010		10 Contacts AMP nr. 826852-3	
	J.....3	54.25.0010		10 Contacts AMP nr. 826852-3	
	J.....4	54.25.0010		10 Contacts AMP nr. 826852-3	
	J.....5	54.25.0010		10 Contacts AMP nr. 826852-3	
	L.....1	62.03.0010	48 uH	2 A, Tokin nr. SN - 5 - 400	
	L.....2	62.03.0010	48 uH	2 A, Tokin nr. SN - 5 - 400	
	L.....3	62.03.0010	48 uH	2 A, Tokin nr. SN - 5 - 400	
	TP....1	54.02.0328		Testpoint	

PETP=Polyesterfilm

Note 1 - Fuse holder:
Studer Nr. 53.03.0118
Schurter Nr. FAS 031.3501

ORIG 88/02/11

S T U D E R (00) 88/02/11 BD DISTRIBUTION BOARD AUDIO RACK PL 1.820.778.82 PAGE 1

LEVEL DIAGRAMS LINE AMPLIFIER

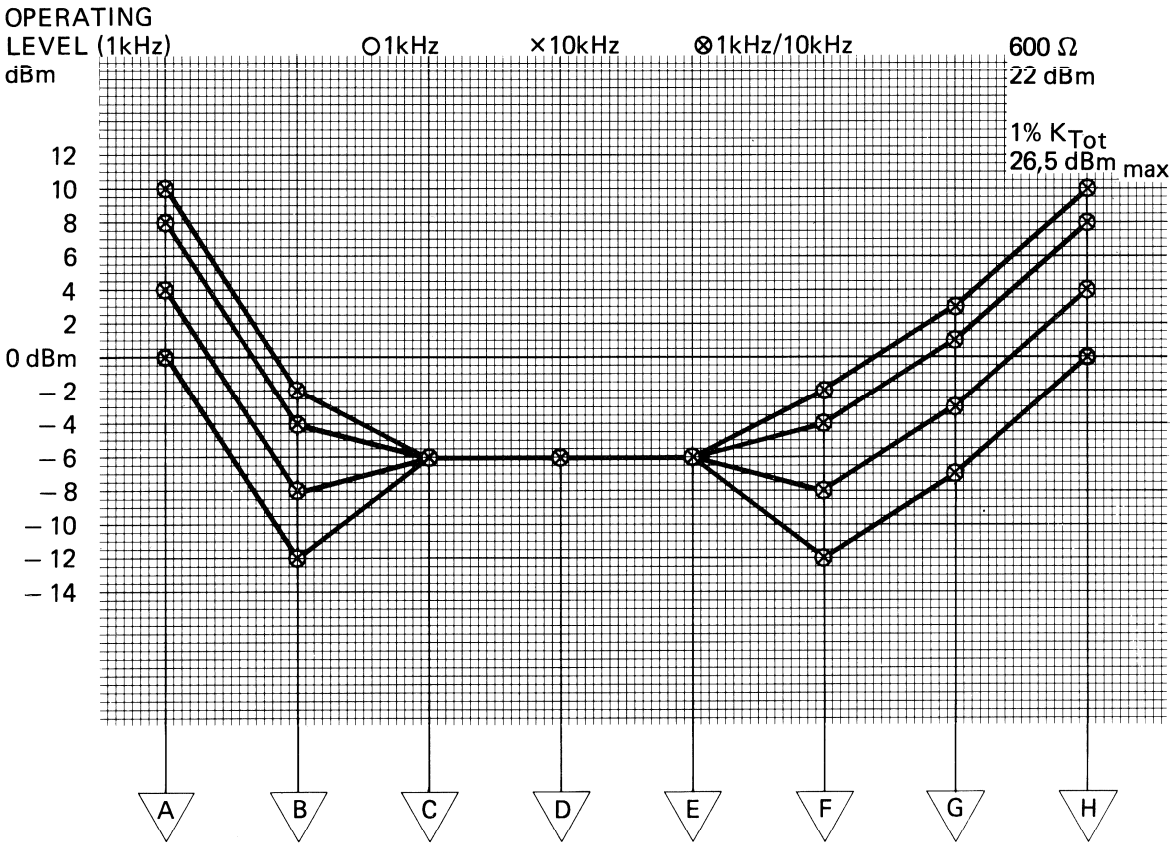

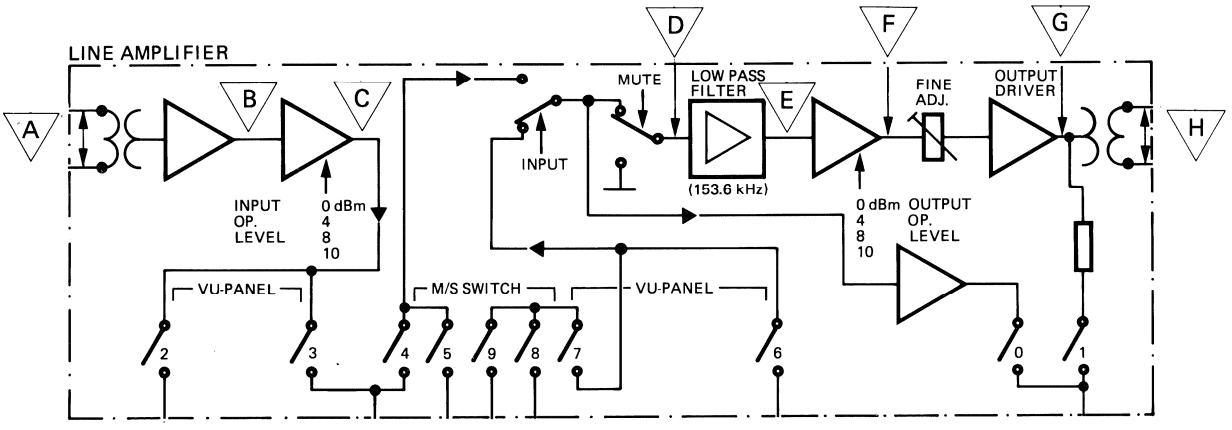

LINE AMPLIFIER 1.820.714.83

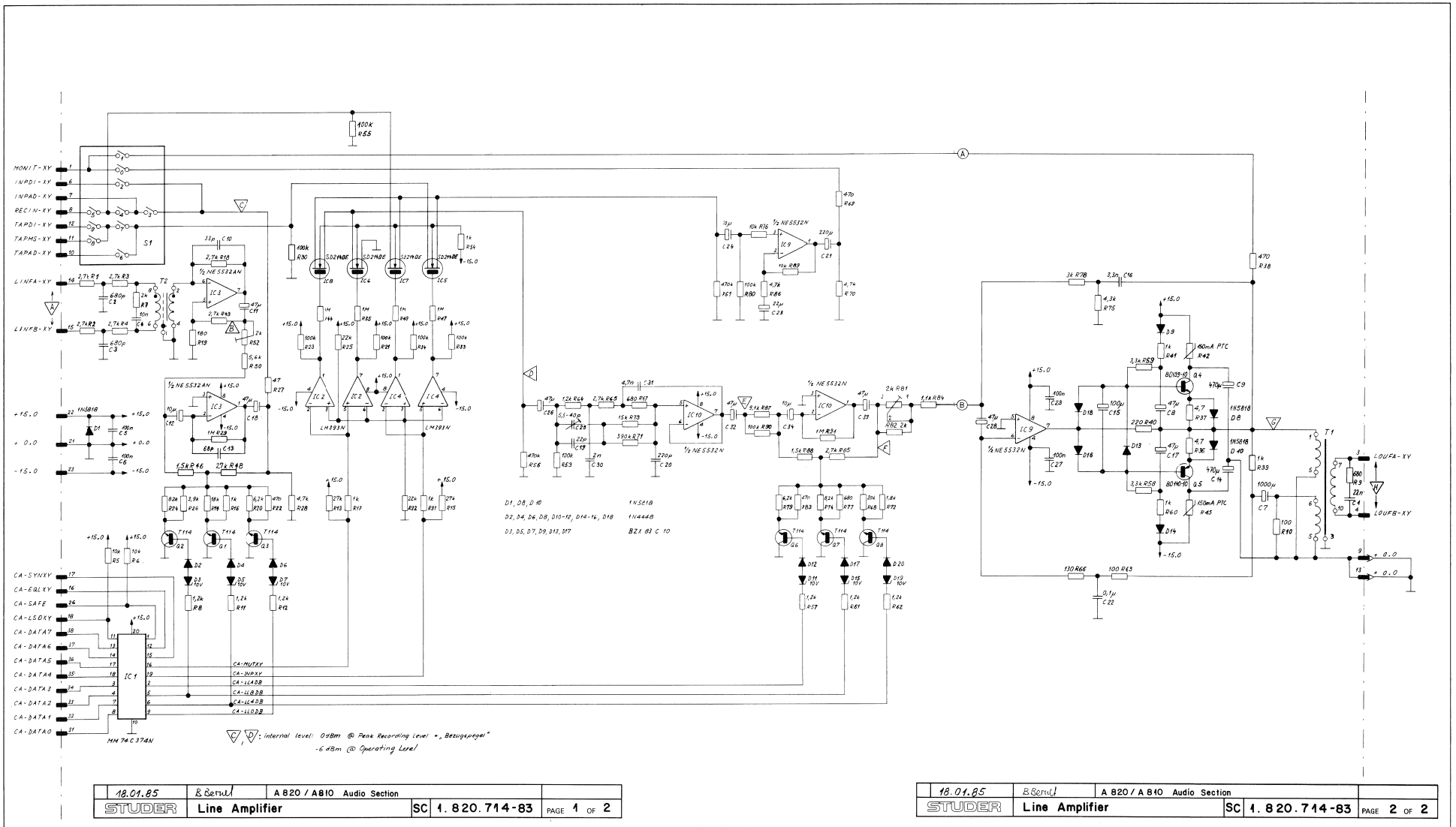

18.01.85	B.Bernet	A 820 / A810 Audio Section			
STUDER	Line Amplifier	SC	1.820.714-83	PAGE 1 OF 2	

18.01.85	B.Bernet	A 820 / A 810 Audio Section			
STUDER	Line Amplifier	SC	1.820.714-83	PAGE 2 OF 2	

LINE AMPLIFIER 1.820.714.83

COMPONENT SIDE

LINE AMPLIFIER WITH TRAFO 4.820.714-82

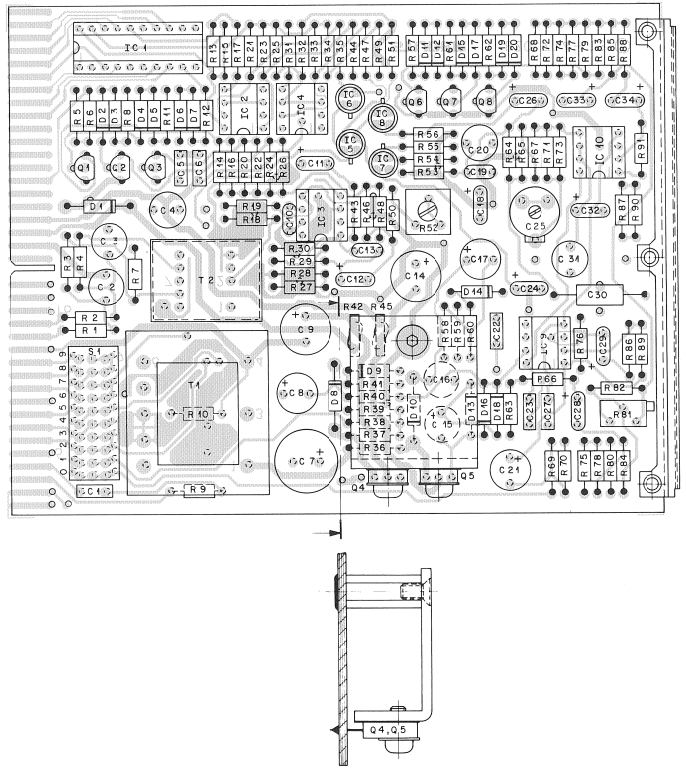

IND.	POS.NO.	PART NO.	VALUE	SPECIFICATIONS / EQUIVALENT	MANUF.
	C..0001	59.06.0223	22 nF	10%	
	C..0002	59.05.1681	680 pF	1%	
	C..0003	59.05.1681	680 pF	1%	
	C..0004	59.05.1103	10 nF	1%	
	C..0005	59.06.0104	100 nF	20%, PETP	
	C..0006	59.06.0104	100 nF	20%, PETP	
	C..0007	59.22.2102	1000 uF	-10%, 6V, El	
	C..0008	59.22.6470	47 uF	-10%, 40V, El	
	C..0009	59.22.4471	470 uF	-10%, 16V, El	
	C..0010	59.34.2330	33 pF	5%, N150, Ce	
	C..0011	59.26.0470	47 uF	20%, 6.3V, Sal	Ph
	C..0012	59.26.2100	10 uF	20%, 16V, Sal	Ph
	C..0013	59.34.2680	68 pF	5%, N150, Ce	
	C..0014	59.22.4471	470 uF	-10%, 16V, El	
	C..0015	59.22.3101	100 uF	-10%, 10V, El	
	C..0016	59.05.1332	3300 pF	1%	
	C..0017	59.22.6470	47 uF	-10%, 40V, El	
(00)	C..0018	59.26.0470	47 uF	20%, 6.3V, Sal	Ph
(01)	C..0018	59.99.0401	47 uF	20%, 16V, El bipolar	
	C..0019	59.34.2220	22 pF	5%, N150, Ce	
	C..0020	59.05.1221	220 pF	1%	
	C..0021	59.22.2221	220 uF	-10%, 6V, El	
	C..0022	59.06.5104	0.1 uF	5%	
	C..0023	59.06.0104	100 nF	20%, PETP	
	C..0024	59.26.2100	10 uF	20%, 16V, Sal	Ph
	C..0025	59.18.0108	40 pF	Trimmer capacitor, Philips Nr 2222 808 32409	
	C..0026	59.26.0470	47 uF	20%, 6.3V, Sal	Ph
	C..0027	59.06.0104	100 nF	20%, PETP	
	C..0028	59.26.0470	47 uF	20%, 6.3V, Sal	Ph
	C..0029	59.26.1220	22 uF	20%, 10V, Sal	Ph
	C..0030	59.12.7202	2 nF	1%	
	C..0031	59.05.1472	4.7 nF	1%	
	C..0032	59.26.0470	47 uF	20%, 6.3V, Sal	Ph
	C..0033	59.26.0470	47 uF	20%, 6.3V, Sal	Ph
	C..0034	59.26.2100	10 uF	20%, 16V, Sal	Ph
	D..0001	50.04.0512	1N5818		Mot

IND.	POS.NO.	PART NO.	VALUE	SPECIFICATIONS / EQUIVALENT	MANUF.
	D..0002	50.04.0125	1N4448		ITT-Ph-Sem
	D..0003	50.04.1114	10V Z	5%	ITT-Sem
	D..0004	50.04.0125	1N4448		ITT-Ph-Sem
	D..0005	50.04.1114	10V Z	5%	ITT-Sem
	D..0006	50.04.0125	1N4448		ITT-Ph-Sem
	D..0007	50.04.1114	10V Z	5%	ITT-Sem
	D..0008	50.04.0512	1N5818		Mot
	D..0009	50.04.0125	1N4448		ITT-Ph-Sem
	D..0010	50.04.0512	1N5818		Mot
	D..0011	50.04.1114	10V Z	5%	ITT-Sem
	D..0012	50.04.0125	1N4448		ITT-Ph-Sem
	D..0013	50.04.0125	1N4448		ITT-Ph-Sem
	D..0014	50.04.0125	1N4448		ITT-Ph-Sem
	D..0015	50.04.1114	10V Z	5%	ITT-Sem
	D..0016	50.04.0125	1N4448		ITT-Ph-Sem
	D..0017	50.04.0125	1N4448		ITT-Ph-Sem
	D..0018	50.04.0125	1N4448		ITT-Ph-Sem
	D..0019	50.04.1114	10V Z	5%	ITT-Sem
	D..0020	50.04.0125	1N4448		ITT-Ph-Sem
	IC.0001	50.07.0003	MM74C374N		NS
	IC.0002	50.05.0283	LM393N		TI,NS
	IC.0003	50.09.0106	NE5532AN	XR5532AN, 5532ANB	Sig,Ex,Ra
	IC.0004	50.05.0283	LM393N		TI,NS
	IC.0005	50.11.0106	SD 214 DE	BSD 214	Ph,Six
	IC.0006	50.11.0106	SD 214 DE	BSD 214	Ph,Six
	IC.0007	50.11.0106	SD 214 DE	BSD 214	Ph,Six
	IC.0008	50.11.0106	SD 214 DE	BSD 214	Ph,Six
	IC.0009	50.09.0105	NE5532N	XR5532N, 5532NB	Sig,Ex,Ra
	IC.0010	50.09.0105	NE5532N	XR5532N, 5532NB	Sig,Ex,Ra
	Q..0001	1.010.034.50	T 114 sel	See Note 1	Sie
	Q..0002	1.010.034.50	T 114 sel	See Note 1	Sie
	Q..0003	1.010.034.50	T 114 sel	See Note 1	Sie
	Q..0004	50.03.0451	BD139-10	NPN	Ph,Sie,Tf
	Q..0005	50.03.0452	BD140-10	PNP	Ph,Sie,Tf
	Q..0006	1.010.034.50	T 114 sel	See Note 1	Sie

IND.	POS.NO.	PART NO.	VALUE	SPECIFICATIONS / EQUIVALENT	MANUF.
	Q..0007	1.010.034.50	T 114 sel	See Note 1	Sie
	Q..0008	1.010.034.50	T 114 sel	See Note 1	Sie
	R..0001	57.11.3272	2.7 kOhm	1%	
	R..0002	57.11.3272	2.7 kOhm	1%	
	R..0003	57.11.3272	2.7 kOhm	1%	
	R..0004	57.11.3272	2.7 kOhm	1%	
	R..0005	57.11.4103	10 kOhm	5%	
	R..0006	57.11.4103	10 kOhm	5%	
	R..0007	57.11.3202	2 kOhm	1%	
	R..0008	57.11.4122	1.2 kOhm	5%	
	R..0009	57.11.3681	680 Ohm	1%	
	R..0010	57.11.4101	100 Ohm	5%	
	R..0011	57.11.4122	1.2 kOhm	5%	
	R..0012	57.11.4122	1.2 kOhm	5%	
	R..0013	57.11.4273	27 kOhm	5%	
	R..0014	57.11.4183	18 kOhm	5%	
	R..0015	57.11.4273	27 kOhm	5%	
	R..0016	57.11.4102	1 kOhm	2%	
	R..0017	57.11.4102	1 kOhm	5%	
	R..0018	57.11.4272	2.7 kOhm	2%	
	R..0019	57.11.4181	180 Ohm	2%	
	R..0020	57.11.3622	6.2 kOhm	5%	
	R..0021	57.11.4104	100 kOhm	5%	
	R..0022	57.11.4471	470 Ohm	2%	
	R..0023	57.11.4104	100 kOhm	5%	
	R..0024	57.11.4823	82 kOhm	5%	
	R..0025	57.11.4223	22 kOhm	5%	
	R..0026	57.11.4392	3.9 kOhm	2%	
	R..0027	57.11.4470	47 Ohm	5%	
	R..0028	57.11.4472	4.7 kOhm	5%	
	R..0029	57.11.4105	1 MOhm	5%	
	R..0030	57.11.4104	100 kOhm	5%	
	R..0031	57.11.4102	1 kOhm	5%	
	R..0032	57.11.4223	22 kOhm	5%	
	R..0033	57.11.4104	100 kOhm	5%	
	R..0034	57.11.4104	100 kOhm	5%	

IND.	POS.NO.	PART NO.	VALUE	SPECIFICATIONS / EQUIVALENT	MANUF.
	R..0035	57.11.4105	1 MOhm	5%	
	R..0036	57.11.4479	4.7 Ohm	5%	
	R..0037	57.11.4479	4.7 Ohm	5%	
	R..0038	57.11.4471	470 Ohm	5%	
	R..0039	57.11.4102	1 kOhm	5%	
	R..0040	57.11.4221	220 Ohm	5%	
	R..0041	57.11.4102	1 kOhm	5%	
	R..0042	57.92.1151	150 mA	See Note 2	
	R..0043	57.11.4272	2.7 kOhm	2%	
	R..0044	57.11.4105	1 MOhm	5%	
	R..0045	57.92.1151	150 mA	See Note 2	
	R..0046	57.11.4152	1.5 kOhm	2%	
	R..0047	57.11.4105	1 MOhm	5%	
	R..0048	57.11.4272	2.7 kOhm	2%	
	R..0049	57.11.4105	1 MOhm	5%	
	R..0050	57.11.4562	5.6 kOhm	5%	
	R..0051	57.11.4474	470 kOhm	5%	
	R..0052	58.01.8202	2 kOhm	See Note 3	
	R..0053	57.11.4104	100 kOhm	5%	
	R..0054	57.11.4102	1 kOhm	5%	
	R..0055	57.11.4104	100 kOhm	5%	
	R..0056	57.11.4474	470 kOhm	5%	
	R..0057	57.11.4122	1.2 kOhm	5%	
	R..0058	57.11.4332	3.3 kOhm	5%	
	R..0059	57.11.4332	3.3 kOhm	5%	
	R..0060	57.11.4102	1 kOhm	5%	
	R..0061	57.11.4122	1.2 kOhm	5%	
	R..0062	57.11.4122	1.2 kOhm	5%	
	R..0063	57.11.4101	100 Ohm	2%	
	R..0064	57.11.4122	1.2 kOhm	2%	
	R..0065	57.11.4272	2.7 kOhm	2%	
	R..0066	57.11.3131	130 Ohm	1%	
	R..0067	57.11.4681	680 Ohm	2%	
	R..0068	57.11.3203	20 kOhm	5%	
	R..0069	57.11.4471	470 Ohm	5%	
	R..0070	57.11.4472	4.7 kOhm	5%	
	R..0071	57.11.4394	390 kOhm	5%	

IND.	POS.NO.	PART NO.	VALUE	SPECIFICATIONS / EQUIVALENT	MANUF.
	R..0072	57.11.41B2	1.8 kOhm	2%	
	R..0073	57.11.3153	15 kOhm	1%	
	R..0074	57.11.4822	8.2 kOhm	5%	
	R..0075	57.11.3432	4.3 kOhm	1%	
	R..0076	57.11.4103	10 kOhm	5%	
	R..0077	57.11.3681	680 Ohm	1%	
	R..0078	57.11.3302	3 kOhm	1%	
	R..0079	57.11.3622	6.2 kOhm	5%	
	R..0080	57.11.4104	100 kOhm	5%	
	R..0081	58.05.0202	2 kOhm	See Note 4	
	R..0082	57.11.3202	2 kOhm	1%	
	R..0083	57.11.4471	470 Ohm	2%	
	R..0084	57.11.3112	1.1 kOhm	1%	
	R..0085	57.11.4272	2.7 kOhm	2%	
	R..0086	57.11.4472	4.7 kOhm	2%	
	R..0087	57.11.3912	9.1 kOhm	1%	
	R..0088	57.11.4152	1.5 kOhm	2%	
	R..0089	57.11.4103	10 kOhm	2%	
	R..0090	57.11.4104	100 kOhm	5%	
	R..0091	57.11.4105	1 MOhm	5%	
	S.1/0-9	55.01.0170		SAE-Nr. 1010-692	
	T..0001	1.022.360.00		Output Transformer	St
	T..0002	1.022.419.00		Input Transformer 1:1	St

IND.	POS.NO.	PART NO.	VALUE	SPECIFICATIONS / EQUIVALENT	MANUF.

(01) 85.11.21. Inproved reliability.

Note 1 - T 114 sel. for invers mode (iBC = 3 mA)
VCE < 0,7 aV, iE 0 mA. VCE < 25 aV, iE 4 mA

Note 2 - 150 mA PTC-Resistor
Philips Nr. 2322 661 11511
PTC-Resistor may be replaced by Fuse-Resistor
57.19.0180, Philips Nr. 2322 205 13189.

Note 3 - 2 kOhm Potentiometer lin., 10%
Bourns Nr. 3386 F-1-202
Allen Bradley Nr. E 2 B 202
Spectrol Nr. 63 M 202 T010

Note 4 - 2 kOhm Potentiometer lin., 10%
Bourns Nr. 3296 Z - 1 - 202
Spectrol Nr. 64 Z 202 T 000
Murata Nr. POT 3105 Z - 1 - 202
Contelec Nr. 183 XZ 202

Ce=Ceramic, El=Electrolytic, Sal=Solid aluminium

MANUFACTURER: Ex=Exar, ITT=Intermetall, Mot=Motorola,
NS=National Semiconductor, Ph=Philips, Ra=Raytheon,
Sie=Seecosa, Sie=Siemens, Sig=Signetics, Six=Siliconix,
St=Studer, Tf=Telefunken, TI=Texas Instruments.

ORIG 85/06/20 (01) 85/11/21

LINE AMPLIFIER 1.820.714.84

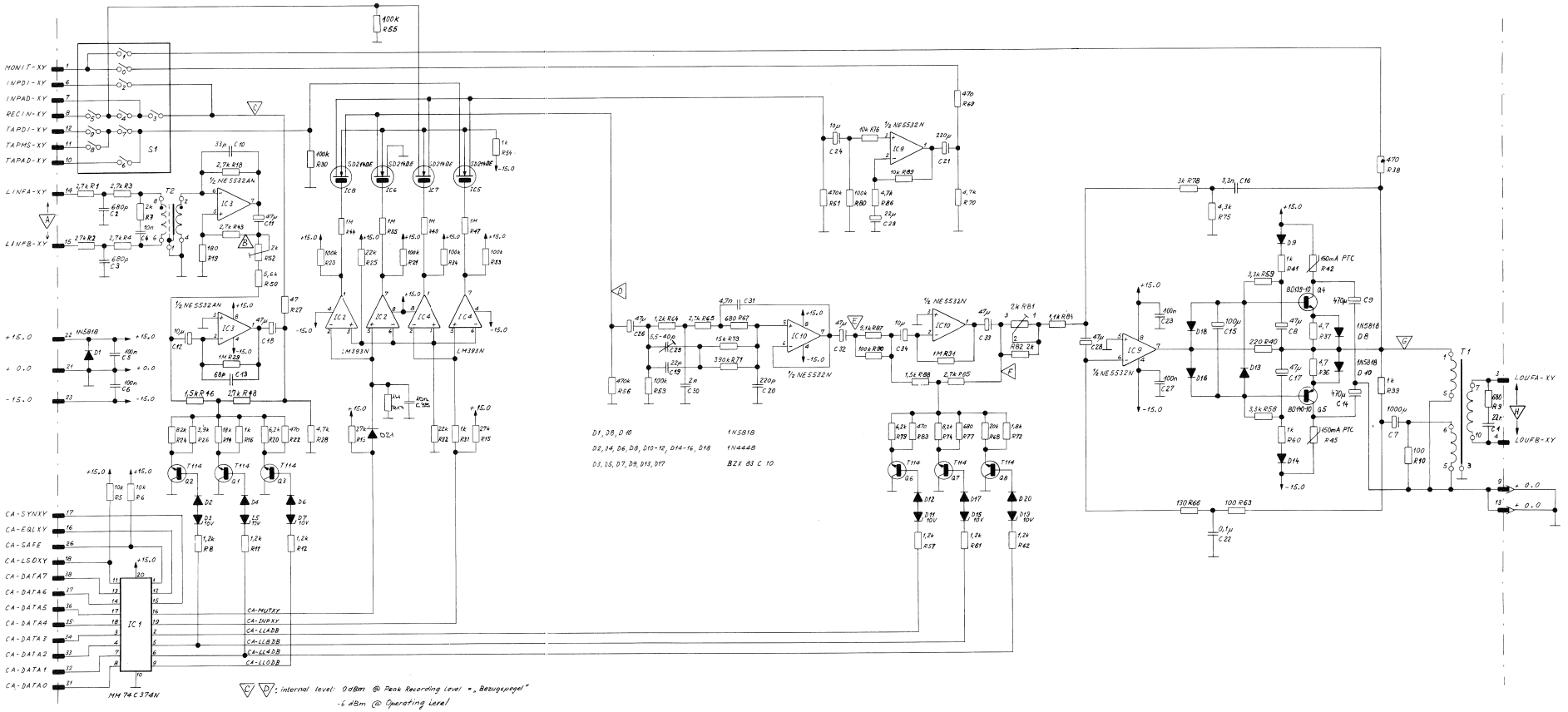

20.06.85	B.Bernet	A 820 / A 810 Audio Section		
STUDER	Line Amplifier	SC	1.820.714-84	PAGE 1 OF 2

20.06.85	B.Bernet	A 820 / A 810 Audio Section		
STUDER	Line Amplifier	SC	1.820.714-84	PAGE 2 OF 2

LINE AMPLIFIER 1.820.714.84

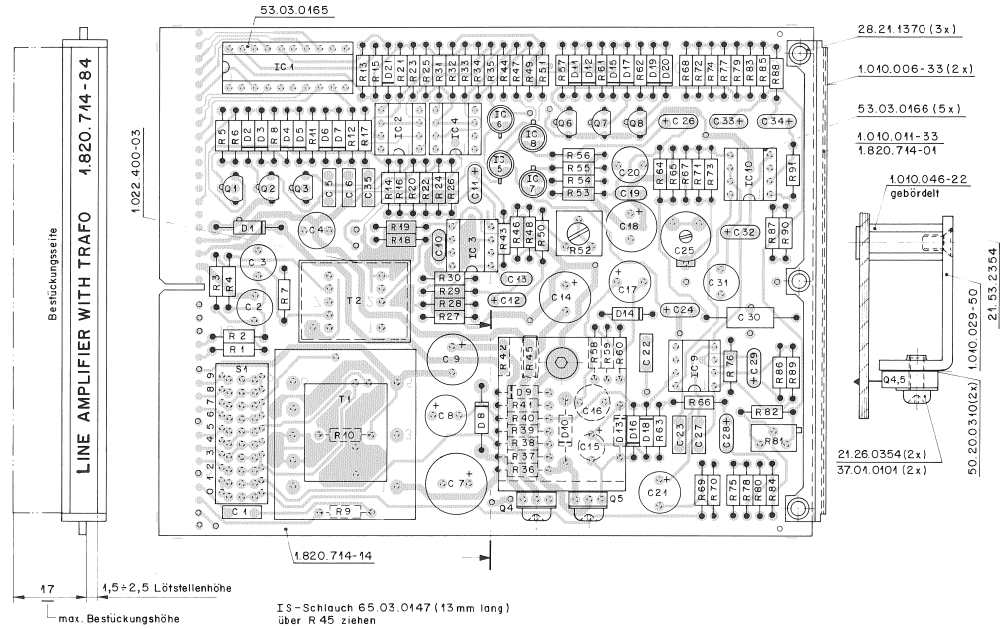

IND.	POS.NO.	PART NO.	VALUE	SPECIFICATIONS / EQUIVALENT	MANUF.
	R..0034	57.11.3104	100 kOhm	5%	
	R..0035	57.11.3105	1 MOhm	5%	
	R..0036	57.11.3479	4.7 Ohm	5%	
	R..0037	57.11.3479	4.7 Ohm	5%	
	R..0038	57.11.3471	470 Ohm	5%	
	R..0039	57.11.3102	1 kOhm	5%	
	R..0040	57.11.3221	220 Ohm	5%	
	R..0041	57.11.3102	1 kOhm	5%	
	R..0042	57.92.1151	150 mA	See Note 2	
	R..0043	57.11.3272	2.7 kOhm	2%	
	R..0044	57.11.3105	1 MOhm	5%	
	R..0045	57.92.1151	150 mA	See Note 2	
	R..0046	57.11.3152	1.5 kOhm	2%	
	R..0047	57.11.3105	1 MOhm	5%	
	R..0048	57.11.3272	2.7 kOhm	2%	
	R..0049	57.11.3105	1 MOhm	5%	
	R..0050	57.11.3562	5.6 kOhm	5%	
	R..0051	57.11.3474	470 kOhm	5%	
	R..0052	58.01-8202	2 kOhm	See Note 3	
	R..0053	57.11.3104	100 kOhm	5%	
	R..0054	57.11.3102	1 kOhm	5%	
	R..0055	57.11.3104	100 kOhm	5%	
	R..0056	57.11.3474	470 kOhm	5%	
	R..0057	57.11.3122	1.2 kOhm	5%	
	R..0058	57.11.3332	3.3 kOhm	5%	
	R..0059	57.11.3332	3.3 kOhm	5%	
	R..0060	57.11.3102	1 kOhm	5%	
	R..0061	57.11.3122	1.2 kOhm	5%	
	R..0062	57.11.3122	1.2 kOhm	5%	
	R..0063	57.11.3101	100 Ohm	2%	
	R..0064	57.11.3122	1.2 kOhm	2%	
	R..0065	57.11.3272	2.7 kOhm	2%	
	R..0066	57.11.3131	130 Ohm	1%	
	R..0067	57.11.3681	680 Ohm	2%	
	R..0068	57.11.3203	20 kOhm	5%	
	R..0069	57.11.3471	470 Ohm	5%	
	R..0070	57.11.3472	4.7 kOhm	5%	

IND.	POS.NO.	PART NO.	VALUE	SPECIFICATIONS / EQUIVALENT	MANUF.
	R..0071	57.11.3394	390 kOhm	5%	
	R..0072	57.11.3182	1.8 kOhm	2%	
	R..0073	57.11.3153	15 kOhm	1%	
	R..0074	57.11.3822	8.2 kOhm	5%	
	R..0075	57.11.3432	4.3 kOhm	1%	
	R..0076	57.11.3103	10 kOhm	5%	
	R..0077	57.11.3681	680 Ohm	1%	
	R..0078	57.11.3302	3 kOhm	1%	
	R..0079	57.11.3622	6.2 kOhm	5%	
	R..0080	57.11.3104	100 kOhm	5%	
	R..0081	58.05-8202	2 kOhm	See Note 4	
	R..0082	57.11.3202	2 kOhm	5%	
	R..0083	57.11.3471	470 Ohm	2%	
	R..0084	57.11.3112	1.1 kOhm	5%	
	R..0085	57.11.3272	2.7 kOhm	2%	
	R..0086	57.11.3472	4.7 kOhm	2%	
	R..0087	57.11.3912	9.1 kOhm	1%	
	R..0088	57.11.3152	1.5 kOhm	2%	
	R..0089	57.11.3103	10 kOhm	2%	
	R..0090	57.11.3104	100 kOhm	5%	
	R..0091	57.11.3105	1 MOhm	5%	
	S-1/0-9	55.01.0170		SAE-Nr. 1010-692	
	T..0001	1.222.360.00		Output Transformer	St
	T..0002	1.222.419.00		Input Transformer 1:1	St

IND.	POS.NO.	PART NO.	VALUE	SPECIFICATIONS / EQUIVALENT	MANUF.
	C..0001	59.06-0223	22 nF	10%	
	C..0002	59.05-1581	680 pF	1%	
	C..0003	59.05-1581	680 pF	1%	
	C..0004	59.05-1103	10 nF	1%	
	C..0005	59.06-0104	100 nF	20%, PETP	
	C..0006	59.06-0104	100 nF	20%, PETP	
	C..0007	59.22-2102	1000 uF	-10%, 6/, El	
	C..0008	59.22-4470	47 uF	-10%, 40/, El	
	C..0009	59.22-4471	470 uF	-10%, 16/, El	
	C..0010	59.34-2330	33 pF	5%, N150, Ce	
	C..0011	59.26-0470	47 nF	20%, 6.3/, Sal	Ph
	C..0012	59.26-2100	10 nF	20%, 16/, Sal	Ph
	C..0013	59.34-2680	68 pF	5%, N150, Ce	
	C..0014	59.22-4471	470 uF	-10%, 16/, El	
	C..0015	59.22-3101	100 uF	-10%, 10/, El	
	C..0016	59.05-1332	3300 pF	1%	
	C..0017	59.22-4471	47 uF	-10%, 40/, El	
	C..0018	59.99-0421	47 uF	20%, 16/, El bipolar	
	C..0019	59.34-2220	22 pF	5%, N150, Ce	
	C..0020	59.35-1221	220 pF	1%	
	C..0021	59.22-2221	220 uF	-10%, 6/, El	
	C..0022	59.06-5104	0.1 uF	5%	
	C..0023	59.06-0104	100 nF	20%, PETP	
	C..0024	59.26-2100	10 nF	20%, 16/, Sal	Ph
	C..0025	59.18-0108	40 pF	Trimmer Capacitor, Philips Nr 2222 808 32409	
	C..0026	59.26-0470	47 nF	20%, 6.3/, Sal	Ph
	C..0027	59.06-0104	100 nF	20%, PETP	
	C..0028	59.26-0470	47 nF	20%, 6.3/, Sal	Ph
	C..0029	59.26-1220	22 nF	20%, 10/, Sal	Ph
	C..0030	59.12-7202	2 nF	1%	
	C..0031	59.05-1472	4.7 nF	1%	
	C..0032	59.26-0470	47 nF	20%, 6.3/, Sal	Ph
	C..0033	59.26-0470	47 nF	20%, 6.3/, Sal	Ph
	C..0034	59.26-2100	10 nF	20%, 16/, Sal	Ph
	C..0035	59.05-5103	10 nF	20%, PETP	
	D..0001	50.34-0512	1N5818		Mot

IND.	POS.NO.	PART NO.	VALUE	SPECIFICATIONS / EQUIVALENT	MANUF.
	D..0002	50.34-0125	1N4448		Fc,ITT,Phs,SES,Tf
	D..0003	50.34-1114	10V Z	5%	ITT,Ses
	D..0004	50.34-0125	1N4448		Fc,ITT,Phs,SES,Tf
	D..0005	50.34-1114	10V Z	5%	ITT,Ses
	D..0006	50.34-0125	1N4448		Fc,ITT,Phs,SES,Tf
	D..0007	50.34-1114	10V Z	5%	ITT,Ses
	D..0008	50.34-0512	1N5818		Mot
	D..0009	50.34-0125	1N4448		Fc,ITT,Phs,SES,Tf
	D..0010	50.34-0512	1N5818		Mot
	D..0011	50.34-1114	10V Z	5%	ITT,Ses
	D..0012	50.34-0125	1N4448		Fc,ITT,Phs,SES,Tf
	D..0013	50.34-0125	1N4448		Fc,ITT,Phs,SES,Tf
	D..0014	50.34-0125	1N4448		Fc,ITT,Phs,SES,Tf
	D..0015	50.34-1114	10V Z	5%	ITT,Ses
	D..0016	50.34-0125	1N4448		Fc,ITT,Phs,SES,Tf
	D..0017	50.34-0125	1N4448		Fc,ITT,Phs,SES,Tf
	D..0018	50.34-0125	1N4448		Fc,ITT,Phs,SES,Tf
	D..0019	50.34-1114	10V Z	5%	ITT,Ses
	D..0020	50.34-0125	1N4448		Fc,ITT,Phs,SES,Tf
	D..0021	50.34-0125	1N4448		Fc,ITT,Phs,SES,Tf
	IC..0001	50.07-0003	MM74C374N		NS
	IC..0002	50.53-0283	LM393N		TI+NS
	IC..0003	50.39-0106	NE5532AN	KR5532AN, 5532ANB	Sig+Ex+Ra
	IC..0004	50.03-0283	LM393N		TI+NS
	IC..0005	50.11-0106	SO 214 DE	BSD 214	Phs+Six
	IC..0006	50.11-0106	SO 214 DE	BSD 214	Phs+Six
	IC..0007	50.11-0106	SO 214 DE	BSD 214	Phs+Six
	IC..0008	50.11-0105	SO 214 DE	BSD 214	Phs+Six
	IC..0009	50.39-0105	NE5532N	KR5532N, 5532NB	Sig+Ex+Ra
	IC..0010	50.39-0105	NE5532N	KR5532N, 5532NB	Sig+Ex+Ra
	M..0001	1.010.034.50	T 114 sel	See Note 1	Sie
	M..0002	1.010.034.50	T 114 sel	See Note 1	Sie
	M..0003	1.010.034.50	T 114 sel	See Note 1	Sie
	Q..0004	50.03-0451	BD139-10	NPN	Phs,Sie,Tf
	Q..0005	50.03-0452	BD140-10	PNP	Phs,Sie,Tf

IND.	POS.NO.	PART NO.	VALUE	SPECIFICATIONS / EQUIVALENT	MANUF.
	M..0006	1.010.034.50	T 114 sel	See Note 1	Sie
	M..0007	1.010.034.50	T 114 sel	See Note 1	Sie
	M..0008	1.010.034.50	T 114 sel	See Note 1	Sie
	R..0001	57.11.3272	2.7 kOhm	1%	
	R..0002	57.11.3272	2.7 kOhm	1%	
	R..0003	57.11.3272	2.7 kOhm	1%	
	R..0004	57.11.3272	2.7 kOhm	1%	
	R..0005	57.11.3103	10 kOhm	5%	
	R..0006	57.11.3103	10 kOhm	5%	
	R..0007	57.11.3202	2 kOhm	1%	
	R..0008	57.11.3122	1.2 kOhm	5%	
	R..0009	57.11.3681	680 Ohm	1%	
	R..0010	57.11.3101	100 Ohm	5%	
	R..0011	57.11.3122	1.2 kOhm	5%	
	R..0012	57.11.3122	1.2 kOhm	5%	
	R..0013	57.11.3273	27 kOhm	5%	
	R..0014	57.11.3183	18 kOhm	5%	
	R..0015	57.11.3273	27 kOhm	5%	
	R..0016	57.11.3102	1 kOhm	2%	
	R..0017	57.11.3105	1 MOhm	5%	
	R..0018	57.11.3272	2.7 kOhm	2%	
	R..0019	57.11.3181	180 Ohm	2%	
	R..0020	57.11.3622	6.2 kOhm	5%	
	R..0021	57.11.3104	100 kOhm	5%	
	R..0022	57.11.3471	470 Ohm	2%	
	R..0023	57.11.3104	100 kOhm	5%	
	R..0024	57.11.3823	82 kOhm	5%	
	R..0025	57.11.3223	22 kOhm	5%	
	R..0026	57.11.3392	3.9 kOhm	2%	
	R..0027	57.11.3470	47 Ohm	5%	
	R..0028	57.11.3472	4.7 kOhm	5%	
	R..0029	57.11.3105	1 MOhm	5%	
	R..0030	57.11.3104	100 kOhm	5%	
	R..0031	57.11.3102	1 kOhm	5%	
	R..0032	57.11.3223	22 kOhm	5%	
	R..0033	57.11.3104	100 kOhm	5%	

IND.	POS.NO.	PART NO.	VALUE	SPECIFICATIONS / EQUIVALENT	MANUF.

Note 1 - T 114 sel. for invers mode (±8C = 3 mA)
VCE < 0.7 mV, IE 0 mA. VCE < 25 mV, IE 4 mA

Note 2 - 150 mA PTC-Resistor
Philips Nr. 2322 661 11511
PTC-Resistor may be replaced by Fuse-Resistor
57.19.0180, Philips Nr. 2322 205 13189.

Note 3 - 2 kOhm Potentiometer lin., 10t
Bourns Nr. 3386 P-1-202
Allen Bradley Nr. E 2 B 202
Spectrol Nr. 63 M 202 1010

Note 4 - 2 kOhm Potentiometer lin., 10t
Bourns Nr. 3296 Z - 1 - 202
Spectrol Nr. 64 Z 202 T 000
Murata Nr. PDT 3105 Z - 1 - 202
Contelec Nr. 103 XZ 202

Ce=Ceramic, El=Electrolytic, Sal=Solid aluminium

MANUFACTURER: Ex=Exar, ITT=Intermetall, Mot=Motorola,
NS=National Semiconductor, Ph=Philips, Ra=Raytheon,
Ses=Sescosem, Sie=Siemens, Sig=Signetics, Six=Siliconix,
St=Studer, Tf=Telefunken, TI=Texas Instruments.

ORIG 88/01/21

LINE AMPLIFIER WITH TRAFO 1.820.814.00

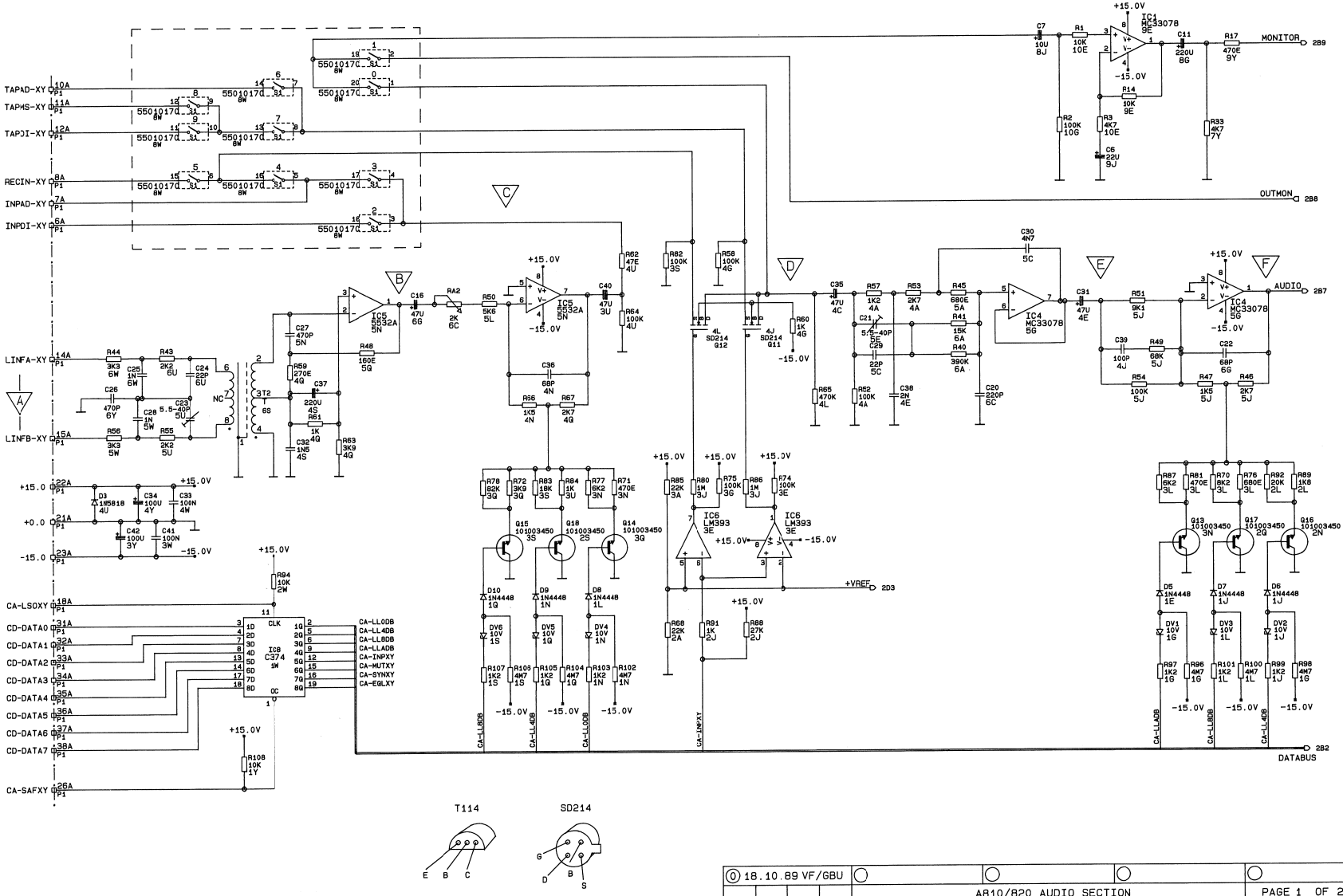

⓪ 18.10.89 VF/GBU			
	A810/820 AUDIO SECTION		PAGE 1 OF 2
STUDER	LINE AMPLIFIER WITH TRAFO	SC	1.820.814-00

LINE AMPLIFIER WITH TRAFO 1.820.814.00

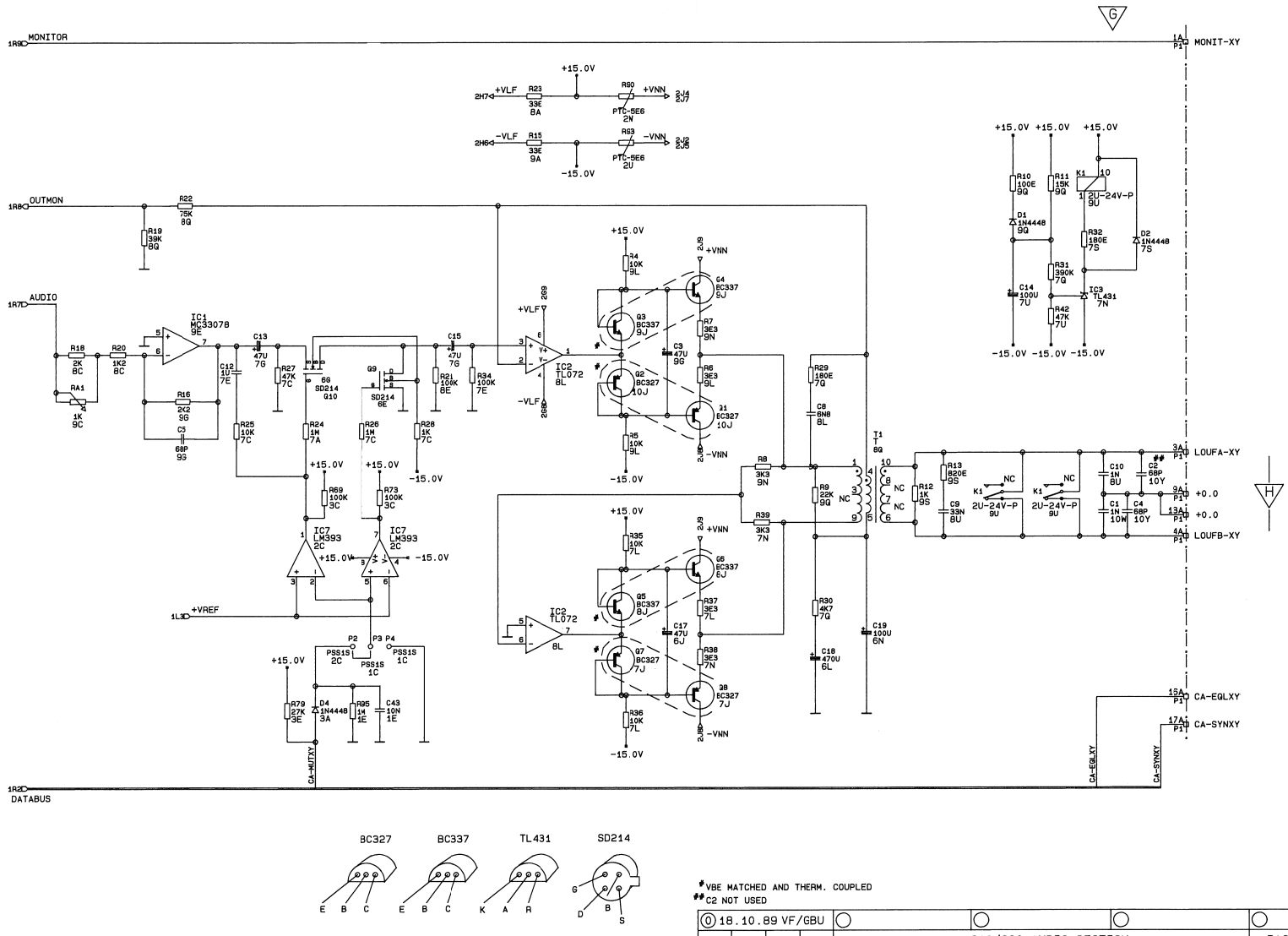

LINE AMPLIFIER WITH TRAFO 1.820.814.00

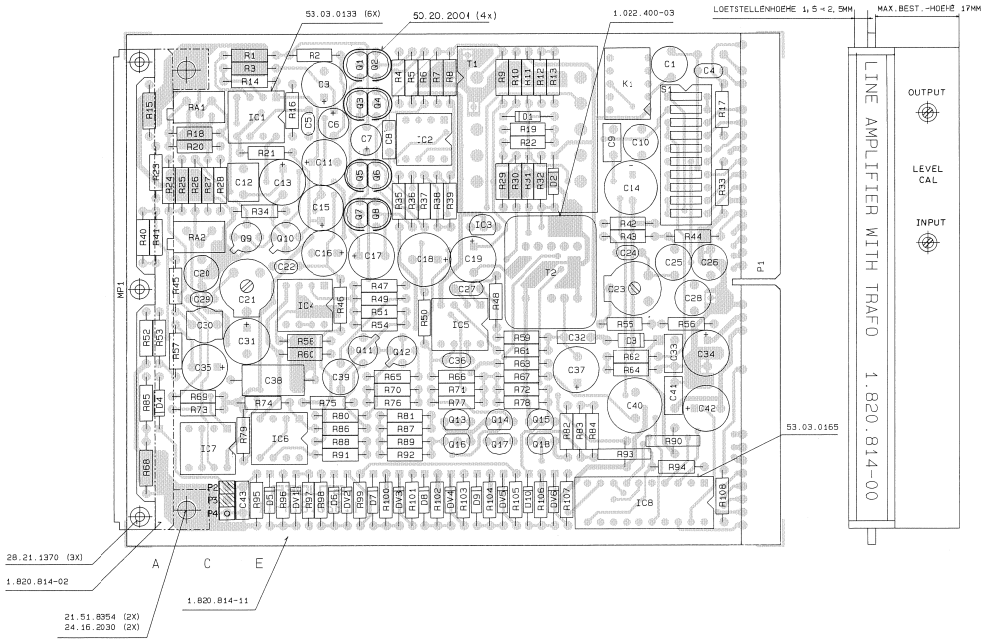

IND.	POS.NO.	PART NO.	VALUE	SPECIFICATIONS / EQUIVALENT	MANUF.
	P....2	54.01.0020	Connector	contact pin .63x.63, H=5.8/3.4	
	P....3	54.01.0020	Connector	contact pin .63x.63, H=5.8/3.4	
	P....4	54.01.0020	Connector	contact pin .63x.63, H=5.8/3.4	
	Q....1	50.03.0625	BC 327	E 6310, see note 2	Sie
	Q....2	50.03.0625	BC 327	E 6310, see note 2	Sie
	Q....3	50.03.0516	BC 337	E 6310, see note 2	Sie
	Q....4	50.03.0516	BC 337	E 6310, see note 2	Sie
	Q....5	50.03.0516	BC 337	E 6310, see note 2	Sie
	Q....6	50.03.0516	BC 337	E 6310, see note 2	Sie
	Q....7	50.03.0625	BC 327	E 6310, see note 2	Sie
	Q....8	50.03.0625	BC 327	E 6310, see note 2	Sie
	Q....9	50.11.0106	SD 214-DE		Ph/Six
	Q....10	50.11.0106	SD 214-DE		Ph/Six
	Q....11	50.11.0106	SD 214-DE		Ph/Six
	Q....12	50.11.0106	SD 214-DE		Ph/Six
	Q....13	1.010.034.50	Q. NPN	see note 1	
	Q....14	1.010.034.50	Q. NPN	see note 1	
	Q....15	1.010.034.50	Q. NPN	see note 1	
	Q....16	1.010.034.50	Q. NPN	see note 1	
	Q....17	1.010.034.50	Q. NPN	see note 1	
	Q....18	1.010.034.50	Q. NPN	see note 1	
	R....1	57.11.3103	10 kOhm	2%, 0207 , MF	
	R....2	57.11.3104	100 kOhm	1%, 0207 , MF	
	R....3	57.11.3472	4.7 kOhm	1%, 0207 , MF	
	R....4	57.11.3103	10 kOhm	2%, 0207 , MF	
	R....5	57.11.3103	10 kOhm	2%, 0207 , MF	
	R....6	57.11.3339	3.3 Ohm	1%, 0207 , MF	
	R....7	57.11.3339	3.3 Ohm	1%, 0207 , MF	
	R....8	57.11.3332	3.3 kOhm	1%, 0207 , MF	
	R....9	57.11.3223	22 kOhm	1%, 0207 , MF	
	R....10	57.11.3101	100 Ohm	10%, 0207 , MF	
	R....11	57.11.3153	15 kOhm	10%, 0207 , MF	
	R....12	57.11.3102	1 kOhm	2%, 0207 , MF	
	R....13	57.11.3821	820 Ohm	2%, 0207 , MF	
	R....14	57.11.3103	10 kOhm	1%, 0207 , MF	

IND.	POS.NO.	PART NO.	VALUE	SPECIFICATIONS / EQUIVALENT	MANUF.
	R....15	57.11.3330	33 Ohm	2%, 0207 , MF	
	R....15	57.11.3222	2.2 kOhm	2%, 0207 , MF	
	R....17	57.11.3471	470 Ohm	2%, 0207 , MF	
	R....19	57.11.3202	2 kOhm	2%, 0207 , MF	
	R....19	57.11.3393	39 kOhm	1%, 0207 , MF	
	R....20	57.11.3122	1.2 kOhm	2%, 0207 , MF	
	R....21	57.11.3104	100 kOhm	2%, 0207 , MF	
	R....22	57.11.3753	75 kOhm	1%, 0207 , MF	
	R....23	57.11.3330	33 Ohm	2%, 0207 , MF	
	R....24	57.11.3105	1 MOhm	10%, 0207 , MF	
	R....25	57.11.3103	10 kOhm	2%, 0207 , MF	
	R....25	57.11.3105	1 MOhm	10%, 0207 , MF	
	R....27	57.11.3473	47 kOhm	2%, 0207 , MF	
	R....28	57.11.3102	1 kOhm	10%, 0207 , MF	
	R....29	57.11.3181	180 Ohm	2%, 0207 , MF	
	R....30	57.11.3472	4.7 kOhm	2%, 0207 , MF	
	R....31	57.11.3394	390 kOhm	10%, 0207 , MF	
	R....32	57.11.3181	180 Ohm	10%, 0207 , MF	
	R....33	57.11.3472	4.7 kOhm	2%, 0207 , MF	
	R....34	57.11.3104	100 kOhm	2%, 0207 , MF	
	R....35	57.11.3103	10 kOhm	2%, 0207 , MF	
	R....36	57.11.3103	10 kOhm	2%, 0207 , MF	
	R....37	57.11.3339	3.3 Ohm	1%, 0207 , MF	
	R....38	57.11.3339	3.3 Ohm	1%, 0207 , MF	
	R....39	57.11.3332	3.3 kOhm	1%, 0207 , MF	
	R....40	57.11.3394	390 kOhm	1%, 0207 , MF	
	R....41	57.11.3153	15 kOhm	1%, 0207 , MF	
	R....42	57.11.3473	47 kOhm	10%, 0207 , MF	
	R....43	57.11.3222	2.2 kOhm	1%, 0207 , MF	
	R....44	57.11.3332	3.3 kOhm	1%, 0207 , MF	
	R....45	57.11.3681	680 Ohm	1%, 0207 , MF	
	R....46	57.11.3272	2.7 kOhm	1%, 0207 , MF	
	R....47	57.11.3152	1.5 kOhm	1%, 0207 , MF	
	R....48	57.11.3161	150 Ohm	2%, 0207 , MF	
	R....49	57.11.3683	68 kOhm	1%, 0207 , MF	
	R....50	57.11.3562	5.6 kOhm	2%, 0207 , MF	
	R....51	57.11.3912	9.1 kOhm	1%, 0207 , MF	

IND.	POS.NO.	PART NO.	VALUE	SPECIFICATIONS / EQUIVALENT	MANUF.
	C....1	59.05.1102	1 nF	1%, 630V , PP	
	C....2	59.34.2680	68 pF	5%, CER	
	C....3	59.22.4470	47 uF	-20%, 16V , EL	
	C....4	59.34.2680	68 pF	5%, CER	
	C....5	59.34.4680	68 pF	5%, CER	
	C....6	59.22.5220	22 uF	-20%, 25V , EL	
	C....7	59.22.6100	10 uF	-20%, 35V , EL	
	C....8	59.06.0682	6.8 nF	10%, 63V , FETP	
	C....9	59.06.0333	33 nF	10%, 63V , FETP	
	C....10	59.05.1102	1 nF	1%, 630V , PP	
	C....11	59.22.3221	220 uF	-20%, 10V , EL	
	C....12	59.06.0105	1 uF	10%, 50V , FETP	
	C....13	59.22.4470	47 uF	-20%, 16V , EL	
	C....14	59.22.6101	100 uF	-20%, 40V , EL	
	C....15	59.22.4470	47 uF	-20%, 16V , EL	
	C....16	59.22.4470	47 uF	-20%, 16V , EL	
	C....17	59.22.4470	47 uF	-20%, 16V , EL	
	C....18	59.22.2471	470 uF	-20%, 6.3V , EL	
	C....19	59.22.4101	100 uF	-20%, 16V , EL	
	C....20	59.05.1221	220 pF	1%, 630V , PP	
	C....21	59.18.0108	5.5-40 pF	100V , TRI	
	C....22	59.34.4680	68 pF	5%, CER	
	C....23	59.18.0108	5.5-40 pF	100V , TRI	
	C....24	59.34.2220	22 pF	5%, CER	
	C....25	59.05.1102	1 nF	1%, 630V , PP	
	C....26	59.05.2471	470 pF	2.5%, 630V , PP	
	C....27	59.34.5471	470 pF	5%, CER	
	C....28	59.05.1102	1 nF	1%, 630V , PP	
	C....29	59.34.2220	22 pF	5%, CER	
	C....30	59.05.1472	4.7 nF	1%, 63V , PP	
	C....31	59.22.4470	47 uF	-20%, 16V , EL	
	C....32	59.06.0152	1.5 nF	10%, 63V , FETP	
	C....33	59.06.0104	100 nF	10%, 63V , FETP	
	C....34	59.22.5101	100 uF	-20%, 25V , EL	
	C....35	59.22.4470	47 uF	-20%, 16V , EL	
	C....36	59.34.2680	68 pF	5%, CER	
	C....37	59.22.3221	220 uF	-20%, 10V , EL	

IND.	POS.NO.	PART NO.	VALUE	SPECIFICATIONS / EQUIVALENT	MANUF.
	C....38	59.12.7202	2 nF	1%, 63V , PS	
	C....39	59.05.1101	100 pF	1%, 630V , PP	
	C....40	59.99.0401	47 uF	-10%, 16V , ELBIP	
	C....41	59.06.0104	100 nF	10%, 63V , FETP	
	C....42	59.22.5101	100 uF	-20%, 25V , EL	
	C....43	59.06.5103	10 nF	5%, 63V , FETP	
	D....1	50.04.0125	1N 4448		Fe/ITT/Ph/Tf
	D....2	50.04.0125	1N 4448		Fe/ITT/Ph/Tf
	D....3	50.04.0512	1N 5818	1N 5819	Mot
	D....4	50.04.0125	1N 4448		Fe/ITT/Ph/Tf
	D....5	50.04.0125	1N 4448		Fe/ITT/Ph/Tf
	D....6	50.04.0125	1N 4448		Fe/ITT/Ph/Tf
	D....7	50.04.0125	1N 4448		Fe/ITT/Ph/Tf
	D....8	50.04.0125	1N 4448		Fe/ITT/Ph/Tf
	D....9	50.04.0125	1N 4448		Fe/ITT/Ph/Tf
	D....10	50.04.0125	1N 4448		Fe/ITT/Ph/Tf
	DV....1	50.04.1114	10 V	5%, 0.40W, Z	ITT/Ket/Ph/Tf/SGS
	DV....2	50.04.1114	10 V	5%, 0.40W, Z	ITT/Ket/Ph/Tf/SGS
	DV....3	50.04.1114	10 V	5%, 0.40W, Z	ITT/Ket/Ph/Tf/SGS
	DV....4	50.04.1114	10 V	5%, 0.40W, Z	ITT/Ket/Ph/Tf/SGS
	DV....5	50.04.1114	10 V	5%, 0.40W, Z	ITT/Ket/Ph/Tf/SGS
	DV....6	50.04.1114	10 V	5%, 0.40W, Z	ITT/Ket/Ph/Tf/SGS
	IC....1	50.09.0117	MC 3307BP		Mot
	IC....2	50.09.0101	TL 072 CP		Mot/Ti/NS/SGS
	IC....3	50.10.0106	TL 491CLP		Mot/Ti
	IC....4	50.09.0117	MC 3307BP		Mot
	IC....5	50.09.0106	NE 5532AN	XR 5532 AN	Ex/Sig/Ra
	IC....6	50.05.0283	LM 393 ..	TDB 0193 BP	Fa/Sig
	IC....7	50.05.0283	LM 393 ..	TDB 0193 BP	Fa/Sig
	IC....8	50.07.0003	MM74C374N		NS
	J....1	54.01.0021	Jumper		
	K....1	56.04.0197	24 V 2aU	125V/ 2 A , AG/AU	SDS

IND.	POS.NO.	PART NO.	VALUE	SPECIFICATIONS / EQUIVALENT	MANUF.
	R....52	57.11.3104	100 kOhm	1%, 0207 , MF	
	R....53	57.11.3272	2.7 kOhm	1%, 0207 , MF	
	R....54	57.11.3104	100 kOhm	2%, 0207 , MF	
	R....55	57.11.3222	2.2 kOhm	1%, 0207 , MF	
	R....56	57.11.3332	3.3 kOhm	1%, 0207 , MF	
	R....57	57.11.3122	1.2 kOhm	1%, 0207 , MF	
	R....58	57.11.3104	100 kOhm	10%, 0207 , MF	
	R....59	57.11.3271	270 Ohm	2%, 0207 , MF	
	R....60	57.11.3102	1 kOhm	10%, 0207 , MF	
	R....61	57.11.3102	1 kOhm	2%, 0207 , MF	
	R....62	57.11.3470	47 Ohm	10%, 0207 , MF	
	R....63	57.11.3392	3.9 kOhm	2%, 0207 , MF	
	R....64	57.11.3104	100 kOhm	10%, 0207 , MF	
	R....65	57.11.3474	470 kOhm	10%, 0207 , MF	
	R....66	57.11.3152	1.5 kOhm	1%, 0207 , MF	
	R....67	57.11.3272	2.7 kOhm	1%, 0207 , MF	
	R....68	57.11.3223	22 kOhm	10%, 0207 , MF	
	R....69	57.11.3104	100 kOhm	10%, 0207 , MF	
	R....70	57.11.3822	8.2 kOhm	2%, 0207 , MF	
	R....71	57.11.3471	470 Ohm	1%, 0207 , MF	
	R....72	57.11.3392	3.9 kOhm	1%, 0207 , MF	
	R....73	57.11.3104	100 kOhm	10%, 0207 , MF	
	R....74	57.11.3104	100 kOhm	10%, 0207 , MF	
	R....75	57.11.3104	100 kOhm	10%, 0207 , MF	
	R....76	57.11.3681	680 Ohm	1%, 0207 , MF	
	R....77	57.11.3622	6.2 kOhm	2%, 0207 , MF	
	R....78	57.11.3823	82 kOhm	2%, 0207 , MF	
	R....79	57.11.3273	27 kOhm	10%, 0207 , MF	
	R....80	57.11.3105	1 MOhm	10%, 0207 , MF	
	R....81	57.11.3471	470 Ohm	1%, 0207 , MF	
	R....82	57.11.3104	100 kOhm	10%, 0207 , MF	
	R....83	57.11.3183	18 kOhm	2%, 0207 , MF	
	R....84	57.11.3102	1 kOhm	1%, 0207 , MF	
	R....85	57.11.3223	22 kOhm	10%, 0207 , MF	
	R....86	57.11.3105	1 MOhm	10%, 0207 , MF	
	R....87	57.11.3622	6.2 kOhm	2%, 0207 , MF	
	R....88	57.11.3273	27 kOhm	10%, 0207 , MF	

IND.	POS.NO.	PART NO.	VALUE	SPECIFICATIONS / EQUIVALENT	MANUF.
	R....89	57.11.3182	1.8 kOhm	1%, 0207 , MF	
	R....90	57.99.0209	5.6 Ohm	PTC	
	R....91	57.11.3102	1 kOhm	10%, 0207 , MF	
	R....92	57.11.3203	20 kOhm	2%, 0207 , MF	
	R....93	57.99.0209	5.6 Ohm	PTC	
	R....94	57.11.3103	10 kOhm	10%, 0207 , MF	
	R....95	57.11.3105	1 MOhm	10%, 0207 , MF	
	R....96	57.11.5475	4.7 MOhm	10%, 0207 , MF	
	R....97	57.11.3122	1.2 kOhm	10%, 0207 , MF	
	R....98	57.11.5475	4.7 MOhm	10%, 0207 , MF	
	R....99	57.11.3122	1.2 kOhm	10%, 0207 , MF	
	R...100	57.11.5475	4.7 MOhm	10%, 0207 , MF	
	R...101	57.11.3122	1.2 kOhm	10%, 0207 , MF	
	R...102	57.11.5475	4.7 MOhm	10%, 0207 , MF	
	R...103	57.11.3122	1.2 kOhm	10%, 0207 , MF	
	R...104	57.11.5475	4.7 MOhm	10%, 0207 , MF	
	R...105	57.11.3122	1.2 kOhm	10%, 0207 , MF	
	R...106	57.11.5475	4.7 MOhm	10%, 0207 , MF	
	R...107	57.11.3122	1.2 kOhm	10%, 0207 , MF	
	R...108	57.11.3103	10 kOhm	10%, 0207 , MF	
	RA....1	58.05.0102	1 kOhm	10%, .5 W , PMS	
	RA....2	58.05.0202	2 kOhm	10%, .5 W , PMS	
	S....1	55.01.0170	DIL-switch	10xA, print	
	T....1	1.022.362.00		LINE OUTPUT TRAFO 1:1:46	
	T....2	1.022.454.00		INPUT TRAFO 1:0:175	

Note 1 - BC 337 E selected for inverse mode (IBC = 3 mA)
UCE < 0.7 mV, IE 0 mA. UCE < 25 mV, IE 4 mA.

Note 2 - Q1-Q2, Q3-Q4, Q5-Q6, Q7-Q8 matched and thermically coupled with 50.20.2001.

Cer=Ceramic, ElBip=Electrolytic Bipolar,
El=Electrolytic, Sal=Solid aluminum.

MANUFACTURER: Ex=Exar;Fae=Faselec; Fe=Fairchild, GI=General Instruments;
ITT=Intercastall; Mot=Motorola; NS=National Semicond.;
Ph=Philips; Ra=Raytheon; RCA=Radio Corp. of America;
Sea=Seeconee; Sie=Sienens; Sig=Signetics; SGS=SGS/Ates;
St=Studer; Six=Siliconix; TS=Teledyne Semiconductors;
Té=Telefunken; TI=Texas Instruments.

ORIG 89/10/18

LINE AMPLIFIER TRAFOLESS 1.820.715.81

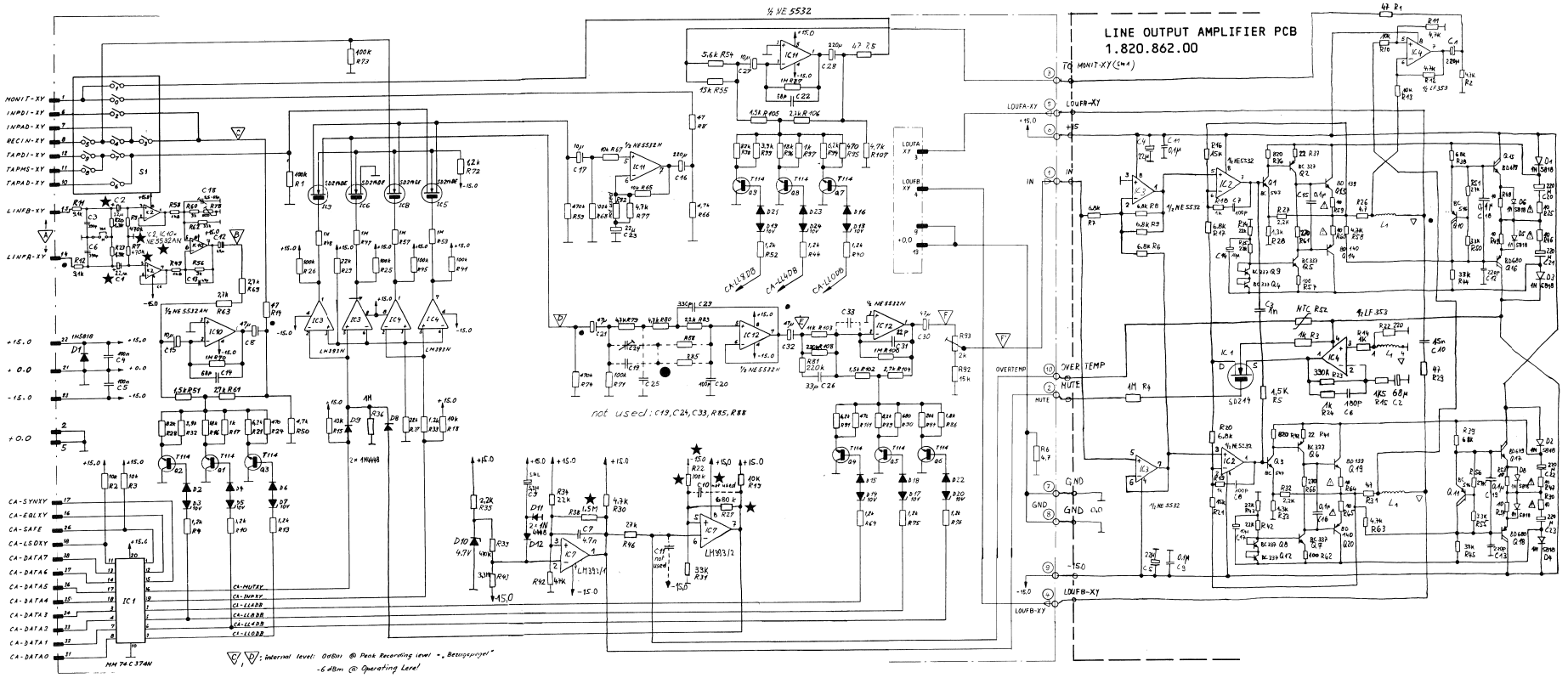

★ HAS BEEN MODIFIED:

	1.820.715.00	1.820.715.81
C10	10 nF (59.06.0102)	NOT USED
R22	33 kΩ (57.11.4333)	100 kΩ (57.11.4104)
R27	1 MΩ or 3.3 MΩ (57.11.4105 or 57.11.5335	680 kΩ (57.11.4684)
R38	3.3 MΩ (57.11.5335)	1.5 MΩ (57.11.5155)

16 SEP. 1985 Gä	A810/A812/A820		
STUDER	LINE AMP. TRAFOLESS	1.820.715.81	PAGE OF

10.9.1985 Gä	A810/A812/A820		
STUDER	LINE AMP. TRAFOLESS 1.820.715.00/.81	1.820.862.00	PAGE OF

LINE AMPLIFIER TRAFOLESS 1.820.715.81

COMPONENT SIDE

LINE AMPL. TRAFOLESS 4.820.715-00

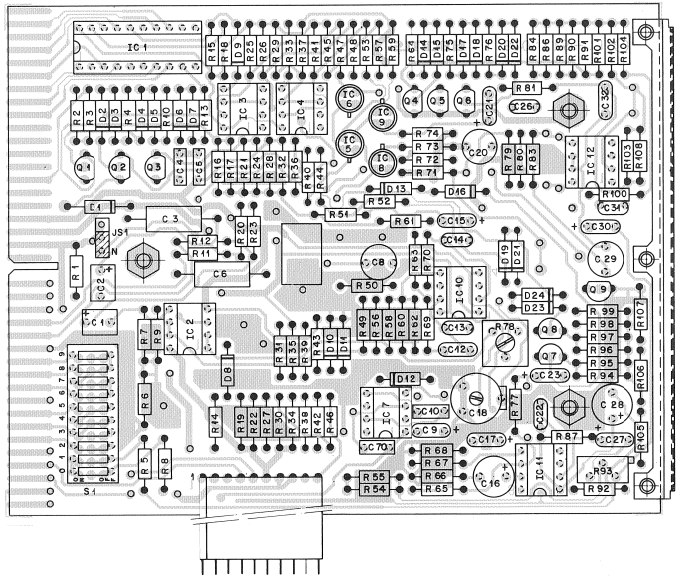

IND.	POS.NO.	PART NO.	VALUE	SPECIFICATIONS / EQUIVALENT	MANUF.
	A.....1	1.820.862.00		Line Output Amplifier	St
	C.....1	59.22.6220	22 uF	35V, EL	
	C.....2	59.22.6220	22 uF	35V, EL	
	C.....3	59.12.7791	390 pF	1%, PS	
	C.....4	59.06.0104	100 nF	20%, PETP	
	C.....5	59.06.0104	100 nF	20%, PETP	
	C.....6	59.12.7791	390 pF	1%, PS	
	C.....7	59.06.0472	4.7 nF	20%, PETP	
	C.....8	59.22.3470	47 uF	20%, 10V, El	
	C.....9	59.26.2399	3.3 uF	16 V, SAL	
	C.....10		not used		
	C.....11		not used		
	C.....12	59.26.0470	47 uF	SAL	Ph
	C.....13	59.34.2470	47 pF	Ce	
	C.....14	59.34.2680	68 pF	5%, N150, Ce	
	C.....15	59.26.2100	10 uF	20%, 16V, Sal	Ph
	C.....16	59.22.2221	220 uF	-10%, 6V, El	
	C.....17	59.26.2100	10 uF	20%, 16V, Sal	Ph
	C.....18	59.10.0102	5/5-65pF		
	C.....19		not used		
	C.....20	59.05.1101	100 pF	1%,	
	C.....21	59.26.0470	47 uF	20%, 6.3V, Sal	Ph
	C.....22	59.34.2680	68 pF	5%, N150, Ce	
	C.....23	59.26.1220	22 uF	20%, 10V, Sal	Ph
	C.....24		not used		
	C.....25		not used		
	C.....26	59.34.2330	33 pF	Ce	
	C.....27	59.26.2100	10 uF	20%, 16V, Sal	Ph
	C.....28	59.22.2221	220 uF	-10%, 6V, El	
	C.....29	59.05.1131	330 pF	1%, PP	
	C.....30	59.26.0470	47 uF	20%, 6.3V, Sal	Ph
	C.....31	59.34.2220	22 pF	Ce	
	C.....32	59.26.0470	47 uF	20%, 6.3V, Sal	Ph
	C.....33		not used		
	D.....1	50.04.0512	1N5818		Mot

IND.	POS.NO.	PART NO.	VALUE	SPECIFICATIONS / EQUIVALENT	MANUF.
	D.....2	50.04.0125	1N4448		ITT,Ph,See
	D.....3	50.04.1114	10V Z	5% ITT,See	
	D.....4	50.04.0125	1N4448		ITT,Ph,See
	D.....5	50.04.1114	10V Z	5% ITT,See	
	D.....6	50.04.0125	1N4448		ITT,Ph,See
	D.....7	50.04.1114	10V Z	5% ITT,See	
	D.....8	50.04.0125	1N4448		ITT,Ph,See
	D.....9	50.04.0125	1N4448		ITT,Ph,See
	D.....10	50.04.1123	4.7V Z	Mot	
	D.....11	50.04.0125	1N4448		ITT,Ph,See
	D.....12	50.04.0125	1N4448		ITT,Ph,See
	D.....13	50.04.1114	10V Z	5% ITT,See	
	D.....14	50.04.1114	10V Z	5% ITT,See	
	D.....15	50.04.0125	1N4448		ITT,Ph,See
	D.....16	50.04.0125	1N4448		ITT,Ph,See
	D.....17	50.04.1114	10V Z	5% ITT,See	
	D.....18	50.04.0125	1N4448		ITT,Ph,See
	D.....19	50.04.1114	10V Z	5% ITT,See	
	D.....20	50.04.1114	10V Z	5% ITT,See	
	D.....21	50.04.0125	1N4448		ITT,Ph,See
	D.....22	50.04.0125	1N4448		ITT,Ph,See
	D.....23	50.04.0125	1N4448		ITT,Ph,See
	D.....24	50.04.1114	10V Z	5% ITT,See	
	IC.....1	50.07.0803	MM74C374N		NS
	IC.....2	50.09.0.06	NE5532AN	XR5532ANB, 5532ANB	Sig,Ex,Ra
	IC.....3	50.05.0283	LM393N		TI,NS
	IC.....4	50.05.0283	LM393N		TI,NS
	IC.....5	50.11.0.06	SD 214 DE	BSD 214	Ph,Six
	IC.....6	50.11.0.06	SD 214 DE	BSD 214	Ph,Six
	IC.....7	50.05.0283	LM393N		TI,NS
	IC.....8	50.11.0.06	SD 214 DE	BSD 214	Ph,Six
	IC.....9	50.11.0.06	SD 214 DE	BSD 214	Ph,Six
	IC.....10	50.09.0.06	NE5532AN	XR5532AN, 5532ANB	Sig,Ex,Ra
	IC.....11	50.09.0.05	NE5532N	XR5532N, 5532NB	Sig,Ex,Ra
	IC.....12	50.09.0.06	NE5532AN	XR5532AN, 5532ANB	Sig,Ex,Ra

IND.	POS.NO.	PART NO.	VALUE	SPECIFICATIONS / EQUIVALENT	MANUF.
	JS.....1	54.01.0020	3 cont.	Philips Nr. 2422 025 89303 See note 1	
	Q.....1	1.010.034.50		See Note 2	
	Q.....2	1.010.034.50		See Note 2	
	Q.....3	1.010.034.50		See Note 2	
	Q.....4	1.010.034.50		See Note 2	
	Q.....5	1.010.034.50		See Note 2	
	Q.....6	1.010.034.50		See Note 2	
	Q.....7	1.010.034.50		See Note 2	
	Q.....8	1.010.034.50		See Note 2	
	Q.....9	1.010.034.50		See Note 2	
	R.....1	57.11.4.04	100 kOhm	5%	
	R.....2	57.11.4.03	10 kOhm	5%	
	R.....3	57.11.4.03	10 kOhm	5%	
	R.....4	57.11.4.22	1.2 kOhm	5%	
	R.....5	57.11.4470	47 Ohm	5%	
	R.....6	57.11.4479	4.7 Ohm	5%	
	R.....7	57.11.4474	470 kOhm	5%	
	R.....8	57.11.4470	47 Ohm	5%	
	R.....9	57.11.4474	470 kOhm	5%	
	R....10	57.11.4122	1.2 kOhm	5%	
	R....11	57.11.3912	9.1 kOhm	1%	
	R....12	57.11.3912	9.1 kOhm	1%	
	R....13	57.11.4122	1.2 kOhm	5%	
	R....14	57.11.4470	47 Ohm	5%	
	R....15	57.11.4103	10 kOhm	5%	
	R....16	57.11.4183	18 kOhm	5%	
	R....17	57.11.3102	1 kOhm	1%	
	R....18	57.11.4103	10 kOhm	5%	
	R....19	57.11.4103	10 kOhm	5%	
	R....20	57.11.3132	1.3 kOhm	1%	
	R....21	57.11.3622	6.2 kOhm	1%	
	R....22	57.11.4104	100 kOhm	5%	
	R....23	57.11.3132	1.3 kOhm	1%	
	R....24	57.11.3471	470 Ohm	1%	
	R....25	57.11.4104	100 kOhm	5%	

IND.	POS.NO.	PART NO.	VALUE	SPECIFICATIONS / EQUIVALENT	MANUF.
	R....26	57.11.4104	100 kOhm	5%	
	R....27	57.11.4684	680 kOhm	5%	
	R....28	57.11.4823	82 kOhm	5%	
	R....29	57.11.4223	22 kOhm	5%	
	R....30	57.11.4172	4.7 kOhm	5%	
	R....31	57.11.4333	33 kOhm	5%	
	R....32	57.11.3392	3.9 kOhm	1%	
	R....33	57.11.4122	1.2 kOhm	5%	
	R....34	57.11.4223	22 kOhm	5%	
	R....35	57.11.4222	2.2 kOhm	5%	
	R....36	57.11.4105	1 MOhm	5%	
	R....37	57.11.4223	22 kOhm	5%	
	R....38	57.11.5155	1.5 MOhm	5%	
	R....39	57.11.4474	470 kOhm	5%	
	R....40	57.11.4122	1.2 kOhm	5%	
	R....41	57.11.4104	100 kOhm	5%	
	R....42	57.11.4472	4.7 kOhm	5%	
	R....43	57.11.5335	3.3 kOhm	5%	
	R....44	57.11.4122	1.2 kOhm	5%	
	R....45	57.11.4104	100 kOhm	5%	
	R....46	57.11.4273	27 kOhm	5%	
	R....47	57.11.4105	1 MOhm	5%	
	R....48	57.11.4105	1 MOhm	5%	
	R....49	57.11.3182	1.8 kOhm	1%	
	R....50	57.11.4472	4.7 kOhm	5%	
	R....51	57.11.3152	1.5 kOhm	1%	
	R....52	57.11.4122	1.2 kOhm	5%	
	R....53	57.11.4105	1 MOhm	5%	
	R....54	57.11.3562	5.6 kOhm	5%	
	R....55	57.11.4153	15 kOhm	2%	
	R....56	57.11.3302	3 kOhm	1%	
	R....57	57.11.4105	1 MOhm	5%	
	R....58	57.11.3182	1.8 kOhm	1%	
	R....59	57.11.4474	470 kOhm	5%	
	R....60	57.11.3302	3 kOhm	1%	
	R....61	57.11.3272	2.7 kOhm	1%	
	R....62	57.11.4333	33 kOhm	2%	
	R....63	57.11.3272	2.7 kOhm	2%	
	R....64	57.11.4122	1.2 kOhm	5%	
	R....65	57.11.4103	10 kOhm	2%	
	R....66	57.11.4472	4.7 kOhm	5%	
	R....67	57.11.4103	10 kOhm	5%	
	R....68	57.11.4104	100 kOhm	5%	
	R....69	57.11.3272	2.7 kOhm	1%	
	R....70	57.11.4105	1 MOhm	5%	
	R....71	57.11.4104	100 kOhm	5%	
	R....72	57.11.4122	1.2 kOhm	5%	
	R....73	57.11.4104	100 kOhm	5%	
	R....74	57.11.4474	470 kOhm	5%	
	R....75	57.11.4122	1.2 kOhm	5%	
	R....76	57.11.4122	1.2 kOhm	5%	
	R....77	57.11.4472	4.7 kOhm	2%	
	R....78	58.01.8501	500 Ohm	See note 3	
	R....79	57.11.4472	4.7 kOhm	2%	
	R....80	57.11.4472	4.7 kOhm	2%	
	R....81	57.11.4224	220 kOhm	2%	
	R....82		not used		
	R....83	57.11.4222	2.2 kOhm	2%	
	R....84	57.11.3203	20 kOhm	5%	
	R....85		not used		
	R....86	57.11.3182	1.8 kOhm	1%	
	R....87	57.11.4105	1 MOhm	5%	
	R....88		not used		
	R....89	57.11.4822	8.2 kOhm	5%	
	R....90	57.11.3681	680 Ohm	1%	
	R....91	57.11.3622	6.2 kOhm	5%	
	R....92	57.11.4153	15 kOhm	5%	
	R....93	58.05.0202	2 kOhm	See note 4	
	R....94	57.11.3622	6.2 kOhm	5%	
	R....95	57.11.3471	470 Ohm	1%	
	R....96	57.11.4183	18 kOhm	5%	
	R....97	57.11.3102	1 kOhm	1%	
	R....98	57.11.4823	82 kOhm	5%	
	R....99	57.11.3392	3.9 kOhm	1%	
	R....100	57.11.4105	1 MOhm	5%	
	R....101	57.11.3471	470 Ohm	1%	
	R....102	57.11.3152	1.5 kOhm	1%	
	R....103	57.11.3113	11 kOhm	1%	
	R....104	57.11.3272	2.7 kOhm	1%	
	R....105	57.11.3152	1.5 kOhm	1%	
	R....106	57.11.3272	2.7 kOhm	1%	
	R....107	57.11.4472	4.7 kOhm	5%	
	R....108	57.11.4224	220 kOhm	5%	
	S.....1	55.01.0170		SAE-Nr. 1010-692	

Note 1 - Bridge Studer Nr. 54.01.0021
Philips Nr. 2422 024 88003

Note 2 - BC 237 B sel. for invers mode (IBC = 3 mA)
VCE < 0.7 mV, IE 0 mA. VCE < 25 mV, IE 4 mA

Note 3 - 500 Ohm Potentiometer lin., 10%
Allen Bradly Nr. E 2B 501
Bourns Nr. 3386 P-1- 501
Spectrol Nr. 63 M 501 T010

Note 4 - 2 kOhm Potentiometer lin., 10%
Bourns Nr. 3296 Z - 1 - 202
Spectrol Nr. 64 Z 202 T 000
Murata Nr. POT 3105 Z - 1 - 202
Contelec Nr. 183 XZ 202

Ce=Ceramic, El=Electrolytic, PETP=Polyester, PP=Polypropylen
Sal=Solid aluminium.

MANUFACTURER: Ex=Exar, ITT=Intermetall, Mot=Motorola,
NS=National Semiconductor, Ph=Philips, Ra=Raytheon,
See=Seacosee, Sie=Siemens, Sig=Signetics, Six=Siliconix,
St=Studer, Tf=Telefunken, TI=Texas Instruments.

ORIG 86/03/17

LINE AMPLIFIER TRAFOLESS 1.820.715.82

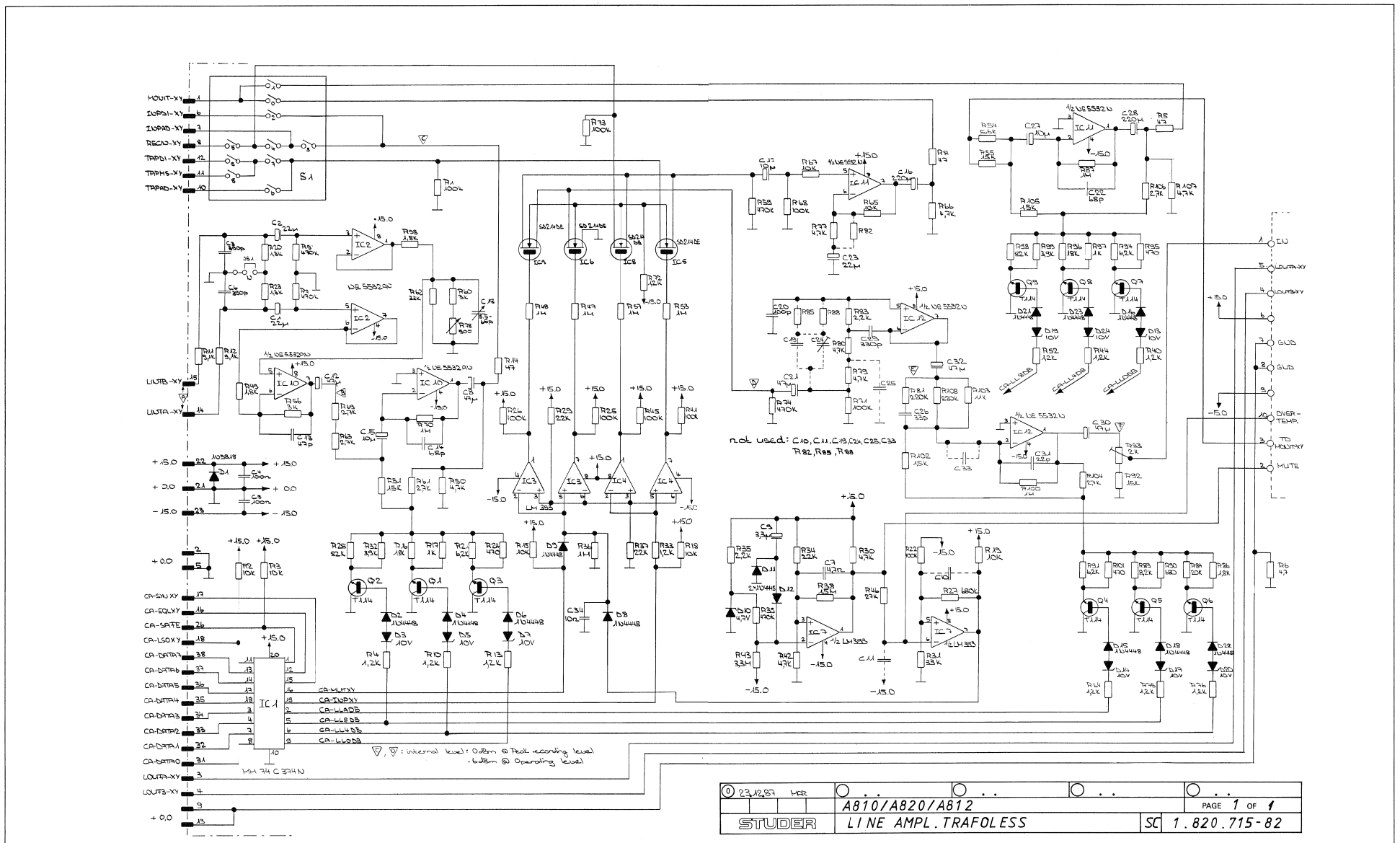

LINE AMPLIFIER TRAFOLESS 1.820.715.82

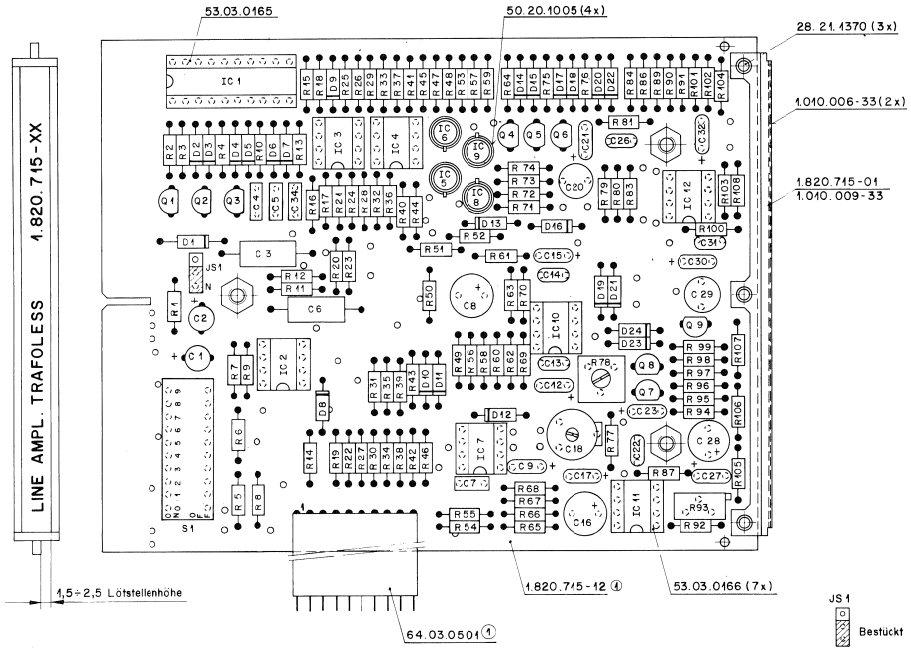

IND.	POS.NO.	PART NO.	VALUE	SPECIFICATIONS / EQUIVALENT	MANUF.
	JS.....1	54.01.0020	3 cont.	Philips Nr. 2422 025 89303 See note 1	
	J.....1	1.010.034-50		See Note 2	
	J.....2	1.010.034-50		See Note 2	
	J.....3	1.010.034-50		See Note 2	
	J.....4	1.010.034-50		See Note 2	
	J.....5	1.010.034-50		See Note 2	
	J.....6	1.010.034-50		See Note 2	
	J.....7	1.010.034-50		See Note 2	
	J.....8	1.010.034-50		See Note 2	
	J.....9	1.010.034-50		See Note 2	
	R.....1	57.11.4104	100 kOhm	5%	
	R.....2	57.11.4103	10 kOhm	5%	
	R.....3	57.11.4103	10 kOhm	5%	
	R.....4	57.11.4122	1.2 kOhm	5%	
	R.....5	57.11.4470	47 Ohm	5%	
	R.....6	57.11.4479	4.7 Ohm	5%	
	R.....7	57.11.4474	470 kOhm	5%	
	R.....8	57.11.4470	47 Ohm	5%	
	R.....9	57.11.4474	470 kOhm	5%	
	R.....10	57.11.4122	1.2 kOhm	5%	
	R.....11	57.11.3112	9.1 kOhm	1%	
	R.....12	57.11.3112	9.1 kOhm	1%	
	R.....13	57.11.4122	1.2 kOhm	5%	
	R.....14	57.11.4470	47 Ohm	5%	
	R.....15	57.11.4103	10 kOhm	5%	
	R.....16	57.11.4183	18 kOhm	5%	
	R.....17	57.11.3122	1 kOhm	1%	
	R.....18	57.11.4103	10 kOhm	5%	
	R.....19	57.11.4103	10 kOhm	5%	
	R.....20	57.11.3132	1.3 kOhm	1%	
	R.....21	57.11.3622	6.2 kOhm	1%	
	R.....22	57.11.4104	100 kOhm	5%	
	R.....23	57.11.3132	1.3 kOhm	1%	
	R.....24	57.11.3471	470 Ohm	1%	
	R.....25	57.11.4104	100 kOhm	5%	

IND.	POS.NO.	PART NO.	VALUE	SPECIFICATIONS / EQUIVALENT	MANUF.
	R.....100	57.11.4105	1 MOhm	5%	
	R.....101	57.11.3471	470 Ohm	1%	
	R.....102	57.11.3152	1.5 kOhm	1%	
	R.....103	57.11.3113	11 kOhm	1%	
	R.....104	57.11.3272	2.7 kOhm	1%	
	R.....105	57.11.3152	1.5 kOhm	1%	
	R.....106	57.11.3272	2.7 kOhm	1%	
	R.....107	57.11.4472	4.7 kOhm	5%	
	R.....108	57.11.4224	220 kOhm	5%	
	S.....1	55.01.0170		SAE-Nr. 1010-692	

IND.	POS.NO.	PART NO.	VALUE	SPECIFICATIONS / EQUIVALENT	MANUF.
	R.....26	57.11.4104	100 kOhm	5%	
	R.....27	57.11.4684	680 kOhm	5%	
	R.....28	57.11.4823	82 kOhm	5%	
	R.....29	57.11.4223	22 kOhm	5%	
	R.....30	57.11.4472	4.7 kOhm	5%	
	R.....31	57.11.4333	33 kOhm	5%	
	R.....32	57.11.3392	3.9 kOhm	1%	
	R.....33	57.11.4122	1.2 kOhm	5%	
	R.....34	57.11.4223	22 kOhm	5%	
	R.....35	57.11.4222	2.2 kOhm	5%	
	R.....36	57.11.4105	1 MOhm	5%	
	R.....37	57.11.4223	22 kOhm	5%	
	R.....38	57.11.5155	1.5 MOhm	5%	
	R.....39	57.11.4474	470 kOhm	5%	
	R.....40	57.11.4122	1.2 kOhm	5%	
	R.....41	57.11.4104	100 kOhm	5%	
	R.....42	57.11.4472	4.7 kOhm	5%	
	R.....43	57.11.5335	3.3 kOhm	5%	
	R.....44	57.11.4122	1.2 kOhm	5%	
	R.....45	57.11.4104	100 kOhm	5%	
	R.....46	57.11.4273	27 kOhm	5%	
	R.....47	57.11.4105	1 MOhm	5%	
	R.....48	57.11.4105	1 MOhm	5%	
	R.....49	57.11.3182	1.8 kOhm	1%	
	R.....50	57.11.4472	4.7 kOhm	5%	
	R.....51	57.11.3152	1.5 kOhm	1%	
	R.....52	57.11.4122	1.2 kOhm	5%	
	R.....53	57.11.4105	1 MOhm	5%	
	R.....54	57.11.3562	5.6 kOhm	5%	
	R.....55	57.11.4153	15 kOhm	2%	
	R.....56	57.11.3302	3 kOhm	1%	
	R.....57	57.11.4105	1 MOhm	5%	
	R.....58	57.11.3182	1.8 kOhm	1%	
	R.....59	57.11.4474	470 kOhm	5%	
	R.....60	57.11.3302	3 kOhm	1%	
	R.....61	57.11.3272	2.7 kOhm	1%	
	R.....62	57.11.4331	33 kOhm	2%	

Note 1 - Bridge Studer Nr. 54.01.0021
Philips Nr. 2422 024 88003

Note 2 - aC 237 B sel. for invers mode (I_{BC} = 3 mA)
VCE < 0.7 mV, IE 0 mA. VCE < 25 mV, I_C = 4 mA

Note 3 - >0Ω Ohm Potentiometer lin., 10%
Allen Bradly Nr. Q 2G 501
Bourns Nr. 3386 P-1- 501
Spectrol Nr. 63 M 501 T010

Note 4 - 2 kOhm Potentiometer lin., 10%
Bourns Nr. 3296 Z - 1 - 202
Spectrol Nr. 64 Z 202 T 000
Murata Nr. PDT 3105 Z - 1 - 202
Contelec Nr. 183 XZ 202

Ce=Ceramic, El=Electrolytic, PETP=Polyester, PP=Polypropylen
Sal=Solid aluminium.

MANUFACTURER: Ex=Exar, ITT=Intermetall, Mot=Motorola,
Ns=National Semiconductor, Ph=Philips, Ra=Raytheon,
Sus=Susco-Sosa, Sie=Siemens, Sig=Signetics, Six=Siliconix,
St=Studer, Tf=Telefunken, Ti=Texas Instruments.

DRG 87/08/31

IND.	POS.NO.	PART NO.	VALUE	SPECIFICATIONS / EQUIVALENT	MANUF.
	A.....1	1.820.862.00		Line Output Amplifier	St
	C.....1	59.22.6220	22 uF	35V, EL	
	C.....2	59.22.6220	22 uF	35V, EL	
	C.....3	59.12.7391	390 pF	1%, PS	
	C.....4	59.06.0104	100 nF	20%, PETP	
	C.....5	59.06.0104	100 nF	20%, PETP	
	C.....6	59.12.7391	390 pF	1%, PS	
	C.....7	59.06.0472	4.7 nF	20%, PETP	
	C.....8	59.22.3470	47 uF	20%, 10V, El	
	C.....9	59.26.2339	3.3 uF	16 V, SAL	
	C.....10		not used		
	C.....11		not used		
	C.....12	59.26.0470	47 uF	SAL	Ph
	C.....13	59.34.2470	47 pF	Ce	
	C.....14	59.34.2680	68 pF	5%, N150, Ce	
	C.....15	59.26.2100	10 uF	20%, 16V, Sal	Ph
	C.....16	59.22.2221	220 uF	-10%, 6V, El	
	C.....17	59.26.2100	10 uF	20%, 16V, Sal	Ph
	C.....18	59.18.0102	5.5-65pF		
	C.....19		not used		
	C.....20	59.05.1101	100 pF	1%,	
	C.....21	59.26.0470	47 uF	20%, 6.3V, Sal	Ph
	C.....22	59.34.2680	68 pF	5%, N150, Ce	
	C.....23	59.26.1220	22 uF	20%, 10V, Sal	Ph
	C.....24		not used		
	C.....25		not used		
	C.....26	59.34.2330	33 pF	Ce	
	C.....27	59.26.2100	10 uF	20%, 16V, Sal	Ph
	C.....28	59.22.2221	220 uF	-10%, 6V, El	
	C.....29	59.05.1331	330 pF	1%, PP	
	C.....30	59.26.0470	47 uF	20%, 6.3V, Sal	Ph
	C.....31	59.34.2220	22 pF	Ce	
	C.....32	59.26.0470	47 uF	20%, 6.3V, Sal	Ph
	C.....33		not used		
	C.....34	59.06.5103	10 nF	5%, 63V , PETP	

IND.	POS.NO.	PART NO.	VALUE	SPECIFICATIONS / EQUIVALENT	MANUF.
	D.....1	50.04.0512	1N5818		Mot
	D.....2	50.04.0125	1N4448		ITT+Phs+Ses
	D.....3	50.04.1114	10V Z	5%	ITT+Ses
	D.....4	50.04.0125	1N4448		ITT+Phs+Ses
	D.....5	50.04.1114	10V Z	5%	ITT+Ses
	D.....6	50.04.0125	1N4448		ITT+Phs+Ses
	D.....7	50.04.1114	10V Z	5%	ITT+Ses
	D.....8	50.04.0125	1N4448		ITT+Phs+Ses
	D.....9	50.04.0125	1N4448		ITT+Phs+Ses
	D.....10	50.04.1123	4.7V Z		Mot
	D.....11	50.04.0125	1N4448		ITT+Phs+Ses
	D.....12	50.04.0125	1N4448		ITT+Phs+Ses
	D.....13	50.04.1114	10V Z	5%	ITT+Ses
	D.....14	50.04.1114	10V Z	5%	ITT+Ses
	D.....15	50.04.0125	1N4448		ITT+Phs+Ses
	D.....16	50.04.0125	1N4448		ITT+Phs+Ses
	D.....17	50.04.1114	10V Z	5%	ITT+Ses
	D.....18	50.04.0125	1N4448		ITT+Phs+Ses
	D.....19	50.04.1114	10V Z	5%	ITT+Ses
	D.....20	50.04.1114	10V Z	5%	ITT+Ses
	D.....21	50.04.0125	1N4448		ITT+Phs+Ses
	D.....22	50.04.0125	1N4448		ITT+Phs+Ses
	D.....23	50.04.0125	1N4448		ITT+Phs+Ses
	D.....24	50.04.1114	10V Z	5%	ITT+Ses
	IC.....1	50.07.0003	MM74C374N		NS
	IC.....2	50.39.0105	NE5532AN	X85532ANB, 5532ANB	Sig+Ex+Ra
	IC.....3	50.39.0283	LM393N		Ti+NS
	IC.....4	50.39.0283	LM393N		Ti+NS
	IC.....5	50.11.0106	SD 214 DE	85D 214	Phs+Six
	IC.....6	50.11.0106	SD 214 DE	85D 214	Phs+Six
	IC.....7	50.01.0283	LM393N		Ti+NS
	IC.....8	50.11.0106	SD 214 DE	85D 214	Phs+Six
	IC.....9	50.11.0106	SD 214 DE	85D 214	Phs+Six
	IC.....10	50.39.0106	NE5532AN	X85532AN, 5532ANA	Sig+Ex+Ra
	IC.....11	50.04.0105	NE5532N	X85532N, 5532NB	Sig+Ex+Ra
	IC.....12	50.39.0106	NE5532AN	X85532AN, 5532ANB	Sig+Ex+Ra

IND.	POS.NO.	PART NO.	VALUE	SPECIFICATIONS / EQUIVALENT	MANUF.
	R.....63	57.11.3272	2.7 kOhm	2%	
	R.....64	57.11.4122	1.2 kOhm	5%	
	R.....65	57.11.4103	10 kOhm	2%	
	R.....66	57.11.4472	4.7 kOhm	5%	
	R.....67	57.11.4103	10 kOhm	5%	
	R.....68	57.11.4104	100 kOhm	5%	
	R.....69	57.11.3272	2.7 kOhm	1%	
	R.....70	57.11.4105	1 MOhm	5%	
	R.....71	57.11.4104	100 kOhm	5%	
	R.....72	57.11.4122	1.2 kOhm	5%	
	R.....73	57.11.4104	100 kOhm	5%	
	R.....74	57.11.4474	470 kOhm	5%	
	R.....75	57.11.4122	1.2 kOhm	5%	
	R.....76	57.11.4122	1.2 kOhm	5%	
	R.....77	57.11.4472	4.7 kOhm	2%	
	R.....78	58.01.6521	500 Ohm	See note 3	
	R.....79	57.11.4472	4.7 kOhm	2%	
	R.....80	57.11.4472	4.7 kOhm	2%	
	R.....81	57.11.4224	220 kOhm	2%	
	R.....82		not used		
	R.....83	57.11.4222	2.2 kOhm	2%	
	R.....84	57.11.3203	20 kOhm	5%	
	R.....85		not used		
	R.....86	57.11.3182	1.8 kOhm	1%	
	R.....87	57.11.4105	1 MOhm	5%	
	R.....88		not used		
	R.....89	57.11.4822	8.2 kOhm	5%	
	R.....90	57.11.3681	680 Ohm	1%	
	R.....91	57.11.3622	6.2 kOhm	1%	
	R.....92	57.11.4153	15 kOhm	5%	
	R.....93	58.05.2202	2 kOhm	See note 4	
	R.....94	57.11.3622	6.2 kOhm	1%	
	R.....95	57.11.3471	470 Ohm	1%	
	R.....96	57.11.4183	18 kOhm	5%	
	R.....97	57.11.3122	1 kOhm	1%	
	R.....98	57.11.4823	82 kOhm	5%	
	R.....99	57.11.3392	3.9 kOhm	1%	

LINE AMPLIFIER TRAFOLESS 1.820.715.83
–LINE OUTPUT AMPLIFIER 1.820.862.00

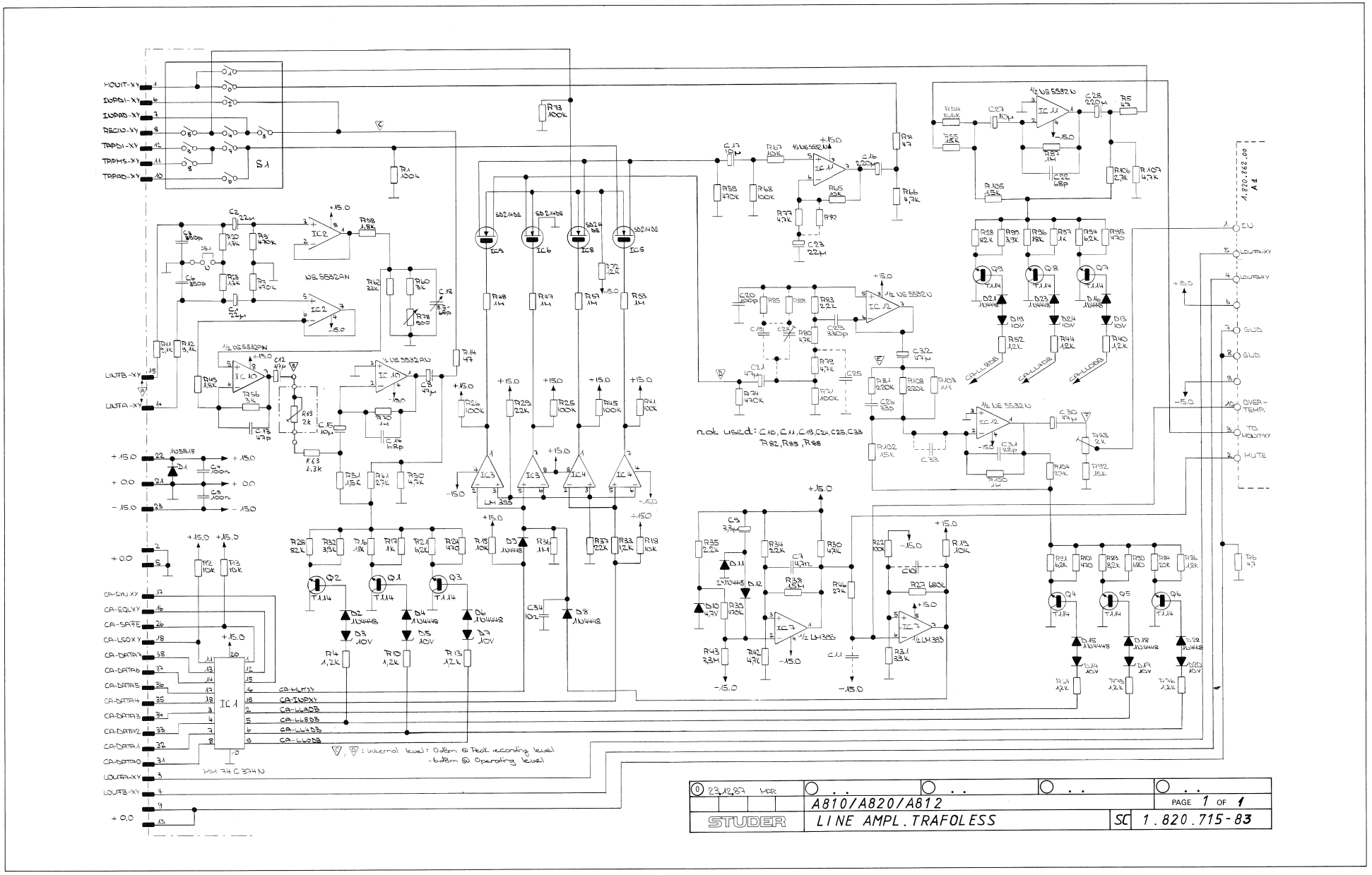

LINE AMPLIFIER TRAFOLESS 1.820.715.83
–LINE OUTPUT AMPLIFIER 1.820.862.00

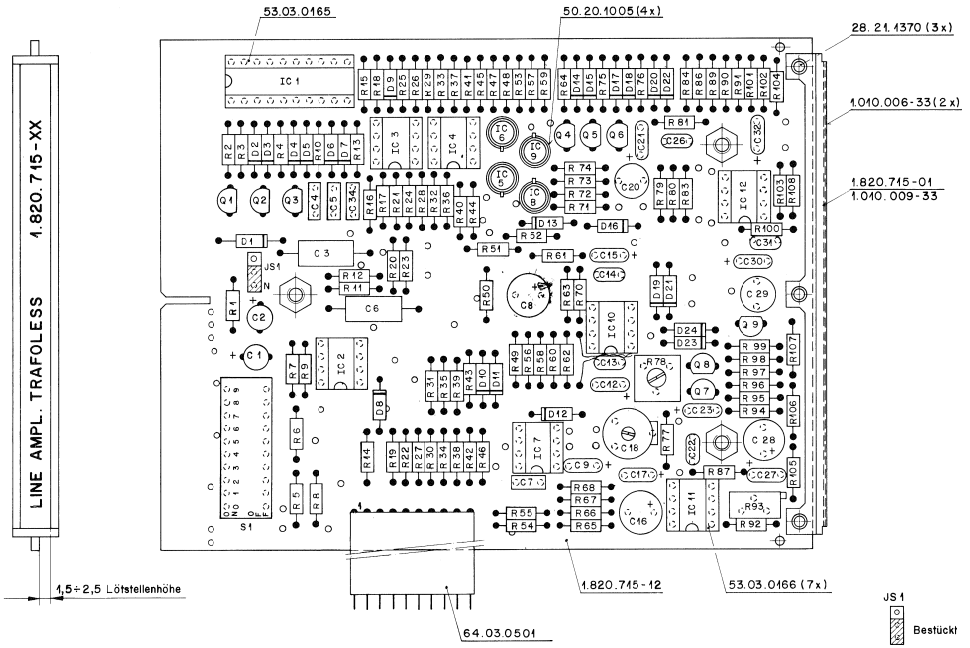

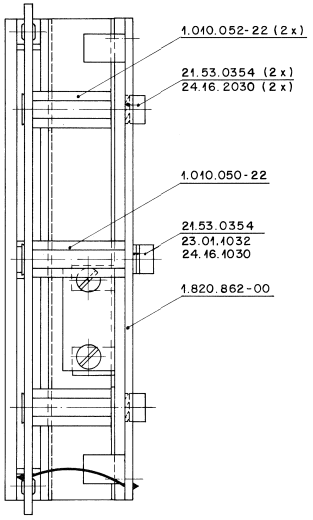

IND.	POS.NO.	PART NO.	VALUE	SPECIFICATIONS / EQUIVALENT	MANUF.
R	26	57.11.4104	100 kOhm	5%	
R	27	57.11.4684	680 kOhm	5%	
R	28	57.11.4823	82 kOhm	5%	
R	29	57.11.4223	22 kOhm	5%	
R	30	57.11.4472	4.7 kOhm	5%	
R	31	57.11.4333	33 kOhm	5%	
R	32	57.11.3392	3.9 kOhm	1%	
R	33	57.11.4122	1.2 kOhm	5%	
R	34	57.11.4223	22 kOhm	5%	
R	35	57.11.4222	2.2 kOhm	5%	
R	36	57.11.4105	1 MOhm	5%	
R	37	57.11.4223	22 kOhm	5%	
R	38	57.11.5155	1.5 MOhm	5%	
R	39	57.11.4474	470 kOhm	5%	
R	40	57.11.4127	1.2 kOhm	5%	
R	41	57.11.4104	100 kOhm	5%	
R	42	57.11.4472	4.7 kOhm	5%	
R	43	57.11.5335	3.3 kOhm	5%	
R	44	57.11.4122	1.2 kOhm	5%	
R	45	57.11.4104	100 kOhm	5%	
R	46	57.11.4273	27 kOhm	5%	
R	47	57.11.4105	1 MOhm	5%	
R	48	57.11.4105	1 MOhm	5%	
R	49	57.11.3182	1.8 kOhm	1%	
R	50	57.11.4472	4.7 kOhm	5%	
R	51	57.11.3152	1.5 kOhm	1%	
R	52	57.11.4122	1.2 kOhm	5%	
R	53	57.11.4105	1 MOhm	5%	
R	54	57.11.3562	5.6 kOhm	5%	
R	55	57.11.4153	15 kOhm	2%	
R	56	57.11.3302	3 kOhm	1%	
R	57	57.11.4105	1 MOhm	5%	
R	58	57.11.3182	1.8 kOhm	1%	
R	59	57.11.4474	470 kOhm	5%	
R	60	57.11.3302	3 kOhm	1%	
R	61	57.11.3272	2.7 kOhm	1%	
R	62	57.11.4333	33 kOhm	2%	
R	63	57.11.3432	4.3 kOhm	2%	
R	64	57.11.4122	1.2 kOhm	5%	
R	65	57.11.4103	10 kOhm	2%	
R	66	57.11.4472	4.7 kOhm	5%	
R	67	57.11.4103	10 kOhm	5%	
R	68	57.11.4104	100 kOhm	5%	
R	69	58.05.1202	2 kOhm	see note 5	
R	70	57.11.4105	1 MOhm	5%	
R	71	57.11.4104	100 kOhm	5%	
R	72	57.11.4122	1.2 kOhm	5%	
R	73	57.11.4104	100 kOhm	5%	
R	74	57.11.4474	470 kOhm	5%	
R	75	57.11.4122	1.2 kOhm	5%	
R	76	57.11.4122	1.2 kOhm	5%	
R	77	57.11.4472	4.7 kOhm	2%	
R	78	58.05.8501	500 Ohm	see note 3	
R	79	57.11.4472	4.7 kOhm	2%	
R	80	57.11.4472	4.7 kOhm	2%	
R	81	57.11.4224	220 kOhm	2%	
R	82		not used		
R	83	57.11.4222	2.2 kOhm	2%	
R	84	57.11.3203	20 kOhm	5%	
R	85		not used		
R	86	57.11.3182	1.8 kOhm	1%	
R	87	57.11.4105	1 MOhm	5%	
R	88		not used		
R	89	57.11.4822	8.2 kOhm	5%	
R	90	57.11.3681	680 Ohm	1%	
R	91	57.11.3622	6.2 kOhm	1%	
R	92	57.11.4193	15 kOhm	5%	
R	93	58.05.0202	2 kOhm	see note 4	
R	94	57.11.3622	6.2 kOhm	1%	
R	95	57.11.3471	470 Ohm	1%	
R	96	57.11.4183	18 kOhm	5%	
R	97	57.11.3102	1 kOhm	1%	
R	98	57.11.4823	82 kOhm	5%	
R	99	57.11.3392	3.9 kOhm	1%	
R	100	57.11.4105	1 MOhm	5%	
R	101	57.11.3471	470 Ohm	1%	
R	102	57.11.3152	1.5 kOhm	1%	
R	103	57.11.3113	11 kOhm	1%	
R	104	57.11.3272	2.7 kOhm	1%	
R	105	57.11.3152	1.5 kOhm	1%	
R	106	57.11.3272	2.7 kOhm	1%	
R	107	57.11.4472	4.7 kOhm	5%	
R	108	57.11.4224	220 kOhm	5%	
S	1	55.01.0170		SAE-Nr. 1010-692	

IND.	POS.NO.	PART NO.	VALUE	SPECIFICATIONS / EQUIVALENT	MANUF.
A	1	1.820.862.00		Line Output Amplifier	St
C	1	59.22.6220	22 uF	35V, EL	
C	2	59.22.6220	22 uF	35V, EL	
C	3	59.12.7391	390 pF	1%, PS	
C	4	59.06.0104	100 nF	20%, PETP	
C	5	59.06.0104	100 nF	20%, PETP	
C	6	59.12.7391	390 pF	1%, PS	
C	7	59.06.0472	4.7 nF	20%, PETP	
C	8	59.22.3470	47 uF	20%, 16V, El	
C	9	59.26.2339	3.3 uF	16 V, SAL	
C	10		not used		
C	11		not used		
C	12	59.26.0470	47 uF	SAL	Ph
C	13	59.34.2470	47 pF	Ce	
C	14	59.34.2680	68 pF	5%, N150, Ce	
C	15	59.26.2100	10 uF	20%, 16V, Sal	Ph
C	16	59.22.2221	220 uF	-10%, 6V, El	
C	17	59.26.2100	10 uF	20%, 16V, Sal	Ph
C	18	59.18.0102	5x5-65pF		
C	19		not used		
C	20	59.05.1101	100 pF	1%,	
C	21	59.26.0470	47 uF	20%, 6.3V, Sal	Ph
C	22	59.34.2680	68 pF	5%, N150, Ce	
C	23	59.26.1220	22 uF	20%, 10V, Sal	Ph
C	24		not used		
C	25		not used		
C	26	59.34.2330	33 pF	Ce	
C	27	59.26.2100	10 uF	20%, 16V, Sal	Ph
C	28	59.22.2221	220 uF	-10%, 6V, El	
C	29	59.05.1331	330 pF	1%, PP	
C	30	59.26.0470	47 uF	20%, 6.3V, Sal	Ph
C	31	59.34.2220	22 pF	Ce	
C	32	59.26.0470	47 uF	20%, 6.3V, Sal	Ph
C	33		not used		
C	34	59.06.5103	10 nF	5%, 63V, PETP	

IND.	POS.NO.	PART NO.	VALUE	SPECIFICATIONS / EQUIVALENT	MANUF.
D	1	50.04.0512	1N5818		Mot
D	2	50.04.0125	1N4448		ITT+Phi Ses
D	3	50.04.1114	10V Z	5%	ITT Ses
D	4	50.04.0125	1N4448		ITT+Phi Ses
D	5	50.04.1114	10V Z	5%	ITT Ses
D	6	50.04.0125	1N4448		ITT+Phi Ses
D	7	50.04.1114	10V Z	5%	ITT Ses
D	8	50.04.0125	1N4448		ITT+Phi Ses
D	9	50.04.0125	1N4448		ITT+Phi Ses
D	10	50.04.1123	4.7V Z		Mot
D	11	50.04.0125	1N4448		ITT+Phi Ses
D	12	50.04.0125	1N4448		ITT+Phi Ses
D	13	50.04.1114	10V Z	5%	ITT Ses
D	14	50.04.1114	10V Z	5%	ITT Ses
D	15	50.04.0125	1N4448		ITT+Phi Ses
D	16	50.04.0125	1N4448		ITT+Phi Ses
D	17	50.04.1114	10V Z	5%	ITT Ses
D	18	50.04.0125	1N4448		ITT+Phi Ses
D	19	50.04.1114	10V Z	5%	ITT Ses
D	20	50.04.1114	10V Z	5%	ITT Ses
D	21	50.04.0125	1N4448		ITT+Phi Ses
D	22	50.04.0125	1N4448		ITT+Phi Ses
D	23	50.04.0125	1N4448		ITT+Phi Ses
D	24	50.04.1114	10V Z	5%	ITT Ses
IC	1	50.31.0003	M74C374N		NS
IC	2	50.04.0105	NE5532AN	X85532ANB, 5532ANB	Sig+Ex+Ra
IC	3	50.05.0283	LM393N		Ti+NS
IC	4	50.05.0283	LM393N		Ti+NS
IC	5	50.31.0106	SO 214 QE	BSD 214	Ph+Six
IC	6	50.31.0106	SO 214 QE	BSD 214	Ph+Six
IC	7	50.05.0283	LM393N		Ti+NS
IC	8	50.31.0106	SO 214 QE	BSD 214	Ph+Six
IC	9	50.31.0106	SO 214 QE	BSD 214	Ph+Six
IC	10	50.04.0105	NE5532AN	X85532AN, 5532ANB	Sig+Ex+Ra
IC	11	50.04.0105	NE5532N	X85532N, 5532NB	Sig+Ex+Ra
IC	12	50.04.0105	NE5532AN	X85532AN, 5532ANB	Sig+Ex+Ra

IND.	POS.NO.	PART NO.	VALUE	SPECIFICATIONS / EQUIVALENT	MANUF.
JS	1	54.01.0020	3 cont.	Philips Nr. 2422 025 89303 see note 1	
Q	1	1.010.034.90		see note 2	
Q	2	1.010.034.90		see note 2	
Q	3	1.010.034.90		see note 2	
Q	4	1.010.034.90		see note 2	
Q	5	1.010.034.90		see note 2	
Q	6	1.010.034.90		see note 2	
Q	7	1.010.034.90		see note 2	
Q	8	1.010.034.90		see note 2	
Q	9	1.010.034.90		see note 2	
R	1	57.11.4104	100 kOhm	5%	
R	2	57.11.4103	10 kOhm	5%	
R	3	57.11.4103	10 kOhm	5%	
R	4	57.11.4122	1.2 kOhm	5%	
R	5	57.11.4470	47 Ohm	5%	
R	6	57.11.4479	4.7 Ohm	5%	
R	7	57.11.4474	470 kOhm	5%	
R	8	57.11.4470	47 Ohm	5%	
R	9	57.11.4474	470 kOhm	5%	
R	10	57.11.4122	1.2 kOhm	5%	
R	11	57.11.3912	9.1 kOhm	1%	
R	12	57.11.3912	9.1 kOhm	1%	
R	13	57.11.4122	1.2 kOhm	5%	
R	14	57.11.4470	47 Ohm	5%	
R	15	57.11.4103	10 kOhm	5%	
R	16	57.11.4183	18 kOhm	5%	
R	17	57.11.3102	1 kOhm	1%	
R	18	57.11.4103	10 kOhm	5%	
R	19	57.11.4103	10 kOhm	5%	
R	20	57.11.3132	1.3 kOhm	1%	
R	21	57.11.3622	6.2 kOhm	1%	
R	22	57.11.4124	100 kOhm	5%	
R	23	57.11.3132	1.3 kOhm	1%	
R	24	57.11.3471	470 Ohm	1%	
R	25	57.11.4124	100 kOhm	5%	

IND.	POS.NO.	PART NO.	VALUE	SPECIFICATIONS / EQUIVALENT	MANUF.

Note 1 - Bridge Stutzr Nr. 94.01.0021
Philips Nr. 2422 024 88003

Note 2 - BC 237 B sel. for invers mode (I_{BC} = 3 mA)
V_{CE} < 0.7 mV, I_E 0 mA. V_{CE} < 25 mV, I_E 4 mA

Note 3 - 500 Ohm Potentiometer lin., 10%
Allan Bradly Nr. E 20 501
Bourns Nr. 3386 F-L- 501
Spectrol Nr. 63 M 501 T010

Note 4 - 2 kOhm Potentiometer lin., 10%
Bourns Nr. 3296 Z - 1 - 202
Spectrol Nr. 64 Z 202 T 000
Murata Nr. PDT 3105 Z - 1 - 202
Contelec Nr. 193 XZ 202

Note 5 - 2 kOhm Potentiometer lin., 10%
Bourns Nr. 3296 Y - 1 - 202
Spectrol Nr. 64 Y 202 T 000
Murata Nr. PDT 3105 Y - 1 - 202
Contelec Nr. 193 WZ 202

Ce=Ceramic, El=Electrolytic, PETP=Polyester, PP=Polypropylen
Sal=Solid aluminium

MANUFACTURER: Ex=Exar, ITT=Intermetall, Mot=Motorola,
NS=National Semiconductor, Ph=Philips, Ra=Raytheon,
Ses=Isoscoss, Sie=Siemens, Sig=Signetics, Six=Siliconix,
St=Studer, Te=Telefunken, Ti=Texas Instruments.

DRN 88/08/31

LINE OUTPUT AMPLIFIER 1.820.862.00

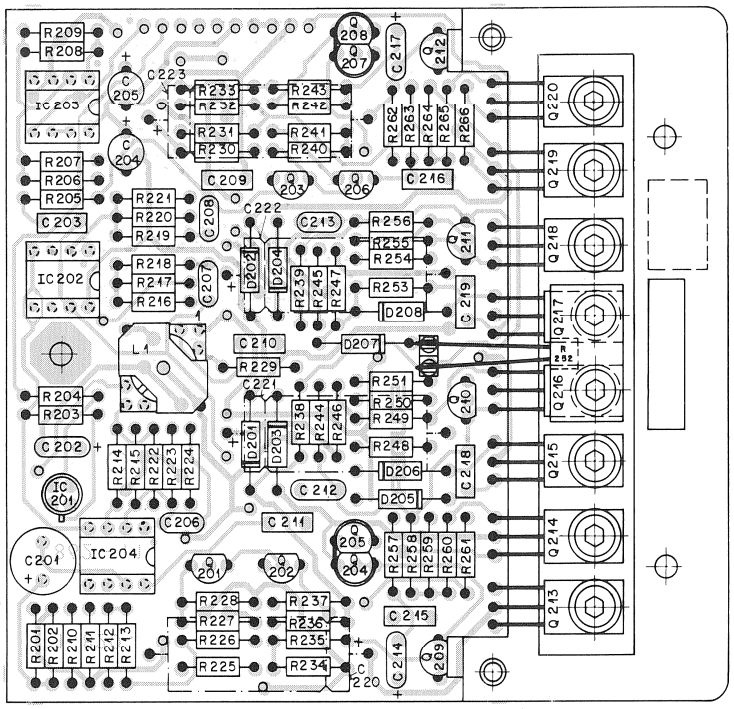

IND.	POS.NO.	PART NO.	VALUE	SPECIFICATIONS / EQUIVALENT	MANUF.
C	0201	59-22-3221	220 uF	-20%, 10V, El	
C	0202	59-26-0680	68 uF	-20%, 6.3V, Sal	Ph
C	0203	59-06-0102	1 nF	10%, 63V, PETP	
C	0204	59-22-6220	22 uF	-20%, 35V, El	
C	0205	59-22-6220	22 uF	-20%, 35V, El	
C	0206	59-34-2181	180 pF	5%, 63V, Cer	
C	0207	59-34-4101	100 pF	5%, 63V, Cer	
C	0208	59-34-4101	100 pF	5%, 63V, Cer	
C	0209	59-06-0104	0.1 uF	10%, 63V, PETP	
C	0210	59-06-0153	15 nF	10%, 63V, PETP	
C	0211	59-06-0104	0.1 uF	10%, 63V, PETP	
C	0212	59-34-4221	220 pF	5%, 63V, Cer	
C	0213	59-34-4221	220 pF	5%, 63V, Cer	
C	0214	59-26-2100	10 u	-20%, 16V, Sal	Ph
C	0215	59-06-0104	0.1 uF	10%, 63V, PETP	
C	0216	59-06-0104	0.1 uF	10%, 63V, PETP	
C	0217	59-26-2100	10 uF	-20%, 16V, Sal	Ph
C	0218	59-06-0104	0.1 uF	10%, 63V, PETP	
C	0219	59-06-0104	0.1 uF	10%, 63V, PETP	
C	0220	59-25-5221	220 uF	-10%, 40V, El	
C	0221	59-25-5221	220 uF	-10%, 40V, El	
C	0222	59-25-5221	220 uF	-10% 40V, El	
C	0223	59-25-5221	220 uF	-10%, 40V, El	
D	0201	50-04-0512	1N 5818	1N 5819	Mot
D	0202	50-04-0512	1N 5818	1N 5819	Mot
D	0203	50-04-0512	1N 5818	1N 5819	Mot
D	0204	50-04-0512	1N 5818	1N 5819	Mot
D	0205	50-04-0512	1N 5818	1N 5819	Mot
D	0206	50-04-0512	1N 5818	1N 5819	Mot
D	0207	50-04-0512	1N 5818	1N 5819	Mot
D	0208	50-04-0512	1N 5818	1N 5819	Mot
IC	0201	50-11-0106	SN214-DF	RSN214	Sig,Ph
IC	0202	50-09-0105	NE5532 N	XR 5532 N, 5532 NB	Sig,Ex,Ra
IC	0203	50-09-0105	NE5532 N	XR 5532 N, 5532 NB	Sig,Ex,Ra
IC	0204	50-09-0101	LF 353 N	TL 072 CP	NS,TI
L	0201	1.022.273.00	3*150 mH		St
Q	0201	50-03-0436	BC 237 B	BC 547 B	Mot,Ph,Sie,Tf
Q	0202	50-03-0351	BC 327-25		Sie,Mot
Q	0203	50-03-0436	BC 237 B	BC 547 B	Mot,Ph,Sie,Tf
Q	0204	50-03-0516	BC 337	See Note 1	Sie
Q	0205	50-03-0516	BC 337	See Note 1	Sie
Q	0206	50-03-0351	BC 327-25		Sie,Mot
Q	0207	50-03-0516	BC 337	See Note 1	Sie
Q	0208	50-03-0516	BC 337	See Note 1	Sie
Q	0209	50-03-0516	BC 337	See Note 1	Sie
Q	0210	50-03-0448	BC 516		Sie,TI
Q	0211	50-03-0448	BC 516		Sie,TI
Q	0212	50-03-0516	BC 337	See Note 1	Sie
Q	0213	50-03-0451	BD 139		Ph
Q	0214	50-03-0452	BD 140		Ph
Q	0215	50-03-0504	BD 679		SGS,Ph
Q	0216	50-03-0505	BD 680		SGS,Ph
Q	0217	50-03-0504	BD 679		SGS,Ph
Q	0218	50-03-0505	BD 680		SGS,Ph
Q	0219	50-03-0451	BD 139		Ph
Q	0220	50-03-0452	BD 140		Ph
R	0201	57-11-4470	47 Ohm	5%	
R	0202	57-11-4472	4.7 kOhm	5%	
R	0203	57-11-4102	1 kOhm	5%	
R	0204	57-11-4105	1 MOhm	5%	
R	0205	57-11-4152	1.5 kOhm	5%	
R	0206	57-11-3682	6.8 kOhm	1%	
R	0207	57-11-3682	6.8 kOhm	1%	
R	0208	57-11-3682	6.8 kOhm	1%	
R	0209	57-11-3682	6.8 kOhm	1%	
R	0210	57-11-3103	10 kOhm	1%	
R	0211	57-11-3472	4.7 kOhm	1%	
R	0212	57-11-3472	4.7 kOhm	1%	
R	0213	57-11-3103	10 kOhm	1%	
R	0214	57-11-4102	1 kOhm	5%	
R	0215	57-11-4152	1.5 kOhm	5%	
R	0216	57-11-3153	15 kOhm	1%	
R	0217	57-11-3682	6.8 kOhm	1%	
R	0218	57-11-4102	1 kOhm	5%	
R	0219	57-11-4102	1 kOhm	5%	
R	0220	57-11-3682	6.8 kOhm	1%	
R	0221	57-11-3153	15 kOhm	1%	
R	0222	57-11-4221	220 Ohm	5%	
R	0223	57-11-4334	330 kOhm	5%	
R	0224	57-11-4102	1 kOhm	5%	
R	0225	57-19-0100	10 Ohm	5%	See Note 2
R	0226	57-11-4479	4.7 Ohm	5%	
R	0227	57-11-3222	2.2 kOhm	1%	
R	0228	57-11-3132	1.3 kOhm	1%	
R	0229	57-11-4470	47 Ohm	5%	
R	0230	57-19-0100	10 Ohm	5%	See Note 2
R	0231	57-11-4479	4.7 Ohm	5%	
R	0232	57-11-3222	2.2 kOhm	1%	
R	0233	57-11-3132	1.3 kOhm	1%	
R	0234	57-11-4223	22 kOhm	5%	
R	0235	57-11-4223	22 kOhm	5%	
R	0236	57-11-4821	820 Ohm	5%	
R	0237	57-11-4220	22 Ohm	5%	
R	0238	57-11-4683	68 kOhm	5%	
R	0239	57-11-4683	68 kOhm	5%	
R	0240	57-11-4821	820 Ohm	5%	
R	0241	57-11-4220	22 Ohm	5%	
R	0242	57-11-4223	22 kOhm	5%	
R	0243	57-11-4223	22 kOhm	5%	
R	0244	57-11-4333	33 kOhm	5%	
R	0245	57-11-4333	33 kOhm	5%	
R	0246	57-19-0100	10 Ohm	5%	See Note 2
R	0247	57-19-0100	10 Ohm	5%	See Note 2
R	0248	57-11-4100	10 Ohm	5%	
R	0249	57-11-4100	10 Ohm	5%	
R	0250	57-11-4333	33 kOhm	5%	
R	0251	57-11-4273	27 kOhm	5%	
R	0252	57-99-0220	11.2 kOhm		See Note 3
R	0253	57-11-4100	10 Ohm	5%	
R	0254	57-11-4100	10 Ohm	5%	
R	0255	57-11-4333	33 kOhm	5%	
R	0256	57-11-4273	27 kOhm	5%	
R	0257	57-11-4101	100 Ohm	5%	
R	0258	57-11-4472	4.7 kOhm	5%	
R	0259	57-19-0100	10 Ohm	5%	See Note 2
R	0260	57-19-0100	10 Ohm	5%	See Note 2
R	0261	57-11-4271	270 Ohm	5%	
R	0262	57-11-4101	100 Ohm	5%	
R	0263	57-11-4472	4.7 kOhm	5%	
R	0264	57-19-0100	10 Ohm	5%	See Note 2
R	0265	57-19-0100	10 Ohm	5%	See Note 2
R	0266	57-11-4271	270 Ohm	5%	

Note 1 - Should be replaced as set. (Q4, Q5, Q9 matched) or (Q7, Q8, Q12 matched)

Note 2 - Has to be replaced by Originaltype or Philips-Type Nr. 2322 205 13109

Note 3 - NTC Thermistor Philips-Nr. 2322 640 90005

Cer=Ceramic, El=Electrolytic, PETP=Polyesterfilm, Sal=Solid-Aluminium.

MANUFACTURER: Ex=Exar, Mot=Motorola, NS=National Semiconductor, Ph=Philips, Ra=Raytheon, SGS=SGS/Ates, Sig=Signetics, St=Studer, Tf=Telefunken, TI=Texas Instruments.

DRIG 85/04/09

STUDER (00) 85/04/09 BBT LINE OUTPUT AMPLIFIER 1.820.862.00

LINE INPUT CONNECTION BOARD 1.820.863.00

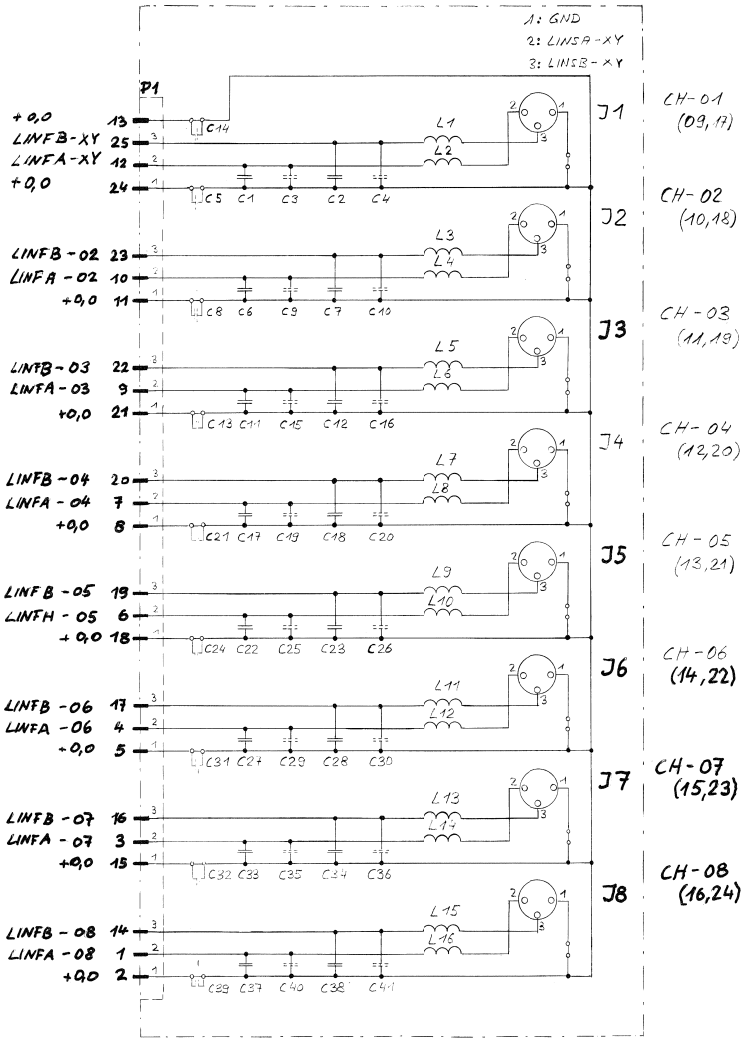

6.10.86					
STUDER	LINE INPUT CONNECTION BOARD		SC	1.820.863-00	PAGE 1 OF 1

LINE INPUT CONNECTION BOARD 1.820.863.00

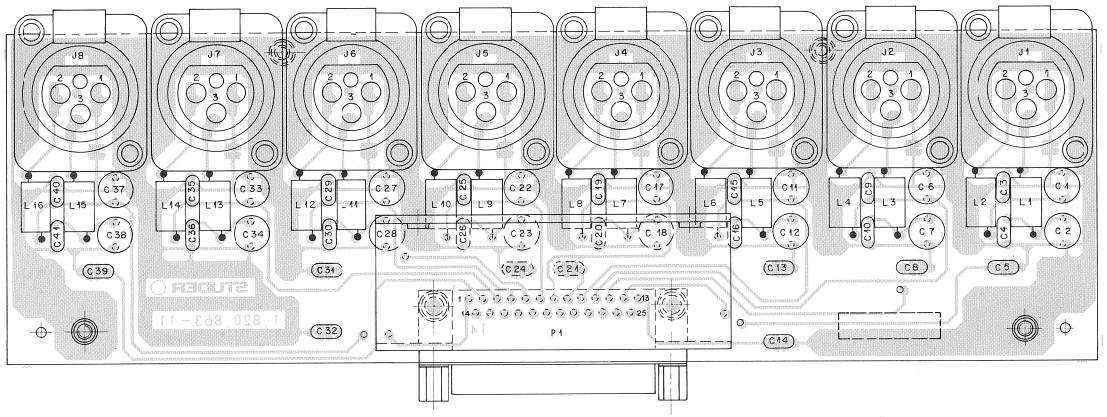

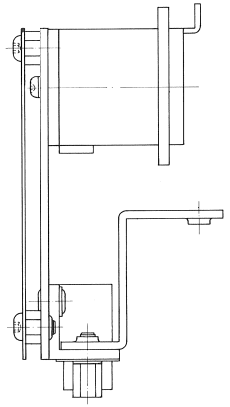

IND.	POS.NO.	PART NO.	VALUE	SPECIFICATIONS / EQUIVALENT	MANUF.
	C.....1	59.05.1221	220 pF	1%, 630V, PP	
	C.....2	59.05.1221	220 pF	1%, 630V, PP	
	C.....3		not used		
	C.....4		not used		
	C.....5		not used		
	C.....6	59.05.1221	220 pF	1%, 630V, PP	
	C.....7	59.05.1221	220 pF	1%, 630V, PP	
	C.....8		not used		
	C.....9		not used		
	C.....10		not used		
	C.....11	59.05.1221	220 pF	1%, 630V, PP	
	C.....12	59.05.1221	220 pF	1%, 630V, PP	
	C.....13		not used		
	C.....14		not used		
	C.....15		not used		
	C.....16		not used		
	C.....17	59.05.1221	220 pF	1%, 630V, PP	
	C.....18	59.05.1221	220 pF	1%, 630V, PP	
	C.....19		not used		
	C.....20		not used		
	C.....21		not used		
	C.....22	59.05.1221	220 pF	1%, 630V, PP	
	C.....23	59.05.1221	220 pF	1%, 630V, PP	
	C.....24		not used		
	C.....25		not used		
	C.....26		not used		
	C.....27	59.05.1221	220 pF	1%, 630V, PP	
	C.....28	59.05.1221	220 pF	1%, 630V, PP	
	C.....29		not used		
	C.....30		not used		
	C.....31		not used		
	C.....32		not used		
	C.....33	59.05.1221	220 pF	1%, 630V, PP	
	C.....34	59.05.1221	220 pF	1%, 630V, PP	
	C.....35		not used		
	C.....36		not used		
	C.....37	59.05.1221	220 pF	1%, 630V, PP	

IND.	POS.NO.	PART NO.	VALUE	SPECIFICATIONS / EQUIVALENT	MANUF.
	C.....38	59.05.1221	220 pF	1%, 630V, PP	
	C.....39		not used		
	C.....40		not used		
	C.....41		not used		
	J.....1	54.21.2002	3 cont.	XLR Connector, Neutrik nr. NC 3 FD - /	
	J.....2	54.21.2002	3 cont.	XLR Connector, Neutrik nr. NC 3 FD - /	
	J.....3	54.21.2002	3 cont.	XLR Connector, Neutrik nr. NC 3 FD - /	
	J.....4	54.21.2002	3 cont.	XLR Connector, Neutrik nr. NC 3 FD - /	
	J.....5	54.21.2002	3 cont.	XLR Connector, Neutrik nr. NC 3 FD - /	
	J.....6	54.21.2002	3 cont.	XLR Connector, Neutrik nr. NC 3 FD - /	
	J.....7	54.21.2002	3 cont.	XLR Connector, Neutrik nr. NC 3 FD - /	
	J.....8	54.21.2002	3 cont.	XLR Connector, Neutrik nr. NC 3 FD - /	
	L.....1	62.01.0115		HF-Coil, Philips nr. 4312 020 36700	
	L.....2	62.01.0115		HF-Coil, Philips nr. 4312 020 36700	
	L.....3	62.01.0115		HF-Coil, Philips nr. 4312 020 36700	
	L.....4	62.01.0115		HF-Coil, Philips nr. 4312 020 36700	
	L.....5	62.01.0115		HF-Coil, Philips nr. 4312 020 36700	
	L.....6	62.01.0115		HF-Coil, Philips nr. 4312 020 36700	
	L.....7	62.01.0115		HF-Coil, Philips nr. 4312 020 36700	
	L.....8	62.01.0115		HF-Coil, Philips nr. 4312 020 36700	
	L.....9	62.01.0115		HF-Coil, Philips nr. 4312 020 36700	
	L.....10	62.01.0115		HF-Coil, Philips nr. 4312 020 36700	
	L.....11	62.01.0115		HF-Coil, Philips nr. 4312 020 36700	
	L.....12	62.01.0115		HF-Coil, Philips nr. 4312 020 36700	
	L.....13	62.01.0115		HF-Coil, Philips nr. 4312 020 36700	
	L.....14	62.01.0115		HF-Coil, Philips nr. 4312 020 36700	
	L.....15	62.01.0115		HF-Coil, Philips nr. 4312 020 36700	
	L.....16	62.01.0115		HF-Coil, Philips nr. 4312 020 36700	
	P.....1	54.13.0013	25 cont.	D-Type, AMP nr. 164 494 - 1	

PP=Polypropylene

ORIG 86/10/06

LINE OUTPUT CONNECTION BOARD 1.820.864.00

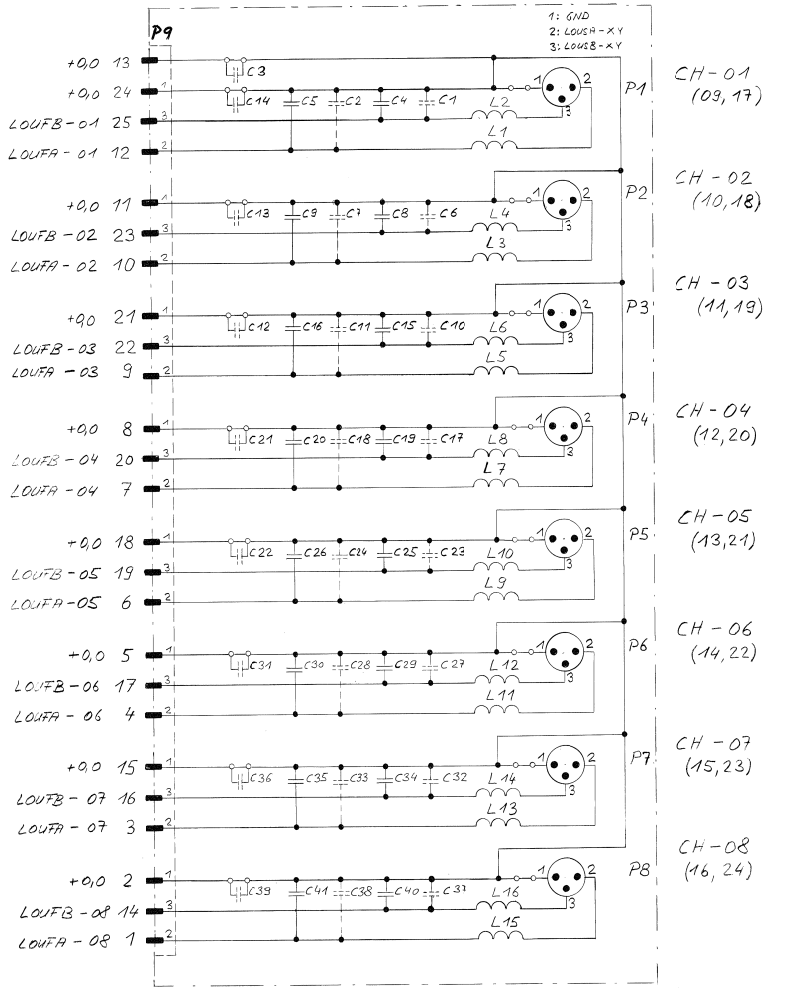

0 6.10.86 "Hägi"	. .	. .	. .	. .	
				PAGE 1 OF 1	
STUDER	LINE OUTPUT CONNECTION BOARD		SC	1.820.864-00	

LINE OUTPUT CONNECTION BOARD 1.820.864.00

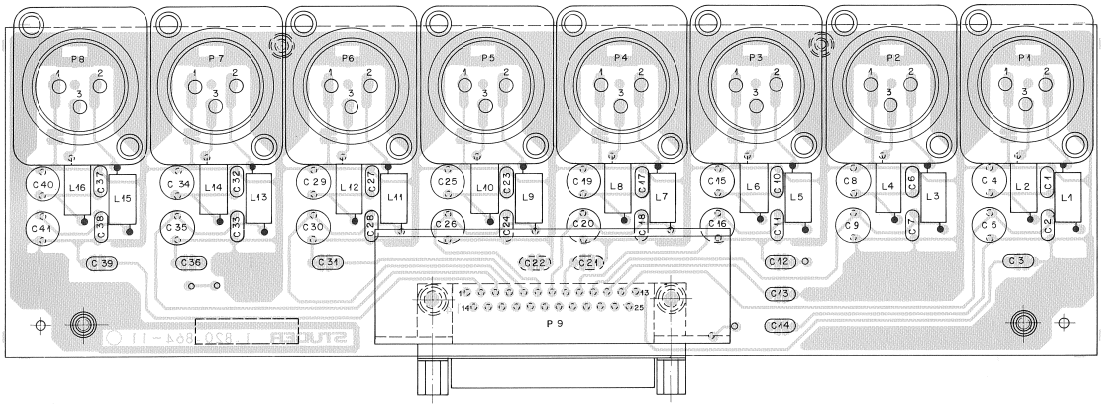

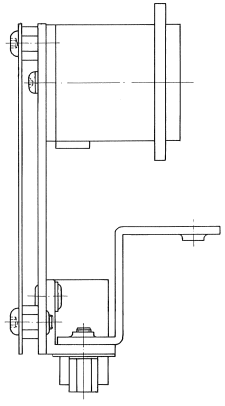

IND.	POS.NO.	PART NO.	VALUE	SPECIFICATIONS / EQUIVALENT	MANUF.
C	1		not used		
C	2		not used		
C	3		not used		
C	4	59.05.1221	220 pF	1%, 630V, PP	
C	5	59.05.1221	220 pF	1%, 630V, PP	
C	6		not used		
C	7		not used		
C	8	59.05.1221	220 pF	1%, 630V, PP	
C	9	59.05.1221	220 pF	1%, 630V, PP	
C	10		not used		
C	11		not used		
C	12		not used		
C	13		not used		
C	14		not used		
C	15	59.05.1221	220 pF	1%, 630V, PP	
C	16	59.05.1221	220 pF	1%, 630V, PP	
C	17		not used		
C	18		not used		
C	19	59.05.1221	220 pF	1%, 630V, PP	
C	20	59.05.1221	220 pF	1%, 630V, PP	
C	21		not used		
C	22		not used		
C	23		not used		
C	24		not used		
C	25	59.05.1221	220 pF	1%, 630V, PP	
C	26	59.05.1221	220 pF	1%, 630V, PP	
C	27		not used		
C	28		not used		
C	29	59.05.1221	220 pF	1%, 630V, PP	
C	30	59.05.1221	220 pF	1%, 630V, PP	
C	31		not used		
C	32		not used		
C	33		not used		
C	34	59.05.1221	220 pF	1%, 630V, PP	
C	35	59.05.1221	220 pF	1%, 630V, PP	
C	36		not used		
C	37		not used		

IND.	POS.NO.	PART NO.	VALUE	SPECIFICATIONS / EQUIVALENT	MANUF.
C	38		not used		
C	39		not used		
C	40	59.05.1221	220 pF	1%, 630V, PP	
C	41	59.05.1221	220 pF	1%, 630V, PP	
L	1	62.01.0115		HF-Coil, Philips nr. 4312 020 36700	
L	2	62.01.0115		HF-Coil, Philips nr. 4312 020 36700	
L	3	62.01.0115		HF-Coil, Philips nr. 4312 020 36700	
L	4	62.01.0115		HF-Coil, Philips nr. 4312 020 36700	
L	5	62.01.0115		HF-Coil, Philips nr. 4312 020 36700	
L	6	62.01.0115		HF-Coil, Philips nr. 4312 020 36700	
L	7	62.01.0115		HF-Coil, Philips nr. 4312 020 36700	
L	8	62.01.0115		HF-Coil, Philips nr. 4312 020 36700	
L	9	62.01.0115		HF-Coil, Philips nr. 4312 020 36700	
L	10	62.01.0115		HF-Coil, Philips nr. 4312 020 36700	
L	11	62.01.0115		HF-Coil, Philips nr. 4312 020 36700	
L	12	62.01.0115		HF-Coil, Philips nr. 4312 020 36700	
L	13	62.01.0115		HF-Coil, Philips nr. 4312 020 36700	
L	14	62.01.0115		HF-Coil, Philips nr. 4312 020 36700	
L	15	62.01.0115		HF-Coil, Philips nr. 4312 020 36700	
L	16	62.01.0115		HF-Coil, Philips nr. 4312 020 36700	
P	1	54.21.2001	3 cont.	XLR Connector, Neutrik nr. NC 3 MD - V	
P	2	54.21.2001	3 cont.	XLR Connector, Neutrik nr. NC 3 MD - V	
P	3	54.21.2001	3 cont.	XLR Connector, Neutrik nr. NC 3 MD - V	
P	4	54.21.2001	3 cont.	XLR Connector, Neutrik nr. NC 3 MD - V	
P	5	54.21.2001	3 cont.	XLR Connector, Neutrik nr. NC 3 MD - V	
P	6	54.21.2001	3 cont.	XLR Connector, Neutrik nr. NC 3 MD - V	
P	7	54.21.2001	3 cont.	XLR Connector, Neutrik nr. NC 3 MD - V	
P	8	54.21.2001	3 cont.	XLR Connector, Neutrik nr. NC 3 MD - V	
P	9	54.13.0013	25 cont.	D-Type, AMP nr. 164 494 - 1	

PP=Polypropylene

ORIG 86/10/06

LEVEL DIAGRAMS RECORD AMPLIFIER

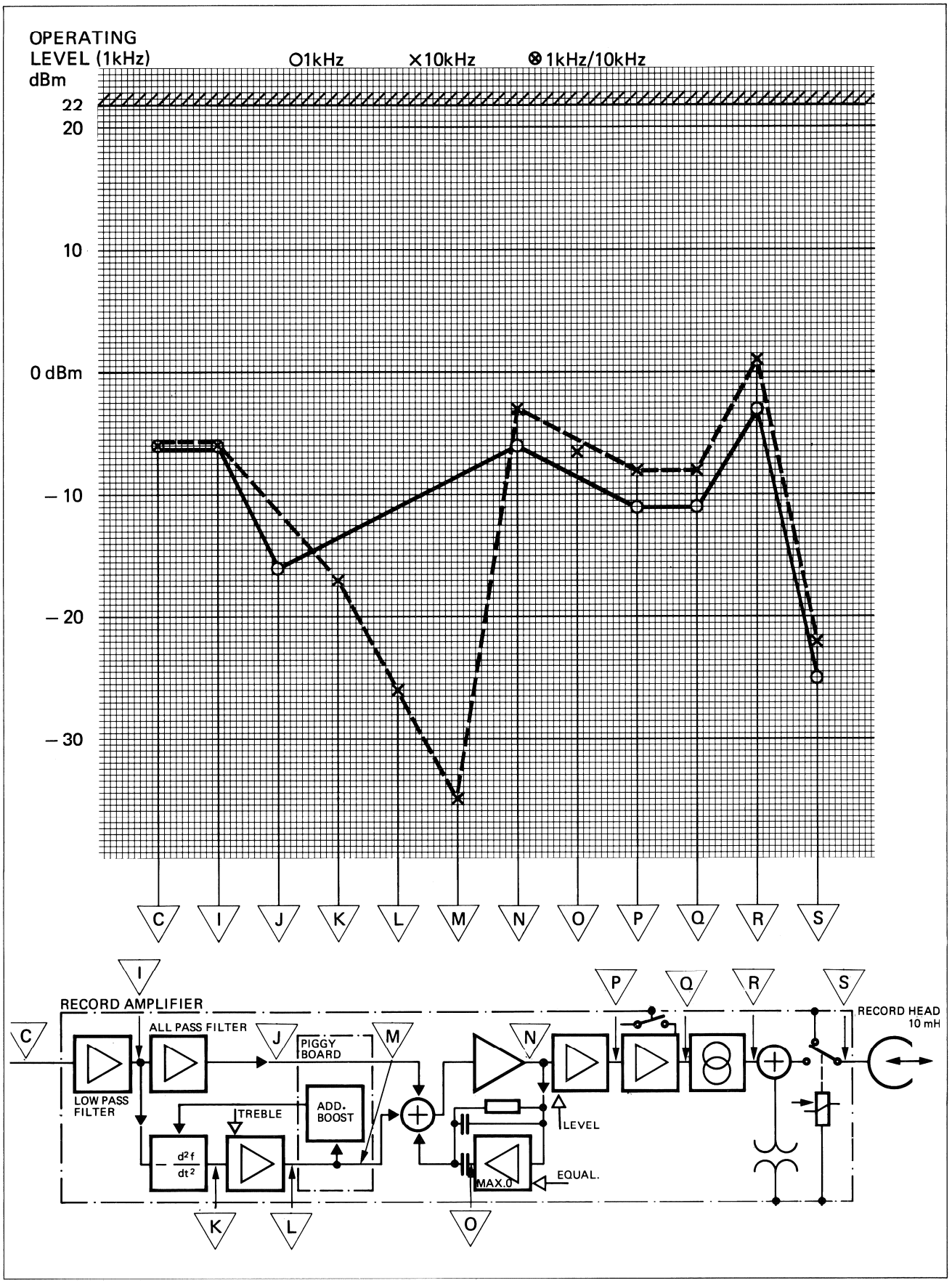

RECORD AMPLIFIER HX PRO 1.820.811.00

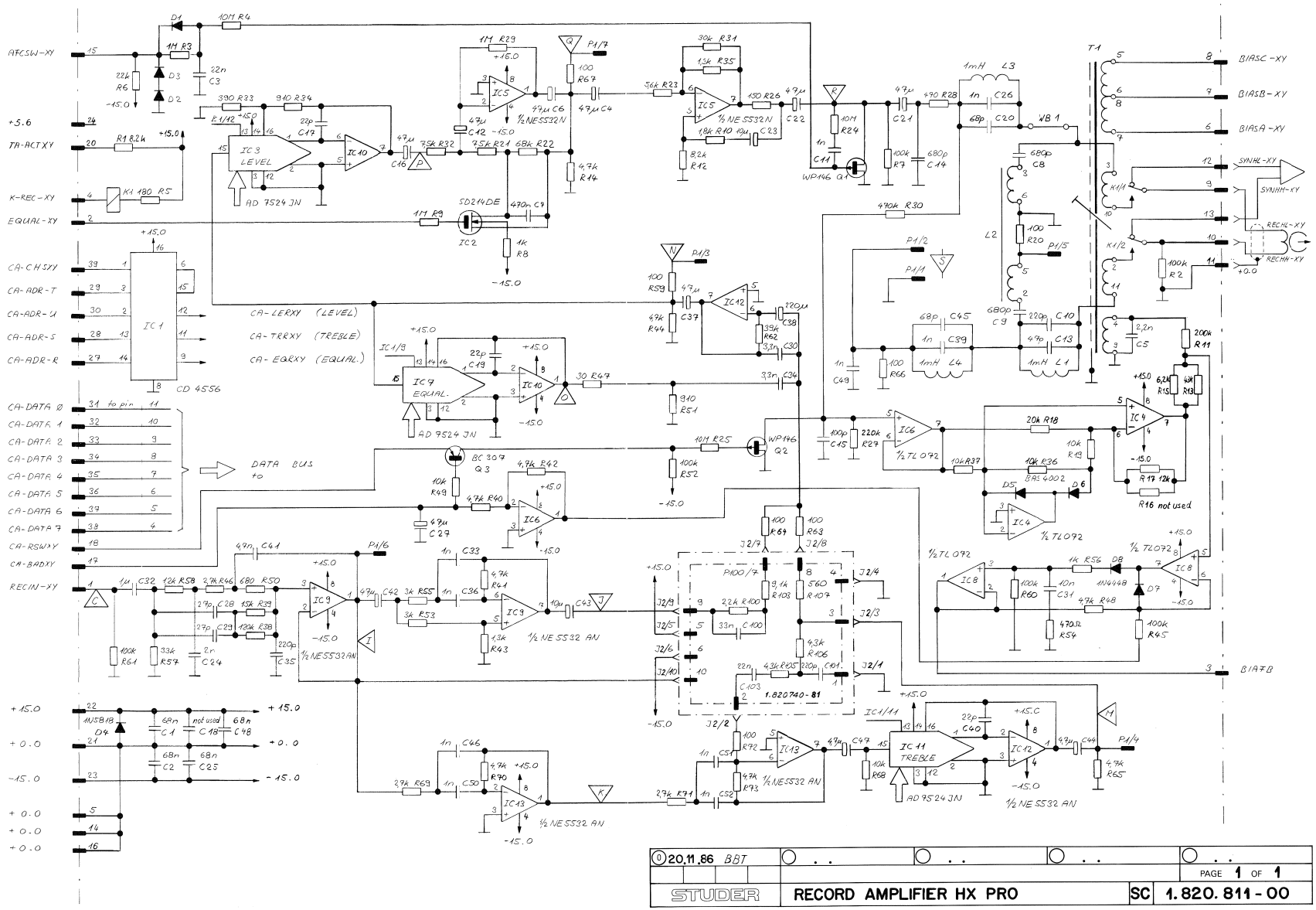

RECORD AMPLIFIER HX PRO 1.820.811.00

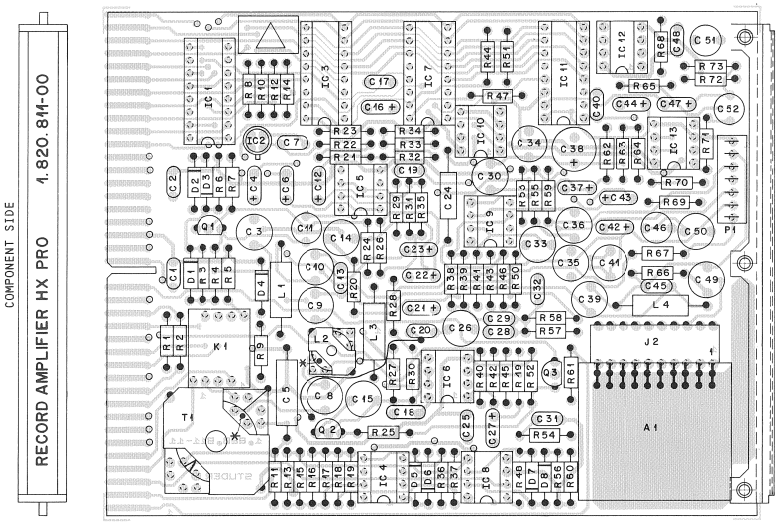

* YELLOW DOT

IND.	POS.NO.	PART NO.	VALUE	SPECIFICATIONS / EQUIVALENT	MANUF.
	A.....1	1.820.740.81		Adaptation Board	St
	C.....1	59.06.0683	68 nF	20%, PETP	
	C.....2	59.06.0683	68 nF	20%, PETP	
	C.....3	59.05.1223	22 nF	1%, PP	
	C.....4	59.26.0470	47 uF	20%, 6.3 V, Sal	Ph
	C.....5	59.12.9222	2.2 nF	1%, 500 V, PS	
	C.....6	59.26.0470	47 uF	20%, 6.3 V, Sal	Ph
	C.....7	59.06.5474	470 nF	5%, PETP	
	C.....8	59.05.1681	680 pF	1%, PP	
	C.....9	59.05.1681	680 pF	1%, PP	
	C.....10	59.05.1221	220 pF	1%, PP	
	C.....11	59.05.1102	1 nF	1%, PP	
	C.....12	59.26.0470	47 uF	20%, 6.3 V, Sal	Ph
	C.....13	59.34.2670	47 pF	5%, Cer	
	C.....14	59.05.1681	680 pF	1%, PP	
	C.....15	59.05.1101	100 pF	1%, PP	
	C.....16	59.26.0470	47 uF	20%, 6.3 V, Sal	Ph
	C.....17	59.34.2220	22 pF	5%, Cer	
	C.....18		not used		
	C.....19	59.34.2220	22 pF	5%, Cer	
	C.....20	59.34.4680	68 pF	5%, Cer	
	C.....21	59.26.0470	47 uF	20%, 6.3 V, Sal	Ph
	C.....22	59.26.0470	47 uF	20%, 6.3 V, Sal	Ph
	C.....23	59.26.2100	10 uF	20%, 16 V, Sal	Ph
	C.....24	59.12.7202	2 nF	1%, PS	
	C.....25	59.06.0683	68 nF	20%, PETP	
	C.....26	59.05.1102	1 nF	1%, PP	
	C.....27	59.26.0470	47 uF	20%, 6.3 V, Sal	Ph
	C.....28	59.34.2270	27 pF	5%, Cer	
	C.....29	59.34.2270	27 pF	5%, Cer	
	C.....30	59.05.1332	3.3 nF	1%, PP	
	C.....31	59.06.5103	10 nF	5%, PETP	
	C.....32	59.06.5105	1 uF	5%, PETP	
	C.....33	59.05.1102	1 nF	1%, PP	
	C.....34	59.05.1332	3.3 nF	1%, PP	
	C.....35	59.05.1221	220 pF	1%, PP	

IND.	POS.NO.	PART NO.	VALUE	SPECIFICATIONS / EQUIVALENT	MANUF.
	C.....36	59.05.1102	1 nF	1%, PP	
	C.....37	59.26.0470	47 uF	20%, 6.3 V, Sal	Ph
	C.....38	59.27.3221	220 uF	20%, 10 V, El	
	C.....39	59.05.1102	1 nF	1%, PP	
	C.....40	59.34.2220	22 pF	5%, Cer	
	C.....41	59.05.1472	4.7 nF	1%, PP	
	C.....42	59.26.0470	47 uF	20%, 6.3 V, Sal	Ph
	C.....43	59.26.2100	10 uF	20%, 16 V, Sal	Ph
	C.....44	59.26.5479	4.7 uF	20%, Sal	Ph
	C.....45	59.34.4680	68 pF	5%, Cer	
	C.....46	59.05.1102	1 nF	1%, PP	
	C.....47	59.26.5479	4.7 uF	20%, Sal	Ph
	C.....48	59.06.0683	68 nF	20%, PETP	
	C.....49	59.05.1102	1 nF	1%, PP	
	C.....50	59.05.1102	1 nF	1%, PP	
	C.....51	59.05.1102	1 nF	1%, PP	
	C.....52	59.05.1102	1 nF	1%, PP	
	D.....1	50.04.0125	1N4448		ITT,Phs,Ses,TI
	D.....2	50.04.0125	1N4448		ITT,Phs,Ses,TI
	D.....3	50.04.0125	1N4448		ITT,Phs,Ses,TI
	D.....4	50.04.0512	1N5818	1N5819	Mot
	D.....5	50.04.0127	BAT 42	BAT 85, BAS 40-02	Ph,Sie,Tho-CSF
	D.....6	50.04.0127	BAT 42	BAT 85, BAS 40-02	Ph,Sie,Tho-CSF
	D.....7	50.04.0125	1N4448		ITT,Phs,Ses,TI
	D.....8	50.04.0125	1N4448		ITT,Phs,Ses,TI
	IC....1	50.07.0004	MC14556BCP	CD4556BE, 45568 PC	Mot,RCA,Fc
	IC....2	50.11.0106	SO 214 DE	BSD214	Six,Ph
	IC....3	50.07.0002	AD752KJN	MP7524JN	ADI,MpS
	IC....4	50.04.0101	TL072CP	LF 353 N	NS,TI,Tho
	IC....5	50.04.0105	NE5532N	XR5532N, 5532NB	Sig,Ex,Ra
	IC....6	50.04.0101	TL072CP	LF 353 N	NS,TI,Tho
	IC....7	50.07.0002	AD752KJN	MP7524JN	ADI,MpS
	IC....8	50.04.0101	TL072CP	LF 353 N	NS,TI,Tho
	IC....9	50.04.0106	NE5532AN	XR5532AN, 5532ANB	Sig,Ex,Ra
	IC....10	50.04.0105	NE5532N	XR5532N, 5532NB	Sig,Ex,Ra

IND.	POS.NO.	PART NO.	VALUE	SPECIFICATIONS / EQUIVALENT	MANUF.
	IC....11	50.07.0002	AD7524JN	MP7524JN	ADI,MpS
	IC....12	50.04.0106	NE5532AN	XR5532AN, 5532ANB	Sig,Ex,Ra
	IC....13	50.04.0106	NE5532AN	XR5532AN, 5532ANB	Sig,Ex,Ra
	J.....1	54.01.0387	10 cont.	AMP Nr. 163.683-8	
	K.....1	56.04.0171	SM 01012		ITT
	L.....1	62.01.0128	1 mH	Gowanda 16-104 or Delevan 2307-105	
	L.....2	1.022.214.00		Filter coils 150 kHz	St
	L.....3	62.01.0128	1 mH	Gowanda 16-104 or Delevan 2307-105	
	L.....4	62.01.0128	1 mH	Gowanda 16-104 or Delevan 2307-105	
	P.....1	54.12.0087	7 cont.	AMP Mini Match System, Nr. 164 713-7	
	Q.....1	50.03.0329	P1Z28E	WP146	Six,TS
	Q.....2	50.03.0329	P1Z28E	WP146	Six,TS
	Q.....3	50.03.0175	BC 307	BC 557 B	ITT,Mot,Ph
	R.....1	57.11.4822	8.2 kOhm	5%	
	R.....2	57.11.4104	100 kOhm	5%	
	R.....3	57.11.4105	1 MOhm	5%	
	R.....4	57.11.5106	10 MOhm	10%	
	R.....5	57.11.4181	180 Ohm	5%	
	R.....6	57.11.4223	22 kOhm	5%	
	R.....7	57.11.4104	100 kOhm	5%	
	R.....8	57.11.4102	1 kOhm	5%	
	R.....9	57.11.4105	1 MOhm	10%	
	R.....10	57.11.4182	1.8 kOhm	2%	
	R.....11	57.11.3204	200 kOhm	1%	
	R.....12	57.11.4822	8.2 kOhm	2%	
	R.....13	57.11.3433	43 kOhm	2%	
	R.....14	57.11.4472	4.7 kOhm	5%	
	R.....15	57.11.3622	6.2 kOhm	1%	
	R.....16		not used		
	R.....17	57.11.3123	12 kOhm	1%	
	R.....18	57.11.3203	20 kOhm	1%	

IND.	POS.NO.	PART NO.	VALUE	SPECIFICATIONS / EQUIVALENT	MANUF.
	R.....19	57.11.4103	10 kOhm	2%	
	R.....20	57.11.4101	100 Ohm	2%	
	R.....21	57.11.3752	7.5 kOhm	1%	
	R.....22	57.11.3683	68 kOhm	1%	
	R.....23	57.11.3562	5.6 kOhm	1%	
	R.....24	57.11.5106	10 MOhm	10%	
	R.....25	57.11.5106	10 MOhm	10%	
	R.....26	57.11.4151	150 Ohm	2%	
	R.....27	57.11.3224	220 kOhm	1%	
	R.....28	57.11.4471	470 Ohm	2%	
	R.....29	57.11.4105	1 MOhm	5%	
	R.....30	57.11.4474	470 kOhm	2%	
	R.....31	57.11.3303	30 kOhm	5%	
	R.....32	57.11.3752	7.5 kOhm	1%	
	R.....33	57.11.3391	390 Ohm	1%	
	R.....34	57.11.3911	910 Ohm	1%	
	R.....35	57.11.3132	1.3 kOhm	1%	
	R.....36	57.11.4103	10 kOhm	2%	
	R.....37	57.11.4103	10 kOhm	2%	
	R.....38	57.11.4124	120 kOhm	5%	
	R.....39	57.11.4153	15 kOhm	2%	
	R.....40	57.11.3472	4.7 kOhm	1%	
	R.....41	57.11.3472	4.7 kOhm	1%	
	R.....42	57.11.3472	4.7 kOhm	1%	
	R.....43	57.11.3132	1.3 kOhm	1%	
	R.....44	57.11.4472	4.7 kOhm	5%	
	R.....45	57.11.4124	100 kOhm	2%	
	R.....46	57.11.3272	2.7 kOhm	2%	
	R.....47	57.11.3300	30 Ohm	1%	
	R.....48	57.11.3472	4.7 kOhm	1%	
	R.....49	57.11.4103	10 kOhm	5%	
	R.....50	57.11.4681	680 Ohm	2%	
	R.....51	57.11.3911	910 Ohm	1%	
	R.....52	57.11.4124	100 kOhm	5%	
	R.....53	57.11.3302	3 kOhm	1%	
	R.....54	57.11.4471	470 Ohm	5%	
	R.....55	57.11.3302	3 kOhm	1%	

IND.	POS.NO.	PART NO.	VALUE	SPECIFICATIONS / EQUIVALENT	MANUF.
	R.....56	57.11.4102	1 kOhm	5%	
	R.....57	57.11.4333	33 kOhm	5%	
	R.....58	57.11.4122	1.2 kOhm	5%	
	R.....59	57.11.4101	100 Ohm	5%	
	R.....60	57.11.4104	100 kOhm	5%	
	R.....61	57.11.4104	100 kOhm	5%	
	R.....62	57.11.4393	39 kOhm	2%	
	R.....63	57.11.4101	100 Ohm	5%	
	R.....64	57.11.4101	100 Ohm	5%	
	R.....65	57.11.4472	4.7 kOhm	5%	
	R.....66	57.11.4101	100 Ohm	2%	
	R.....67	57.11.4101	100 Ohm	5%	
	R.....68	57.11.4103	10 kOhm	5%	
	R.....69	57.11.3272	2.7 kOhm	1%	
	R.....70	57.11.3472	4.7 kOhm	1%	
	R.....71	57.11.3272	2.7 kOhm	1%	
	R.....72	57.11.4101	100 Ohm	5%	
	R.....73	57.11.3472	4.7 kOhm	1%	
	T.....1	1.022.213.00		Bias Transformer, 150 kHz	St

Cer=Ceramic, PETP=Polyester, PP=Polypropylen, PS=Polystyrol,
Sal=Solid aluminium

MANUFACTURER: ADI=Analog Devices Inc., Ex=Exar, Fc=Fairchild,
ITT=Internetall, Mot=Motorola,
MpS=Micropower Semiconductors, Ph=Philips, Ra=Raytheon,
RCA=Radio Corp. of America, Ses=Sescosem, Sig=Signetics,
St=Studer, Sie=Siliconix, TS=Teledyne Semiconductors,
TI=Texas Instruments.

ORIG 86/11/20

ADAPTATION BOARD 1.820.741.00

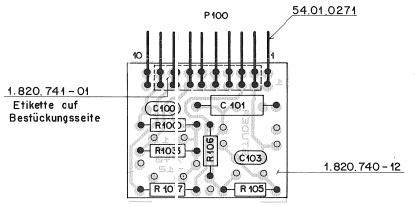

IND.	POS.NO.	PART NO.	VALUE	SPECIFICATIONS / EQUIVALENT	MANUF.
	C..0100	59.06.5682	6.8 nF	5%	
	C..0101	59.04.8221	220 pF	5%	
	C..0102		not used		
	C..0103	59.06.5223	22 nF	5%	
	C..0104		not used		
	C..0105		not used		
	P..0100	54.01.0271	10 cont.	AMP-Nr. 163.740-8	
	R..0100	57.11.4472	4.7 kOhm	2%	
	R..0101		not used		
	R..0102		not used		
	R..0103	57.11.4682	6.8 kOhm	2%	
	R..0104		not used		
	R..0105	57.11.3432	4.3 kOhm	1%	
	R..0106	57.11.3432	4.3 kOhm	1%	
	R..0107	57.11.4102	1.0 kOhm	2%	

ORIG 87/04/13

RECORD AMPLIFIER HX PRO 1.820.811.81

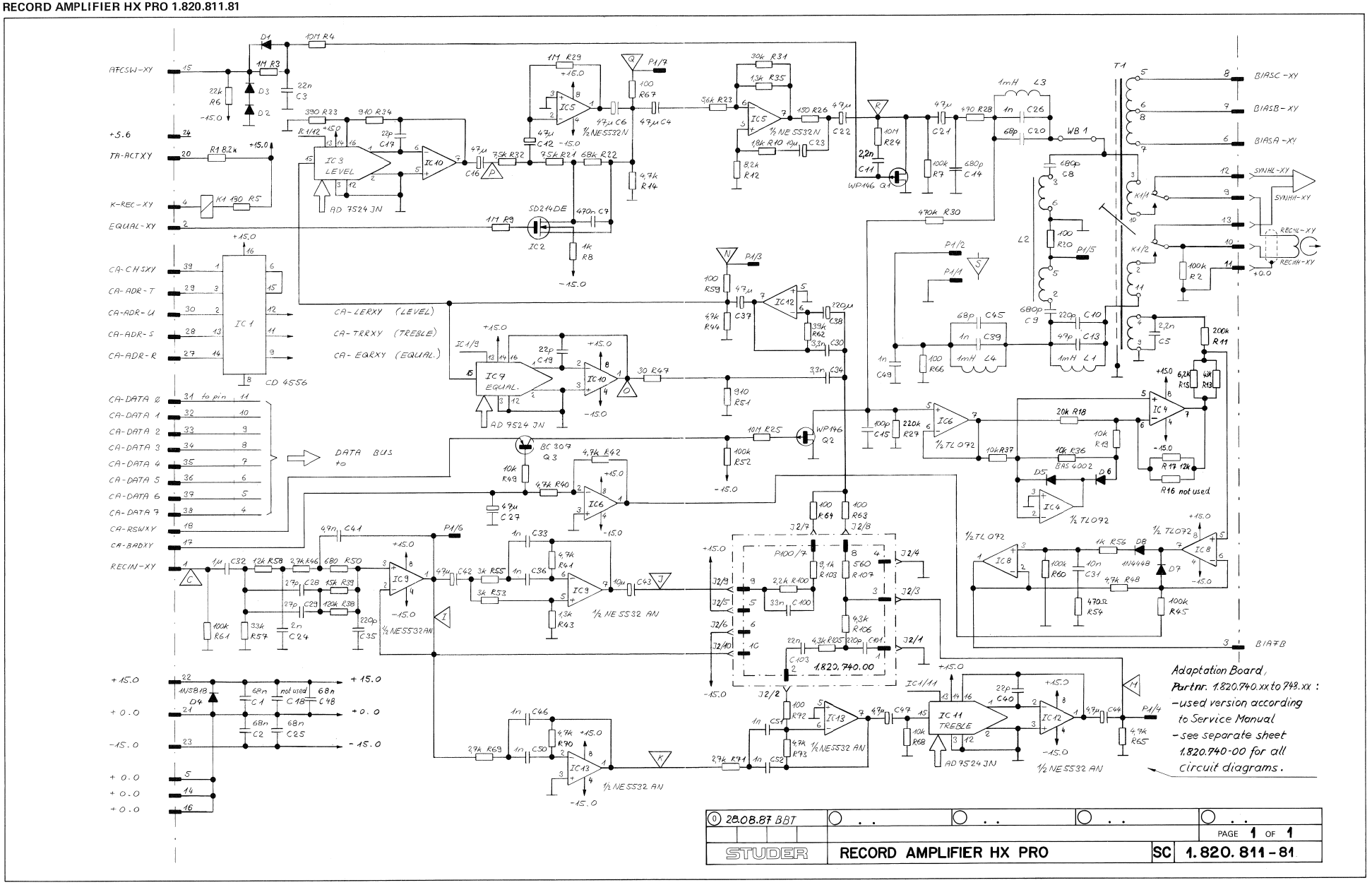

0 28.08.87 BBT					PAGE 1 OF 1
STUDER	RECORD AMPLIFIER HX PRO			SC	1.820.811-81

RECORD AMPLIFIER HX PRO 1.820.811.81

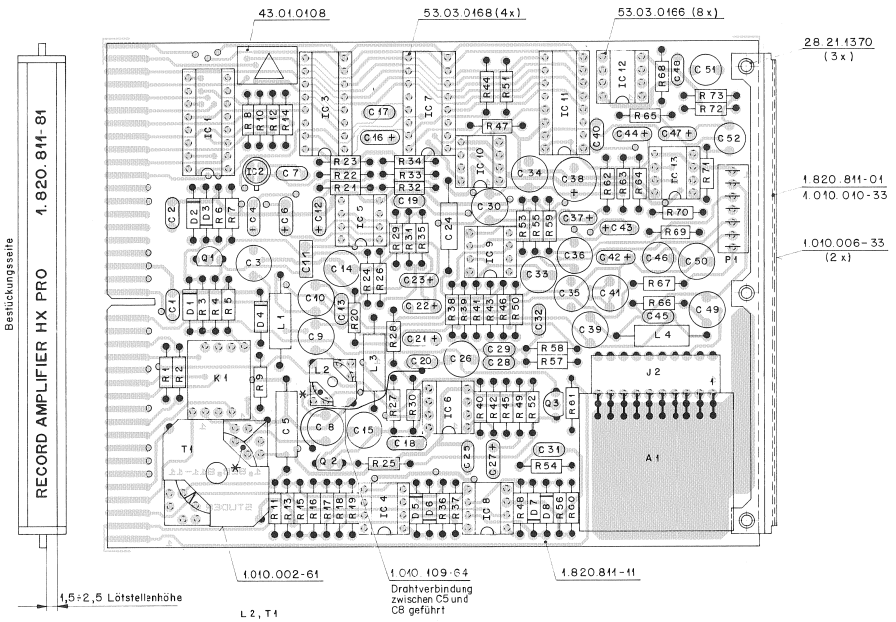

IND.	POS.NO.	PART NO.	VALUE	SPECIFICATIONS / EQUIVALENT	MANUF.
	A.....1		see note 1	Adaptation Board	S
	C.....1	59.06.0683	68 nF	20%, PETP	
	C.....2	59.06.0683	68 nF	20%, PETP	
	C.....3	59.05.1223	22 nF	1%, FP	
	C.....4	59.26.0470	47 uF	20%, 6.3 V, Sal	Ph
	C.....5	59.12.9222	2.2 nF	1%, 500 V, PS	
	C.....6	59.26.0470	47 uF	20%, 6.3 V, Sal	Ph
	C.....7	59.06.5474	470 nF	5%, PETP	
	C.....8	59.05.1681	680 pF	1%, FP	
	C.....9	59.05.1681	680 pF	1%, FP	
	C.....10	59.05.1221	220 pF	1%, FP	
	C.....11	59.06.0222	2.2 nF	10%, PETP	
	C.....12	59.26.0470	47 uF	20%, 6.3 V, Sal	Ph
	C.....13	59.34.2470	47 pF	5%, Cer	
	C.....14	59.05.1681	680 pF	1%, FP	
	C.....15	59.05.1101	100 pF	1%, FP	
	C.....16	59.26.0470	47 uF	20%, 6.3 V, Sal	Ph
	C.....17	59.34.2220	22 pF	5%, Cer	
	C.....18		not used		
	C.....19	59.34.2220	22 pF	5%, Cer	
	C.....20	59.34.4680	68 pF	5%, Cer	
	C.....21	59.26.0470	47 uF	20%, 6.3 V, Sal	Ph
	C.....22	59.26.0470	47 uF	20%, 6.3 V, Sal	Ph
	C.....23	59.26.2100	10 uF	20%, 16 V, Sal	Ph
	C.....24	59.12.7202	2 nF	1%, PS	
	C.....25	59.06.0683	68 nF	20%, PETP	
	C.....26	59.05.1102	1 nF	1%, FP	
	C.....27	59.26.0470	47 uF	20%, 6.3 V, Sal	Ph
	C.....28	59.34.2270	27 pF	5%, Cer	
	C.....29	59.34.2270	27 pF	5%, Cer	
	C.....30	59.05.1332	3.3 nF	1%, FP	
	C.....31	59.06.5103	10 nF	5%, PETP	
	C.....32	59.06.5105	1 uF	5%, PETP	
	C.....33	59.05.1102	1 nF	1%, FP	
	C.....34	59.05.1332	3.3 nF	1%, FP	
	C.....35	59.05.1221	220 pF	1%, FP	

IND.	POS.NO.	PART NO.	VALUE	SPECIFICATIONS / EQUIVALENT	MANUF.
	C.....36	59.05.1102	1 nF	1%, FP	
	C.....37	59.26.0470	47 uF	20%, 6.3 V, Sal	Ph
	C.....38	59.22.3221	220 uF	20%, 10 V, El	
	C.....39	59.05.1102	1 nF	1%, FP	
	C.....40	59.34.2220	22 pF	5%, Cer	
	C.....41	59.05.1472	4.7 nF	1%, FP	
	C.....42	59.26.0470	47 uF	20%, 6.3 V, Sal	Ph
	C.....43	59.26.2100	10 uF	20%, 16 V, Sal	Ph
	C.....44	59.26.5479	4.7 uF	20%, Sal	Ph
	C.....45	59.34.4680	68 pF	5%, Cer	
	C.....46	59.05.1102	1 nF	1%, FP	
	C.....47	59.26.5479	4.7 uF	20%, Sal	Ph
	C.....48	59.06.0683	68 nF	20%, PETP	
	C.....49	59.05.1102	1 nF	1%, FP	
	C.....50	59.05.1102	1 nF	1%, FP	
	C.....51	59.05.1102	1 nF	1%, FP	
	C.....52	59.05.1102	1 nF	1%, FP	
	D.....1	50.04.0125	1N4448		ITT,Ph,Sem,TI
	D.....2	50.04.0125	1N4448		ITT,Ph,Sem,TI
	D.....3	50.04.0125	1N4448		ITT,Ph,Sem,TI
	D.....4	50.04.0512	1N5818	1N5819	Mot
	D.....5	50.04.0127	BAT 42	BAT 85, BAS 40-02	Ph,Sie,Tho-CSF
	D.....6	50.04.0127	BAT 42	BAT 85, BAS 40-02	Ph,Sie,Tho-CSF
	D.....7	50.04.0125	1N4448		ITT,Ph,Sem,TI
	D.....8	50.04.0125	1N4448		ITT,Ph,Sem,TI
	IC....1	50.07.0004	MC14556BCP	CD4556BE, 4556B PC	Mot,RCA,Fc
	IC....2	50.11.0106	SD 214 DE	BS9214	Six,Ph
	IC....3	50.07.0002	AD7524JN	MP7524N	ADI,MpS
	IC....4	50.09.0101	TL072CP	LF 353 N	NS,TI,Tho
	IC....5	50.09.0105	NE5532N	XR5532N, 5532NB	Sig,Ex,Ra
	IC....6	50.09.0101	TL072CP	LF 353 N	NS,TI,Tho
	IC....7	50.07.0002	AD7524JN	MP7524N	ADI,MpS
	IC....8	50.09.0101	TL072CP	LF 353 N	NS,TI,Tho
	IC....9	50.09.0106	NE5532AN	XR5532AN, 5532ANB	Sig,Ex,Ra
	IC....10	50.09.0105	NE5532N	XR5532N, 5532NB	Sig,Ex,Ra

IND.	POS.NO.	PART NO.	VALUE	SPECIFICATIONS / EQUIVALENT	MANUF.
	IC....11	50.07.0002	AD7524JN	MP7524JN	ADI,MpS
	IC....12	50.09.0106	NE5532AN	XR5532AN, 5532ANB	Sig,Ex,Ra
	IC....13	50.09.0106	NE5532AN	XR5532AN, 5532ANB	Sig,Ex,Ra
	J.....1	54.01.0307	10 cont.	AMP Nr. 163.683-8	
	K.....1	56.04.0171	SM D1012		ITT
	L.....1	62.01.0128	1 mH	Gowanda 16-104 or Delevan 2307-105	
	L.....2	1.022.214.00		Filter coil, 150 kHz	St
	L.....3	62.01.0128	1 mH	Gowanda 16-104 or Delevan 2307-105	
	L.....4	62.01.0128	1 mH	Gowanda 16-104 or Delevan 2307-105	
	P.....1	54.12.0007	7 cont.	AMP Mini Match System, Nr. 164 713-7	
	Q.....1	50.03.0329	P122BE	WP146	Six,TS
	Q.....2	50.03.0329	P122BE	WP146	Six,TS
	Q.....3	50.03.0515	BC 307	BC 557 B	ITT,Mot,Ph
	R.....1	57.11.4822	8.2 kOhm	5%	
	R.....2	57.11.4104	100 kOhm	5%	
	R.....3	57.11.4105	1 MOhm	5%	
	R.....4	57.11.5106	10 MOhm	10%	
	R.....5	57.11.4191	180 Ohm	5%	
	R.....6	57.11.4223	22 kOhm	5%	
	R.....7	57.11.4104	100 kOhm	5%	
	R.....8	57.11.4102	1 kOhm	5%	
	R.....9	57.11.4105	1 MOhm	10%	
	R.....10	57.11.4182	1.8 kOhm	2%	
	R.....11	57.11.3204	200 kOhm	1%	
	R.....12	57.11.4822	8.2 kOhm	2%	
	R.....13	57.11.3493	43 kOhm	2%	
	R.....14	57.11.4472	4.7 kOhm	5%	
	R.....15	57.11.3622	6.2 kOhm	1%	
	R.....16		not used		
	R.....17	57.11.3123	12 kOhm	1%	
	R.....18	57.11.3203	20 kOhm	1%	

IND.	POS.NO.	PART NO.	VALUE	SPECIFICATIONS / EQUIVALENT	MANUF.
	R.....19	57.11.4103	10 kOhm	2%	
	R.....20	57.11.4101	100 Ohm	2%	
	R.....21	57.11.3752	7.5 kOhm	1%	
	R.....22	57.11.3683	68 kOhm	1%	
	R.....23	57.11.3562	5.6 kOhm	1%	
	R.....24	57.11.5106	10 MOhm	10%	
	R.....25	57.11.5106	10 MOhm	10%	
	R.....26	57.11.4151	150 Ohm	2%	
	R.....27	57.11.3224	220 kOhm	1%	
	R.....28	57.11.4471	470 Ohm	2%	
	R.....29	57.11.4105	1 MOhm	5%	
	R.....30	57.11.4474	470 kOhm	2%	
	R.....31	57.11.3303	30 kOhm	5%	
	R.....32	57.11.3752	7.5 kOhm	1%	
	R.....33	57.11.3391	390 Ohm	1%	
	R.....34	57.11.3911	910 Ohm	1%	
	R.....35	57.11.3132	1.3 kOhm	1%	
	R.....36	57.11.4103	10 kOhm	2%	
	R.....37	57.11.4103	10 kOhm	2%	
	R.....38	57.11.4124	120 kOhm	5%	
	R.....39	57.11.4133	15 kOhm	2%	
	R.....40	57.11.3472	4.7 kOhm	1%	
	R.....41	57.11.3472	4.7 kOhm	1%	
	R.....42	57.11.3472	4.7 kOhm	1%	
	R.....43	57.11.3132	1.3 kOhm	1%	
	R.....44	57.11.4472	4.7 kOhm	5%	
	R.....45	57.11.4104	100 kOhm	2%	
	R.....46	57.11.3272	2.7 kOhm	2%	
	R.....47	57.11.3300	30 Ohm	1%	
	R.....48	57.11.3472	4.7 kOhm	1%	
	R.....49	57.11.4133	10 kOhm	5%	
	R.....50	57.11.4681	680 Ohm	2%	
	R.....51	57.11.3911	910 Ohm	1%	
	R.....52	57.11.4104	100 kOhm	5%	
	R.....53	57.11.3302	3 kOhm	1%	
	R.....54	57.11.4471	470 Ohm	5%	
	R.....55	57.11.3302	3 kOhm	1%	

IND.	POS.NO.	PART NO.	VALUE	SPECIFICATIONS / EQUIVALENT	MANUF.
	R.....56	57.11.4102	1 kOhm	5%	
	R.....57	57.11.4333	33 kOhm	5%	
	R.....58	57.11.4122	1.2 kOhm	2%	
	R.....59	57.11.4101	100 Ohm	5%	
	R.....60	57.11.4104	100 kOhm	5%	
	R.....61	57.11.4104	100 kOhm	5%	
	R.....62	57.11.4393	39 kOhm	2%	
	R.....63	57.11.4101	100 Ohm	5%	
	R.....64	57.11.4101	100 Ohm	5%	
	R.....65	57.11.4472	4.7 kOhm	5%	
	R.....66	57.11.4101	100 Ohm	2%	
	R.....67	57.11.4101	100 Ohm	5%	
	R.....68	57.11.4123	12 kOhm	5%	
	R.....69	57.11.3272	2.7 kOhm	1%	
	R.....70	57.11.3472	4.7 kOhm	1%	
	R.....71	57.11.3272	2.7 kOhm	1%	
	R.....72	57.11.4101	100 Ohm	5%	
	R.....73	57.11.3472	4.7 kOhm	1%	
	T.....1	1.022.213.00		Bias Transformer, 150 kHz	St

Note 1: Actual use of Adaptation Board (Studer nr. 1.820.740.00 up to 1.820.748.00) according to Service Manual.

Cer=Ceramic, PETP=Polyester, PP=Polypropylen, PS=Polystyrol, Sal=Solid aluminium

MANUFACTURER: ADI=Analog Devices Inc., Ex=Exar, F=Fairchild, ITT=Intermetall, Mot=Motorola, MpS=Micropower Semiconductors, Ph=Philips, Ra=Raytheon, RCA=Radio Corp. of America, Sem=Semicosem, Sig=Signetics, St=Studer, Sie=Siliconix, TS=Teledyne Semiconductors, TI=Texas Instruments.

ORIG 87/08/28

ADAPTATION BOARD 1.820.741.00

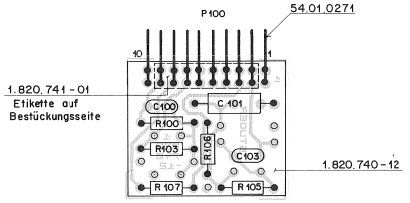

IND.	POS.NO.	PART NO.	VALUE	SPECIFICATIONS / EQUIVALENT	MANUF.
	C..0100	59.06.5682	6.8 nF	5%	
	C..0101	59.04.8221	220 pF	5%	
	C..0102		not used		
	C..0103	59.06.5223	22 nF	5%	
	C..0104		not used		
	C..0105		not used		
	P..0100	54.01.0271	10 cont.	AMP-Nr. 163.740-8	
	R..0100	57.11.4472	4.7 kOhm	2%	
	R..0101		not used		
	R..0102		not used		
	R..0103	57.11.4682	6.8 kOhm	2%	
	R..0104		not used		
	R..0105	57.11.3432	4.3 kOhm	1%	
	R..0106	57.11.3432	4.3 kOhm	1%	
	R..0107	57.11.4102	1.0 kOhm	2%	

ORIG 87/04/13

HF–DRIVER 1.820.813.81

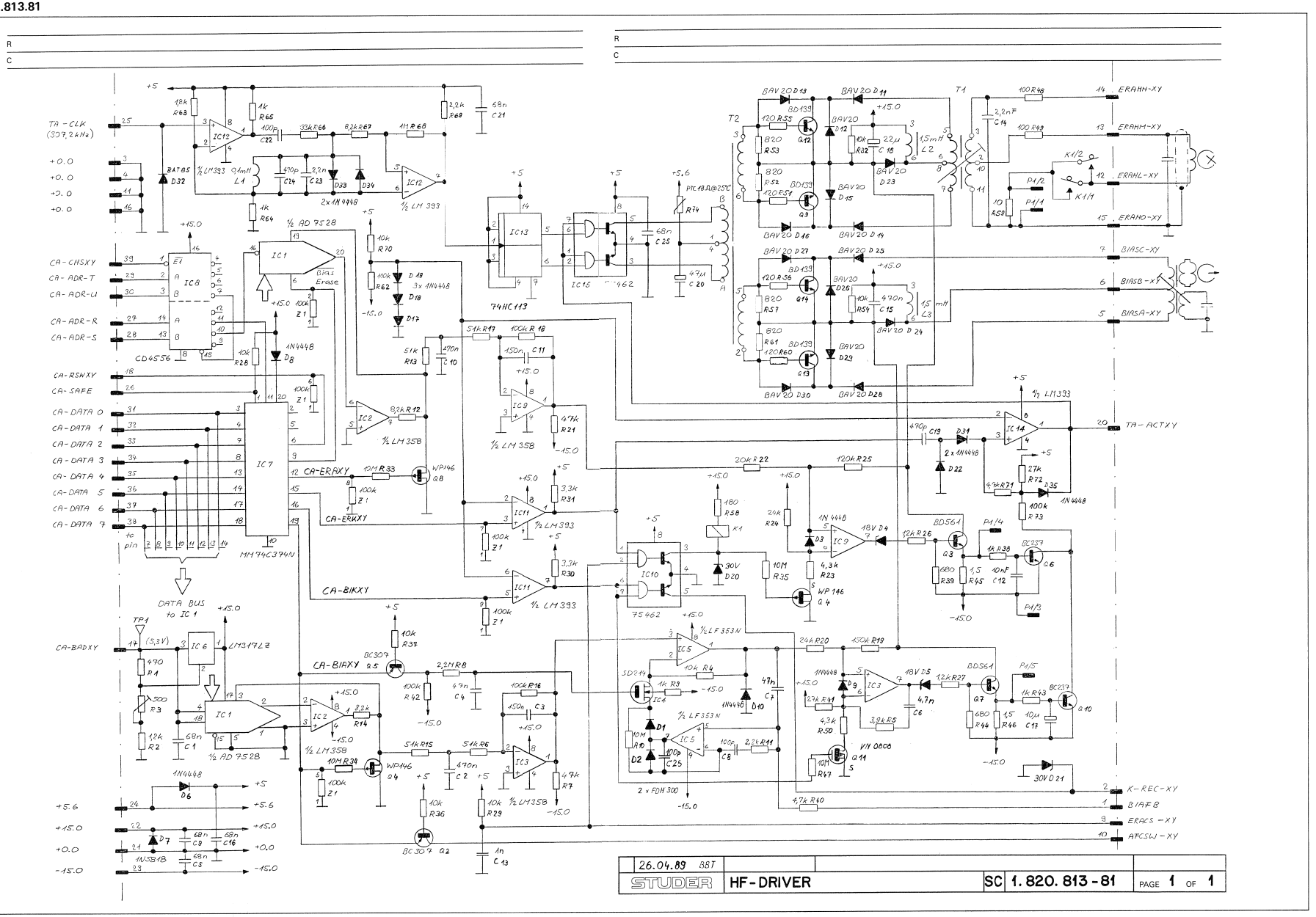

26.04.89 BBT				
STUDER	HF-DRIVER	SC	1.820.813-81	PAGE 1 OF 1

HF–DRIVER 1.820.813.81

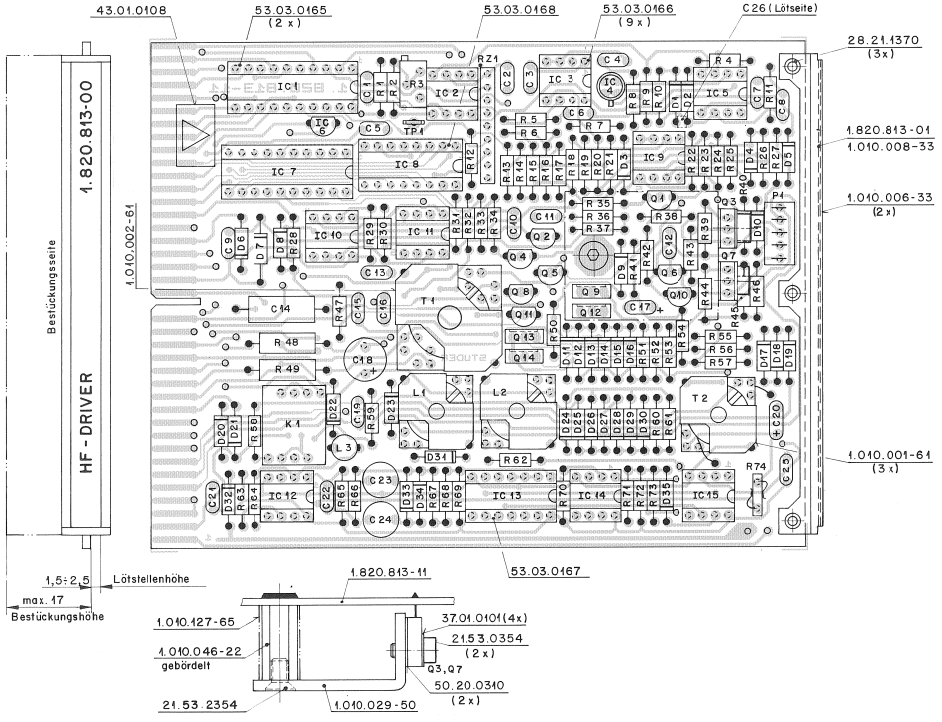

IND.	POS.NO.	PART NO.	VALUE	SPECIFICATIONS / EQUIVALENT	MANUF.
	C.....1	59.04.0683	68 nF	20%, PETP	
	C.....2	59.04.5474	470 nF	5%, PETP	
	C.....3	59.04.5154	150 nF	5%, PETP	
	C.....4	59.04.5473	47 nF	5%, PETP	
	C.....5	59.04.0683	68 nF	20%, PETP	
	C.....6	59.32.2272	4.7 nF	10%, Cer	
	C.....7	59.04.5473	47 nF	5%, PETP	
	C.....8	59.34.4101	100 pF	10%, Cer	
	C.....9	59.04.0683	68 nF	20%, PETP	
	C.....10	59.04.5474	470 nF	5%, PETP	
	C.....11	59.04.5154	150 nF	5%, PETP	
	C.....12	59.04.0103	10 nF	10%, PETP	
	C.....13	59.32.4102	1 nF	20%, Cer	
	C.....14	59.12.9122	2.2 nF	1%, PP	
	C.....15	59.04.5474	470 nF	5%, PETP	
	C.....16	59.04.0683	68 nF	20%, PETP	
	C.....17	59.24.2100	10 uF	20%, 16V, Sal	Ph+Ri
	C.....18	59.24.8220	22 uF	20%, 40V, El	
	C.....19	59.34.5471	470 pF	5%, Cer	
	C.....20	59.24.0470	47 uF	20%, 6.3Vs Sal	Ph+Ri
	C.....21	59.04.0683	68 nF	20%, PETP	
	C.....22	59.34.4101	100 pF	5%, Cer	
	C.....23	59.35.2222	2.2 nF	2.5%, PP	
	C.....24	59.05.1471	470 pF	2.5%, PP	
	C.....25	59.04.0683	68 nF	20%, PETP	
	C.....26	59.60.0101	100 pF	5%, Cer	
	D.....1	50.04.0134	1N3595DHD	FDH300	Fc
	D.....2	50.04.0134	1N3595DHD	FDH300	Fc
	D.....3	50.04.0125	1N4448		Fc+ITT+Ph+Ses+Tf
	D.....4	50.04.1122	18 V Z	BZX55C 18	ITT+Mot+Ph+Tf+Tho
	D.....5	50.04.1122	18 V Z	BZX55C 18	ITT+Mot+Ph+Tf+Tho
	D.....6	50.04.0125	1N4448		Fc+ITT+Ph+Ses+Tf
	D.....7	50.34.0512	1N5818	1n5819	Mot
	D.....8	50.04.0125	1N4448		Fc+ITT+Ph+Ses+Tf
	D.....9	50.04.0125	1N4448		Fc+ITT+Ph+Ses+Tf
	D.....10	50.04.0125	1N4448		Fc+ITT+Ph+Ses+Tf

IND.	POS.NO.	PART NO.	VALUE	SPECIFICATIONS / EQUIVALENT	MANUF.
	D.....11	50.04.0133	BAV20		ITT+Ph
	D.....12	50.04.0133	BAV20		ITT+Ph
	D.....13	50.04.0133	BAV20		ITT+Ph
	D.....14	50.04.0133	BAV20		ITT+Ph
	D.....15	50.04.0133	BAV20		ITT+Ph
	D.....16	50.04.0133	BAV20		ITT+Ph
	D.....17	50.04.0125	1N4448		Fc+ITT+Ph+Ses+Tf
	D.....18	50.04.0125	1N4448		Fc+ITT+Ph+Ses+Tf
	D.....19	50.04.0125	1N4448		Fc+ITT+Ph+Ses+Tf
	D.....20	50.04.1125	10 V Z	BZX55 C 10	ITT+Mot+Ph+Tf+Tho
	D.....21	50.04.1125	10 V Z	BZX55 C 10	ITT+Mot+Ph+Tf+Tho
	D.....22	50.04.0125	1N4448		Fc+ITT+Ph+Ses+Tf
	D.....23	50.04.0133	BAV20		ITT+Ph
	D.....24	50.04.0133	BAV20		ITT+Ph
	D.....25	50.04.0133	BAV20		ITT+Ph
	D.....26	50.04.0133	BAV20		ITT+Ph
	D.....27	50.04.0133	BAV20		ITT+Ph
	D.....28	50.04.0133	BAV20		ITT+Ph
	D.....29	50.04.0133	BAV20		ITT+Ph
	D.....30	50.04.0133	BAV20		ITT+Ph
	D.....31	50.04.0125	1N4448		Fc+ITT+Ph+Ses+Tf
	D.....32	50.04.0127	BAT 42	BAT 85, BAS 40-02	Ph+Ses+Tho
	D.....33	50.04.0125	1N4448		Fc+ITT+Ph+Ses+Tf
	D.....34	50.04.0125	1N4448		Fc+ITT+Ph+Ses+Tf
	D.....35	50.04.0125	1N4448		Fc+ITT+Ph+Ses+Tf
	IC.....1	53.07.0026	ADT528JN	MP 7528 JN	ADI+MPS
	IC.....2	50.35.0286	LM358N	LM358P	Mot+NS+SGS+TI
	IC.....3	50.35.0286	LM358N	LM358P	Mot+NS+SGS+TI
	IC.....4	50.14.0106	SO 214-DE	BSB 214	Ph+Six
	IC.....5	50.09.0101	TL 072 CP	TD8 0353 OP	Tho+TI
	IC.....6	50.10.0108	LM 317 LZ		Mot+NS
	IC.....7	50.07.0003	MMF4C374N		NS
	IC.....8	50.07.0004	CD4556BE	...4556... MC14556BCP	Mot+Ph+RCA+To
	IC.....9	50.35.0286	LM358N	LM358P	Mot+NS+SGS+TI
	IC.....10	50.05.0227	SN75462P	SN75462JG, SN75472P	TI
	IC.....11	50.35.0283	LM 393 N	LM 393 DP, LM 393 P	NS+Tho+TI

IND.	POS.NO.	PART NO.	VALUE	SPECIFICATIONS / EQUIVALENT	MANUF.
	IC.....12	50.35.0283	LM 393 N	LM 393 DP, LM 393 P	NS+Tho+TI
	IC.....13	50.12.1103	F4 HC 113	... 74 HC 113 ...	Mot+NS+Ph+RCA+SGS+TI+To
	IC.....14	50.35.0283	LM 393 N	LM 393 DP, LM 393 P	NS+Tho+TI
	IC.....15	50.35.0227	SN75462P	SN75462JG, SN75472N	TI
	K.....1	56.34.0171	SM D1012		ITT
	L.....1	1.222.197.00	1.5 mH		St
	L.....2	1.222.197.00	1.5 mH		St
	L.....3	52.32.3101	100 uH	TD8 nr. EL 0606 SK1 - 101 K	
	P.....1	54.12.0005	5 cont.	AMP Mini Match System, Nr. 164 713-5AMP	
	Q.....1	50.33.0329	WP146	U zinch-off < 4.0 V	Six
	Q.....2	50.03.0515	BC 251 B	BC 307 B+ BC 557 B	ITT+Mot+Ph
	Q.....3	50.03.0493	BD 561	BD 437	Mot+Ph+Mon
	Q.....4	50.33.0329	WP146	U zinch-off < 4.0 V	Six
	Q.....5	50.03.0515	BC 251 B	BC 307 B+ BC 557 B	ITT+Mot+Ph
	Q.....6	50.03.0436	BC 237 B	BC 550 B+ BC 547 B	ITT+Mot+Ph+Six
	Q.....7	50.03.0493	BD 437	BD 439	Mot+Ph
	Q.....8	50.33.0329	WP146	U zinch-off < 4.0 V	Six
	Q.....9	50.03.0451	BD 139-10	---Hf ---J ---K	Mot+Ph+SGS+Tf+To
	Q.....10	50.03.0436	BC 237 B	BC 550 B+ BC 547 B	ITT+Mot+Ph+Six
	Q.....11	50.03.1505	VN 0808 M	VN 0808 MP8, ZVN 0108 A	Fa+Six
	Q.....12	50.03.0451	BD 139-10	---Hf ---J ---K	Mot+Ph+SGS+Tf+To
	Q.....13	50.03.0451	BD 139-10	---Hf ---J ---K	Mot+Ph+SGS+Tf+To
	Q.....14	50.03.0451	BD 139-10	---Hf ---J ---K	Mot+Ph+SGS+Tf+To
	R.....1	57.11.4471	470 Ohm	2%	
	R.....2	57.11.4122	1.2 kOhm	2%	
	R.....3	58.05.0501	500 Ohm	See Note 1	
	R.....4	57.11.4103	10 kOhm	2%	
	R.....5	57.11.4392	3.9 kOhm	2%	
	R.....6	57.11.4513	51 kOhm	2%	
	R.....7	57.11.4473	47 kOhm	2%	
	R.....8	57.11.5225	2.2 MOhm	10%	
	R.....9	57.11.4102	1 kOhm	10%	

IND.	POS.NO.	PART NO.	VALUE	SPECIFICATIONS / EQUIVALENT	MANUF.
	R.....10	57.11.5106	10 MOhm	10%	
	R.....11	57.11.4222	2.2 kOhm	5%	
	R.....12	57.11.4822	8.2 kOhm	5%	
	R.....13	57.11.3513	51 kOhm	2%	
(00)	R.....14	57.11.4822	8.2 kOhm	5%	
(01)	R.....14	57.11.4182	18 kOhm	5%	
	R.....15	57.11.3513	51 kOhm	2%	
	R.....16	57.11.4104	100 kOhm	5%	
	R.....17	57.11.3513	51 kOhm	2%	
	R.....18	57.11.4104	100 kOhm	5%	
	R.....19	57.11.4154	150 kOhm	5%	
	R.....20	57.11.3243	24 kOhm	2%	
	R.....21	57.11.4473	47 kOhm	5%	
	R.....22	57.11.3203	20 kOhm	2%	
	R.....23	57.11.3432	4.3 kOhm	2%	
	R.....24	57.11.3243	24 kOhm	2%	
	R.....25	57.11.4124	120 kOhm	5%	
	R.....26	57.11.4122	1.2 kOhm	5%	
	R.....27	57.11.4122	1.2 kOhm	5%	
	R.....28	57.11.4103	10 kOhm	5%	
	R.....29	57.11.4133	10 kOhm	5%	
	R.....30	57.11.3332	3.3 kOhm	5%	
	R.....31	57.11.3332	3.3 kOhm	5%	
	R.....32	57.11.4103	10 kOhm	10%	
	R.....33	57.11.5106	10 MOhm	10%	
	R.....34	57.11.5106	10 MOhm	10%	
	R.....35	57.11.5106	10 MOhm	10%	
	R.....36	57.11.4103	10 kOhm	10%	
	R.....37	57.11.4123	12 kOhm	10%	
	R.....38	57.11.4102	1 kOhm	2%	
	R.....39	57.11.4681	680 Ohm	5%	
	R.....40	57.11.4472	4.7 kOhm	2%	
	R.....41	57.11.4273	27 kOhm	2%	
	R.....42	57.11.4104	100 kOhm	10%	
	R.....43	57.11.4102	1 kOhm	2%	
	R.....44	57.11.4681	680 Ohm	2%	
	R.....45	57.11.4159	1.5 Ohm	2%	

IND.	POS.NO.	PART NO.	VALUE	SPECIFICATIONS / EQUIVALENT	MANUF.
	R.....46	57.11.4159	1.5 Ohm	2%	
	R.....47	57.11.5106	10 MOhm	10%	
	R.....48	57.13.4101	100 Ohm	5%, 0.5W	
	R.....49	57.13.4101	100 Ohm	5%, 0.5W	
	R.....50	57.11.3432	4.3 kOhm	2%	
	R.....51	57.11.4121	120 Ohm	5%	
	R.....52	57.11.4821	820 Ohm	5%	
	R.....53	57.11.4821	820 Ohm	5%	
	R.....54	57.11.4103	10 kOhm	10%	
	R.....55	57.11.4121	120 Ohm	5%	
	R.....56	57.11.4121	120 Ohm	5%	
	R.....57	57.11.4821	820 Ohm	5%	
	R.....58	57.11.4181	180 Ohm	5%	
	R.....59	57.11.4100	10 Ohm	5%	
	R.....60	57.11.4121	120 Ohm	5%	
	R.....61	57.11.4821	820 Ohm	5%	
	R.....62	57.11.4104	100 kOhm	5%	
	R.....63	57.11.4182	1.8 kOhm	2%	
	R.....64	57.11.4102	1 kOhm	2%	
	R.....65	57.11.4102	1 kOhm	5%	
	R.....66	57.11.4333	33 kOhm	5%	
	R.....67	57.11.4822	8.2 kOhm	5%	
	R.....68	57.11.4125	1 MOhm	10%	
	R.....69	57.11.4222	2.2 kOhm	5%	
	R.....70	57.11.4103	10 kOhm	5%	
	R.....71	57.11.4472	4.7 kOhm	5%	
	R.....72	57.11.4273	27 kOhm	5%	
	R.....73	57.11.4124	120 kOhm	5%	
	R.....74	57.92.1151	18 Ohm	4 25 Degrees C, Philips nr. 2322 661 11511	
	RZ.....1	57.89.4134		See Note 2	
	T.....1	1.222.212.00		Erase Transformer, 150kHz	St
	T.....2	1.222.211.00		Driver Transformer, 150kHz	St
	TP.....1	54.02.0303		Test-Pin Lupot-Nr. E184 / 8LE	

(01) 87/04/07 Drop-in improvement

Note 1 - Potentiometer, 500 Ohm, 10%:

Bourns nr.	3296 Z - 1 - 501
Contelec nr.	103 XZ 501
Kurasa nr.	PUT 3105 Z - 1 - 501
Spectrol nr.	64 Z 501 T 000

Note 2 - Network, 8 x 100 kOhm, 5%:

Beckmann nr.	L - 09 - 1 - R 100 K
Bourns nr.	4609 X - 101 - 104
Sprague nr.	256 C J 104 X2 P9
Tawa nr.	MAG C 09 X 100 K J
Vitron	F 9 E 100 kOhm 2%

C=Ceramic, El=Electrolytic, PP=Polipropylene, Sal=Solid aluminium

Manufacturer: Adi=Analog Devices Inc., Fc=Fairchild, ITT=Intermetall, Mon=Monatek, Mot=Motorola, MPS=Micropower Semiconductor NS=National Semiconductors, Ph=Philips, RCA=RCA Corporation of America, Rif=Rifa, Ses=Sescosem, SGS=SGS-Ates, Six=Siemens, Sil=Siliconix, St=Studer, Tri=Interitron, Tho=Thomson CSF, TI=Texas Instruments, To=Toshiba

DKIG 86/11/20 (01) 87/04/07 (00) 89/05/22

BLOCK DIAGRAM
REPRODUCE PREAMPLIFIER 8CH 1,820.808

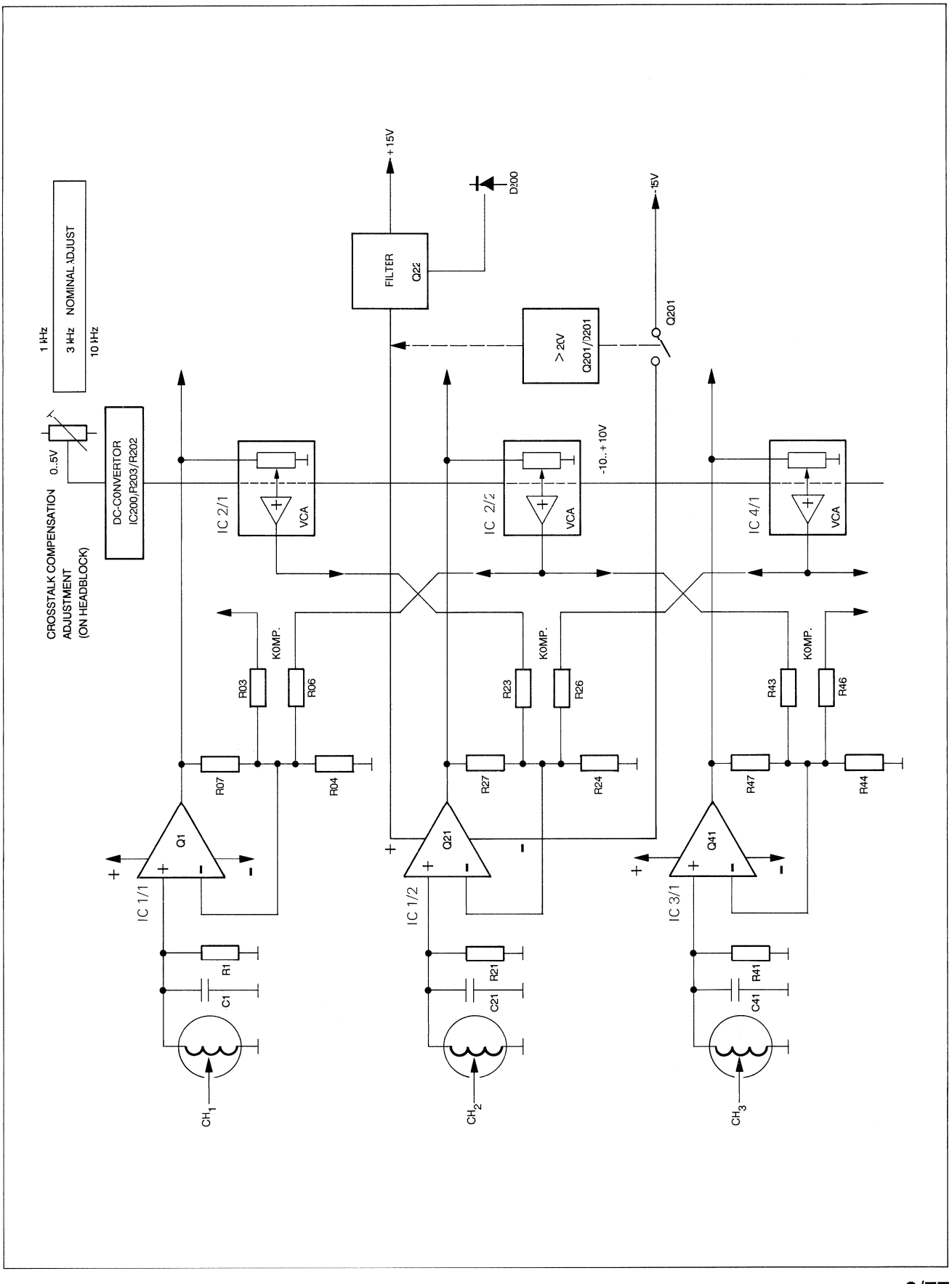

REPRODUCE PREAMPLIFIER 8CH 1.820.808.81

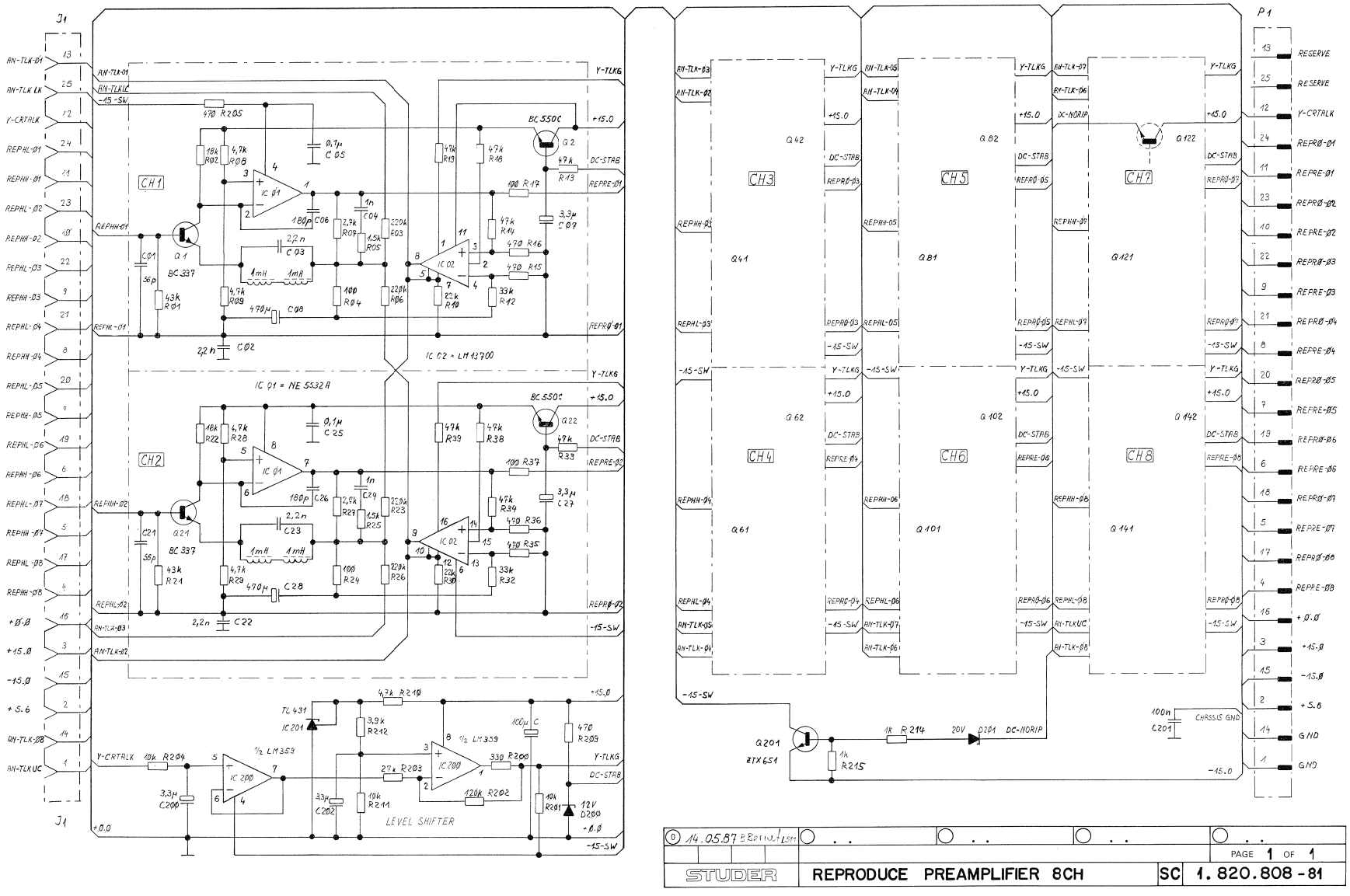

REPRODUCE PREAMPLIFIER 8CH 1.820.808.81

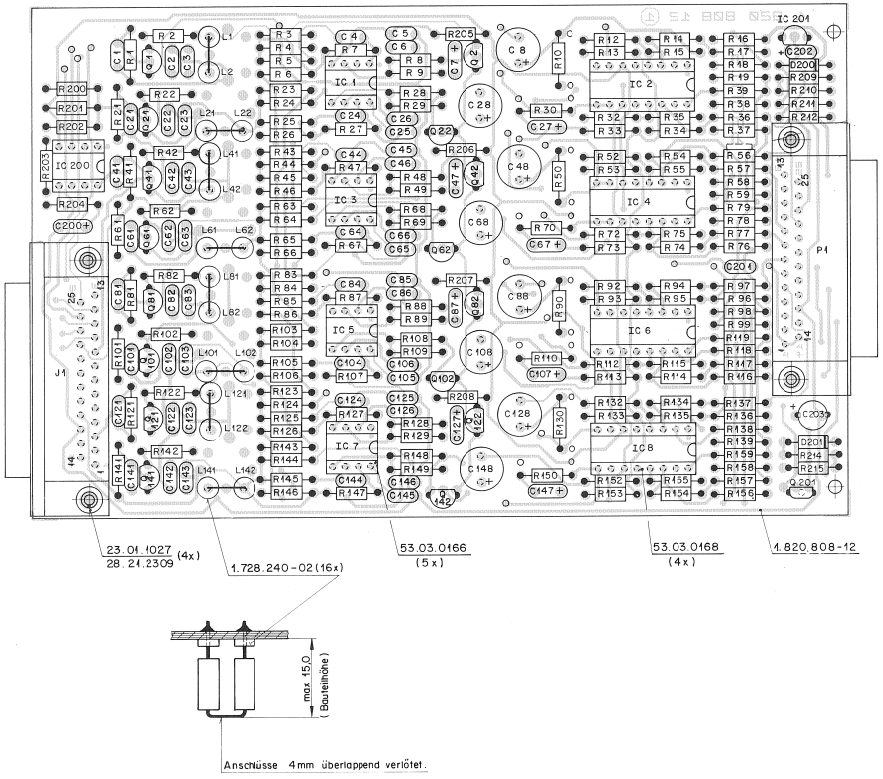

IND.	POS.NO.	PART NO.	VALUE	SPECIFICATIONS / EQUIVALENT	MANUF.
	IC...03	50.09.0136	NE5532AN	XR5532AN	Ex/Sig,Ra
	IC...04	50.09.0112	LM13700N	NE5517N, XR13600CP	Ex/NS/Sig
	IC...05	50.09.0136	NE5532AN	XR5532AN	Ex/Sig,Ra
	IC...06	50.09.0112	LM13700N	NE5517N, XR13600CP	Ex/NS/Sig
	IC...07	50.09.0136	NE5532AN	XR5532AN	Ex/Sig,Ra
	IC...08	50.09.0112	LM13700N	NE5517N, XR13600CP	Ex/NS/Sig
	IC..200	50.09.0177	RC4559NB	UPC 4559	NEC/Ra
	IC..201	50.10.0196	TL431CLP		Mot/TI
	J....01	54.13.0003	25 CONT.	D-TYPE, AMP NR. 164 802-1	
	L....01	62.01.0128	1 mH	10%	Del/Gow
	L....02	62.01.0128	1 mH	10%	Del/Gow
	L....21	62.01.0128	1 mH	10%	Del/Gow
	L....22	62.01.0128	1 mH	10%	Del/Gow
	L....41	62.01.0128	1 mH	10%	Del/Gow
	L....42	62.01.0128	1 mH	10%	Del/Gow
	L....61	62.01.0128	1 mH	10%	Del/Gow
	L....62	62.01.0128	1 mH	10%	Del/Gow
	L....81	62.01.0128	1 mH	10%	Del/Gow
	L....82	62.01.0128	1 mH	10%	Del/Gow
	L....101	62.01.0128	1 mH	10%	Del/Gow
	L....102	62.01.0128	1 mH	10%	Del/Gow
	L....121	62.01.0128	1 mH	10%	Del/Gow
	L....122	62.01.0128	1 mH	10%	Del/Gow
	L....141	62.01.0128	1 mH	10%	Del/Gow
	L....142	62.01.0128	1 mH	10%	Del/Gow
	P....01	54.13.0013	25 cont.	D-Type, AMP NR. 164 494-1	
	Q....01	50.03.0516	BC 337 E		Sie
	Q....02	50.03.0407	BC 550 C	BC 109 C	Ph/Sie
	Q....21	50.03.0516	BC 337 E		Sie
	Q....22	50.03.0407	BC 550 C	BC 109 C	Ph/Sie
	Q....41	50.03.0516	BC 337 E		Sie
	Q....42	50.03.0407	BC 550 C	BC 109 C	Ph/Sie
	Q....61	50.03.0516	BC 337 E		Sie

IND.	POS.NO.	PART NO.	VALUE	SPECIFICATIONS / EQUIVALENT	MANUF.
	Q....62	50.03.0407	BC 550 C	BC 109 C	Ph/Sie
	Q....81	50.03.0516	BC 337 E		Sie
	Q....82	50.03.0407	BC 550 C	BC 109 C	Ph/Sie
	Q....101	50.03.0516	BC 337 E		Sie
	Q....102	50.03.0407	BC 550 C	BC 109 C	Ph/Sie
	Q....121	50.03.0516	BC 337 E		Sie
	Q....122	50.03.0407	BC 550 C	BC 109 C	Ph/Sie
	Q....141	50.03.0516	BC 337 E		Sie
	Q....142	50.03.0407	BC 550 C	BC 109 C	Ph/Sie
	Q....200		not used		
	Q....201	50.03.0523	ZTX 651 S		Fe
	R....01	57.11.3433	43 kOhm	1%	
	R....02	57.11.4183	18 kOhm	2%	
	R....03	57.11.4224	220 kOhm	5%	
	R....04	57.11.3101	100 Ohm	1%	
	R....05	57.11.4152	1.5 kOhm	2%	
	R....06	57.11.4224	220 kOhm	5%	
	R....07	57.11.3272	2.7 kOhm	1%	
	R....08	57.11.4472	4.7 kOhm	2%	
	R....09	57.11.4472	4.7 kOhm	2%	
	R....10	57.11.4223	22 kOhm	2%	
	R....11		not used		
	R....12	57.11.4333	33 kOhm	5%	
	R....13	57.11.4473	47 kOhm	2%	
	R....14	57.11.4473	47 kOhm	2%	
	R....15	57.11.4471	470 Ohm	2%	
	R....16	57.11.4471	470 Ohm	2%	
	R....17	57.11.4101	100 Ohm	2%	
	R....18	57.11.4473	47 kOhm	2%	
	R....19	57.11.4473	47 kOhm	2%	
	R....21	57.11.3433	43 kOhm	1%	
	R....22	57.11.4183	18 kOhm	2%	
	R....23	57.11.4224	220 kOhm	5%	
	R....24	57.11.3101	100 Ohm	1%	
	R....25	57.11.4152	1.5 kOhm	2%	
	R....26	57.11.4224	220 kOhm	5%	

IND.	POS.NO.	PART NO.	VALUE	SPECIFICATIONS / EQUIVALENT	MANUF.
	R....66	57.11.4224	220 kOhm	5%	
	R....67	57.11.3272	2.7 kOhm	1%	
	R....68	57.11.4472	4.7 kOhm	2%	
	R....69	57.11.4472	4.7 kOhm	2%	
	R....70	57.11.4223	22 kOhm	2%	
	R....71		not used		
	R....72	57.11.4333	33 kOhm	5%	
	R....73	57.11.4473	47 kOhm	2%	
	R....74	57.11.4473	47 kOhm	2%	
	R....75	57.11.4471	470 Ohm	2%	
	R....76	57.11.4471	470 Ohm	2%	
	R....77	57.11.4101	100 Ohm	2%	
	R....78	57.11.4473	47 kOhm	2%	
	R....79	57.11.4473	47 kOhm	2%	
	R....81	57.11.3433	43 kOhm	1%	
	R....82	57.11.4183	18 kOhm	2%	
	R....83	57.11.4224	220 kOhm	5%	
	R....84	57.11.3101	100 Ohm	1%	
	R....85	57.11.4152	1.5 kOhm	2%	
	R....86	57.11.4224	220 kOhm	5%	
	R....87	57.11.3272	2.7 kOhm	1%	
	R....88	57.11.4472	4.7 kOhm	2%	
	R....89	57.11.4472	4.7 kOhm	2%	
	R....90	57.11.4223	22 kOhm	2%	
	R....91		not used		
	R....92	57.11.4333	33 kOhm	5%	
	R....93	57.11.4473	47 kOhm	2%	
	R....94	57.11.4473	47 kOhm	2%	
	R....95	57.11.4471	470 Ohm	2%	
	R....96	57.11.4471	470 Ohm	2%	
	R....97	57.11.4101	100 Ohm	2%	
	R....98	57.11.4473	47 kOhm	2%	
	R....99	57.11.4473	47 kOhm	2%	
	R...101	57.11.3433	43 kOhm	1%	
	R...102	57.11.4183	18 kOhm	2%	
	R...103	57.11.4224	220 kOhm	5%	
	R...104	57.11.3101	100 Ohm	1%	
	R...105	57.11.4152	1.5 kOhm	2%	
	R...106	57.11.4224	220 kOhm	5%	
	R...107	57.11.3272	2.7 kOhm	1%	
	R...108	57.11.4472	4.7 kOhm	2%	
	R...109	57.11.4472	4.7 kOhm	2%	
	R...110	57.11.4223	22 kOhm	2%	
	R...111		not used		
	R...112	57.11.4333	33 kOhm	5%	
	R...113	57.11.4473	47 kOhm	2%	
	R...114	57.11.4473	47 kOhm	2%	
	R...115	57.11.4471	470 Ohm	2%	
	R...116	57.11.4471	470 Ohm	2%	
	R...117	57.11.4101	100 Ohm	2%	
	R...118	57.11.4473	47 kOhm	2%	
	R...119	57.11.4473	47 kOhm	2%	
	R...121	57.11.3433	43 kOhm	1%	
	R...122	57.11.4183	18 kOhm	2%	
	R...123	57.11.4224	220 kOhm	5%	
	R...124	57.11.3101	100 Ohm	1%	
	R...125	57.11.4152	1.5 kOhm	2%	
	R...126	57.11.4224	220 kOhm	5%	
	R...127	57.11.3272	2.7 kOhm	1%	
	R...128	57.11.4472	4.7 kOhm	2%	
	R...129	57.11.4472	4.7 kOhm	2%	
	R...130	57.11.4223	22 kOhm	2%	
	R...131		not used		
	R...132	57.11.4333	33 kOhm	5%	
	R...133	57.11.4473	47 kOhm	2%	
	R...134	57.11.4473	47 kOhm	2%	
	R...135	57.11.4471	470 Ohm	2%	
	R...136	57.11.4471	470 Ohm	2%	
	R...137	57.11.4101	100 Ohm	2%	
	R...138	57.11.4473	47 kOhm	2%	
	R...139	57.11.4473	47 kOhm	2%	
	R...141	57.11.3433	43 kOhm	1%	
	R...142	57.11.4183	18 kOhm	2%	
	R...143	57.11.4224	220 kOhm	5%	
	R...144	57.11.3101	100 Ohm	1%	
	R...145	57.11.4152	1.5 kOhm	2%	
	R...146	57.11.4224	220 kOhm	5%	
	R...147	57.11.3272	2.7 kOhm	1%	
	R...148	57.11.4472	4.7 kOhm	2%	
	R...149	57.11.4472	4.7 kOhm	2%	
	R...150	57.11.4223	22 kOhm	2%	
	R...151		not used		
	R...152	57.11.4333	33 kOhm	5%	
	R...153	57.11.4473	47 kOhm	2%	
	R...154	57.11.4473	47 kOhm	2%	
	R...155	57.11.4471	470 Ohm	2%	
	R...156	57.11.4471	470 Ohm	2%	
	R...157	57.11.4101	100 Ohm	2%	
	R...158	57.11.4473	47 kOhm	2%	
	R...159	57.11.4473	47 kOhm	2%	
	R...200	57.11.4331	330 Ohm	5%	
	R...201	57.11.4103	10 kOhm	5%	
	R...202	57.11.4124	120 kOhm	2%	
	R...203	57.11.4273	27 kOhm	2%	
	R...204	57.11.4103	10 kOhm	2%	
	R...205	57.11.4471	470 Ohm	2%	
	R...206	57.11.4471	470 Ohm	2%	
	R...207	57.11.4471	470 Ohm	2%	
	R...208	57.11.4471	470 Ohm	2%	
	R...209	57.11.4471	470 Ohm	2%	
	R...210	57.11.4472	4.7 kOhm	2%	
	R...211	57.11.3103	10 kOhm	1%	
	R...212	57.11.3392	3.9 kOhm	1%	
	R...213		not used		
	R...214	57.11.4102	1 kOhm	2%	
	R...215	57.11.4102	1 kOhm	2%	

IND.	POS.NO.	PART NO.	VALUE	SPECIFICATIONS / EQUIVALENT	MANUF.
	C....01	59.34.4560	56 pF	5%, Cer	
	C....02	59.06.0222	2.2 nF	10%, 63V, PETP	
	C....03	59.06.0222	2.2 nF	10%, 63V, PETP	
	C....04	59.06.0102	1 nF	10%, 63V, PETP	
	C....05	59.06.0104	100 nF	10%, 63V, PETP	
	C....06	59.34.4181	180 pF	5%, Cer	
	C....07	59.26.2339	3.3 uF	20%, 16V, Sal	
	C....08	59.22.3471	470 uF	-20%, 6.3V, El	
	C....21	59.34.4560	56 pF	5%, Cer	
	C....22	59.06.0222	2.2 nF	10%, 63V, PETP	
	C....23	59.06.0222	2.2 nF	10%, 63V, PETP	
	C....24	59.06.0102	1 nF	10%, 63V, PETP	
	C....25	59.06.0104	100 nF	10%, 63V, PETP	
	C....26	59.34.4181	180 pF	5%, Cer	
	C....27	59.26.2339	3.3 uF	20%, 16V, Sal	
	C....28	59.22.3471	470 uF	-20%, 6.3V, El	
	C....41	59.34.4560	56 pF	5%, Cer	
	C....42	59.06.0222	2.2 nF	10%, 63V, PETP	
	C....43	59.06.0222	2.2 nF	10%, 63V, PETP	
	C....44	59.06.0102	1 nF	10%, 63V, PETP	
	C....45	59.06.0104	100 nF	10%, 63V, PETP	
	C....46	59.34.4181	180 pF	5%, Cer	
	C....47	59.26.2339	3.3 uF	20%, 16V, Sal	
	C....48	59.22.3471	470 uF	-20%, 6.3V, El	
	C....61	59.34.4560	56 pF	5%, Cer	
	C....62	59.06.0222	2.2 nF	10%, 63V, PETP	
	C....63	59.06.0222	2.2 nF	10%, 63V, PETP	
	C....64	59.06.0102	1 nF	10%, 63V, PETP	
	C....65	59.06.0104	100 nF	10%, 63V, PETP	
	C....66	59.34.4181	180 pF	5%, Cer	
	C....67	59.26.2339	3.3 uF	20%, 16V, Sal	
	C....68	59.22.3471	470 uF	-20%, 6.3V, El	
	C....81	59.34.4560	56 pF	5%, Cer	
	C....82	59.06.0222	2.2 nF	10%, 63V, PETP	
	C....83	59.06.0222	2.2 nF	10%, 63V, PETP	
	C....84	59.06.0102	1 nF	10%, 63V, PETP	
	C....85	59.06.0104	100 nF	10%, 63V, PETP	

IND.	POS.NO.	PART NO.	VALUE	SPECIFICATIONS / EQUIVALENT	MANUF.
	C....86	59.34.4181	180 pF	5%, Cer	
	C....87	59.26.2339	3.3 uF	20%, 16V, Sal	
	C....88	59.22.3471	470 uF	-20%, 6.3V, El	
	C...101	59.34.4560	56 pF	5%, Cer	
	C...102	59.06.0222	2.2 nF	10%, 63V, PETP	
	C...103	59.06.0222	2.2 nF	10%, 63V, PETP	
	C...104	59.06.0102	1 nF	10%, 63V, PETP	
	C...105	59.06.0104	100 nF	10%, 63V, PETP	
	C...106	59.34.4181	180 pF	5%, Cer	
	C...107	59.26.2339	3.3 uF	20%, 16V, Sal	
	C...108	59.22.3471	470 uF	-20%, 6.3V, El	
	C...121	59.34.4560	56 pF	5%, Cer	
	C...122	59.06.0222	2.2 nF	10%, 63V, PETP	
	C...123	59.06.0222	2.2 nF	10%, 63V, PETP	
	C...124	59.06.0102	1 nF	10%, 63V, PETP	
	C...125	59.06.0104	100 nF	10%, 63V, PETP	
	C...126	59.34.4181	180 pF	5%, Cer	
	C...127	59.26.2339	3.3 uF	20%, 16V, Sal	
	C...128	59.22.3471	470 uF	-20%, 6.3V, El	
	C...141	59.34.4560	56 pF	5%, Cer	
	C...142	59.06.0222	2.2 nF	10%, 63V, PETP	
	C...143	59.06.0222	2.2 nF	10%, 63V, PETP	
	C...144	59.06.0102	1 nF	10%, 63V, PETP	
	C...145	59.06.0104	100 nF	10%, 63V, PETP	
	C...146	59.34.4181	180 pF	5%, Cer	
	C...147	59.26.2339	3.3 uF	20%, 16V, Sal	
	C...148	59.22.3471	470 uF	-20%, 6.3V, El	
	C...200	59.26.2339	3.3 uF	20%, 16V, Sal	
	C...201	59.06.0104	100 nF	10%, 63V, PETP	
	C...202	59.26.2339	3.3 uF	20%, 16V, Sal	
	C...203	59.22.3101	100 uF	20%, 6.3V, El	
	D...200	50.04.1117	12 V Z	BZX 55 C12	ITT/Mot/Ph/Tf/Tho
	D...201	50.04.1109	20 V Z	BZX 55 C20	ITT/Mot/Ph/Tf/Tho
	IC...01	50.09.0106	NE5532AN	XR5532AN	Ex/Sig/Ra
	IC...02	50.09.0112	LM13700N	NE5517N, XR13600CP	Ex/NS/Sig

IND.	POS.NO.	PART NO.	VALUE	SPECIFICATIONS / EQUIVALENT	MANUF.
	R....27	57.11.3272	2.7 kOhm	1%	
	R....28	57.11.4472	4.7 kOhm	2%	
	R....29	57.11.4472	4.7 kOhm	2%	
	R....30	57.11.4223	22 kOhm	2%	
	R....31		not used		
	R....32	57.11.4333	33 kOhm	5%	
	R....33	57.11.4473	47 kOhm	2%	
	R....34	57.11.4473	47 kOhm	2%	
	R....35	57.11.4471	470 Ohm	2%	
	R....36	57.11.4471	470 Ohm	2%	
	R....37	57.11.4101	100 Ohm	2%	
	R....38	57.11.4473	47 kOhm	2%	
	R....39	57.11.4473	47 kOhm	2%	
	R....41	57.11.3433	43 kOhm	1%	
	R....42	57.11.4183	18 kOhm	2%	
	R....43	57.11.4224	220 kOhm	5%	
	R....44	57.11.3101	100 Ohm	1%	
	R....45	57.11.4152	1.5 kOhm	2%	
	R....46	57.11.4224	220 kOhm	5%	
	R....47	57.11.3272	2.7 kOhm	1%	
	R....48	57.11.4472	4.7 kOhm	2%	
	R....49	57.11.4472	4.7 kOhm	2%	
	R....50	57.11.4223	22 kOhm	2%	
	R....51		not used		
	R....52	57.11.4333	33 kOhm	5%	
	R....53	57.11.4473	47 kOhm	2%	
	R....54	57.11.4473	47 kOhm	2%	
	R....55	57.11.4471	470 Ohm	2%	
	R....56	57.11.4471	470 Ohm	2%	
	R....57	57.11.4101	100 Ohm	2%	
	R....58	57.11.4473	47 kOhm	2%	
	R....59	57.11.4473	47 kOhm	2%	
	R....61	57.11.3433	43 kOhm	1%	
	R....62	57.11.4183	18 kOhm	2%	
	R....63	57.11.4224	220 kOhm	5%	
	R....64	57.11.3101	100 Ohm	1%	
	R....65	57.11.4152	1.5 kOhm	2%	

Cer=Ceramic, El=Electrolytic, Sal=Solid aluminium, PETP=Polyesterfilm.

MANUFACTURER: Del=Delevan, Ew=Ewar, Fe=Ferranti, Gow=Gowanda, ITT=Internetall, Mot=Motorola, NEC=Nippon Electric Corp., NS=National Semiconductors, Ph=Philips, Ra=Raytheon, Si=Siemens, Sig=Signetics, Tf=Telefunken, Tho=Thomson-CSF, TI=Texas Instruments.

ORIG 87/05/14

REPRODUCE PREAMPLIFIER 8CH 1.820.808.82

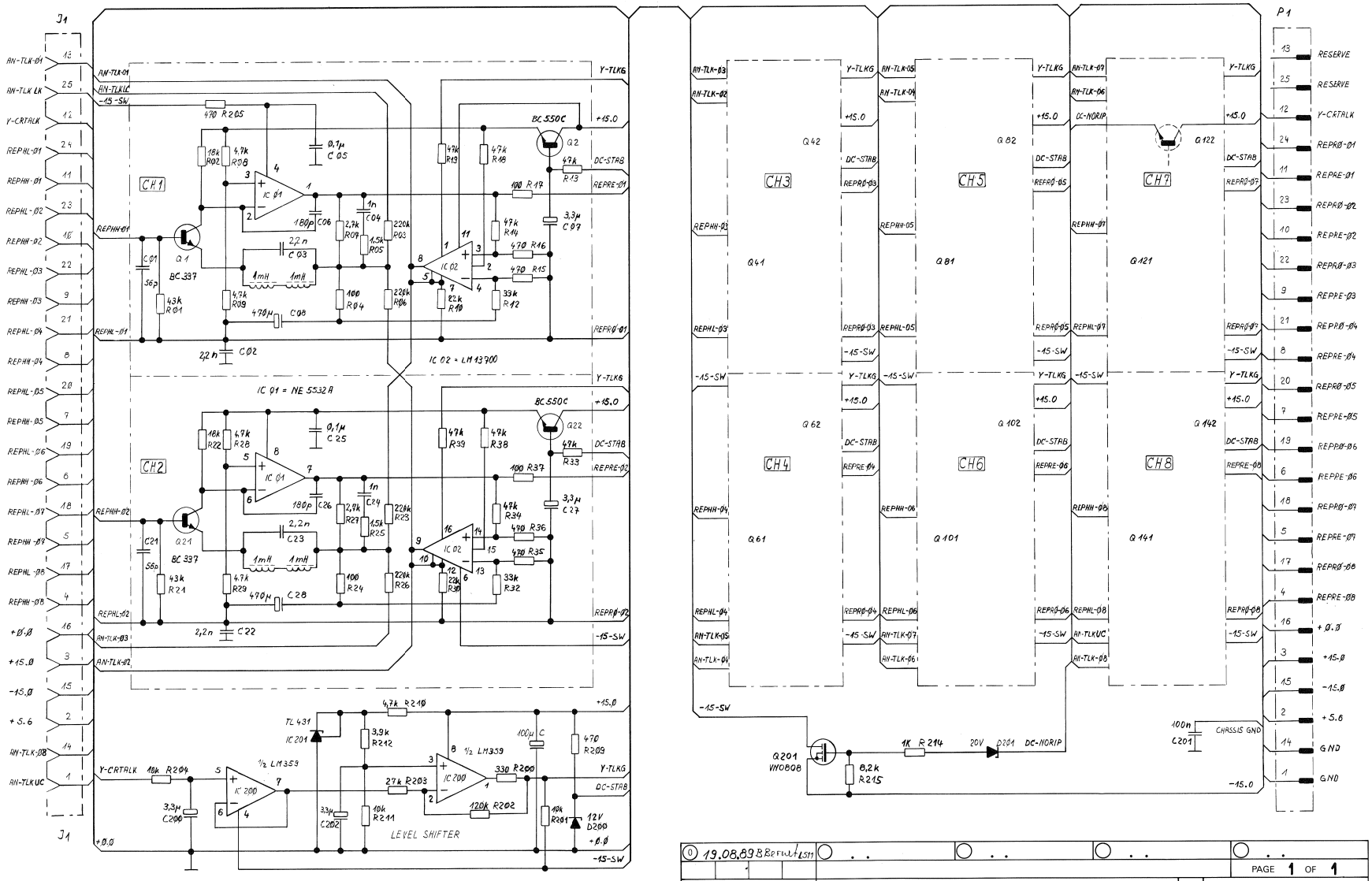

0 19.08.89 BB PRINT LS11				PAGE 1 OF 1	
STUDER	REPRODUCE PREAMPLIFIER 8CH			SC	1.820.808-82

REPRODUCE PREAMPLIFIER 8CH 1.820.808.82

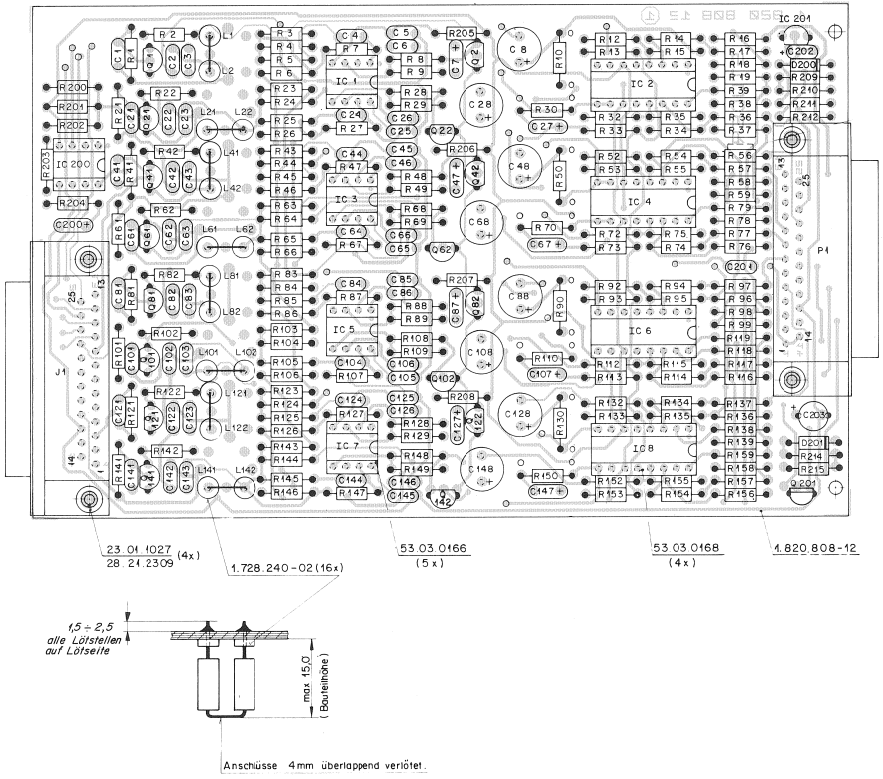

IND.	POS.NO.	PART NO.	VALUE	SPECIFICATIONS / EQUIVALENT	MANUF.
	IC...03	50.09.0196	NE5532AN	XR5532AN	Ex/Sig,Ra
	IC...04	50.09.0112	LM1370ON	NE5517N, XR13600CP	Ex/NS,Sig
	IC...05	50.09.0136	NE5532AN	XR5532AN	Ex/Sig,Ra
	IC...06	50.09.0112	LM1370ON	NE5517N, XR13600CP	Ex/NS,Sig
	IC...07	50.09.0136	NE5532AN	XR5532AN	Ex/Sig,Ra
	IC...08	50.09.0112	LM1370ON	NE5517N, XR13600CP	Ex/NS,Sig
	IC..200	50.09.0127	RC4559WB	UPC 4559	NEC,Ra
	IC..201	50.10.0196	TL431CLP		Mot,TI
	J....01	54.13.0033	25 CONT.	D-TYPE, AMP NR. 164 802-1	
	L....01	62.01.0128	1 mH	10%	Del/Gow
	L....02	62.01.0128	1 mH	10%	Del/Gow
	L....21	62.01.0128	1 mH	10%	Del/Gow
	L....22	62.01.0128	1 mH	10%	Del/Gow
	L....41	62.01.0128	1 mH	10%	Del/Gow
	L....42	62.01.0128	1 mH	10%	Del/Gow
	L....61	62.01.0128	1 mH	10%	Del/Gow
	L....62	62.01.0128	1 mH	10%	Del/Gow
	L....81	62.01.0128	1 mH	10%	Del/Gow
	L....82	62.01.0128	1 mH	10%	Del/Gow
	L...101	62.01.0128	1 mH	10%	Del/Gow
	L...102	62.01.0128	1 mH	10%	Del/Gow
	L...121	62.01.0128	1 mH	10%	Del/Gow
	L...122	62.01.0128	1 mH	10%	Del/Gow
	L...141	62.01.0128	1 mH	10%	Del/Gow
	L...142	62.01.0128	1 mH	10%	Del/Gow
	P....01	54.13.0013	25 cont.	D-Type, AMP NR. 164 494-1	
	Q....01	50.03.0516	BC 337 E		Sie
	Q....02	50.03.0437	BC 550 C	BC 109 C	Ph/Sie
	Q....21	50.03.0516	BC 337 E		Sie
	Q....22	50.03.0427	BC 550 C	BC 109 C	Ph/Sie
	Q....41	50.03.0516	BC 337 E		Sie
	Q....42	50.03.0427	BC 550 C	BC 109 C	Ph/Sie
	Q....61	50.03.0516	BC 337 E		Sie

IND.	POS.NO.	PART NO.	VALUE	SPECIFICATIONS / EQUIVALENT	MANUF.
	Q....62	50.03.0427	BC 550 C	BC 109 C	Ph/Sie
	Q....81	50.03.0516	BC 337 E		Sie
	Q....82	50.03.0427	BC 550 C	BC 109 C	Ph/Sie
	Q...101	50.03.0516	BC 337 E		Sie
	Q...102	50.03.0427	BC 550 C	BC 109 C	Ph/Sie
	Q...121	50.03.0516	BC 337 E		Sie
	Q...122	50.03.0427	BC 550 C	BC 109 C	Ph/Sie
	Q...141	50.03.0516	BC 337 E		Sie
	Q...142	50.03.0407	BC 550 C	BC 109 C	Ph/Sie
	Q...200		not used		
	Q...201	50.03.1505	VN 0808		Six,Fe
	R....01	57.11.3433	43 kOhm	1%	
	R....02	57.11.3183	18 kOhm	2%	
	R....03	57.11.3224	220 kOhm	5%	
	R....04	57.11.3101	100 Ohm	1%	
	R....05	57.11.3152	1.5 kOhm	2%	
	R....06	57.11.3224	220 kOhm	5%	
	R....07	57.11.3272	2.7 kOhm	1%	
	R....08	57.11.3472	4.7 kOhm	2%	
	R....09	57.11.3472	4.7 kOhm	2%	
	R....10	57.11.3223	22 kOhm	2%	
	R....11		not used		
	R....12	57.11.3333	33 kOhm	5%	
	R....13	57.11.3473	47 kOhm	2%	
	R....14	57.11.3473	47 kOhm	2%	
	R....15	57.11.3471	470 Ohm	2%	
	R....16	57.11.3471	470 Ohm	2%	
	R....17	57.11.3101	100 Ohm	2%	
	R....18	57.11.3473	47 kOhm	2%	
	R....19	57.11.3473	47 kOhm	2%	
	R....21	57.11.3433	43 kOhm	1%	
	R....22	57.11.3183	18 kOhm	2%	
	R....23	57.11.3224	220 kOhm	5%	
	R....24	57.11.3101	100 Ohm	1%	
	R....25	57.11.3152	1.5 kOhm	2%	
	R....26	57.11.3224	220 kOhm	5%	

IND.	POS.NO.	PART NO.	VALUE	SPECIFICATIONS / EQUIVALENT	MANUF.
	C....01	59.34.4560	56 pF	5%, Cer	
	C....02	59.06.0222	2.2 nF	10%, 63V, PETP	
	C....03	59.06.0222	2.2 nF	10%, 63V, PETP	
	C....04	59.06.0102	1 nF	10%, 63V, PETP	
	C....05	59.06.0104	100 nF	10%, 63V, PETP	
	C....06	59.34.4181	180 pF	5%, Cer	
	C....07	59.26.2100	10 uF	20%, 16V, Sal	
	C....08	59.22.3471	470 uF	-20%, 6.3V, El	
	C....21	59.34.4560	56 pF	5%, Cer	
	C....22	59.06.0222	2.2 nF	10%, 63V, PETP	
	C....23	59.06.0222	2.2 nF	10%, 63V, PETP	
	C....24	59.06.0102	1 nF	10%, 63V, PETP	
	C....25	59.06.0104	100 nF	10%, 63V, PETP	
	C....26	59.34.4181	180 pF	5%, Cer	
	C....27	59.26.2100	10 uF	20%, 16V, Sal	
	C....28	59.22.3471	470 uF	-20%, 6.3V, El	
	C....41	59.34.4560	56 pF	5%, Cer	
	C....42	59.06.0222	2.2 nF	10%, 63V, PETP	
	C....43	59.06.0222	2.2 nF	10%, 63V, PETP	
	C....44	59.06.0102	1 nF	10%, 63V, PETP	
	C....45	59.06.0104	100 nF	10%, 63V, PETP	
	C....46	59.34.4181	180 pF	5%, Cer	
	C....47	59.26.2100	10 uF	20%, 16V, Sal	
	C....48	59.22.3471	470 uF	-20%, 6.3V, El	
	C....61	59.34.4560	56 pF	5%, Cer	
	C....62	59.06.0222	2.2 nF	10%, 63V, PETP	
	C....63	59.06.0222	2.2 nF	10%, 63V, PETP	
	C....64	59.06.0102	1 nF	10%, 63V, PETP	
	C....65	59.06.0104	100 nF	10%, 63V, PETP	
	C....66	59.34.4181	180 pF	5%, Cer	
	C....67	59.26.2100	10 uF	20%, 16V, Sal	
	C....68	59.22.3471	470 uF	-20%, 6.3V, El	
	C....81	59.34.4560	56 pF	5%, Cer	
	C....82	59.06.0222	2.2 nF	10%, 63V, PETP	
	C....83	59.06.0222	2.2 nF	10%, 63V, PETP	
	C....84	59.06.0102	1 nF	10%, 63V, PETP	
	C....85	59.06.0104	100 nF	10%, 63V, PETP	

IND.	POS.NO.	PART NO.	VALUE	SPECIFICATIONS / EQUIVALENT	MANUF.
	C....86	59.34.4181	180 pF	5%, Cer	
	C....87	59.26.2100	10 uF	20%, 16V, Sal	
	C....88	59.22.3471	470 uF	-20%, 6.3V, El	
	C...101	59.34.4560	56 pF	5%, Cer	
	C...102	59.06.0222	2.2 nF	10%, 63V, PETP	
	C...103	59.06.0222	2.2 nF	10%, 63V, PETP	
	C...104	59.06.0102	1 nF	10%, 63V, PETP	
	C...105	59.06.0104	100 nF	10%, 63V, PETP	
	C...106	59.34.4181	180 pF	5%, Cer	
	C...107	59.26.2100	10 uF	20%, 16V, Sal	
	C...108	59.22.3471	470 uF	-20%, 6.3V, El	
	C...121	59.34.4560	56 pF	5%, Cer	
	C...122	59.06.0222	2.2 nF	10%, 63V, PETP	
	C...123	59.06.0222	2.2 nF	10%, 63V, PETP	
	C...124	59.06.0102	1 nF	10%, 63V, PETP	
	C...125	59.06.0104	100 nF	10%, 63V, PETP	
	C...126	59.34.4181	180 pF	5%, Cer	
	C...127	59.26.2100	10 uF	20%, 16V, Sal	
	C...128	59.22.3471	470 uF	-20%, 6.3V, El	
	C...141	59.34.4560	56 pF	5%, Cer	
	C...142	59.06.0222	2.2 nF	10%, 63V, PETP	
	C...143	59.06.0222	2.2 nF	10%, 63V, PETP	
	C...144	59.06.0102	1 nF	10%, 63V, PETP	
	C...145	59.06.0104	100 nF	10%, 63V, PETP	
	C...146	59.34.4181	180 pF	5%, Cer	
	C...147	59.26.2100	10 uF	20%, 16V, Sal	
	C...148	59.22.3471	470 uF	-20%, 6.3V, El	
	C...200	59.26.2339	3.3 uF	20%, 16V, Sal	
	C...201	59.06.0104	100 nF	10%, 63V, PETP	
	C...202	59.26.2339	3.3 uF	20%, 16V, Sal	
	C...203	59.22.3101	100 uF	20%, 6.3V, El	
	D...200	50.04.1117	12 V Z	BZX 55 C12	ITT,Mot,Ph,Tf,Tho
	D...201	50.04.1109	20 V Z	BZX 55 C20	ITT,Mot,Ph,Tf,Tho
	IC...01	50.09.0106	NE5532AN	XR5532AN	Ex/Sig,Ra
	IC...02	50.09.0112	LM1370ON	NE5517N, XR13600CP	Ex/NS,Sig

IND.	POS.NO.	PART NO.	VALUE	SPECIFICATIONS / EQUIVALENT	MANUF.
	R....27	57.11.3272	2.7 kOhm	1%	
	R....28	57.11.3472	4.7 kOhm	2%	
	R....29	57.11.3472	4.7 kOhm	2%	
	R....30	57.11.3223	22 kOhm	2%	
	R....31		not used		
	R....32	57.11.3333	33 kOhm	5%	
	R....33	57.11.3473	47 kOhm	2%	
	R....34	57.11.3473	47 kOhm	2%	
	R....35	57.11.3471	470 Ohm	2%	
	R....36	57.11.3471	470 Ohm	2%	
	R....37	57.11.3101	100 Ohm	2%	
	R....38	57.11.3473	47 kOhm	2%	
	R....39	57.11.3473	47 kOhm	2%	
	R....41	57.11.3433	43 kOhm	1%	
	R....42	57.11.3183	18 kOhm	2%	
	R....43	57.11.3224	220 kOhm	5%	
	R....44	57.11.3101	100 Ohm	1%	
	R....45	57.11.3152	1.5 kOhm	2%	
	R....46	57.11.3224	220 kOhm	5%	
	R....47	57.11.3272	2.7 kOhm	1%	
	R....48	57.11.3472	4.7 kOhm	2%	
	R....49	57.11.3472	4.7 kOhm	2%	
	R....50	57.11.3223	22 kOhm	2%	
	R....51		not used		
	R....52	57.11.3333	33 kOhm	5%	
	R....53	57.11.3473	47 kOhm	2%	
	R....54	57.11.3473	47 kOhm	2%	
	R....55	57.11.3471	470 Ohm	2%	
	R....56	57.11.3471	470 Ohm	2%	
	R....57	57.11.3101	100 Ohm	2%	
	R....58	57.11.3473	47 kOhm	2%	
	R....59	57.11.3473	47 kOhm	2%	
	R....61	57.11.3433	43 kOhm	1%	
	R....62	57.11.3183	18 kOhm	2%	
	R....63	57.11.3224	220 kOhm	5%	
	R....64	57.11.3101	100 Ohm	1%	
	R....65	57.11.3152	1.5 kOhm	2%	

IND.	POS.NO.	PART NO.	VALUE	SPECIFICATIONS / EQUIVALENT	MANUF.
	R....66	57.11.3224	220 kOhm	5%	
	R....67	57.11.3272	2.7 kOhm	1%	
	R....68	57.11.3472	4.7 kOhm	2%	
	R....69	57.11.3472	4.7 kOhm	2%	
	R....70	57.11.3223	22 kOhm	2%	
	R....71		not used		
	R....72	57.11.3333	33 kOhm	5%	
	R....73	57.11.3473	47 kOhm	2%	
	R....74	57.11.3473	47 kOhm	2%	
	R....75	57.11.3471	470 Ohm	2%	
	R....76	57.11.3471	470 Ohm	2%	
	R....77	57.11.3101	100 Ohm	2%	
	R....78	57.11.3473	47 kOhm	2%	
	R....79	57.11.3473	47 kOhm	2%	
	R....81	57.11.3433	43 kOhm	1%	
	R....82	57.11.3183	18 kOhm	2%	
	R....83	57.11.3224	220 kOhm	5%	
	R....84	57.11.3101	100 Ohm	1%	
	R....85	57.11.3152	1.5 kOhm	2%	
	R....86	57.11.3224	220 kOhm	5%	
	R....87	57.11.3272	2.7 kOhm	1%	
	R....88	57.11.3472	4.7 kOhm	2%	
	R....89	57.11.3472	4.7 kOhm	2%	
	R....90	57.11.3223	22 kOhm	2%	
	R....91		not used		
	R....92	57.11.3333	33 kOhm	5%	
	R....93	57.11.3473	47 kOhm	2%	
	R....94	57.11.3473	47 kOhm	2%	
	R....95	57.11.3471	470 Ohm	2%	
	R....96	57.11.3471	470 Ohm	2%	
	R....97	57.11.3101	100 Ohm	2%	
	R....98	57.11.3473	47 kOhm	2%	
	R....99	57.11.3473	47 kOhm	2%	
	R...101	57.11.3433	43 kOhm	1%	
	R...102	57.11.3183	18 kOhm	2%	
	R...103	57.11.3224	220 kOhm	5%	
	R...104	57.11.3101	100 Ohm	1%	
	R...105	57.11.3152	1.5 kOhm	2%	
	R...106	57.11.3224	220 kOhm	5%	
	R...107	57.11.3272	2.7 kOhm	1%	
	R...108	57.11.3472	4.7 kOhm	2%	
	R...109	57.11.3472	4.7 kOhm	2%	
	R...110	57.11.3223	22 kOhm	2%	
	R...111		not used		
	R...112	57.11.3333	33 kOhm	5%	
	R...113	57.11.3473	47 kOhm	2%	
	R...114	57.11.3473	47 kOhm	2%	
	R...115	57.11.3471	470 Ohm	2%	
	R...116	57.11.3471	470 Ohm	2%	
	R...117	57.11.3101	100 Ohm	2%	
	R...118	57.11.3473	47 kOhm	2%	
	R...119	57.11.3473	47 kOhm	2%	
	R...121	57.11.3433	43 kOhm	1%	
	R...122	57.11.3183	18 kOhm	2%	
	R...123	57.11.3224	220 kOhm	5%	
	R...124	57.11.3101	100 Ohm	1%	
	R...125	57.11.3152	1.5 kOhm	2%	
	R...126	57.11.3224	220 kOhm	5%	
	R...127	57.11.3272	2.7 kOhm	1%	
	R...128	57.11.3472	4.7 kOhm	2%	
	R...129	57.11.3472	4.7 kOhm	2%	
	R...130	57.11.3223	22 kOhm	2%	
	R...131		not used		
	R...132	57.11.3333	33 kOhm	5%	
	R...133	57.11.3473	47 kOhm	2%	
	R...134	57.11.3473	47 kOhm	2%	
	R...135	57.11.3471	470 Ohm	2%	
	R...136	57.11.3471	470 Ohm	2%	
	R...137	57.11.3101	100 Ohm	2%	
	R...138	57.11.3473	47 kOhm	2%	
	R...139	57.11.3473	47 kOhm	2%	
	R...141	57.11.3433	43 kOhm	1%	
	R...142	57.11.3183	18 kOhm	2%	
	R...143	57.11.3224	220 kOhm	5%	
	R...144	57.11.3101	100 Ohm	1%	
	R...145	57.11.3152	1.5 kOhm	2%	
	R...146	57.11.3224	220 kOhm	5%	
	R...147	57.11.3272	2.7 kOhm	1%	
	R...148	57.11.3472	4.7 kOhm	2%	
	R...149	57.11.3472	4.7 kOhm	2%	
	R...150	57.11.3223	22 kOhm	2%	
	R...151		not used		
	R...152	57.11.3333	33 kOhm	5%	
	R...153	57.11.3473	47 kOhm	2%	
	R...154	57.11.3473	47 kOhm	2%	
	R...155	57.11.3471	470 Ohm	2%	
	R...156	57.11.3471	470 Ohm	2%	
	R...157	57.11.3101	100 Ohm	2%	
	R...158	57.11.3473	47 kOhm	2%	
	R...159	57.11.3473	47 kOhm	2%	
	R...200	57.11.3331	330 Ohm	5%	
	R...201	57.11.3103	10 kOhm	5%	
	R...202	57.11.3124	120 kOhm	2%	
	R...203	57.11.3273	27 kOhm	2%	
	R...204	57.11.3103	10 kOhm	2%	
	R...205	57.11.3471	470 Ohm	2%	
	R...206	57.11.3471	470 Ohm	2%	
	R...207	57.11.3471	470 Ohm	2%	
	R...208	57.11.3471	470 Ohm	2%	
	R...209	57.11.3471	470 Ohm	2%	
	R...210	57.11.3472	4.7 kOhm	2%	
	R...211	57.11.3103	10 kOhm	1%	
	R...212	57.11.3992	3.9 kOhm	1%	
	R...213		not used		
	R...214	57.11.3102	1 kOhm	2%	
	R...215	57.11.3822	8.2 kOhm	2%	

Cer=Ceramic, El=Electrolytic, Sal=Solid aluminium, PETP=Polyesterfilm.

MANUFACTURERS: Del=Delevan, Ex=Exar, Fa=Ferranti, Gow=Gowanda,
ITT=Intermetall, Mot=Motorola, NEC=Nippon Electric Corp.,
NS=National Semiconductors, Ph=Philips, Ra=Raytheon,
Sie=Siemens, Sig=Signetics, Six=Siliconix, Tf=Telefunken,
Tho=Thomson-CSF, TI=Texas Instruments.

ORIG 89/08/24

BLOCK DIAGRAM
REPRODUCE AMPLIFIER 1.820.710

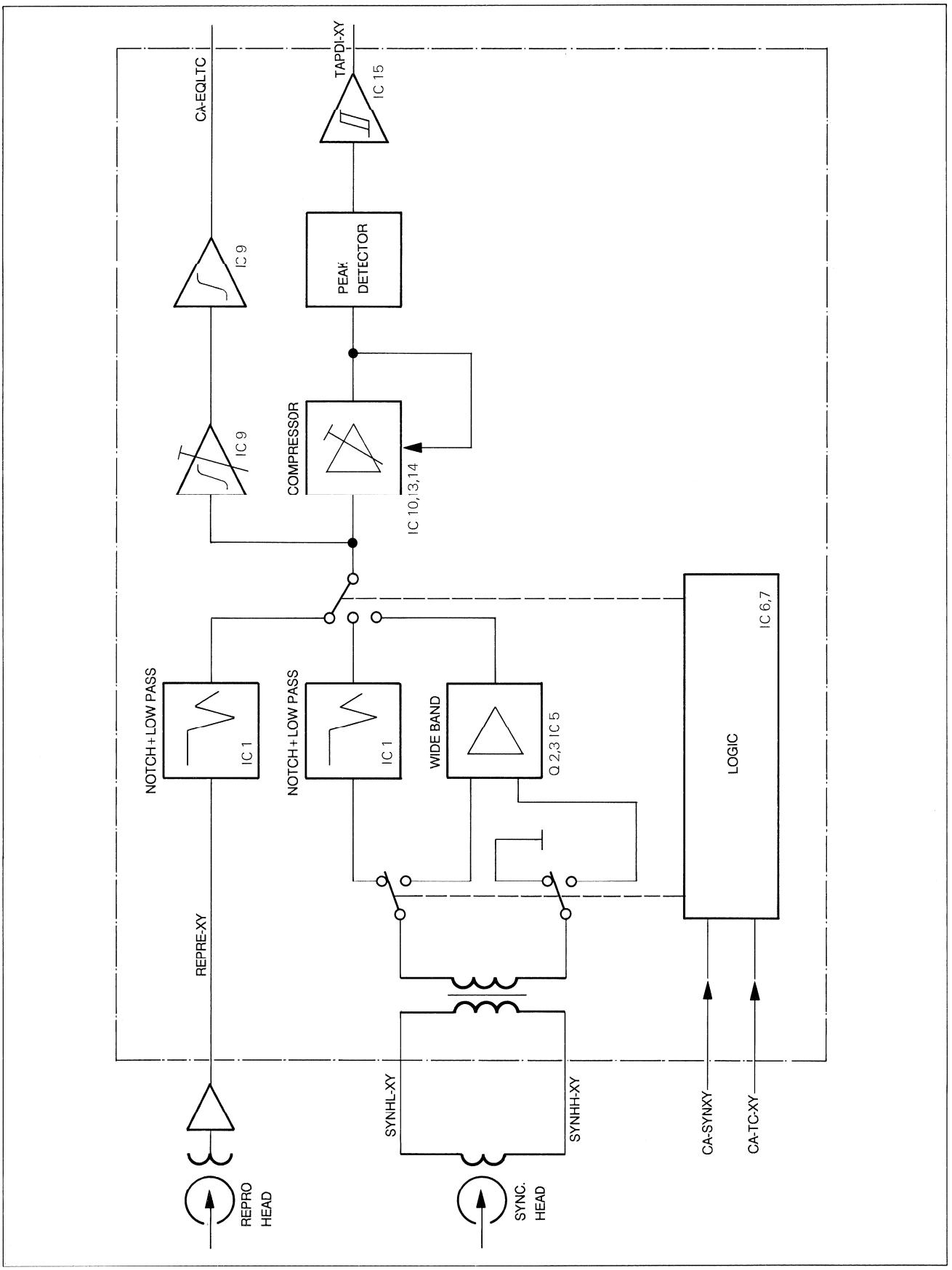

LEVEL DIAGRAMS REPRODUCE AMPLIFIER

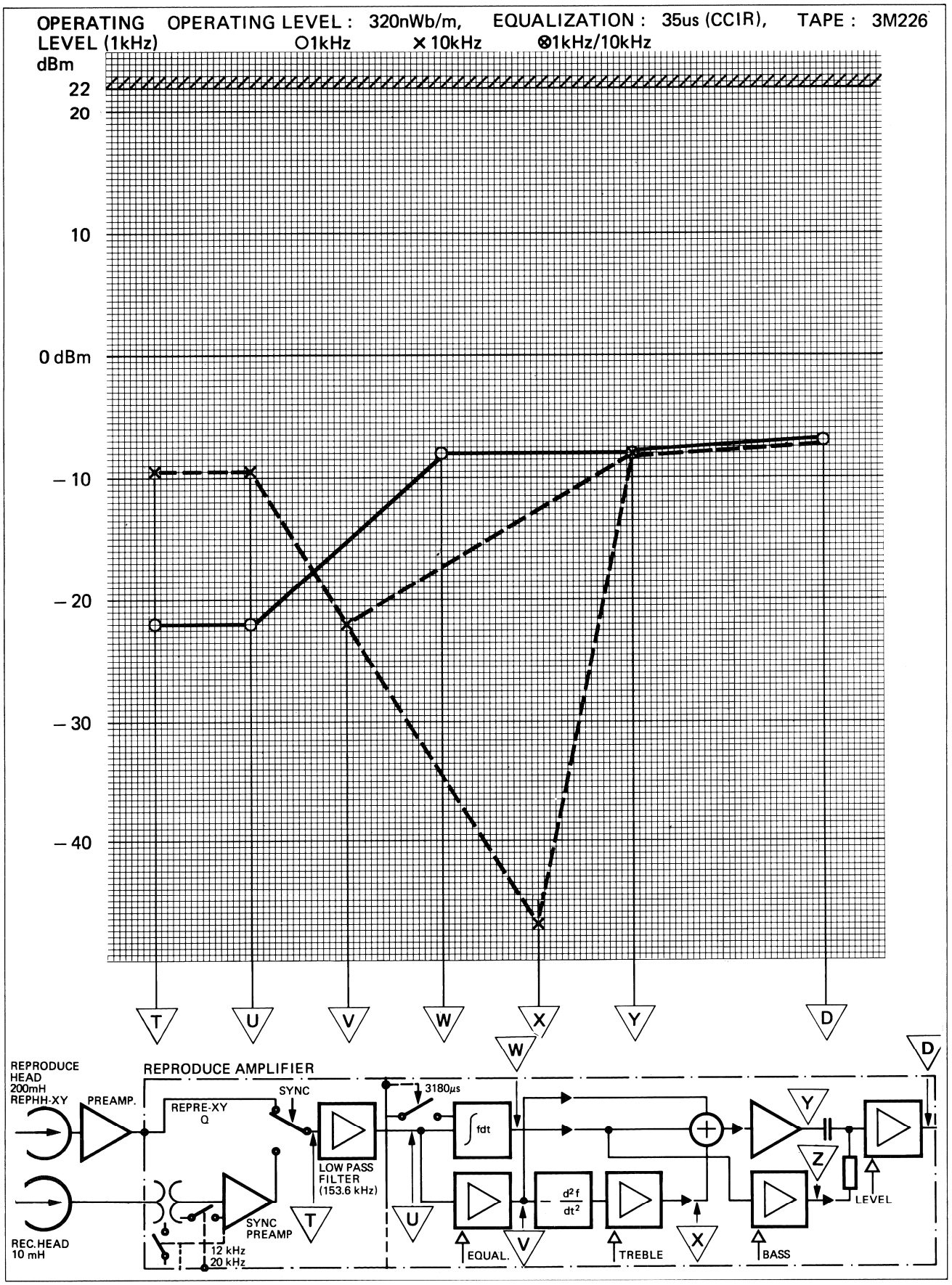

REPRODUCE AMPLIFIER 1.820.710.83

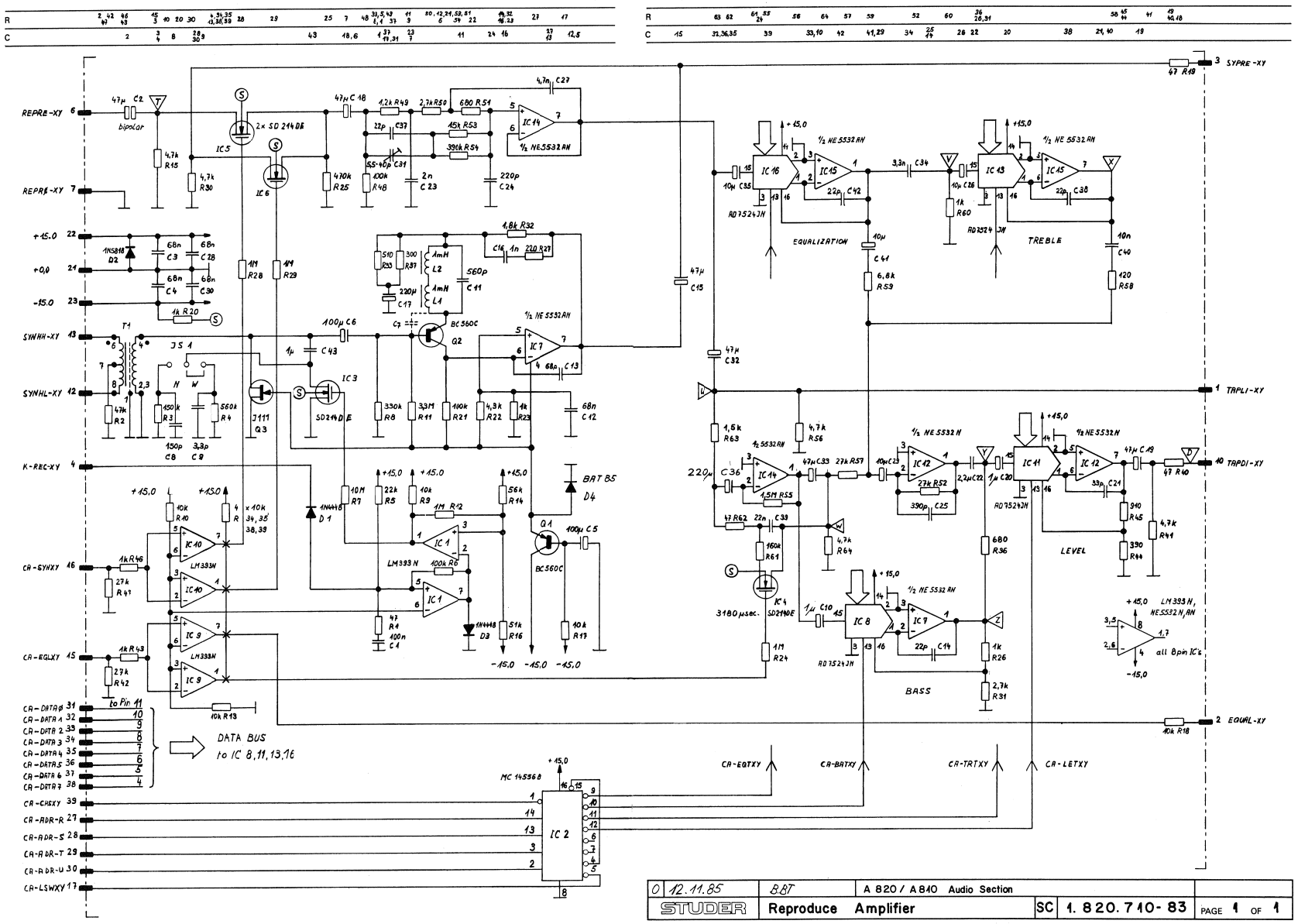

REPRODUCE AMPLIFIER 1.820.710.83

COMPONENT SIDE

REPRODUCE AMPLIFIER 1.820.740-83

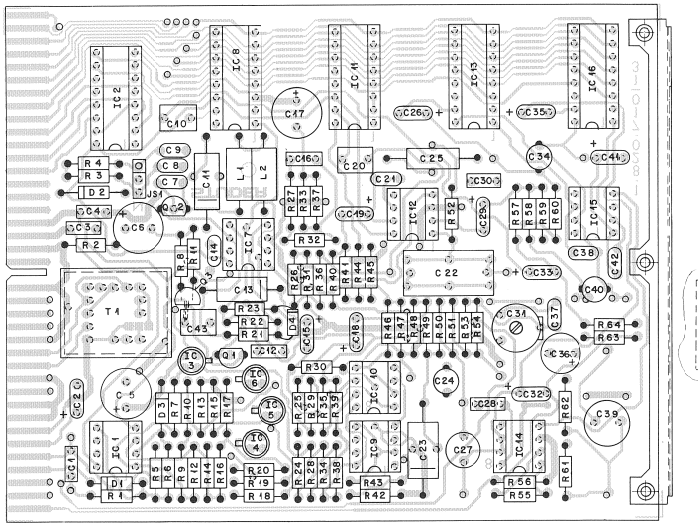

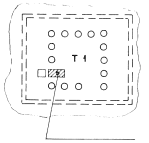

IND.	POS.NO.	PART NO.	VALUE	SPECIFICATIONS / EQUIVALENT	MANUF.
	C..0001	59.06.5104	0.1 uF	5%, 63V, PETP	
(00)	C..0002	59.26.0470	47 uF	-20%, 6.3V, Sal	Ph
	C..0002	59.99.0401	47 uF	-20%, 16V, El bipolar	
	C..0003	59.06.0683	68 nF	10%, 63V, PETP	
	C..0004	59.06.0683	68 nF	10%, 63V, PETP	
	C..0005	59.22.5101	100 uF	-20%, 25V, El	
	C..0006	59.22.5101	100 uF	-20%, 25V, El	
	C..0007		not used		
	C..0008	59.34.2151	150 pF	2%, N150, Cer	
	C..0009	59.34.0339	3.3 pF	5%, N150, Cer	
	C..0010	59.06.5105	1 uF	5% PETP	
	C..0011	59.12.7561	560 pF	1%, 63V, PS	
	C..0012	59.06.0683	68 nF	10%, 63V, PETP	
	C..0013	59.04.9680	68 pF	5%, 63V, PP	
	C..0014	59.34.2220	22 pF	5%, N150, Cer	
	C..0015	59.26.0470	47 uF	-20%, 6.3V, Sal	Ph
	C..0016	59.06.0102	1 nF	10%, 63V, PETP	
	C..0017	59.22.2221	220 uF	-10%, 6V, El	
	C..0018	59.26.0470	47 uF	-20%, 6.3V, Sal	Ph
	C..0019	59.26.0470	47 uF	-20%, 6.3V, Sal	Ph
	C..0020	59.06.5105	1 uF	5% PETP	
	C..0021	59.34.2330	33 pF	5%, N150, Cer	
	C..0022	59.02.2225	2.2 uF	5% 63V, MPC	
	C..0023	59.12.7202	2 nF	1%, 63V, PS	
	C..0024	59.05.1221	220 pF	1%, 63V, PP	
	C..0025	59.12.7391	390 pF	1%, 63V, PS	
	C..0026	59.26.2100	10 uF	-20%, 16V, Sal	Ph
	C..0027	59.05.1472	4.7 nF	1%, 63V, PP	
	C..0028	59.06.0683	68 nF	10%, 63V, PETP	
	C..0029	59.26.2100	10 uF	-20%, 16V, Sal	Ph
	C..0030	59.06.0683	68 nF	10%, 63V, PETP	
	C..0031	59.18.0108	40 pF	Trimmer Capacitor, Philips Nr 2222.808.32409	
	C..0032	59.26.0470	47 uF	-20%, 6.3V, Sal	Ph
	C..0033	59.26.0470	47 uF	-20%, 6.3V, Sal	Ph
	C..0034	59.05.1332	3.3 nF	1%, 63V, PP	
	C..0035	59.26.2100	10 uF	-20%, 16V, Sal	Ph
	C..0036	59.22.3221	220 uF	-10%, 10V, El	

IND.	POS.NO.	PART NO.	VALUE	SPECIFICATIONS / EQUIVALENT	MANUF.
	C..0037	59.34.2220	22 pF	5%, N150, Cer	
	C..0038	59.34.2220	22 pF	5%, N150, Cer	
	C..0039	59.05.1223	22 nF	1%, 63V, PP	
	C..0040	59.05.1103	10 nF	1%, 63V, PP	
	C..0041	59.26.2100	10 uF	-20%, 16V, Sal	Ph
	C..0042	59.34.2220	22 pF	5%, N150, Cer	
	C..0043	59.06.5105	1 uF	5%, 50V, PETP	
	D..0001	50.04.0125	1N 4448		
	D..0002	50.04.0512	1N 5818	145819	Mot
	D..0003	50.04.0125	1N 4448		
	D..0004	50.04.0127	BAT 85	BAS40-02, BAT 42	Ph,Sie,Tho-CSF
	IC.0001	50.05.0283	LM393N		NS,TI
	IC.0002	50.07.0004	CD4556B	MC 14 556B, 4556B	RCA,Mot,Fc
	IC.0003	50.11.0106	SD 214 DE	BSD 214	Ph,Six
	IC.0004	50.11.0106	SD 214 DE	BSD 214	Ph,Six
	IC.0005	50.11.0106	SD 214 DE	BSD 214	Ph,Six
	IC.0006	50.11.0106	SD 214 DE	BSD 214	Ph,Six
	IC.0007	50.09.0106	NE5532AN	AD5532AN, 5532ANB	Sig+Ex+Ra
	IC.0008	50.07.0002	AD7524JN	MP 7524 JN	ADI,MpS
	IC.0009	50.05.0283	LM393N		NS,TI
	IC.0010	50.05.0283	LM393N		NS,TI
	IC.0011	50.07.0002	AD7524JN	MP 7524 JN	ADI,MpS
	IC.0012	50.09.0105	NE5532N	XR 5532 N, 5512 NB	Sig+Ex+Ra
	IC.0013	50.07.0002	AD7524JN	MP 7524 JN	ADI,MpS
	IC.0014	50.09.0106	NE5532AN	XR 5532AN, 5532ANB	Sig+Ex+Ra
	IC.0015	50.09.0106	NE5532AN	XR 5532AN, 5532ANB	Sig+Ex+Ra
	IC.0016	50.07.0002	AD7524JN	MP 7524 JN	ADI,MpS
	J5.0001			See note 1	
	L..0001	62.01.0128	1 mH	Gowanda Nr. LT-104, Delevan Nr. 1641-105	
	L..0002	62.01.0128	1 mH	Gowanda Nr. LT-104, Delevan Nr. 1641-105	
	Q..0001	50.03.0496	BC560		Sie+Mot+Philf
	Q..0002	50.03.0496	BC560		Sie+Mot+Philf

IND.	POS.NO.	PART NO.	VALUE	SPECIFICATIONS / EQUIVALENT	MANUF.
	Q..0003	50.03.0216	J 111		Six
	R..0001	57.11.4470	47 Ohm	5%	
	R..0002	57.11.4473	47 kOhm	5%	
	R..0003	57.11.4154	150 kOhm	2%	
	R..0004	57.11.4564	560 kOhm	2%	
	R..0005	57.11.4223	22 kOhm	2%	
	R..0006	57.11.4104	100 kOhm	5%	
	R..0007	57.11.4106	10 MOhm	5%	
	R..0008	57.11.4334	330 kOhm	2%	
	R..0009	57.11.4103	10 kOhm	5%	
	R..0010	57.11.4103	10 kOhm	5%	
	R..0011	57.11.4335	3.3 MOhm	2%	
	R..0012	57.11.4105	1 MOhm	5%	
	R..0013	57.11.4103	10 kOhm	5%	
	R..0014	57.11.4563	56 kOhm	2%	
	R..0015	57.11.4472	4.7 kOhm	5%	
	R..0016	57.11.3513	51 kOhm	1%	
	R..0017	57.11.4103	10 kOhm	5%	
	R..0018	57.11.4103	10 kOhm	5%	
	R..0019	57.11.4470	47 Ohm	5%	
	R..0020	57.11.4102	1 kOhm	5%	
	R..0021	57.11.4104	100 kOhm	5%	
	R..0022	57.11.3632	6.3 kOhm	1%	
	R..0023	57.11.4102	1 kOhm	5%	
	R..0024	57.11.4105	1 MOhm	5%	
	R..0025	57.11.4474	470 kOhm	5%	
	R..0026	57.11.4102	1 kOhm	5%	
	R..0027	57.11.4221	220 Ohm	5%	
	R..0028	57.11.4105	1 MOhm	5%	
	R..0029	57.11.4105	1 MOhm	5%	
	R..0030	57.11.4472	4.7 kOhm	5%	
	R..0031	57.11.4272	2.7 kOhm	2%	
	R..0032	57.11.4182	1.8 kOhm	2%	
	R..0033	57.11.3511	510 Ohm	2%	
	R..0034	57.11.4103	10 kOhm	5%	
	R..0035	57.11.4103	10 kOhm	5%	

IND.	POS.NO.	PART NO.	VALUE	SPECIFICATIONS / EQUIVALENT	MANUF.
	R..0036	57.11.4681	680 Ohm	2%	
	R..0037	57.11.3301	300 Ohm	2%	
	R..0038	57.11.4103	10 kOhm	5%	
	R..0039	57.11.4103	10 kOhm	5%	
	R..0040	57.11.4470	47 Ohm	5%	
	R..0041	57.11.4472	4.7 kOhm	5%	
	R..0042	57.11.4273	27 kOhm	5%	
	R..0043	57.11.4102	1 kOhm	5%	
	R..0044	57.11.4391	390 Ohm	2%	
	R..0045	57.11.3911	910 Ohm	1%	
	R..0046	57.11.4102	1 kOhm	5%	
	R..0047	57.11.4273	27 kOhm	5%	
	R..0048	57.11.4104	100 kOhm	5%	
	R..0049	57.11.3122	1.2 kOhm	1%	
	R..0050	57.11.3272	2.7 kOhm	1%	
	R..0051	57.11.3681	680 Ohm	1%	
	R..0052	57.11.4273	27 kOhm	2%	
	R..0053	57.11.3153	15 kOhm	1%	
	R..0054	57.11.4394	390 kOhm	5%	
	R..0055	57.11.5155	1.5 MOhm	5%	
	R..0056	57.11.4472	4.7 kOhm	5%	
	R..0057	57.11.4273	27 kOhm	2%	
	R..0058	57.11.4121	120 Ohm	2%	
	R..0059	57.11.4682	6.8 kOhm	2%	
	R..0060	57.11.4102	1 kOhm	5%	
	R..0061	57.11.3164	160 kOhm	1%	
	R..0062	57.11.4470	47 Ohm	5%	
	R..0063	57.11.3152	1.5 kOhm	1%	
	R..0064	57.11.4472	4.7 kOhm	5%	

Note 1 - Contact pin: Studer 54.01.0020, Berg 75 160-102-36
bridge: Studer 54.01.0021, Philips 2422 024 88003

PETP=Polyesterfilm, Sal=Solid-Aluminium, Cer=Ceramic
PS=Polystrol, PP=Polypropylen, El=Electrolytic
MPE=Metalized Polycarbonate

MANUFACTURER: ADI=Analog Devices Inc., Ex=Exar, Fc=Fairchild,
Mot=Motorola, MpS=Micropower Semiconductors,
NS=National Semiconductors, Ph=Philips, Ra=Raytheon,
RCA=Radio Corp. of America, Sie=Siemens, Sig=Signetics,
Six=Siliconix, Tf=Telefunken, Tho-CSF=Thomson Semiconductor,
TI=Texas Instruments.

ORIG 85/11/12

REPRODUCE AMPLIFIER 1.820.710.84

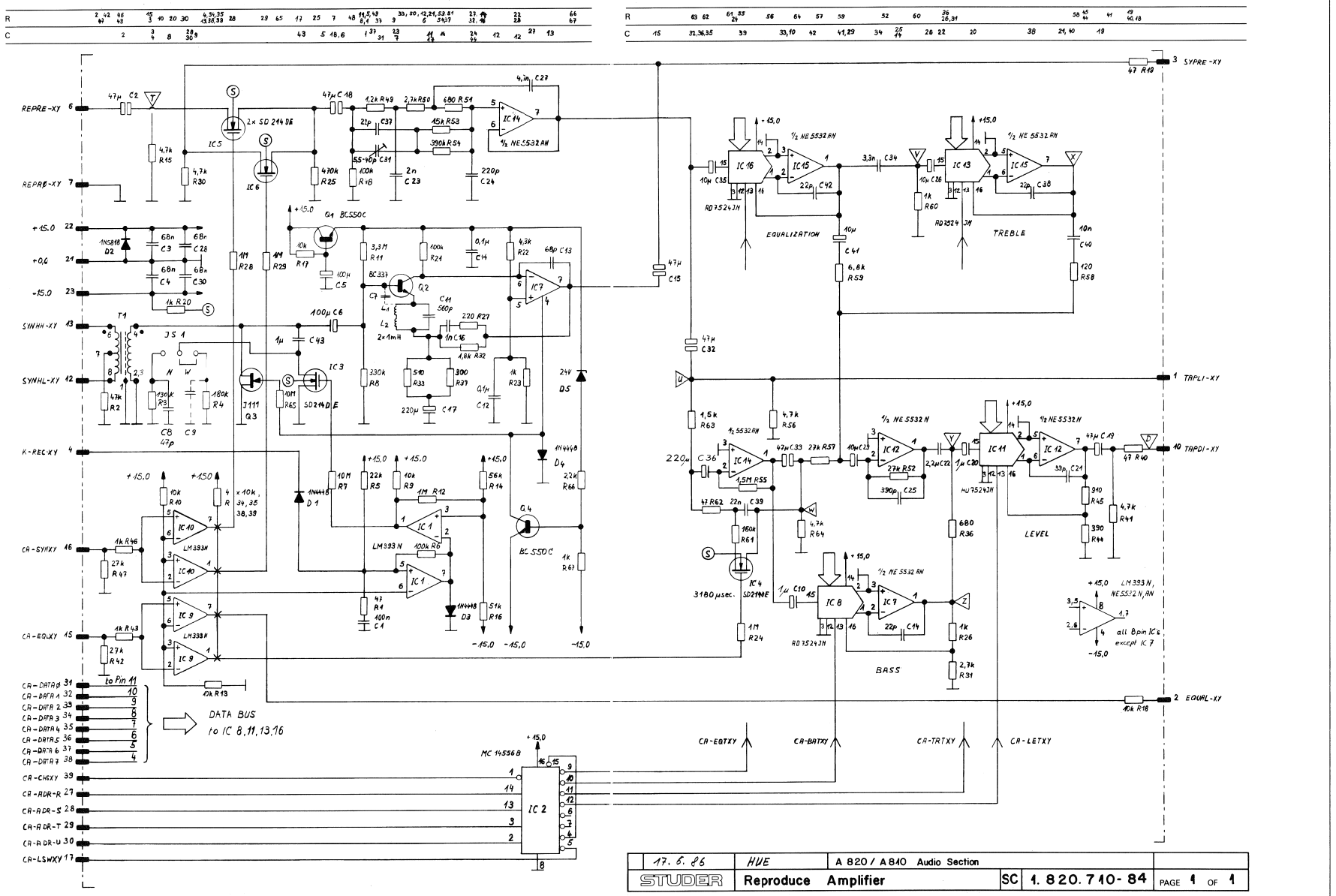

17. 6. 86	HUE	A 820 / A 840 Audio Section		
STUDER	Reproduce Amplifier	SC	1. 820. 710- 84	PAGE 1 OF 1

COMPONENT SIDE

REPRODUCE AMPLIFIER 1.820.710-84

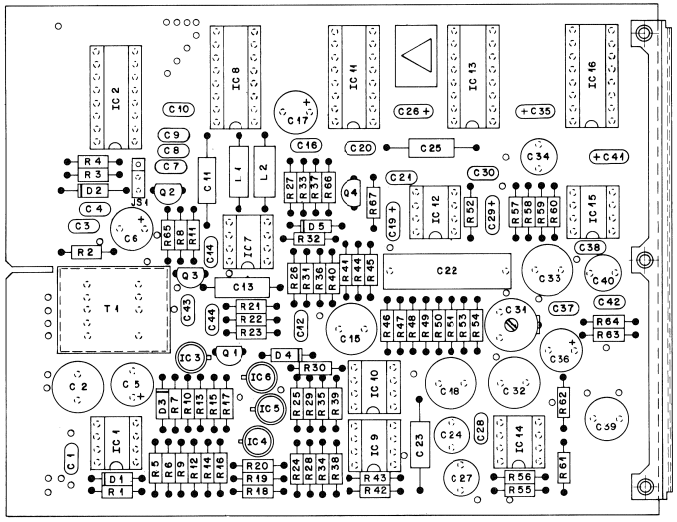

REPRODUCE AMPLIFIER 1.820.710.84

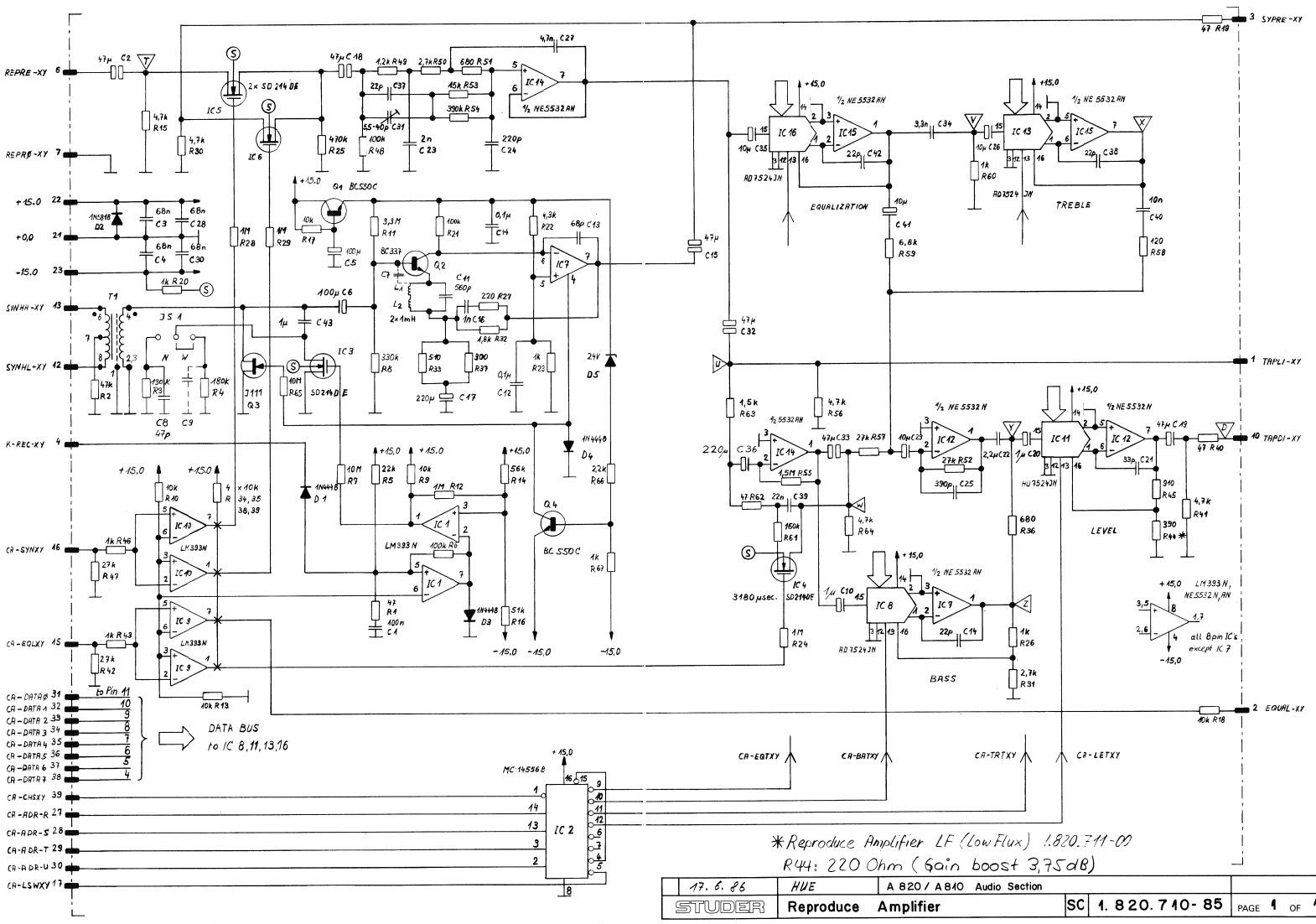

17. 6. 86	HUE	A 820 / A 810 Audio Section			
STUDER	Reproduce Amplifier	SC	1. 820. 710- 85	PAGE 1	OF 1

REPRODUCE AMPLIFIER 1.820.710.85

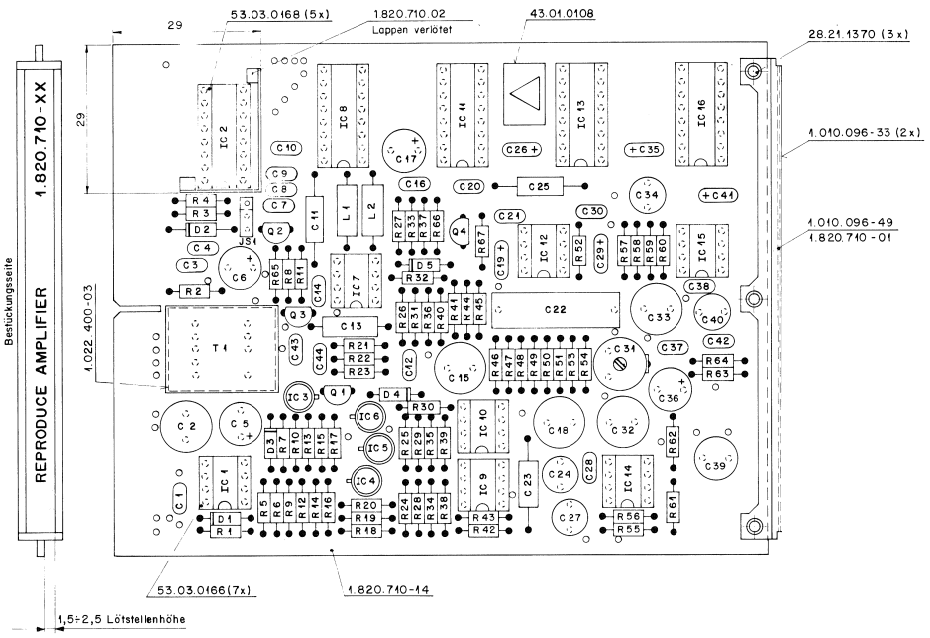

IND.	POS.NO.	PART NO.	VALUE	SPECIFICATIONS / EQUIVALENT	MANUF.
	Q....2	50.03.0516	BC337		Six
	Q....3	50.03.0216	J 111		Six
	Q....4	50.03.0407	BC550C		Sie,Ph
	R....1	57.11.3470	47 Ohm	5%	
	R....2	57.11.3479	47 kOhm	5%	
	R....3	57.11.3134	130 kOhm	2%	
	R....4	57.11.3184	180 kOhm	2%	
	R....5	57.11.3223	22 kOhm	2%	
	R....6	57.11.3104	100 kOhm	5%	
	R....7	57.11.3106	10 MOhm	5%	
	R....8	57.11.3334	330 kOhm	2%	
	R....9	57.11.3103	10 kOhm	5%	
	R....10	57.11.3103	10 kOhm	5%	
	R....11	57.11.3335	3.3 MOhm	2%	
	R....12	57.11.3105	1 MOhm	5%	
	R....13	57.11.3103	10 kOhm	5%	
	R....14	57.11.3563	56 kOhm	2%	
	R....15	57.11.3472	4.7 kOhm	5%	
	R....16	57.11.3513	51 kOhm	1%	
	R....17	57.11.3103	10 kOhm	5%	
	R....18	57.11.3103	10 kOhm	5%	
	R....19	57.11.3470	47 Ohm	5%	
	R....20	57.11.3102	1 kOhm	5%	
	R....21	57.11.3104	100 kOhm	2%	
	R....22	57.11.3432	4.3 kOhm	1%	
	R....23	57.11.3102	1 kOhm	2%	
	R....24	57.11.3105	1 MOhm	5%	
	R....25	57.11.3474	470 kOhm	5%	
	R....26	57.11.3102	1 kOhm	2%	
	R....27	57.11.3221	220 Ohm	5%	
	R....28	57.11.3105	1 MOhm	5%	
	R....29	57.11.3105	1 MOhm	5%	
	R....30	57.11.3472	4.7 kOhm	5%	
	R....31	57.11.3272	2.7 kOhm	2%	
	R....32	57.11.3182	1.8 kOhm	2%	
	R....33	57.11.3511	510 Ohm	2%	

IND.	POS.NO.	PART NO.	VALUE	SPECIFICATIONS / EQUIVALENT	MANUF.
	R....34	57.11.3103	10 kOhm	5%	
	R....35	57.11.3103	10 kOhm	5%	
	R....36	57.11.3681	680 Ohm	2%	
	R....37	57.11.3301	300 Ohm	2%	
	R....38	57.11.3103	10 kOhm	5%	
	R....39	57.11.3103	10 kOhm	5%	
	R....40	57.11.3470	47 Ohm	5%	
	R....41	57.11.3472	4.7 kOhm	5%	
	R....42	57.11.3273	27 kOhm	5%	
	R....43	57.11.3102	1 kOhm	5%	
	R....44	57.11.3391	390 Ohm	2%	
	R....45	57.11.3911	910 Ohm	1%	
	R....46	57.11.3102	1 kOhm	5%	
	R....47	57.11.3273	27 kOhm	5%	
	R....48	57.11.3104	100 kOhm	5%	
	R....49	57.11.3122	1.2 kOhm	1%	
	R....50	57.11.3272	2.7 kOhm	1%	
	R....51	57.11.3681	680 Ohm	1%	
	R....52	57.11.3273	27 kOhm	2%	
	R....53	57.11.3153	15 kOhm	1%	
	R....54	57.11.3394	390 kOhm	5%	
	R....55	57.11.5195	1.5 MOhm	5%	
	R....56	57.11.3472	4.7 kOhm	5%	
	R....57	57.11.3273	27 kOhm	2%	
	R....58	57.11.3121	120 Ohm	2%	
	R....59	57.11.3682	6.8 kOhm	2%	
	R....60	57.11.3102	1 kOhm	5%	
	R....61	57.11.3184	180 kOhm	1%	
	R....62	57.11.3470	47 Ohm	5%	
	R....63	57.11.3152	1.5 kOhm	1%	
	R....64	57.11.3472	4.7 kOhm	5%	
	R....65	57.11.5106	10 MOhm	5%	
	R....66	57.11.3222	2.2 kOhm	5%	
	R....67	57.11.3102	1.0 kOhm	5%	

IND.	POS.NO.	PART NO.	VALUE	SPECIFICATIONS / EQUIVALENT	MANUF.
	C....1	59.06.5104	0.1 uF	5%, 63V , PETP	
	C....2	59.96.0401	47 uF	-20%, 16V , El bipolar	
	C....3	59.06.0683	68 nF	10%, 63V , PETP	
	C....4	59.06.0683	68 nF	10%, 63V , PETP	
	C....5	59.22.5101	100 uF	-20%, 25V , El	
	C....6	59.22.5101	100 uF	-20%, 25V , El	
	C....7	not used			
	C....8	59.34.2470	47 pF	2%, N150 , Cer	
	C....9	not used			
	C....10	59.06.5105	1 uF	5%, PETP	
	C....11	59.12.7561	560 pF	1%, 63V , PS	
	C....12	59.06.5104	0.1 uF	5%, 63V , PETP	
	C....13	59.04.9680	68 pF	5%, 63V , PP	
	C....14	59.34.2220	22 pF	5%, N150 , Cer	
	C....15	59.96.0401	47 uF	-20%, 16V , El bipolar	
	C....16	59.06.0102	1 nF	10%, 63V , PETP	
	C....17	59.22.2221	220 uF	-10%, 6V , El	
	C....18	59.96.0401	47 uF	-20%, 16V , El bipolar	
	C....19	59.26.0470	47 uF	-20%, 6.3V , Sal	Ph
	C....20	59.06.5105	1 uF	5%, 50V , PETP	
	C....21	59.34.2330	33 pF	5%, N150 , Cer	
	C....22	59.02.2225	2.2 uF	5% 63V , MPC	
	C....23	59.12.7202	2 nF	1%, 63V , PS	
	C....24	59.05.1221	220 pF	1%, 63V , PP	
	C....25	59.12.7391	390 pF	1%, 63V , PS	
	C....26	59.26.2100	10 uF	-20%, 16V , Sal	Ph
	C....27	59.05.1472	4.7 nF	1%, 63V , PP	
	C....28	59.06.0683	68 nF	10%, 63V , PETP	
	C....29	59.26.2100	10 uF	-20%, 16V , Sal	Ph
	C....30	59.06.0683	68 nF	10%, 63V , PETP	
	C....31	59.18.0108	40 pF	Trimmer capacitor, Philips Nr 2222.808.32409	
	C....32	59.96.0401	47 uF	-20%, 16V , El bipolar	
	C....33	59.96.0401	47 uF	-20%, 16V , El bipolar	
	C....34	59.05.1332	3.3 nF	1%, 63V , PP	
	C....35	59.26.2100	10 uF	-20%, 16V , Sal	Ph
	C....36	59.22.3221	220 uF	-20%, 10V , El	
	C....37	59.34.2220	22 pF	5%, N150 , Cer	

IND.	POS.NO.	PART NO.	VALUE	SPECIFICATIONS / EQUIVALENT	MANUF.
	C....38	59.34.2220	22 pF	5%, N150 , Cer	
	C....39	59.05.1223	22 nF	1%, 63V , PP	
	C....40	59.05.1103	10 nF	1%, 63V , PP	
	C....41	59.26.2100	10 uF	-20%, 16V , Sal	Ph
	C....42	59.34.2220	22 pF	5%, N150 , Cer	
	C....43	59.06.5105	1 uF	5%, 50V , PETP	
	C....44	59.06.0104	0.1 uF	10%, 50V , PETP	
	D....1	50.04.0125	1N 4448		
	D....2	50.04.0512	1N 5818	1N5819	Mot
	D....3	50.04.0125	1N 4448		
	D....4	50.04.0125	1N 4448		
	D....5	50.04.1121	24 V	5% 0.4W	
	IC....1	50.05.0283	LM393N		NS,TI
	IC....2	50.07.0004	CD4556B	MC 14 556B, 4556B	RCA,Mot,Fc
	IC....3	50.11.0106	SD 214 DE	BSD 214	Ph,Six
	IC....4	50.11.0106	SD 214 DE	BSD 214	Ph,Six
	IC....5	50.11.0106	SD 214 DE	BSD 214	Ph,Six
	IC....6	50.11.0106	SD 214 DE	BSD 214	Ph,Six
	IC....7	50.09.0106	NE5532AN	XR5532AN, 5532ANB	Sig,Ex,Ra
	IC....8	50.07.0002	AD7524JN	MP 7524 JN	ADI,MpS
	IC....9	50.05.0283	LM393N		NS,TI
	IC....10	50.05.0283	LM393N		NS,TI
	IC....11	50.07.0002	AD7524JN	MP 7524 JN	ADI,MpS
	IC....12	50.09.0165	NE5532N	XR 5532 N, 5532 NB	Sig,Ex,Ra
	IC....13	50.07.0002	AD7524JN	MP 7524 JN	ADI,MpS
	IC....14	50.09.0106	NE5532AN	XR 5532AN, 5532ANB	Sig,Ex,Ra
	IC....15	50.09.0106	NE5532AN	XR 5532AN, 5532ANB	Sig,Ex,Ra
	IC....16	50.07.0002	AD7524JN	MP 7524 JN	ADI,MpS
	JS....1			See note 1	
	L....1	62.01.0128	1 mH	Gowanda Nr. 17-104, Delevan Nr. 1641-105	
	L....2	62.01.0128	1 mH	Gowanda Nr. 17-104, Delevan Nr. 1641-105	
	Q....1	50.03.0407	BC550C		Sie,Ph

IND.	POS.NO.	PART NO.	VALUE	SPECIFICATIONS / EQUIVALENT	MANUF.

Note 1 - Contact pin: Studer 54.01.0020, Berg 75 160-102-36
Bridge: Studer 54.01.0021, Philips 2422 024 88003

PETP=Polyesterfilm, Sal=Solid-Aluminium, Cer=Ceramic
PS=Polystyrol, PP=Polypropylen, El=Electrolytic
MPC=Metalized Polycarbonate

MANUFACTURER: ADI=Analog Devices Inc., Ex=Exar, Fc=Fairchild,
Mot=Motorola, MpS=Micropower Semiconductors,
NS=National Semiconductors, Ph=Philips, Ra=Raytheon,
RCA=Radio corp. of America, Sie=Siemens, Sig=Signetics,
Six=Siliconix, Tfk=Telefunken, Tho-CSF=Thomson Semiconductor,
TI=Texas Instruments.

ORIG 88/10/26

BLOCK DIAGRAM
SWITCHING / METRING UNIT 1.820.716

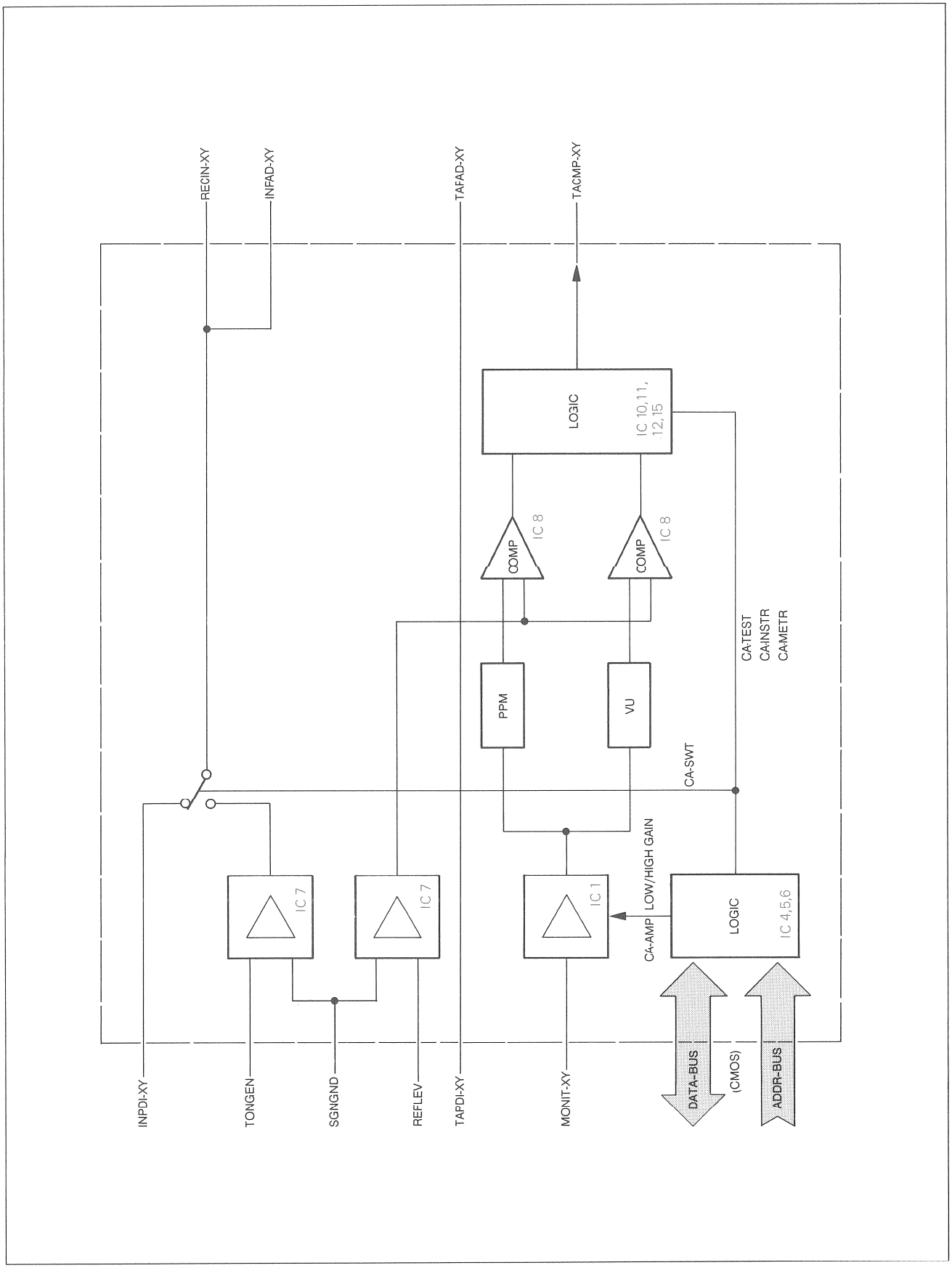

SWITCHING / METERING UNIT 1,820.716.00

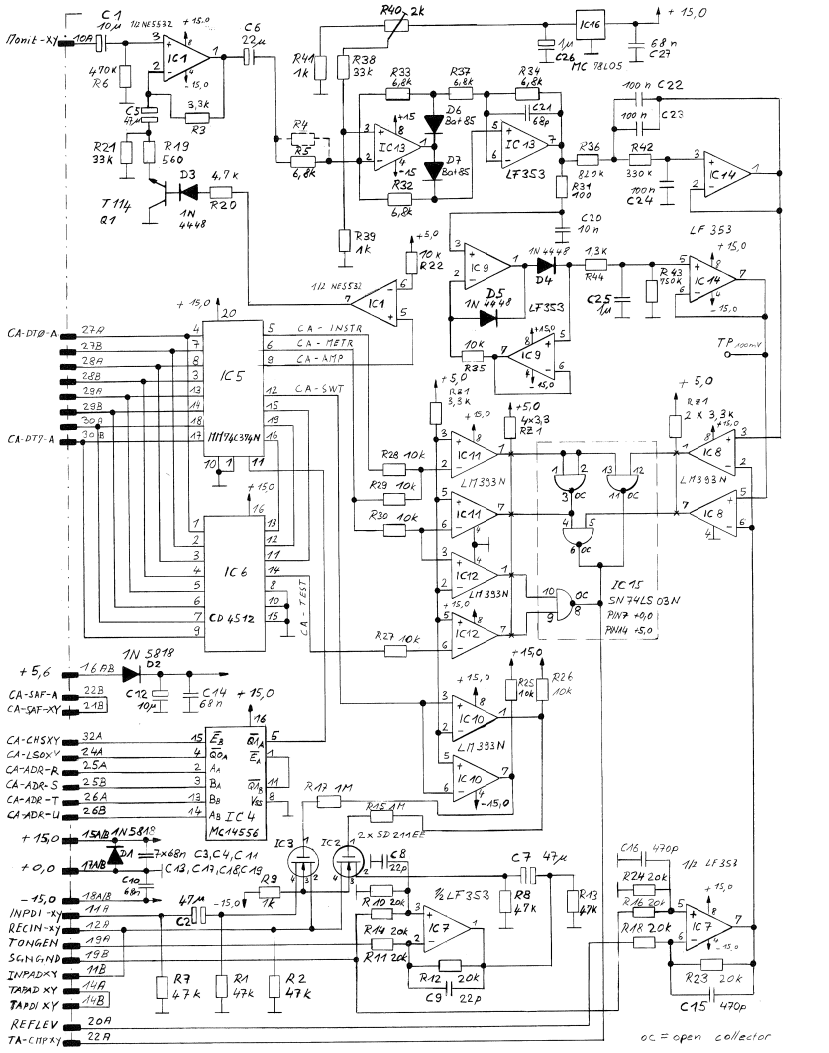

0 6.10.86 H. Hegi				PAGE 1 OF 1
STUDER	SWITCHING + METERING UNIT		SC	1.820.716-00

SWITCHING / METERING UNIT 1.820.716.00

COMPONENT SIDE

SWITCHING UNIT 1.820.716-00

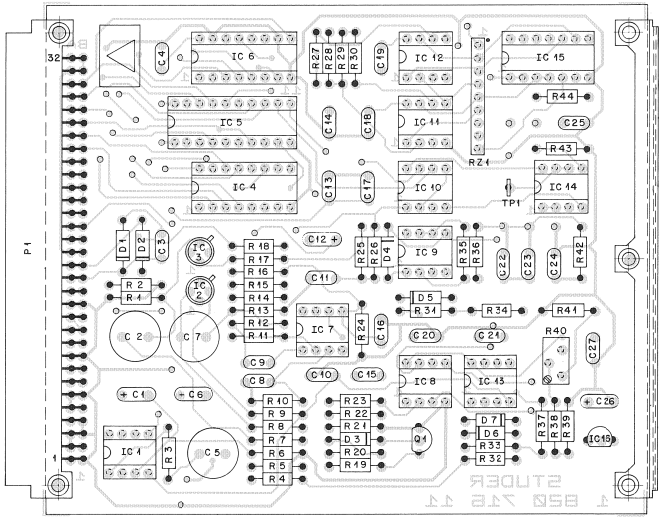

IND.	POS.NO.	PART NO.	VALUE	SPECIFICATIONS / EQUIVALENT	MANUF.
	C....1	59.26.2100	10 uF	20%, 16V, Sal	
	C....2	59.99.0401	47 uF	10%, 16V, ElBip	
	C....3	59.06.0683	68 nF	10%, 63V, PETP	
	C....4	59.06.0683	68 nF	10%, 63V, PETP	
	C....5	59.99.0401	47 uF	10%, 16V, ElBip	
	C....6	59.26.1220	22 uF	20%, 10V, Sal	
	C....7	59.99.0401	47 uF	10%, 16V, ElBip	
	C....8	59.34.2220	22 pF	5%, N150, Cer	
	C....9	59.34.2220	22 pF	5%, N150, Cer	
	C....10	59.06.0683	68 nF	10%, 63V, PETP	
	C....11	59.06.0683	68 nF	10%, 63V, PETP	
	C....12	59.26.2100	10 uF	20%, 16V, Sal	
	C....13	59.06.0683	68 nF	10%, 63V, PETP	
	C....14	59.06.0683	68 nF	10%, 63V, PETP	
	C....15	59.34.5471	470 pF	5%, N1500, Cer	
	C....16	59.34.5471	470 pF	5%, N1500, Cer	
	C....17	59.06.0683	68 nF	10%, 63V, PETP	
	C....18	59.06.0683	68 nF	10%, 63V, PETP	
	C....19	59.06.0683	68 nF	10%, 63V, PETP	
	C....20	59.06.0103	10 nF	10%, 63V, PETP	
	C....21	59.34.4680	68 pF	5%, N750, Cer	
	C....22	59.06.5104	100 nF	5%, 63V, PETP	
	C....23	59.06.5104	100 nF	5%, 63V, PETP	
	C....24	59.06.5104	100 nF	5%, 63V, PETP	
	C....25	59.06.5105	1 uF	5%, 50V, PETP	
	C....26	59.26.9109	1 uF	20%, 40V, Sal	
	C....27	59.06.0683	68 nF	10%, 63V, PETP	
	D....1	50.04.05.2	1N 5818	1N 5819	Mot
	D....2	50.04.05.2	1N 5818	1N 5819	Mot
	D....3	50.04.0125	1N 4448		Fc,ITT,Phs,Ses,Tf
	D....4	50.04.0125	1N 4448		Fc,ITT,Phs,Ses,Tf
	D....5	50.04.0125	1N 4448		Fc,ITT,Phs,Ses,Tf
	D....6	50.04.0127	BAT 85	BAT 42, BAS 40-02	Phs,Sie,Tho
	D....7	50.04.0127	BAT 85	BAT 42, BAS 40-02	Phs,Sie,Tho
	IC....1	50.09.0186	NE5532AN	KR5532AN, RC5532ANB	Ex,Ra,Sig

IND.	POS.NO.	PART NO.	VALUE	SPECIFICATIONS / EQUIVALENT	MANUF.
	IC....2	50.11.0136	SD 214-DE	BSJ 214	Phs,Six
	IC....3	50.11.0136	SD 214-DE	BSJ 214	Phs,Six
	IC....4	50.07.0004	MC14556BCP	... 4556 ..	Mot,Phs,RCA,To
	IC....5	50.07.0003	MM74C374N		NS
	IC....6	50.07.0512	MC145128CP	... 4512 ..	Mot,Phs,RCA,To
	IC....7	50.09.0101	TL 072 CP	LF 353 N, TDB 0353 DP	NS,Tho,TI
	IC....8	50.05.0203	LM 393 N	LM 393 P, LM 393 DP	NS,Tho,TI
	IC....9	50.09.0101	TL 072 CP	LF 353 N, TDB 0353 DP	NS,Tho,TI
	IC....10	50.05.0203	LM 393 N	LM 393 P, LM 393 DP	NS,Tho,TI
	IC....11	50.05.0203	LM 393 N	LM 393 P, LM 393 DP	NS,Tho,TI
	IC....12	50.05.0203	LM 393 N	LM 393 P, LM 393 DP	NS,Tho,TI
	IC....13	50.09.0101	TL 072 CP	LF 353 N, TDB 0353 DP	NS,Tho,TI
	IC....14	50.09.0101	TL 072 CP	LF 353 N, TDB 0353 DP	NS,Tho,TI
	IC....15	50.06.0003	SN74LS03N		TI
	IC....16	50.10.0137	LM78L05ACZ	uA78L05AWC	Fc,NS
	P....1	54.11.2004		see note 1	
	Q....1	1.010.034.50		see note 2	
	R....1	57.11.4473	47 kOhm	2%	
	R....2	57.11.4473	47 kOhm	2%	
	R....3	57.11.4332	3.3 kOhm	2%	
	R....4		not used		
	R....5	57.11.3682	6.8 kOhm	1%	
	R....6	57.11.4474	470 kOhm	2%	
	R....7	57.11.4473	47 kOhm	2%	
	R....8	57.11.4473	47 kOhm	2%	
	R....9	57.11.4102	1 kOhm	2%	
	R....10	57.11.3203	20 kOhm	1%	
	R....11	57.11.3203	20 kOhm	1%	
	R....12	57.11.3203	20 kOhm	1%	
	R....13	57.11.4473	47 kOhm	2%	
	R....14	57.11.3203	20 kOhm	1%	
	R....15	57.11.4105	1 MOhm	5%	
	R....16	57.11.3203	20 kOhm	1%	
	R....17	57.11.4105	1 MOhm	5%	

IND.	POS.NO.	PART NO.	VALUE	SPECIFICATIONS / EQUIVALENT	MANUF.
	R....18	57.11.3203	20 kOhm	1%	
	R....19	57.11.4561	560 Ohm	2%	
	R....20	57.11.4472	4.7 kOhm	2%	
	R....21	57.11.4333	33 kOhm	2%	
	R....22	57.11.4103	10 kOhm	2%	
	R....23	57.11.3203	20 kOhm	1%	
	R....24	57.11.3203	20 kOhm	1%	
	R....25	57.11.4103	10 kOhm	2%	
	R....26	57.11.4103	10 kOhm	2%	
	R....27	57.11.4103	10 kOhm	2%	
	R....28	57.11.4103	10 kOhm	2%	
	R....29	57.11.4103	10 kOhm	2%	
	R....30	57.11.4103	10 kOhm	2%	
	R....31	57.11.4101	100 Ohm	2%	
	R....32	57.11.3682	6.8 kOhm	1%	
	R....33	57.11.3682	6.8 kOhm	1%	
	R....34	57.11.3682	6.8 kOhm	1%	
	R....35	57.11.4103	10 kOhm	2%	
	R....36	57.11.4824	820 kOhm	2%	
	R....37	57.11.3682	6.8 kOhm	1%	
	R....38	57.11.4333	33 kOhm	2%	
	R....39	57.11.4102	1 kOhm	2%	
	R....40	58.05.1232	2 kOhm	10%	
	R....41	57.11.4102	1 kOhm	2%	
	R....42	57.11.4334	330 kOhm	2%	
	R....43	57.11.3754	750 kOhm	1%	
	R....44	57.11.3132	1.3 kOhm	1%	
	RZ....1	57.88.4332		see note 3	
	TP....1	54.02.0320		Testpoint	

Note 1 - connector, 2 * 32 contacts:
Erni nr. 9722.533.406
Harting nr. 0902 164 6921
Souriau nr. 8609.264.51.13.765.00 E1

Note 2 - BC 237 B selected for invers mode (IBC = 3 mA)
VCE < 0.7 mV, IE 0 mA. VCE < 25 mV, IE 4 mA

Note 3 - Network 8 * 3.3 kOhm, 5%, single line:
Allen Bradley nr. 909 A 332
Beckmann nr. L - 09 - 1 - R 3.3 k
Bourns nr. 4609 M - 101 - 332
Dale nr. CSC 09 A 01 - 332 G
Sprague nr. 256 C J 332 X2 P0
Tama nr. MRG C 09 X 3.3 kOhm G
Vitrom nr. F9E 3.3 kOhm 2%

Cer=Ceramic, ElBip=Electrolytic Bipolar, PETP=Polyesterfilm,
Sal=Solic aluminium.

MANUFACTURER: Ex=Exar, Fc=Fairchild, ITT=Intermetall, Mot=Motorola,
NS=National Semiconductors, Phs=Philips, Ra=Raytheon,
RCA=RCA Corporation of America, Ses=Sescosem, Sie=Siemens,
Sig=Signetics, Six=Siliconix, Tf=Telefunken, Tho=Thomson CSF,
TI=Texas Instruments, To=Toshiba.

ORIG 86/10/06

BLOCK DIAGRAM
INTERNAL NRS CONTROLLER 1.820.815

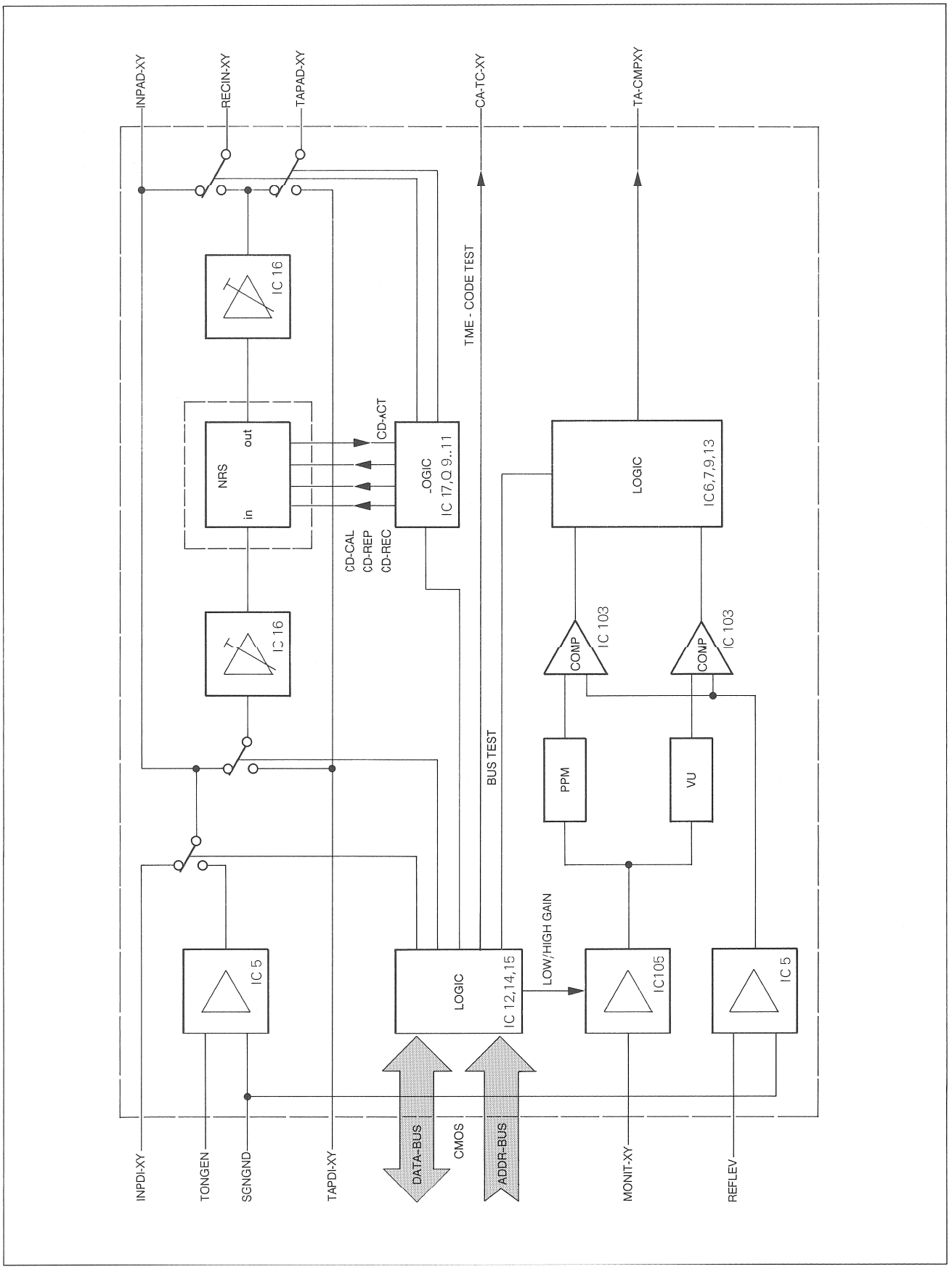

INTERNAL NRS CONTROLLER 1.820.815.00

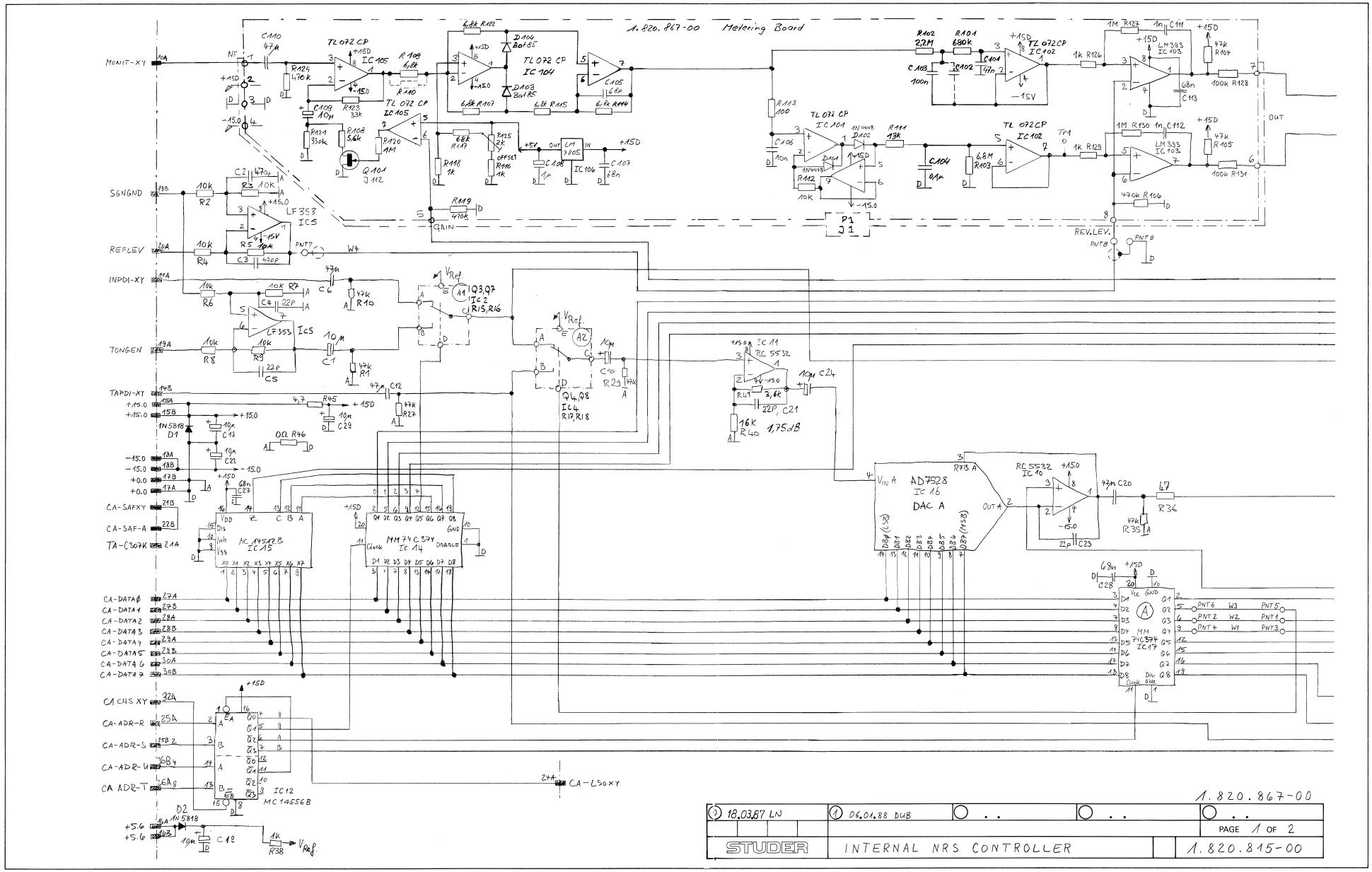

3 18.03.87 LN	1 06.01.88 DUB	. .	. .	. .
STUDER	INTERNAL NRS CONTROLLER			1.820.815-00

1.820.867-00

PAGE 1 OF 2

INTERNAL NRS CONTROLLER 1.820.815.00

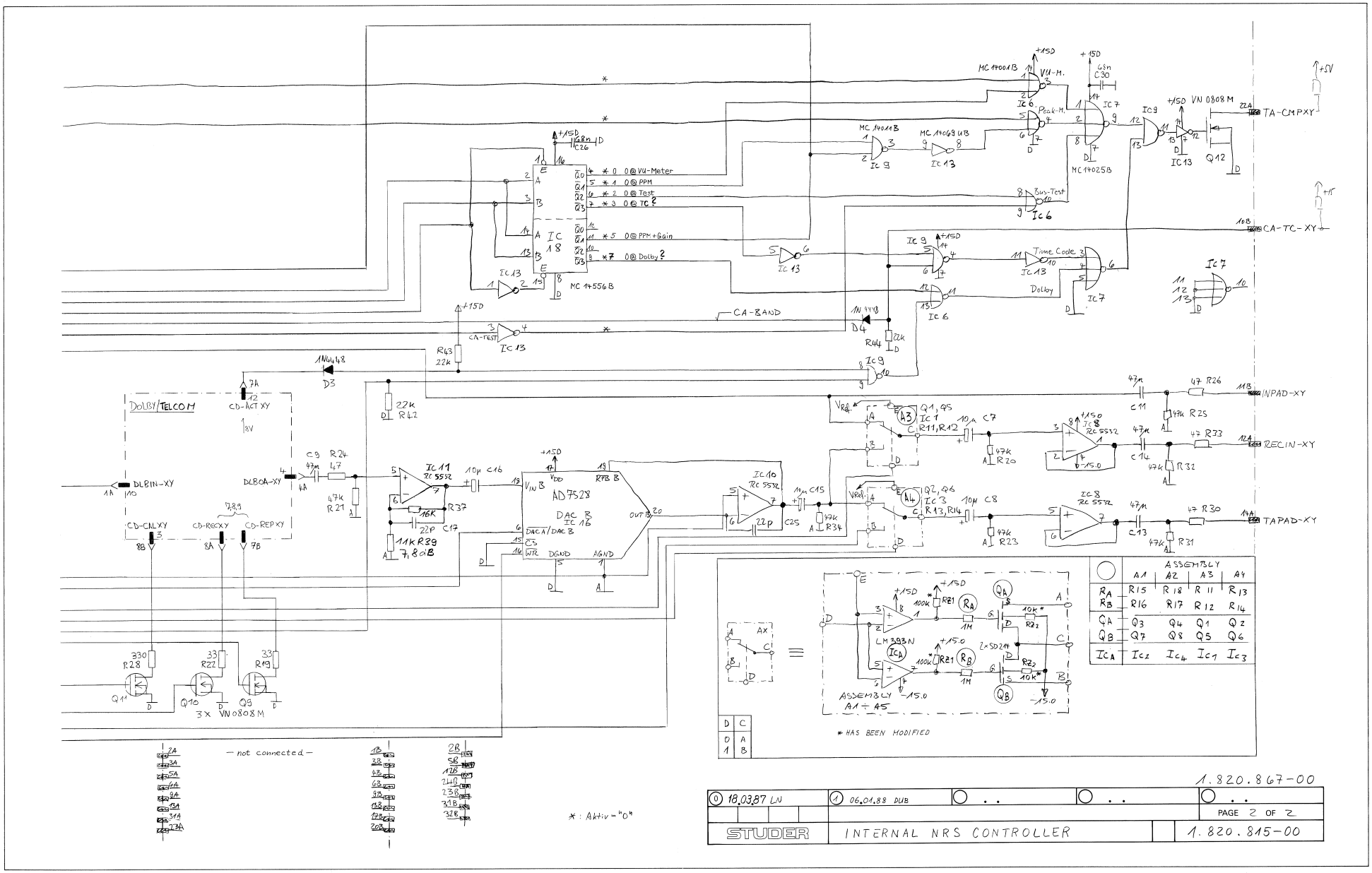

1.820.867-00

0 18.03.87 LN	1 06.01.88 DUB	. .	. .	. .
				PAGE 2 OF 2
STUDER	INTERNAL NRS CONTROLLER			1.820.815-00

INTERNAL NRS CONTROLLER 1.820.815.00

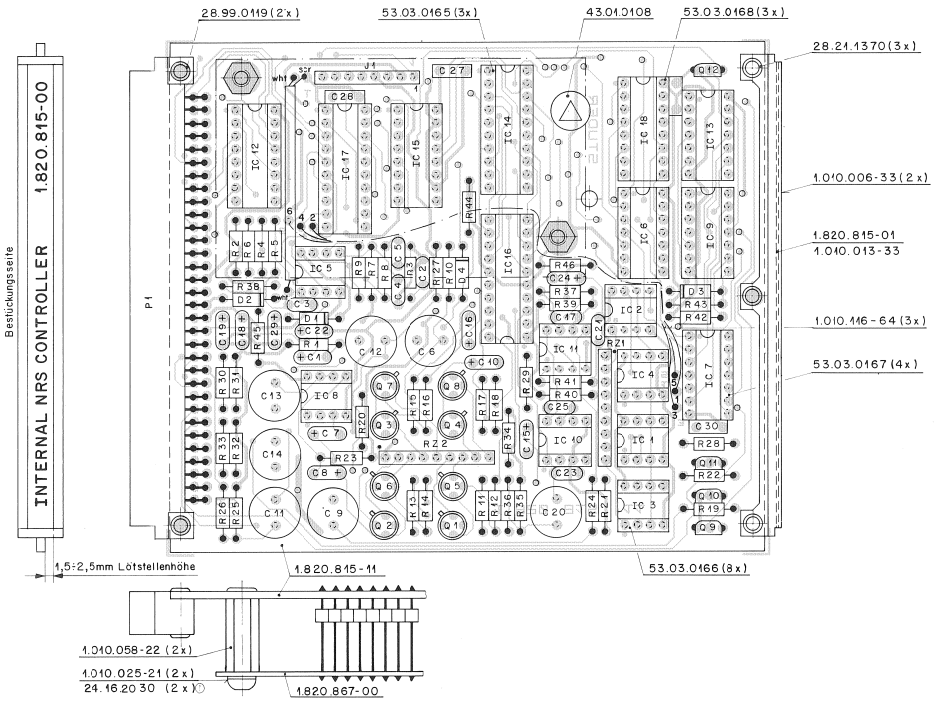

IND.	POS.NO.	PART NO.	VALUE	SPECIFICATIONS / EQUIVALENT	MANUF.
	A.....1	1.820.867.00		Metering board	St
	C.....1	59.26.2100	10 uF	20%, 16 V, Sal	
	C.....2	59.32.4471	470 pF	20%, 50 V, Cer	
	C.....3	59.32.4471	470 pF	20%, 50 V, Cer	
	C.....4	59.34.2220	22 pF	5%, Cer	
	C.....5	59.34.2220	22 pF	5%, Cer	
	C.....6	59.99.0401	47 uF	20%, 16 V, El, bipolar	
	C.....7	59.26.2100	10 uF	20%, 16 V, Sal	
	C.....8	59.26.2100	10 uF	20%, 16 V, Sal	
	C.....9	59.99.0401	47 uF	20%, 16 V, El, bipolar	
	C.....10	59.26.2100	10 uF	20%, 16 V, Sal	
	C.....11	59.99.0401	47 uF	20%, 16 V, El, bipolar	
	C.....12	59.99.0401	47 uF	20%, 16 V, El, bipolar	
	C.....13	59.99.0401	47 uF	20%, 16 V, El, bipolar	
	C.....14	59.99.0401	47 uF	20%, 16 V, El, bipolar	
	C.....15	59.26.2100	10 uF	20%, 16 V, Sal	
	C.....16	59.26.2100	10 uF	20%, 16 V, Sal	
	C.....17	59.34.2220	22 pF	5%, Cer	
	C.....18	59.26.2100	10 uF	20%, 16 V, Sal	
	C.....19	59.26.2100	10 uF	20%, 16 V, Sal	
	C.....20	59.99.0401	47 uF	20%, 16 V, El, bipolar	
	C.....21	59.34.2220	22 pF	5%, Cer	
	C.....22	59.26.2100	10 uF	20%, 16 V, Sal	
	C.....23	59.34.2220	22 pF	5%, Cer	
	C.....24	59.26.2100	10 uF	20%, 16 V, Sal	
	C.....25	59.34.2220	22 pF	5%, Cer	
	C.....26	59.06.0683	68 nF	10%, PETP	
	C.....27	59.06.0683	68 nF	10%, PETP	
	C.....28	59.06.0683	68 nF	10%, PETP	
	C.....29	59.26.2100	10 uF	20%, 16 V, Sal	
	C.....30	59.06.0683	68 nF	10%, PETP	
	D.....1	53.04.0512	1N5818	1N5819	St
	D.....2	53.04.0512	1N5818	1N5819	St
	D.....3	53.04.0125	1N4448		ITT/Ph,Se,TI
	D.....4	53.04.0125	1N4448		ITT/Ph,Se,TI

IND.	POS.NO.	PART NO.	VALUE	SPECIFICATIONS / EQUIVALENT	MANUF.
	IC....1	50.05.0283	LM 393 N	...P, ...DP	Tho/TI/NS
	IC....2	50.05.0283	LM 393 N	...P, ...DP	Tho/TI/NS
	IC....3	50.05.0283	LM 393 N	...P, ...DP	Tho/TI/NS
	IC....4	50.05.0283	LM 393 N	...P, ...DP	Tho/TI/NS
	IC....5	50.09.0101	LF 353 N	TL 072CP	Tho/TI/NS
	IC....6	50.07.0006	4C14001BCP	CD4001BCN	Mot,NS,Ph,RCA,To
	IC....7	50.07.0012	4C14025BCP	CD4025BC	Mot,NS,Ph,RCA,To
	IC....8	50.09.0106	NE 5532AN	XR 5532AN	Ex,Ra,Sig
	IC....9	50.07.1011	4C14011BCP	HEF4011BCP	Mot,NS,Ph,RCA,SGS,SSS,To
	IC....10	50.09.0106	NE 5532AN	XR 5532AN	Ex,Ra,Sig
	IC....11	50.09.0106	NE 5532AN	XR 5532AN	Ex,Ra,Sig
	IC....12	50.07.0004	MC 14556B	CD 4556BCP	Mot,Ph,NS,RCA,Tho
	IC....13	50.07.1069	4EF4069UBP	CD 4069 UBE	RCA,NS,Ph,To,Mot,SGS
	IC....14	50.07.0003	MM74C374N		NS
	IC....15	50.07.0512	MC 14512E	HEF 4512BP	Mot,NS,Ph,RCA,Tho
	IC....16	50.07.0026	AD 7528JN	MF 7528JN	ADI,MPS
	IC....17	50.07.0003	MM74C374N		NS
	IC....18	50.07.0004	MC 14556B	CD 4556BCP	Mot,NS,Ph,RCA,Tho
	J.....1	53.03.0218		8 pieces	
	Q.....1	50.11.0106	SD 214-DE	BSD 214	Ph,Sie
	Q.....2	50.11.0106	SD 214-DE	BSD 214	Ph,Sie
	Q.....3	50.11.0106	SD 214-DE	BSD 214	Ph,Sie
	Q.....4	50.11.0106	SD 214-DE	BSD 214	Ph,Sie
	Q.....5	50.11.0106	SD 214-DE	BSD 214	Ph,Sie
	Q.....6	50.11.0106	SD 214-DE	BSD 214	Ph,Sie
	Q.....7	50.11.0106	SD 214-DE	BSD 214	Ph,Sie
	Q.....8	50.11.0106	SD 214-DE	BSD 214	Ph,Sie
	Q.....9	50.03.1505	VN 0808 M	ZVN 0108 A	Fe,Sil
	Q.....10	50.03.1505	VN 0808 M	ZVN 0108 A	Fe,Sil
	Q.....11	50.03.1505	VN 0808 M	ZVN 0108 A	Fe,Sil
	Q.....12	50.03.1505	VN 0808 M	ZVN 0108 A	Fe,Sil
	R.....1	57.11.4473	47 kOhm	2%	
	R.....2	57.11.4103	10 kOhm	2%	
	R.....3	57.11.4103	10 kOhm	2%	

IND.	POS.NO.	PART NO.	VALUE	SPECIFICATIONS / EQUIVALENT	MANUF.
	R.....4	57.11.4103	10 kOhm	2%	
	R.....5	57.11.4103	10 kOhm	2%	
	R.....6	57.11.4103	10 kOhm	2%	
	R.....7	57.11.4103	10 kOhm	2%	
	R.....8	57.11.4103	10 kOhm	2%	
	R.....9	57.11.4103	10 kOhm	2%	
	R....10	57.11.4473	47 kOhm	2%	
	R....11	57.11.4105	1 MOhm	2%	
	R....12	57.11.4105	1 MOhm	2%	
	R....13	57.11.4105	1 MOhm	2%	
	R....14	57.11.4105	1 MOhm	2%	
	R....15	57.11.4105	1 MOhm	2%	
	R....16	57.11.4105	1 MOhm	2%	
	R....17	57.11.4105	1 MOhm	2%	
	R....18	57.11.4105	1 MOhm	2%	
	R....19	57.11.4330	33 Ohm	2%	
	R....20	57.11.4473	47 kOhm	2%	
	R....21	57.11.4473	47 kOhm	2%	
	R....22	57.11.4330	33 Ohm	2%	
	R....23	57.11.4473	47 kOhm	2%	
	R....24	57.11.4470	47 Ohm	2%	
	R....25	57.11.4473	47 kOhm	2%	
	R....26	57.11.4470	47 Ohm	2%	
	R....27	57.11.4473	47 kOhm	2%	
	R....28	57.11.4331	330 Ohm	2%	
	R....29	57.11.4473	47 kOhm	2%	
	R....30	57.11.4470	47 Ohm	2%	
	R....31	57.11.4473	47 kOhm	2%	
	R....32	57.11.4473	47 kOhm	2%	
	R....33	57.11.4470	47 Ohm	2%	
	R....34	57.11.4473	47 kOhm	2%	
	R....35	57.11.4473	47 kOhm	2%	
	R....36	57.11.4470	47 Ohm	2%	
	R....37	57.11.3163	16 kOhm	1%	
	R....38	57.11.4102	1 kOhm	2%	
	R....39	57.11.3113	11 kOhm	2%	
	R....40	57.11.3163	16 kOhm	2%	

IND.	POS.NO.	PART NO.	VALUE	SPECIFICATIONS / EQUIVALENT	MANUF.
	R....41	57.11.3362	3.6 kOhm	1%	
	R....42	57.11.4223	22 kOhm	2%	
	R....43	57.11.4223	22 kOhm	2%	
	R....44	57.11.4223	22 kOhm	2%	
	R....45	57.11.4479	4.7 Ohm	2%	
	R....46	57.11.4000		Wire bridge or 0 Ohm resistor	
(00)	RZ....1	57.88.4332		8 * 3.3 kOhm, see note 2	
(01)	RZ....1	57.88.4104		8 * 100 kOhm, see note 1	
(01)	RZ....2	57.88.4103		8 * 10 kOhm, see note 2	

IND.	POS.NO.	PART NO.	VALUE	SPECIFICATIONS / EQUIVALENT	MANUF.

(01) 06.01.88 Reduction of power losses.

Note 1 - Resistor Network: 8 * 100 kOhm

Allen Bradley nr.	709 A 104	or 909 A 104
Beckmann nr.	L-09-1-R 100 k	
Bourns nr.	4609 M-101 - 104	or 4609 X-101 - 104
Dale nr.	CSC 09 A 01 - 104 G	
Sprague nr.	256C J 104 X2 PD	
Tama nr.	MBG C 09 X 100 kOhm G	
Vitrox nr.	PSE 100 kOhm 2%	or RBB 100 kOhm 2%

Note 2 - Resistor Network: 8 * 10 kOhm

Allen Bradley Nr.	909 A 103
Beckmann Nr.	L-09-1-R 10K
Bourns Nr.	4609 M-101 - 103
Dale Nr.	CSC 09 A 01 - 103 G
Sprague Nr.	256C J 103 X2 PD
Tama Nr.	MBG C 09 X 10 KOhm G
Vitrox Nr.	PSE 10 kOhm 2%

Cer=Ceramic, El=Electrolytic, Sal=Solid Aluminium, PP=Polypropylen, PETP=Polyesterfilm

MANUFACTURER: ADI=Analog Divices Inc., Ex=Exar, Fe=Ferranti, ITT=ITT Internetall, Mot=Motorola, MPS=Micro Power Systems, NS=National Semiconductors, Ph=Philips, Ra=Raytheon, RCA=RCA Corp. of America, Sse=Sescosem, SGS=SGS/Ates, Sie=Siemens, Sig=Signetics, Sil=Silex, SSS=Solid State Scientific, St=Studer, Tho=Thomsen-CSF, TI=Texas Instruments, To=Toshiba.

ORIG 87/03/18 (01) 88/01/06

BLOCK DIAGRAM
INTERNAL CONTROLLER SR/A 1.820.824

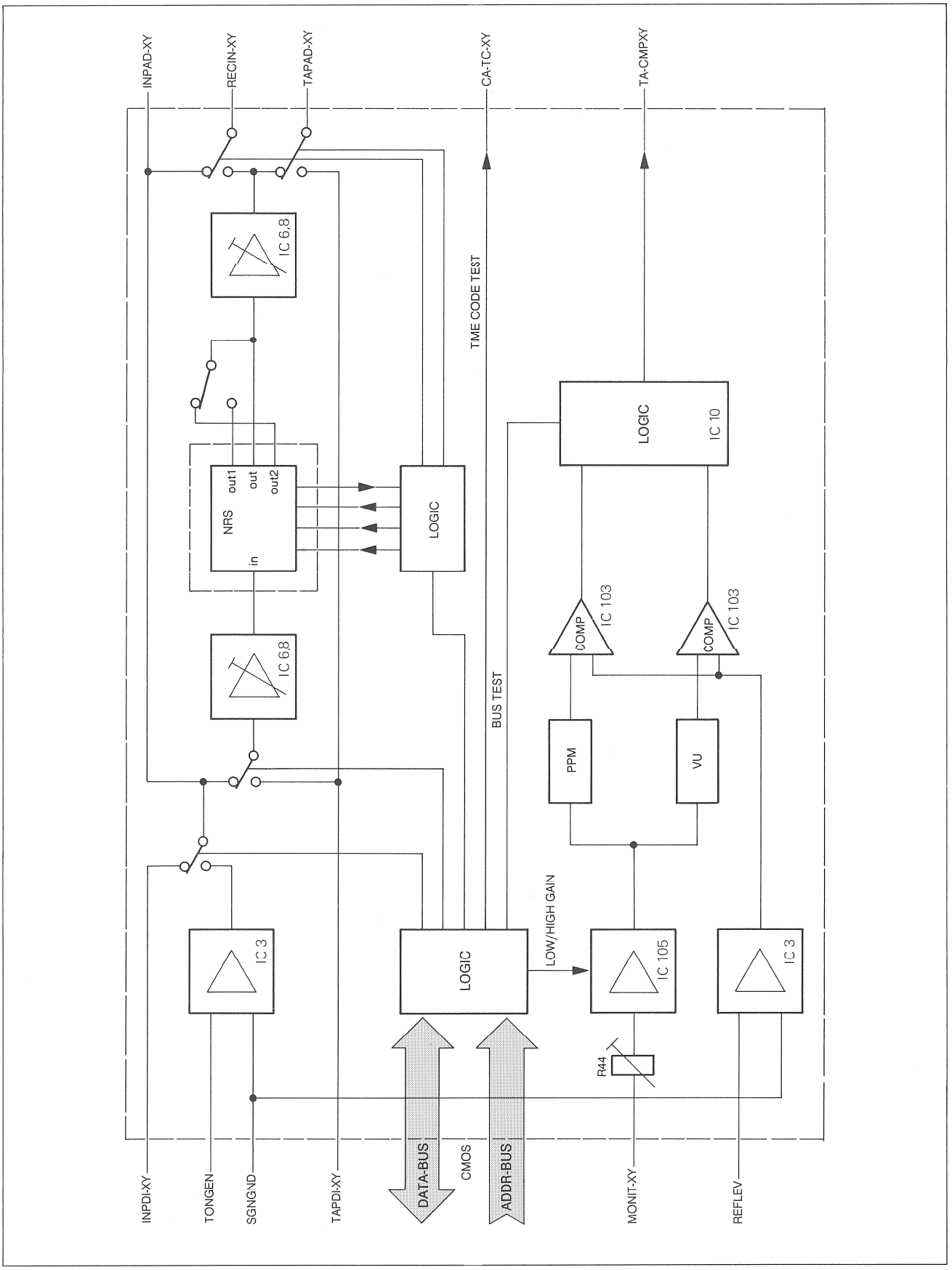

INTERNAL CONTROLLER SR/A 1.820.824.00

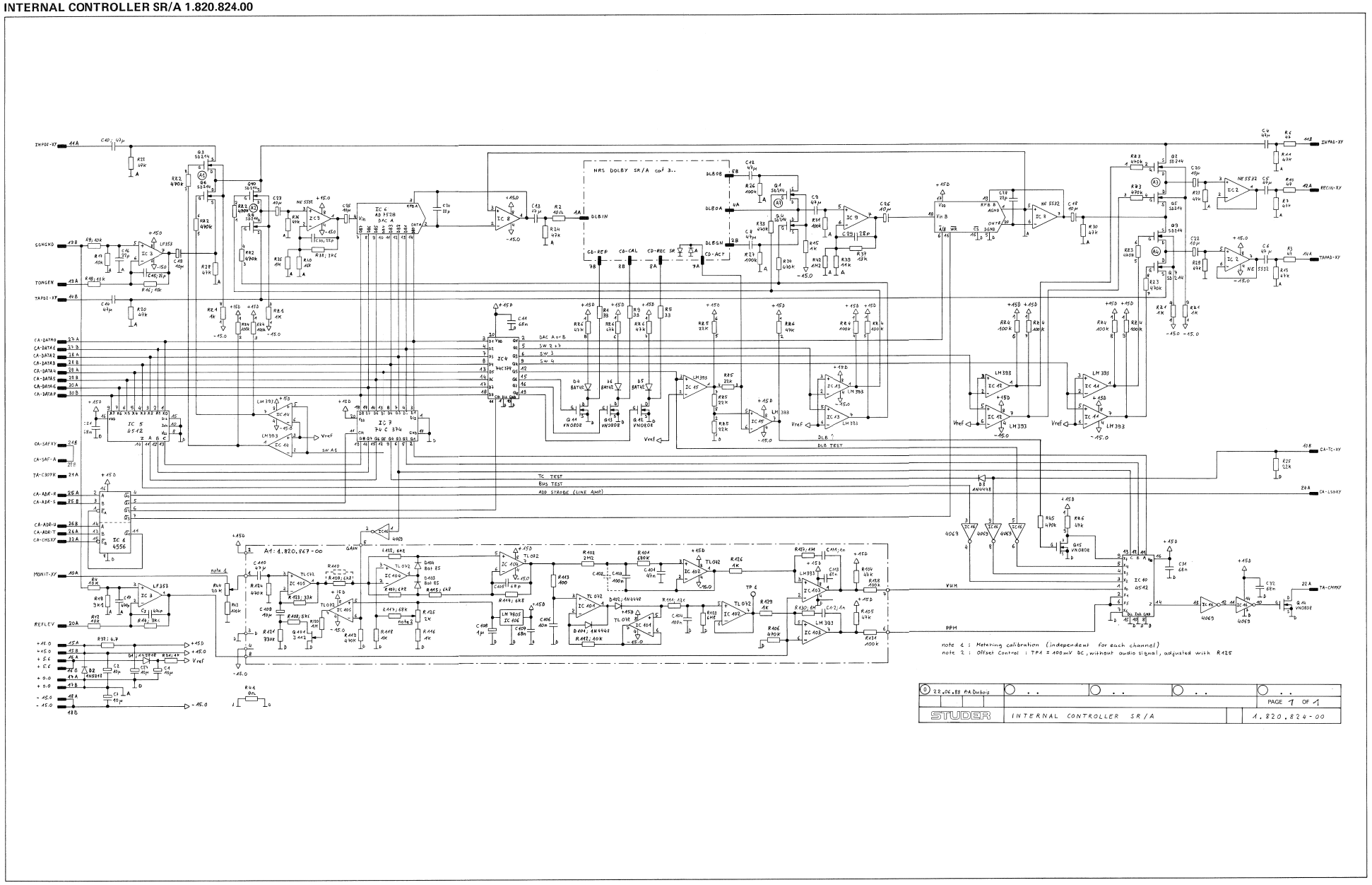

INTERNAL CONTROLLER SR/A 1.820.824.00

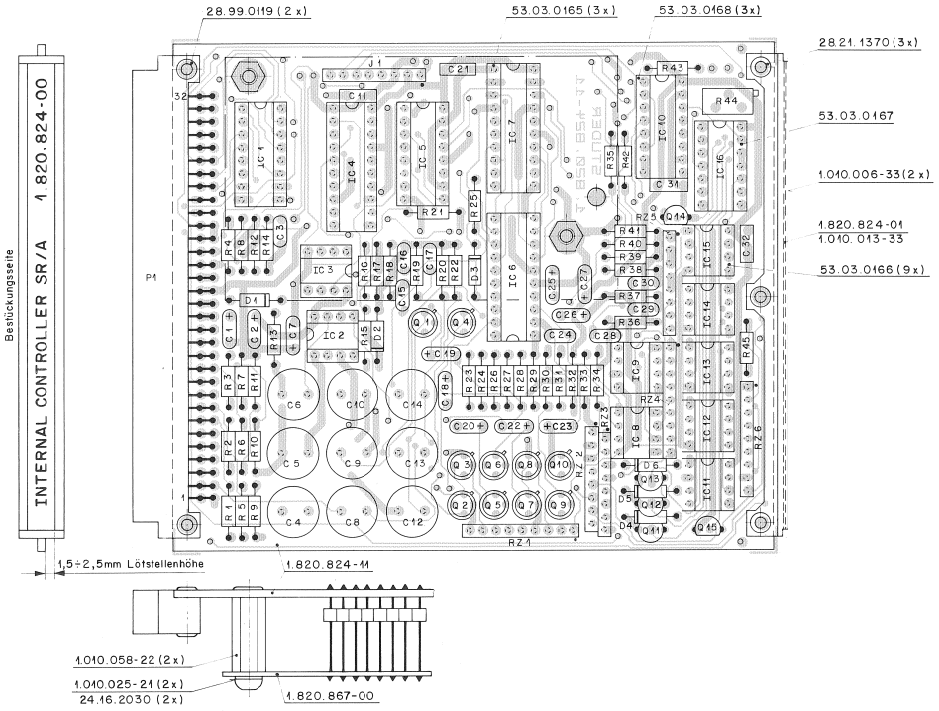

IND.	POS.NO.	PART NO.	VALUE	SPECIFICATIONS / EQUIVALENT	MANUF.
A.....	1	1.820.867.00		Metering board	St
C.....	1	59.26.2180	10 uF	20%. 16 V+ Sal	Ph
C.....	2	59.26.2180	10 uF	20%. 16 V+ Sal	Ph
C.....	3	59.32.4471	470 pF	20%. 50 V+ Cer	
C.....	4	59.99.0941	47 uF	20%. 16 V+ ElBip	
C.....	5	59.99.0941	47 uF	20%. 16 V+ ElBip	
C.....	6	59.99.0941	47 uF	20%. 16 V+ ElBip	
C.....	7	59.26.2180	10 uF	20%. 16 V+ Sal	Ph
C.....	8	59.99.0941	47 uF	20%. 16 V+ ElBip	
C.....	9	59.99.0941	47 uF	20%. 16 V+ ElBip	
C.....	10	59.99.0941	47 uF	20%. 16 V+ ElBip	
C.....	11	59.26.0643	68 nF	10%. PETP	
C.....	12	59.99.0941	47 uF	20%. 16 V+ ElBip	
C.....	13	59.99.0941	47 uF	20%. 16 V+ ElBip	
C.....	14	59.99.0941	47 uF	20%. 16 V+ ElBip	
C.....	15	59.34.2220	22 pF	5%. Cer	
C.....	16	59.34.2220	22 pF	5%. Cer	
C.....	17	59.32.4471	470 pF	20%. 50 V+ Cer	
C.....	18	59.26.2180	10 uF	20%. 16 V+ Sal	Ph
C.....	19	59.26.2180	10 uF	20%. 16 V+ Sal	Ph
C.....	20	59.26.2180	10 uF	20%. 16 V+ Sal	Ph
C.....	21	59.26.0643	68 nF	10%. PETP	
C.....	22	59.26.2180	10 uF	20%. 16 V+ Sal	Ph
C.....	23	59.26.2180	10 uF	20%. 16 V+ Sal	Ph
C.....	24	59.34.2220	22 pF	5%. Cer	
C.....	25	59.26.2180	10 uF	20%. 16 V+ Sal	Ph
C.....	26	59.26.2180	10 uF	20%. 16 V+ Sal	Ph
C.....	27	59.26.2180	10 uF	20%. 16 V+ Sal	Ph
C.....	28	59.34.2220	22 pF	5%. Cer	
C.....	29	59.34.2220	22 pF	5%. Cer	
C.....	30	59.34.2220	22 pF	5%. Cer	
C.....	31	59.26.0643	68 nF	10%. PETP	
C.....	32	59.26.0643	68 nF	10%. PETP	
D.....	1	50.34.0512	1N5818	1N5819	Mot
D.....	2	50.34.0512	1N5818	1N5819	Mot

IND.	POS.NO.	PART NO.	VALUE	SPECIFICATIONS / EQUIVALENT	MANUF.
D.....	3	50.34.0125	1N4448		ITT+Ph+Sas+TI
D.....	4	50.34.0127	BAT 85	BAT 42+ BAS 40-02	Sie+Ph+Tho
D.....	5	50.34.0127	BAT 85	BAT 42+ BAS 40-02	Sie+Ph+Tho
D.....	6	50.34.0127	BAT 85	BAT 42+ BAS 40-02	Sie+Ph+Tho
IC.....	1	50.07.0004	MC 14556B	CD 4556BCP	Mot+Ph+NS+RCA+Tho
IC.....	2	50.09.0106	NE 5532AN	KA 5532AN	Ex+Ra+Sig
IC.....	3	50.39.0101	LF 353 N	TL 072CP	Tho+TI+NS
IC.....	4	50.07.0003	MM74C374		NS
IC.....	5	50.37.0512	MC 14512B	HEF 4512BP	Mot+NS+Ph+RCA+Tho
IC.....	6	50.34.0126	AD 7528JN	MP 7528JN	ADI+MPS
IC.....	7	50.07.0003	MM74C374		NS
IC.....	8	50.09.0106	NE 5532AN	KA 5532AN	Ex+Ra+Sig
IC.....	9	50.09.0106	NE 5532AN	KA 5532AN	Ex+Ra+Sig
IC.....	10	50.37.0512	MC 14512B	HEF 4512BP	Mot+NS+Ph+RCA+Tho
IC.....	11	50.35.0283	LM 393 N	...uP. ...uP	Tho+TI+NS
IC.....	12	50.35.0283	LM 393 N	...uP. ...uP	Tho+TI+NS
IC.....	13	50.35.0283	LM 393 N	...uP. ...uP	Tho+TI+NS
IC.....	14	50.35.0283	LM 393 N	...uP. ...uP	Tho+TI+NS
IC.....	15	50.35.0283	LM 393 N	...uP. ...uP	Tho+TI+NS
IC.....	16	50.37.1069	HcF4069UBF	CD 4069 UBE	RCA+NS+Ph+Tho+Mot+SGS
J.....	1	33.33.0218		9 pieces	
P.....	1		see note 1		
Q.....	1	50.11.0106	SD 214-DE	BSC 214	Ph+Sie
Q.....	2	50.11.0106	SD 214-DE	BSC 214	Ph+Sie
Q.....	3	50.11.0106	SD 214-DE	BSC 214	Ph+Sie
Q.....	4	50.11.0106	SD 214-DE	BSC 214	Ph+Sie
Q.....	5	50.11.0106	SD 214-DE	BSC 214	Ph+Sie
Q.....	6	50.11.0106	SD 214-DE	BSC 214	Ph+Sie
Q.....	7	50.11.0106	SD 214-DE	BSC 214	Ph+Sie
Q.....	8	50.11.0106	SD 214-DE	BSC 214	Ph+Sie
Q.....	9	50.11.0106	SD 214-DE	BSC 214	Ph+Sie
Q.....	10	50.11.0106	SD 214-DE	BSC 214	Ph+Sie
Q.....	11	50.33.1505	VN 0808 M	ZVN 0108 A	Fe+Sil

IND.	POS.NO.	PART NO.	VALUE	SPECIFICATIONS / EQUIVALENT	MANUF.
Q.....	12	50.03.1505	VN 0808 M	ZVN 0108 A	Fe+Sil
Q.....	13	50.03.1505	VN 0808 M	ZVN 0108 A	Fe+Sil
Q.....	14	50.03.1505	VN 0808 M	ZVN 0108 A	Fe+Sil
Q.....	15	50.03.1505	VN 0808 M	ZVN 0108 A	Fe+Sil
R.....	1	57.11.3330	33 Ohm	2%	
R.....	2	57.11.3120	10 Ohm	2%	
R.....	3	57.11.3470	47 Ohm	2%	
R.....	4	57.11.3103	10 kOhm	1%	
R.....	5	57.11.3330	33 Ohm	2%	
R.....	6	57.11.3470	47 Ohm	2%	
R.....	7	57.11.3473	47 kOhm	2%	
R.....	8	57.11.3103	10 kOhm	1%	
R.....	9	57.11.3330	33 Ohm	2%	
R.....	10	57.11.3470	47 Ohm	2%	
R.....	11	57.11.3473	47 kOhm	2%	
R.....	12	57.11.3103	10 kOhm	1%	
R.....	13	57.11.3473	47 kOhm	2%	
R.....	14	57.11.3912	9.1 kOhm	2%	
R.....	15	57.11.3102	1 kOhm	2%	
R.....	16	57.11.3103	10 kOhm	1%	
R.....	17	57.11.3103	10 kOhm	1%	
R.....	18	57.11.3103	10 kOhm	1%	
R.....	19	57.11.3912	9.1 kOhm	1%	
R.....	20	57.11.3473	47 kOhm	2%	
R.....	21	57.11.3102	1 kOhm	2%	
R.....	22	57.11.3473	47 kOhm	2%	
R.....	23	57.11.3473	47 kOhm	2%	
R.....	24	57.11.3473	47 kOhm	2%	
R.....	25	57.11.3223	22 kOhm	2%	
R.....	26	57.11.3104	100 kOhm	2%	
R.....	27	57.11.3104	100 kOhm	2%	
R.....	28	57.11.3473	47 kOhm	2%	
R.....	29	57.11.3473	47 kOhm	2%	
R.....	30	57.11.3473	47 kOhm	2%	
R.....	31	57.11.3104	100 kOhm	2%	
R.....	32	57.11.3479	4.7 Ohm	2%	

IND.	POS.NO.	PART NO.	VALUE	SPECIFICATIONS / EQUIVALENT	MANUF.
R.....	33	57.11.3474	470 kOhm	2%	
R.....	34	57.11.3474	470 kOhm	2%	
R.....	35	57.11.3105	1 MOhm	2%	
R.....	36	57.11.3473	47 kOhm	2%	
R.....	37	57.11.3133	13 kOhm	1%	
R.....	38	57.11.3752	7.5 kOhm	1%	
R.....	39	57.11.3113	11 kOhm	1%	
R.....	40	57.11.3133	13 kOhm	1%	
R.....	41	57.11.4003		wire bridge or 0 Ohm resistor	
R.....	42	57.11.3125	1.2 MOhm	2%	
R.....	43	57.11.3104	100 kOhm	2%	
R.....	44	28.09.0203	see note 2		
R.....	45	57.11.3474	470 kOhm	2%	
RZ.....	1	57.88.4102		8 R 1 kOhm, see note 3	
RZ.....	2	57.88.2474		4 R 470 kOhm, see note 4	
RZ.....	3	57.88.2474		4 R 470 kOhm, see note 4	
RZ.....	4	57.88.4104		8 R 100 kOhm, see note 5	
RZ.....	5	57.88.2223		4 R 22 kOhm, see note 6	
RZ.....	6	57.88.4473		8 R 47 kOhm, see note 7	

IND.	POS.NO.	PART NO.	VALUE	SPECIFICATIONS / EQUIVALENT	MANUF.
				Note 1 - Connector 2 x 32 contacts.	
				Erni nr. 9724.533.406	
				Souriau nr. 8a09.64x51x13.765.000 E1	
				Harting nr. 0902 164 6921	
				Note 2 - Potentiometer 20 kOhm.	
				Bourns nr. 3296 Z - 1 - 203	
				Cantelec nr. 183 XZ 203	
				Murata nr. PVT 3105 Z - 1 - 203	
				Spectrol nr. 64 Z 203 T 00U	
				Note 3 - Resistor Network: 8 R 1 kOhm	
				Allen Bradley nr. 709 A 102, 909 A 102	
				Beckmann nr. L-09-1-R 1-0K	
				Bourns nr. 4609 M-101 - 102, 4609 X-101 - 102	
				Dale nr. CSC 09 A 01 - 102 G	
				Sprague nr. 256C Z 102 K2 PU	
				Tama nr. M6G C 09 K 100 Ohm G	
				Vitrom nr. P9E 1.0 kOhm 2%, R88 1.0 kOhm 2%	
				Note 4 - Resistor Network: 4 R 470 kOhm	
				Allen Bradley nr. 708 B 474, 908 B 474	
				Beckmann nr. L-08-3-R 470K	
				Bourns nr. 4608 M-102 - 474, 4608 X-102 - 474	
				Dale nr. CSC 08 A 03 - 474 G	
				Tama nr. M6G C 08 K 470 kOhm G	
				Vitrom nr. P8W 470 kOhm 2%, C44 470 kOhm 2%	
				Note 5 - Resistor Network: 8 R 100 kOhm	
				Allen Bradley nr. 709 A 104, 909 A 104	
				Beckmann nr. L-09-1-R 100 K	
				Bourns nr. 4609 M-101 - 104, 4609 X-101 - 104	
				Dale nr. CSC 09 A 01 - 104 G	
				Sprague nr. 256C Z 104 K2 PU	
				Tama nr. M6G C 09 K 100 kOhm G	
				Vitrom nr. P9E 100 kOhm 2%, R86 100 kOhm 2%	

IND.	POS.NO.	PART NO.	VALUE	SPECIFICATIONS / EQUIVALENT	MANUF.
				Note 6 - Resistor Network: 4 R 22 kOhm	
				Allen Bradley nr. 708 B 223, 908 B 223	
				Beckmann nr. L-08-3-R 22K	
				Bourns nr. 4608 M-102 - 223, 4608 X-102 - 223	
				Dale nr. CSC 08 A 03 - 223 G	
				Sprague nr. 256 CH 223 K2 SA	
				Tama nr. M6G C 08 K 22 kOhm G	
				Vitrom nr. P8W 22 kOhm 2%, C44 22 kOhm 2%	
				Note 7 - Resistor Network: 8 R 47 kOhm	
				Allen Bradley nr. 709 A 473, 909 A 473	
				Beckmann nr. L-09-1-R 47K	
				Bourns nr. 4609 M-101 - 473, 4609 X-101 - 473	
				Dale nr. CSC 09 A 01 - 473 G	
				Sprague nr. 256C Z 473 K2 PU	
				Tama nr. M6G C 09 K 47 KOhm G	
				Vitrom nr. P9E 47 kOhm 2%, R88 47 kOhm 2%	

Cer=Ceramic, El=Electrolytic, SIBip=Electrolytic bipolar, Sal=Solid Aluminium
PP=Polypropylen, PETP=Polyesterfilm

MANUFACTURER: ADI=Analog Devices Inc., Ex=Exar, Fe=Ferranti,
ITT=ITT Intermetall, Mot=Motorola, MPS=Micro Power Systems,
N=National Semiconductors, Ph=Philips, Ra=Raytheon,
RCA=RCA Corp. of America, Sas=Sascosem, SGS=SGS/Atmel,
Sie=Siemens, Sig=Signetics, Sil=Siliec, St=Studer,
Tho=Thomson-CSF, TI=Texas Instruments, To=Toshiba.

DRIG 88/04/12

METERING BOARD 1.820.867.00

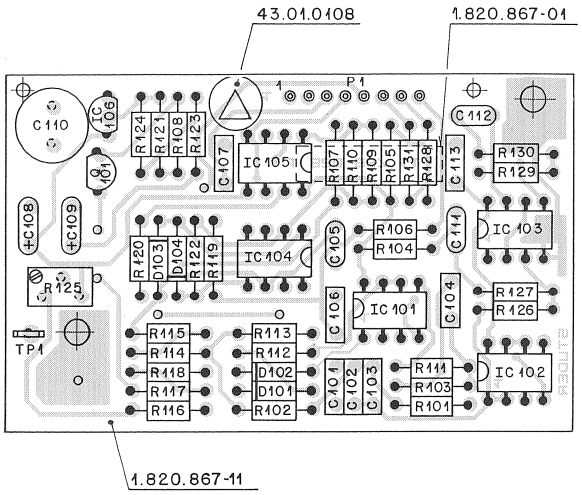

IND.	POS.NO.	PART NO.	VALUE	SPECIFICATIONS / EQUIVALENT	MANUF.
	C...101	59.06.5473	47 nF	5% 63 V, PETP	
	C...102		not used		
	C...103	59.06.5104	100 nF	5% 63 V, PETP	
	C...104	59.06.5104	100 nF	5% 63 V, PETP	
	C...105	59.34.4680	68 pF	5% N750 Cer	
	C...106	59.06.0103	10 nF	5% 63 V, PETP	
	C...107	59.06.0683	68 nF	10% 63 V, PETP	
	C...108	59.26.9109	1 uF	20% 40 V, Sal	
	C...109	59.26.2100	10 uF	20% 16 V, Sal	
	C...110	59.99.0401	47 uF	20% 16 V, El, bipolar	
	C...111	59.06.0102	1 nF	5% 63 V, PETP	
	C...112	59.06.0102	1 nF	5% 63 V, PETP	
	C...113	59.06.0683	68 nF	10% 63 V, PETP	
	D...101	50.04.0125	1N 4448		Fc,ITT,Ph,Ses,Tf
	D...102	50.04.0125	1N 4448		Fc,ITT,Ph,Ses,Tf
	D...103	50.04.0127	BAT 42	BAT 85, BAS 40-02	Ph,Sie,Tho
	D...104	50.04.0127	BAT 42	BAT 85, BAS 40-02	Ph,Sie,Tho
	IC..101	50.09.0101	TL 072 CP	TDB 0353 DP	TI,Tho
	IC..102	50.09.0101	TL 072 CP	TDB 0353 DP	TI,Tho
	IC..103	50.05.0283	LM 393 N	LM 393 P, LM 393 DP	Ns,TI,Tho
	IC..104	50.09.0101	TL 072 CP	TDB 0353 DP	TI,Tho
	IC..105	50.09.0101	TL 072 CP	TDB 0353 DP	TI,Tho
	IC..106	50.10.0107	LM78L05ACZ	uA 78 L 05 AWC	NS,Fc
	TP..101	54.02.0320		Testpoint	
	Q...101	50.03.0350	J112		Mot
	R...101	57.11.4684	680 kOhm	2%	
	R...102	57.11.5225	2.2 MOhm	5%	
	R...103	57.11.5685	6.8 MOhm	5%	
	R...104	57.11.4473	47 kOhm	2%	
	R...105	57.11.4473	47 kOhm	2%	
	R...106	57.11.4474	470 kOhm	2%	
	R...107	57.11.4682	6.8 kOhm	2%	

IND.	POS.NO.	PART NO.	VALUE	SPECIFICATIONS / EQUIVALENT	MANUF.
	R...108	57.11.4562	5.6 kOhm	2%	
	R...109	57.11.4682	6.8 kOhm	2%	
	R...110		not used		
	R...111	57.11.3133	13 kOhm	1%	
	R...112	57.11.4103	10 kOhm	2%	
	R...113	57.11.4101	100 Ohm	2%	
	R...114	57.11.4682	6.8 kOhm	2%	
	R...115	57.11.4682	6.8 kOhm	2%	
	R...116	57.11.4102	1 kOhm	2%	
	R...117	57.11.4603	60 kOhm	2%	
	R...118	57.11.4102	1 kOhm	2%	
	R...119	57.11.4474	470 kOhm	2%	
	R...120	57.11.4105	1 MOhm	2%	
	R...121	57.11.4334	330 kOhm	2%	
	R...122	57.11.4682	6.8 kOhm	2%	
	R...123	57.11.4333	33 kOhm	2%	
	R...124	57.11.4474	470 kOhm	2%	
	R...125	58.05.1202	2 kOhm	see note 1	
	R...126	57.11.4102	1 kOhm	2%	
	R...127	57.11.4105	1 MOhm	2%	
	R...128	57.11.4104	100 kOhm	2%	
	R...129	57.11.4102	1 kOhm	2%	
	R...130	57.11.4105	1 MOhm	2%	
	R...131	57.11.4104	100 kOhm	2%	

IND.	POS.NO.	PART NO.	VALUE	SPECIFICATIONS / EQUIVALENT	MANUF.

Note 1 - Potentiometer, 2 kOhm: Bourns nr. 3296 Y - 1 - 202
Contelec nr. 183 WZ 202
Murata nr. POT 3105 Y - 1 - 202
Spectrol nr. 64 Y 202 T 000

Cer=Ceramic, ElBip=Electrolytic Bipolar, PETP=Polyesterfilm,
Sal=Solid aluminium.

MANUFACTURER: Fc=Fairchild, ITT=Intermetall, Mot=Motorola,
NS=National Semiconductors, Ph=Philips, Sie=Siemens,
Tf=Telefunken, Tho=Thomsen CSF,TI=Texas Instruments,
Ses=Sescosem.

ORIG 87/03/18

BASIS BOARD NRS SR/A 1.820.806.00

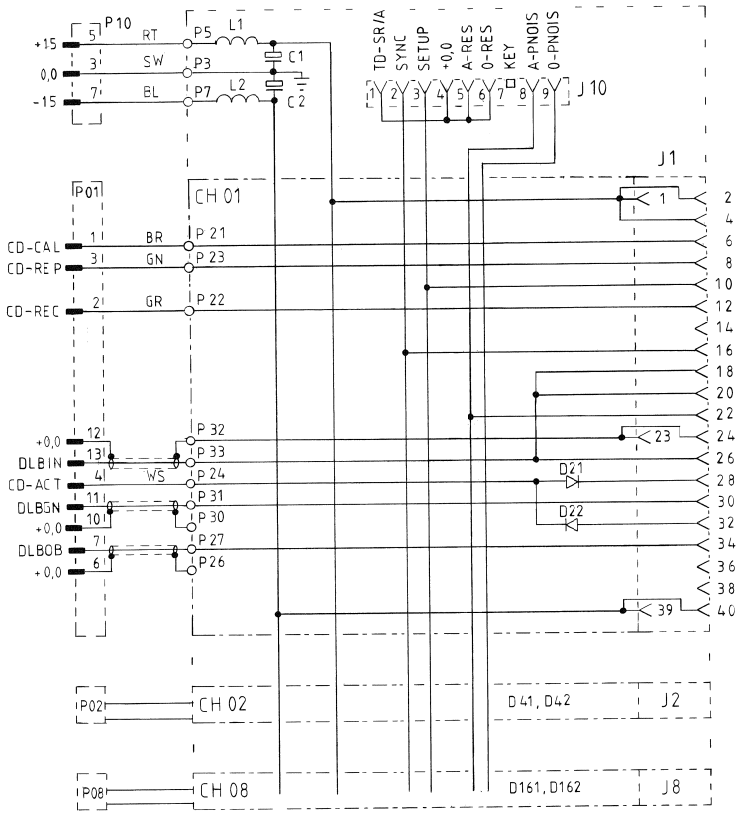

NOTE: Reference Numbers of Components are in groups of 20.
ex: Ch 1, D21; Ch2, D41; CH3, D61; etc.

IND.	POS.NO.	PART NO.	VALUE	SPECIFICATIONS / EQUIVALENT	MANUF.
C	1	59.22.5101	100 uF	-20%, 25V, El	
C	2	59.22.5101	100 uF	-20%, 25V, El	
D	21	50.04.0125	1N 4448		Fc,ITT,Phs,Ses,Tf
D	22	50.04.0125	1N 4448		Fc,ITT,Phs,Ses,Tf
D	41	50.04.0125	1N 4448		Fc,ITT,Phs,Ses,Tf
D	42	50.04.0125	1N 4448		Fc,ITT,Phs,Ses,Tf
D	61	50.04.0125	1N 4448		Fc,ITT,Phs,Ses,Tf
D	62	50.04.0125	1N 4448		Fc,ITT,Phs,Ses,Tf
D	81	50.04.0125	1N 4448		Fc,ITT,Phs,Ses,Tf
D	82	50.04.0125	1N 4448		Fc,ITT,Phs,Ses,Tf
D	101	50.04.0125	1N 4448		Fc,ITT,Phs,Ses,Tf
D	102	50.04.0125	1N 4448		Fc,ITT,Phs,Ses,Tf
D	121	50.04.0125	1N 4448		Fc,ITT,Phs,Ses,Tf
D	122	50.04.0125	1N 4448		Fc,ITT,Phs,Ses,Tf
D	141	50.04.0125	1N 4448		Fc,ITT,Phs,Ses,Tf
D	142	50.04.0125	1N 4448		Fc,ITT,Phs,Ses,Tf
D	161	50.04.0125	1N 4448		Fc,ITT,Phs,Ses,Tf
D	162	50.04.0125	1N 4448		Fc,ITT,Phs,Ses,Tf
J	1			see note 1	
J	2			see note 1	
J	3			see note 1	
J	4			see note 1	
J	5			see note 1	
J	7			see note 1	
J	8			see note 1	
J	10			see note 2	
L	1	62.03.0015	72 uH	Filter coil, Z At 0.068 Ohm	
L	2	62.03.0015	72 uH	Filter coil, Z At 0.068 Ohm	

Note 1 - Connector, 1 x 20 contacts, RM 2.54:
Studer nr. 54.99.0206
EGAC nr. 345-020-521-101

Note 2 - Connector, CIS 9 contacts:
Studer nr. 54.01.0212
AMP nr. 163.603-7

El=Electrolytic

MANUFACTURER: Fc=Fairchild, ITT=Intermetall, Phs=Philips, Ses=Sescosem, Sie=Siemens, Tf=Telefunken.

Okto 88/04/05

0 3.4.88 VF			
	A 820 MCH	PAGE 1 OF 1	
STUDER	Basis Board NRS SR/A	SC	1,820,806-00

BASIS BOARD NRS SR/A 1.820.806.00

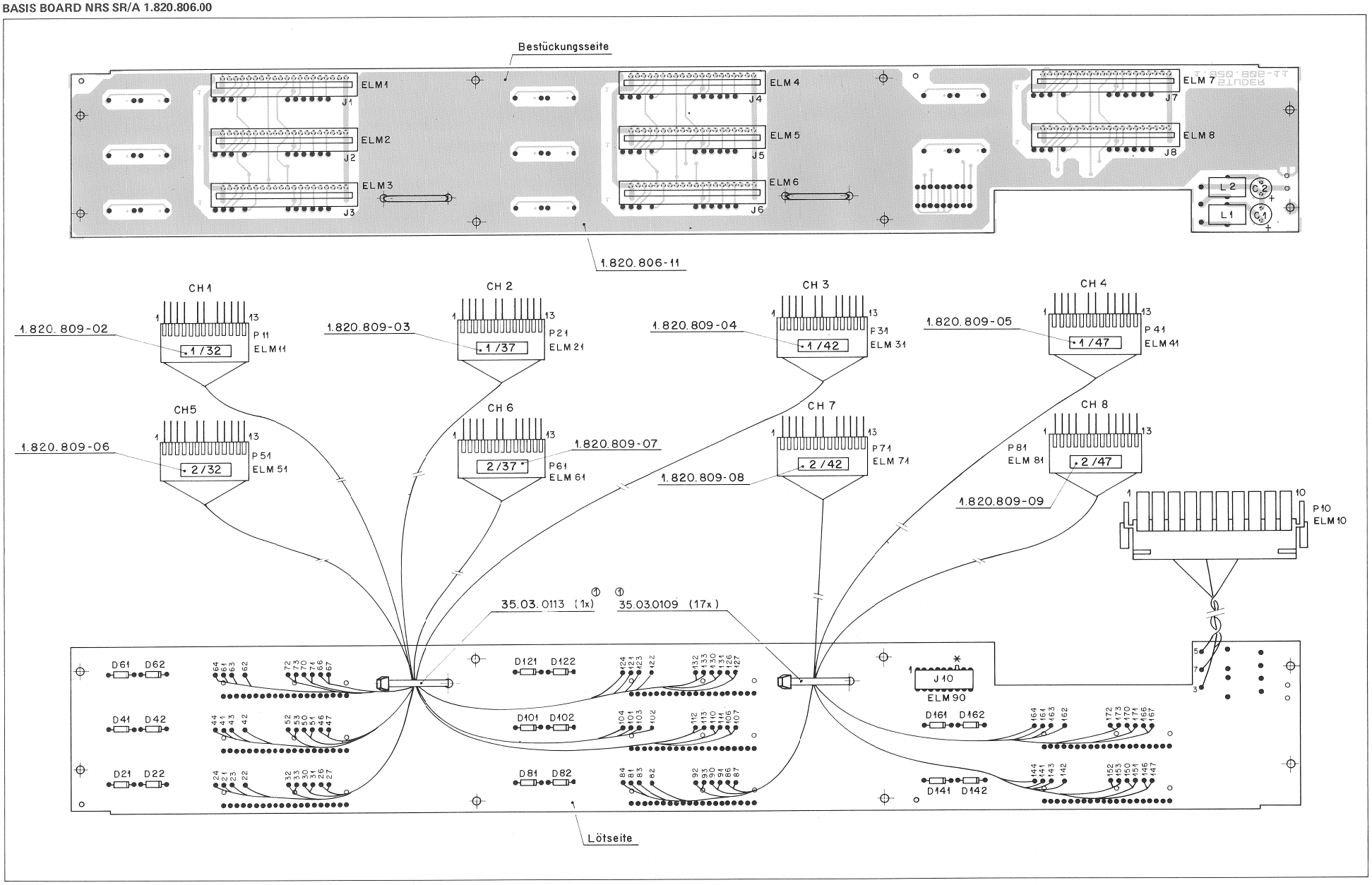

BASIS BOARD NRS CONTROLLER (OPTION) 1.820.807.00

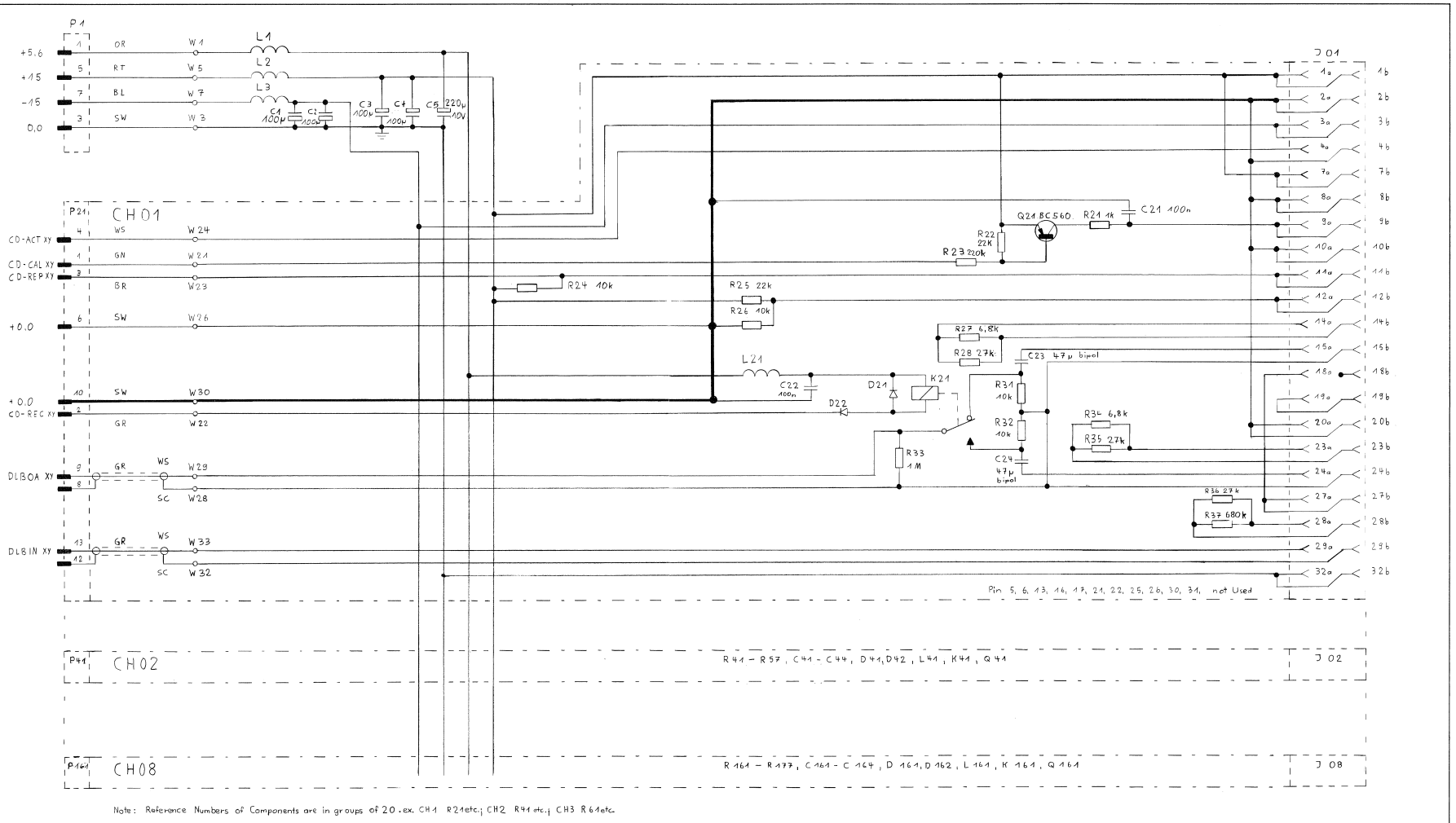

Note: Reference Numbers of Components are in groups of 20. ex. CH1 R21etc.; CH2 R41 etc.; CH3 R61etc.

0 23.12.87 V.Flück				
	A820 MCH			PAGE 1 OF 1
STUDER	Basis Board NRS C4E Option		SC	1,820,807,00

BASIS BOARD NRS CONTROLLER (OPTION) 1.820.807.00

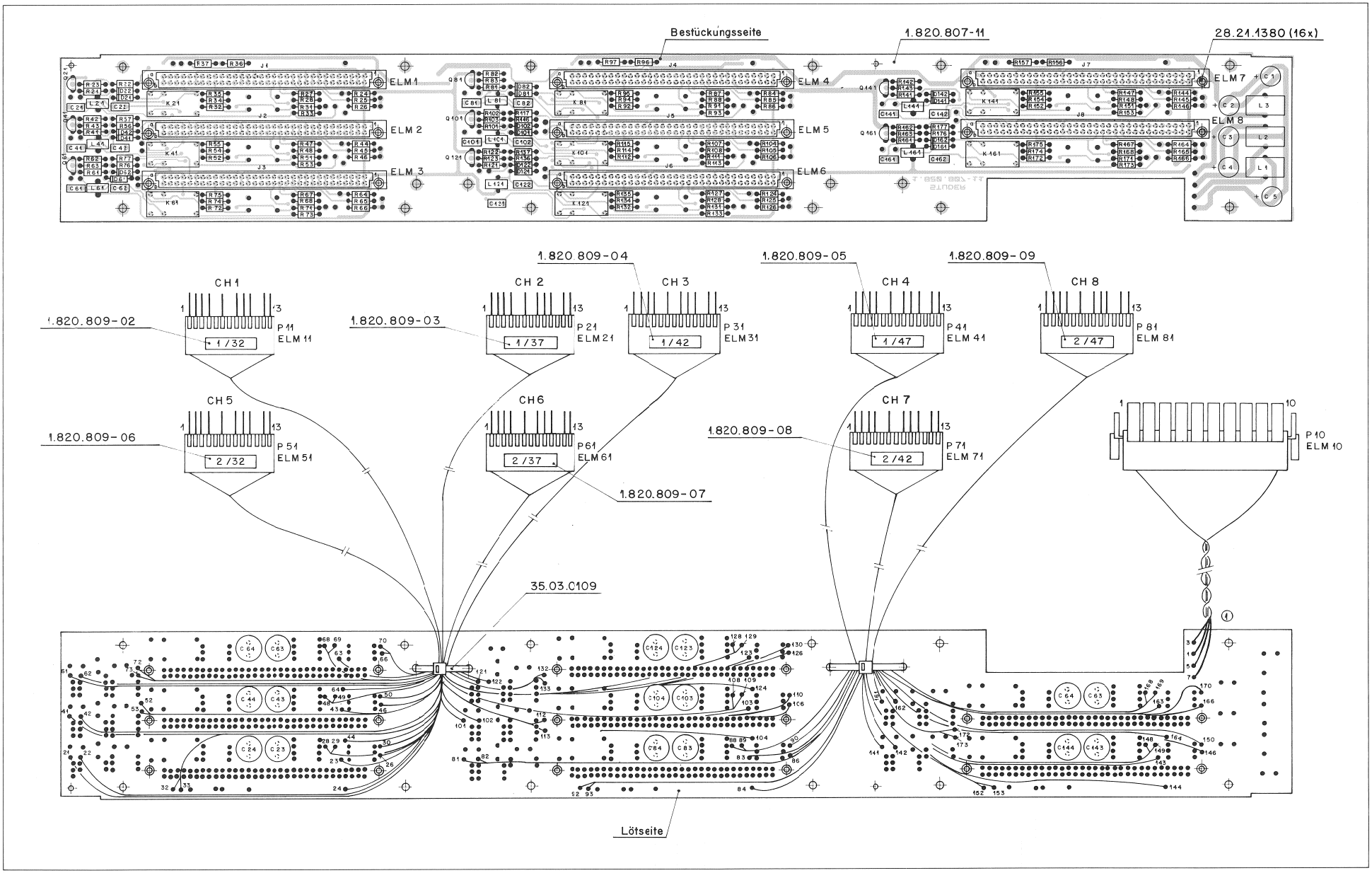

BASIS BOARD NRS CONTROLLER (OPTION) 1.820.807.00

IND.	POS.NO.	PART NO.	VALUE	SPECIFICATIONS / EQUIVALENT	MANUF.
	C.....1	59.22.5101	100 uF	-20%, 25V , El	
	C.....2	59.22.5101	100 uF	-20%, 25V , El	
	C.....3	59.22.5101	100 uF	-20%, 25V , El	
	C.....4	59.22.5101	100 uF	-20%, 25V , El	
	C.....5	59.22.3221	220 uF	-20%, 10V , El	
	C....21	59.06.0104	100 nF	10%, 63V , PETP	
	C....22	59.06.0104	100 nF	10%, 63V , PETP	
	C....23	59.99.0401	47 uF	-10%, 16V , ElBip	
	C....24	59.99.0401	47 uF	-10%, 16V , ElBip	
	C....41	59.06.0104	100 nF	10%, 63V , PETP	
	C....42	59.06.0104	100 nF	10%, 63V , PETP	
	C....43	59.99.0401	47 uF	-10%, 16V , ElBip	
	C....44	59.99.0401	47 uF	-10%, 16V , ElBip	
	C....61	59.06.0104	100 nF	10%, 63V , PETP	
	C....62	59.06.0104	100 nF	10%, 63V , PETP	
	C....63	59.99.0401	47 uF	-10%, 16V , ElBip	
	C....64	59.99.0401	47 uF	-10%, 16V , ElBip	
	C....81	59.06.0104	100 nF	10%, 63V , PETP	
	C....82	59.06.0104	100 nF	10%, 63V , PETP	
	C....83	59.99.0401	47 uF	-10%, 16V , ElBip	
	C....84	59.99.0401	47 uF	-10%, 16V , ElBip	
	C...101	59.06.0104	100 nF	10%, 63V , PETP	
	C...102	59.06.0104	100 nF	10%, 63V , PETP	
	C...103	59.99.0401	47 uF	-10%, 16V , ElBip	
	C...104	59.99.0401	47 uF	-10%, 16V , ElBip	
	C...121	59.06.0104	100 nF	10%, 63V , PETP	
	C...122	59.06.0104	100 nF	10%, 63V , PETP	
	C...123	59.99.0401	47 uF	-10%, 16V , ElBip	
	C...124	59.99.0401	47 uF	-10%, 16V , ElBip	
	C...141	59.06.0104	100 nF	10%, 63V , PETP	
	C...142	59.06.0104	100 nF	10%, 63V , PETP	
	C...143	59.99.0401	47 uF	-10%, 16V , ElBip	
	C...144	59.99.0401	47 uF	-10%, 16V , ElBip	
	C...161	59.06.0104	100 nF	10%, 63V , PETP	
	C...162	59.06.0104	100 nF	10%, 63V , PETP	
	C...163	59.99.0401	47 uF	-10%, 16V , ElBip	
	C...164	59.99.0401	47 uF	-10%, 16V , ElBip	

IND.	POS.NO.	PART NO.	VALUE	SPECIFICATIONS / EQUIVALENT	MANUF.
	D....21	50.04.0125	1N 4448		Fc,ITT,Ph,Ses,Tf
	D....22	50.04.0125	1N 4448		Fc,ITT,Ph,Ses,Tf
	D....41	50.04.0125	1N 4448		Fc,ITT,Ph,Ses,Tf
	D....42	50.04.0125	1N 4448		Fc,ITT,Ph,Ses,Tf
	D....61	50.04.0125	1N 4448		Fc,ITT,Ph,Ses,Tf
	D....62	50.04.0125	1N 4448		Fc,ITT,Ph,Ses,Tf
	D....81	50.04.0125	1N 4448		Fc,ITT,Ph,Ses,Tf
	D....82	50.04.0125	1N 4448		Fc,ITT,Ph,Ses,Tf
	D...101	50.04.0125	1N 4448		Fc,ITT,Ph,Ses,Tf
	D...102	50.04.0125	1N 4448		Fc,ITT,Ph,Ses,Tf
	D...121	50.04.0125	1N 4448		Fc,ITT,Ph,Ses,Tf
	D...122	50.04.0125	1N 4448		Fc,ITT,Ph,Ses,Tf
	D...141	50.04.0125	1N 4448		Fc,ITT,Ph,Ses,Tf
	D...142	50.04.0125	1N 4448		Fc,ITT,Ph,Ses,Tf
	D...161	50.04.0125	1N 4448		Fc,ITT,Ph,Ses,Tf
	D...162	50.04.0125	1N 4448		Fc,ITT,Ph,Ses,Tf
	J.....1			2 * 32 contacts, see note 1	
	J.....2			2 * 32 contacts, see note 1	
	J.....3			2 * 32 contacts, see note 1	
	J.....4			2 * 32 contacts, see note 1	
	J.....5			2 * 32 contacts, see note 1	
	J.....6			2 * 32 contacts, see note 1	
	J.....7			2 * 32 contacts, see note 1	
	J.....8			2 * 32 contacts, see note 1	
	K....21	56.04.0190		Sauer SDS Relais, Type DR- 5V	
	K....41	56.04.0190		Sauer SDS Relais, Type DR- 5V	
	K....61	56.04.0190		Sauer SDS Relais, Type DR- 5V	
	K....81	56.04.0190		Sauer SDS Relais, Type DR- 5V	
	K...101	56.04.0190		Sauer SDS Relais, Type DR- 5V	
	K...121	56.04.0190		Sauer SDS Relais, Type DR- 5V	
	K...141	56.04.0190		Sauer SDS Relais, Type DR- 5V	
	K...161	56.04.0190		Sauer SDS Relais, Type DR- 5V	
	L.....1	62.03.0015	72 uH	Filter coil, 2 A, 0.068 Ohm	
	L.....2	62.03.0015	72 uH	Filter coil, 2 A, 0.068 Ohm	

IND.	POS.NO.	PART NO.	VALUE	SPECIFICATIONS / EQUIVALENT	MANUF.
	L.....3	62.03.0015	72 uH	Filter coil, 2 A, 0.068 Ohm	
	L....21	62.03.0001	10 uH	Filter coil, 1 A	
	L....41	62.03.0001	10 uH	Filter coil, 1 A	
	L....61	62.03.0001	10 uH	Filter coil, 1 A	
	L....81	62.03.0001	10 uH	Filter coil, 1 A	
	L...101	62.03.0001	10 uH	Filter coil, 1 A	
	L...121	62.03.0001	10 uH	Filter coil, 1 A	
	L...141	62.03.0001	10 uH	Filter coil, 1 A	
	L...161	62.03.0001	10 uH	Filter coil, 1 A	
	Q....21	50.03.0496	BC 560		Sie
	Q....41	50.03.0496	BC 560		Sie
	Q....61	50.03.0496	BC 560		Sie
	Q....81	50.03.0496	BC 560		Sie
	Q...101	50.03.0496	BC 560		Sie
	Q...121	50.03.0496	BC 560		Sie
	Q...141	50.03.0496	BC 560		Sie
	Q...161	50.03.0496	BC 560		Sie
	R....21	57.11.4102	1 kOhm	2%	
	R....22	57.11.4223	22 kOhm	2%	
	R....23	57.11.4224	220 kOhm	2%	
	R....24	57.11.4103	10 kOhm	2%	
	R....25	57.11.4223	22 kOhm	2%	
	R....26	57.11.4103	10 kOhm	2%	
	R....27	57.11.3682	6.8 kOhm	1%	
	R....28	57.11.3273	27 kOhm	1%	
	R....31	57.11.4103	10 kOhm	2%	
	R....32	57.11.4103	10 kOhm	2%	
	R....33	57.11.4105	1 MOhm	2%	
	R....34	57.11.3682	6.8 kOhm	1%	
	R....35	57.11.3273	27 kOhm	1%	
	R....36	57.11.3273	27 kOhm	1%	
	R....37	57.11.3684	680 kOhm	1%	
	R....41	57.11.4102	1 kOhm	2%	
	R....42	57.11.4223	22 kOhm	2%	
	R....43	57.11.4224	220 kOhm	2%	

IND.	POS.NO.	PART NO.	VALUE	SPECIFICATIONS / EQUIVALENT	MANUF.
	R....44	57.11.4103	10 kOhm	2%	
	R....45	57.11.4223	22 kOhm	2%	
	R....46	57.11.4103	10 kOhm	2%	
	R....47	57.11.3682	6.8 kOhm	1%	
	R....48	57.11.3273	27 kOhm	1%	
	R....51	57.11.4103	10 kOhm	2%	
	R....52	57.11.4103	10 kOhm	2%	
	R....53	57.11.4105	1 MOhm	2%	
	R....54	57.11.3682	6.8 kOhm	1%	
	R....55	57.11.3273	27 kOhm	1%	
	R....56	57.11.3273	27 kOhm	1%	
	R....57	57.11.3684	680 kOhm	1%	
	R....61	57.11.4102	1 kOhm	2%	
	R....62	57.11.4223	22 kOhm	2%	
	R....63	57.11.4224	220 kOhm	2%	
	R....64	57.11.4103	10 kOhm	2%	
	R....65	57.11.4223	22 kOhm	2%	
	R....66	57.11.4103	10 kOhm	2%	
	R....67	57.11.3682	6.8 kOhm	1%	
	R....68	57.11.3273	27 kOhm	1%	
	R....71	57.11.4103	10 kOhm	2%	
	R....72	57.11.4103	10 kOhm	2%	
	R....73	57.11.4105	1 MOhm	2%	
	R....74	57.11.3682	6.8 kOhm	1%	
	R....75	57.11.3273	27 kOhm	1%	
	R....76	57.11.3273	27 kOhm	1%	
	R....77	57.11.3684	680 kOhm	1%	
	R....81	57.11.4102	1 kOhm	2%	
	R....82	57.11.4223	22 kOhm	2%	
	R....83	57.11.4224	220 kOhm	2%	
	R....84	57.11.4103	10 kOhm	2%	
	R....85	57.11.4223	22 kOhm	2%	
	R....86	57.11.4103	10 kOhm	2%	
	R....87	57.11.3682	6.8 kOhm	1%	
	R....88	57.11.3273	27 kOhm	1%	
	R....91	57.11.4103	10 kOhm	2%	
	R....92	57.11.4103	10 kOhm	2%	
	R....93	57.11.4105	1 MOhm	2%	
	R....94	57.11.3682	6.8 kOhm	1%	
	R....95	57.11.3273	27 kOhm	1%	
	R....96	57.11.3273	27 kOhm	1%	
	R....97	57.11.3684	680 kOhm	1%	
	R...101	57.11.4102	1 kOhm	2%	
	R...102	57.11.4223	22 kOhm	2%	
	R...103	57.11.4224	220 kOhm	2%	
	R...104	57.11.4103	10 kOhm	2%	
	R...105	57.11.4223	22 kOhm	2%	
	R...106	57.11.4103	10 kOhm	2%	
	R...107	57.11.3682	6.8 kOhm	1%	
	R...108	57.11.3273	27 kOhm	1%	
	R...111	57.11.4103	10 kOhm	2%	
	R...112	57.11.4103	10 kOhm	2%	
	R...113	57.11.4105	1 MOhm	2%	
	R...114	57.11.3682	6.8 kOhm	1%	
	R...115	57.11.3273	27 kOhm	1%	
	R...116	57.11.3273	27 kOhm	1%	
	R...117	57.11.3684	680 kOhm	1%	
	R...121	57.11.4102	1 kOhm	2%	
	R...122	57.11.4223	22 kOhm	2%	
	R...123	57.11.4224	220 kOhm	2%	
	R...124	57.11.4103	10 kOhm	2%	
	R...125	57.11.4223	22 kOhm	2%	
	R...126	57.11.4103	10 kOhm	2%	
	R...127	57.11.3682	6.8 kOhm	1%	
	R...128	57.11.3273	27 kOhm	1%	
	R...131	57.11.4103	10 kOhm	2%	
	R...132	57.11.4103	10 kOhm	2%	
	R...133	57.11.4105	1 MOhm	2%	
	R...134	57.11.3682	6.8 kOhm	1%	
	R...135	57.11.3273	27 kOhm	1%	
	R...136	57.11.3273	27 kOhm	1%	
	R...137	57.11.3684	680 kOhm	1%	
	R...141	57.11.4102	1 kOhm	2%	
	R...142	57.11.4223	22 kOhm	2%	
	R...143	57.11.4224	220 kOhm	2%	
	R...144	57.11.4103	10 kOhm	2%	
	R...145	57.11.4223	22 kOhm	2%	
	R...146	57.11.4103	10 kOhm	2%	
	R...147	57.11.3682	6.8 kOhm	1%	
	R...148	57.11.3273	27 kOhm	1%	
	R...151	57.11.4103	10 kOhm	2%	
	R...152	57.11.4103	10 kOhm	2%	
	R...153	57.11.4105	1 MOhm	2%	
	R...154	57.11.3682	6.8 kOhm	1%	
	R...155	57.11.3273	27 kOhm	1%	
	R...156	57.11.3273	27 kOhm	1%	
	R...157	57.11.3684	680 kOhm	1%	
	R...161	57.11.4102	1 kOhm	2%	
	R...162	57.11.4223	22 kOhm	2%	
	R...163	57.11.4224	220 kOhm	2%	
	R...164	57.11.4103	10 kOhm	2%	
	R...165	57.11.4223	22 kOhm	2%	
	R...166	57.11.4103	10 kOhm	2%	
	R...167	57.11.3682	6.8 kOhm	1%	
	R...168	57.11.3273	27 kOhm	1%	
	R...171	57.11.4103	10 kOhm	2%	
	R...172	57.11.4103	10 kOhm	2%	
	R...173	57.11.4105	1 MOhm	2%	
	R...174	57.11.3682	6.8 kOhm	1%	
	R...175	57.11.3273	27 kOhm	1%	
	R...176	57.11.3273	27 kOhm	1%	
	R...177	57.11.3684	680 kOhm	1%	

IND.	POS.NO.	PART NO.	VALUE	SPECIFICATIONS / EQUIVALENT	MANUF.

Note 1 - Connector, 2 * 32 contacts:

Studer nr.	54.11.2005
Burndy nr.	PI 64 B 20 R00 A00 ZO
Philips nr.	2422 025 89297
Erni nr.	9722.543.616

El=Electrolytic, ElBip=Electrolytic Bipolar, PETP=Polyesterfilm.

MANUFACTURER: Fc=Fairchild, ITT=Intermetall, Ph=Philips,
Ses=Sescosem, Sie=Siemens, Tf=Telefunken.

ORIG 87/12/23

BASIS BOARD NRS CONTROLLER (OPTION) 1.820.809.00

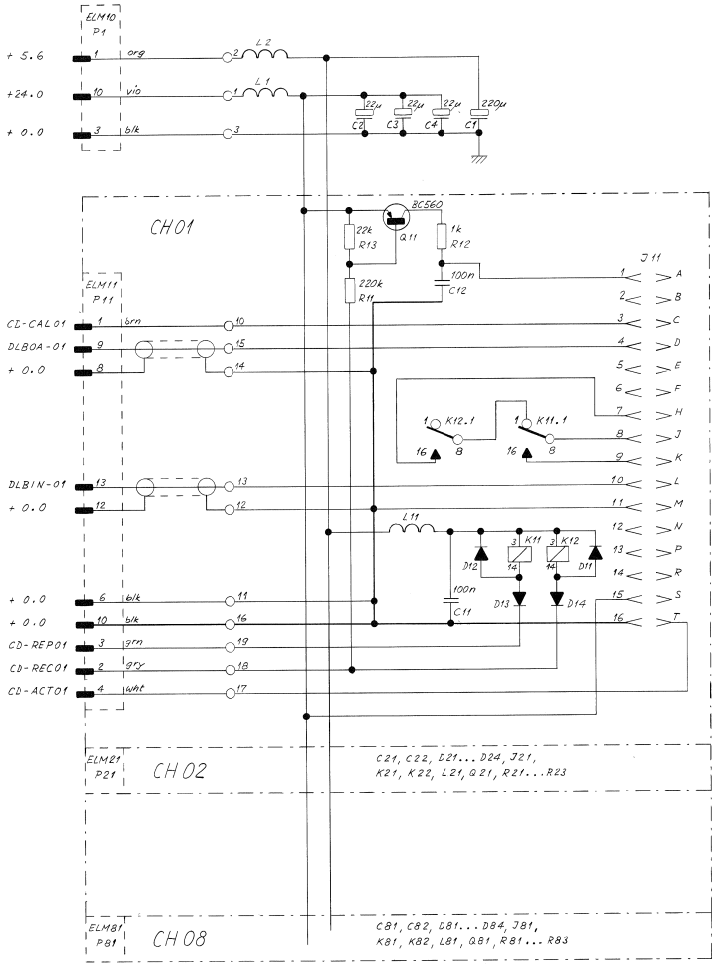

0 18.12.86 Burchregger				
	A820 MCH			PAGE 1 OF 1
STUDER	BASIS BOARD NRS OPTION		SC	1.820.809.00

BASIS BOARD NRS CONTROLLER (OPTION) 1.820.809.00

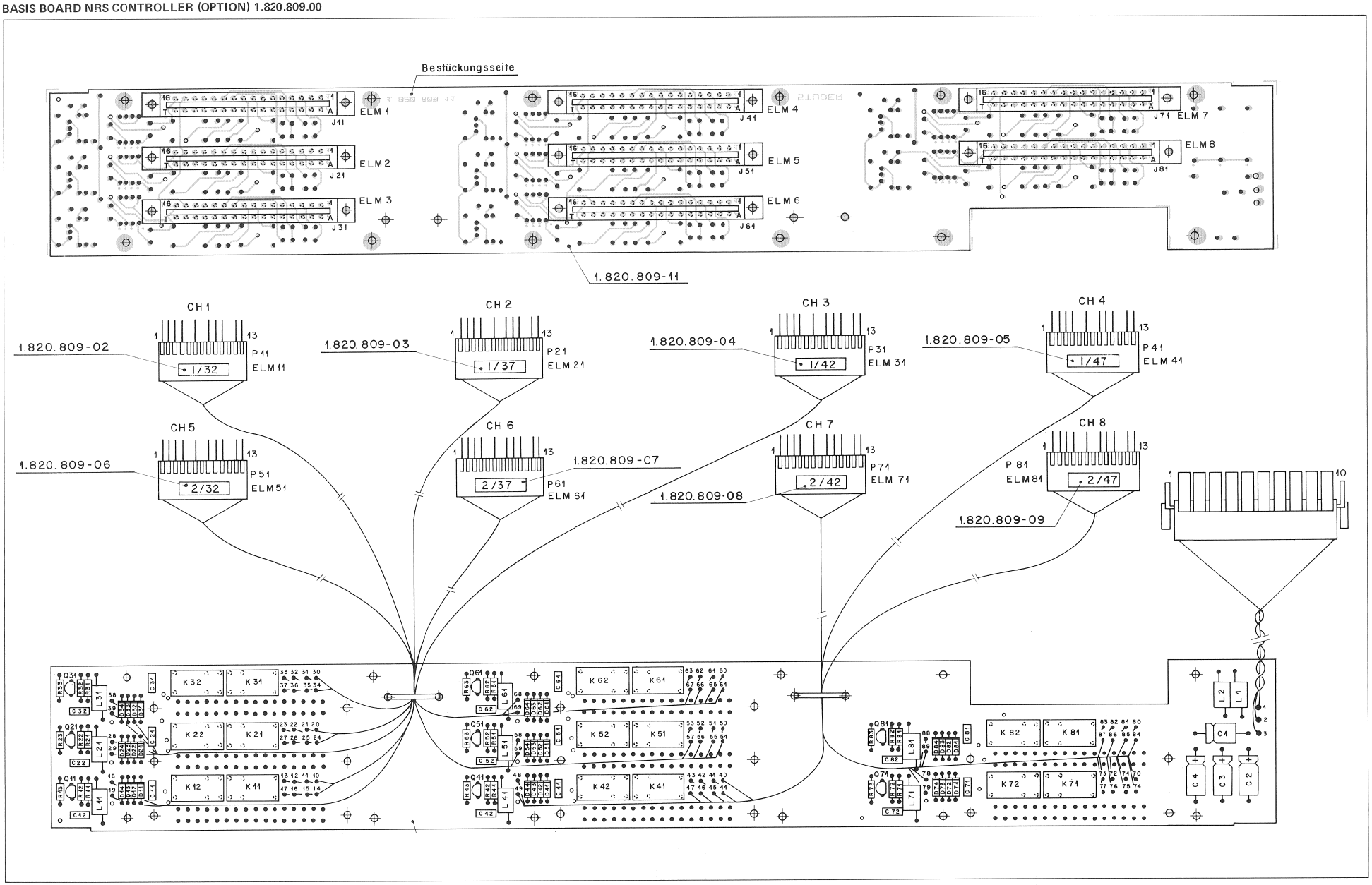

BASIS BOARD NRS CONTROLLER (OPTION) 1.820.809.00

IND.	POS.NO.	PART NO.	VALUE	SPECIFICATIONS / EQUIVALENT	MANUF.
	C....1	59.25.1221	220 uF	-20%, 6.3V, El	
	C....2	59.25.5220	22 uF	-20%, 40V, El	
	C....3	59.25.5220	22 uF	-20%, 40V, El	
	C....4	59.25.5220	22 uF	-20%, 40V, El	
	C....11	59.06.0104	100 nF	10%, PETP	
	C....12	59.06.0104	100 nF	10%, PETP	
	C....21	59.06.0104	100 nF	10%, PETP	
	C....22	59.06.0104	100 nF	10%, PETP	
	C....31	59.06.0104	100 nF	10%, PETP	
	C....32	59.06.0104	100 nF	10%, PETP	
	C....41	59.06.0104	100 nF	10%, PETP	
	C....42	59.06.0104	100 nF	10%, PETP	
	C....51	59.06.0104	100 nF	10%, PETP	
	C....52	59.06.0104	100 nF	10%, PETP	
	C....61	59.06.0104	100 nF	10%, PETP	
	C....62	59.06.0104	100 nF	10%, PETP	
	C....71	59.06.0104	100 nF	10%, PETP	
	C....72	59.06.0104	100 nF	10%, PETP	
	C....81	59.06.0104	100 nF	10%, PETP	
	C....82	59.06.0104	100 nF	10%, PETP	
	D....11	50.04.0125	1N 4448		Fc,ITT,Ph,Ses,Tf
	D....12	50.04.0125	1N 4448		Fc,ITT,Ph,Ses,Tf
	D....13	50.04.0125	1N 4448		Fc,ITT,Ph,Ses,Tf
	D....14	50.04.0125	1N 4448		Fc,ITT,Ph,Ses,Tf
	D....21	50.04.0125	1N 4448		Fc,ITT,Ph,Ses,Tf
	D....22	50.04.0125	1N 4448		Fc,ITT,Ph,Ses,Tf
	D....23	50.04.0125	1N 4448		Fc,ITT,Ph,Ses,Tf
	D....24	50.04.0125	1N 4448		Fc,ITT,Ph,Ses,Tf
	D....31	50.04.0125	1N 4448		Fc,ITT,Ph,Ses,Tf
	D....32	50.04.0125	1N 4448		Fc,ITT,Ph,Ses,Tf
	D....33	50.04.0125	1N 4448		Fc,ITT,Ph,Ses,Tf
	D....34	50.04.0125	1N 4448		Fc,ITT,Ph,Ses,Tf
	D....41	50.04.0125	1N 4448		Fc,ITT,Ph,Ses,Tf
	D....42	50.04.0125	1N 4448		Fc,ITT,Ph,Ses,Tf
	D....43	50.04.0125	1N 4448		Fc,ITT,Ph,Ses,Tf
	D....44	50.04.0125	1N 4448		Fc,ITT,Ph,Ses,Tf

IND.	POS.NO.	PART NO.	VALUE	SPECIFICATIONS / EQUIVALENT	MANUF.
	D....51	50.04.0125	1N 4448		Fc,ITT,Ph,Ses,Tf
	D....52	50.04.0125	1N 4448		Fc,ITT,Ph,Ses,Tf
	D....53	50.04.0125	1N 4448		Fc,ITT,Ph,Ses,Tf
	D....54	50.04.0125	1N 4448		Fc,ITT,Ph,Ses,Tf
	D....61	50.04.0125	1N 4448		Fc,ITT,Ph,Ses,Tf
	D....62	50.04.0125	1N 4448		Fc,ITT,Ph,Ses,Tf
	D....63	50.04.0125	1N 4448		Fc,ITT,Ph,Ses,Tf
	D....64	50.04.0125	1N 4448		Fc,ITT,Ph,Ses,Tf
	D....71	50.04.0125	1N 4448		Fc,ITT,Ph,Ses,Tf
	D....72	50.04.0125	1N 4448		Fc,ITT,Ph,Ses,Tf
	D....73	50.04.0125	1N 4448		Fc,ITT,Ph,Ses,Tf
	D....74	50.04.0125	1N 4448		Fc,ITT,Ph,Ses,Tf
	D....81	50.04.0125	1N 4448		Fc,ITT,Ph,Ses,Tf
	D....82	50.04.0125	1N 4448		Fc,ITT,Ph,Ses,Tf
	D....83	50.04.0125	1N 4448		Fc,ITT,Ph,Ses,Tf
	D....84	50.04.0125	1N 4448		Fc,ITT,Ph,Ses,Tf
	J....11	54.99.0188	2*16 cont.	Pye nr. KBD 16 D-01-01	
	J....21	54.99.0188	2*16 cont.	Pye nr. KBD 16 D-01-01	
	J....31	54.99.0188	2*16 cont.	Pye nr. KBD 16 D-01-01	
	J....41	54.99.0188	2*16 cont.	Pye nr. KBD 16 D-01-01	
	J....51	54.99.0188	2*16 cont.	Pye nr. KBD 16 D-01-01	
	J....61	54.99.0188	2*16 cont.	Pye nr. KBD 16 D-01-01	
	J....71	54.99.0188	2*16 cont.	Pye nr. KBD 16 D-01-01	
	J....81	54.99.0188	2*16 cont.	Pye nr. KBD 16 D-01-01	
	K....11	56.04.0190		Sauer SDS Relais, Type DR- 5V	
	K....12	56.04.0190		Sauer SDS Relais, Type DR- 5V	
	K....21	56.04.0190		Sauer SDS Relais, Type DR- 5V	
	K....22	56.04.0190		Sauer SDS Relais, Type DR- 5V	
	K....31	56.04.0190		Sauer SDS Relais, Type DR- 5V	
	K....32	56.04.0190		Sauer SDS Relais, Type DR- 5V	
	K....41	56.04.0190		Sauer SDS Relais, Type DR- 5V	
	K....42	56.04.0190		Sauer SDS Relais, Type DR- 5V	
	K....51	56.04.0190		Sauer SDS Relais, Type DR- 5V	
	K....52	56.04.0190		Sauer SDS Relais, Type DR- 5V	
	K....61	56.04.0190		Sauer SDS Relais, Type DR- 5V	

IND.	POS.NO.	PART NO.	VALUE	SPECIFICATIONS / EQUIVALENT	MANUF.
	K....62	56.04.0190		Sauer SDS Relais, Type DR- 5V	
	K....71	56.04.0190		Sauer SDS Relais, Type DR- 5V	
	K....72	56.04.0190		Sauer SDS Relais, Type DR- 5V	
	K....81	56.04.0190		Sauer SDS Relais, Type DR- 5V	
	K....82	56.04.0190		Sauer SDS Relais, Type DR- 5V	
	L.....1	62.01.0115		HF Coil, Philips nr. 4312 020 36700	
	L.....2	62.01.0115		HF Coil, Philips nr. 4312 020 36700	
	L....11	62.01.0115		HF Coil, Philips nr. 4312 020 36700	
	L....21	62.01.0115		HF Coil, Philips nr. 4312 020 36700	
	L....31	62.01.0115		HF Coil, Philips nr. 4312 020 36700	
	L....41	62.01.0115		HF Coil, Philips nr. 4312 020 36700	
	L....51	62.01.0115		HF Coil, Philips nr. 4312 020 36700	
	L....61	62.01.0115		HF Coil, Philips nr. 4312 020 36700	
	L....71	62.01.0115		HF Coil, Philips nr. 4312 020 36700	
	L....81	62.01.0115		HF Coil, Philips nr. 4312 020 36700	
	Q....11	50.03.0496	BC 560		Sie
	Q....21	50.03.0496	BC 560		Sie
	Q....31	50.03.0496	BC 560		Sie
	Q....41	50.03.0496	BC 560		Sie
	Q....51	50.03.0496	BC 560		Sie
	Q....61	50.03.0496	BC 560		Sie
	Q....71	50.03.0496	BC 560		Sie
	Q....81	50.03.0496	BC 560		Sie
	R....11	57.11.4224	220 kOhm	5%	
	R....12	57.11.4102	1 kOhm	5%	
	R....13	57.11.4223	22 kOhm	5%	
	R....21	57.11.4224	220 kOhm	5%	
	R....22	57.11.4102	1 kOhm	5%	
	R....23	57.11.4223	22 kOhm	5%	
	R....31	57.11.4224	220 kOhm	5%	
	R....32	57.11.4102	1 kOhm	5%	
	R....33	57.11.4223	22 kOhm	5%	
	R....41	57.11.4224	220 kOhm	5%	
	R....42	57.11.4102	1 kOhm	5%	

IND.	POS.NO.	PART NO.	VALUE	SPECIFICATIONS / EQUIVALENT	MANUF.
	R....43	57.11.4223	22 kOhm	5%	
	R....51	57.11.4224	220 kOhm	5%	
	R....52	57.11.4102	1 kOhm	5%	
	R....53	57.11.4223	22 kOhm	5%	
	R....61	57.11.4224	220 kOhm	5%	
	R....62	57.11.4102	1 kOhm	5%	
	R....63	57.11.4223	22 kOhm	5%	
	R....71	57.11.4224	220 kOhm	5%	
	R....72	57.11.4102	1 kOhm	5%	
	R....73	57.11.4223	22 kOhm	5%	
	R....81	57.11.4224	220 kOhm	5%	
	R....82	57.11.4102	1 kOhm	5%	
	R....83	57.11.4223	22 kOhm	5%	

El=Electrolytic, PETP=Polyesterfilm.

MANUFACTURER: Fc=Fairchild, ITT=ITT Intermetall, Ph=Philips, Ses=Sescosem, Sie=Siemens, Tf=Telefunken.

ORIG 87/02/23

BLOCK DIAGRAM
TIME CODE LINE AMPLIFIER 1.820.820

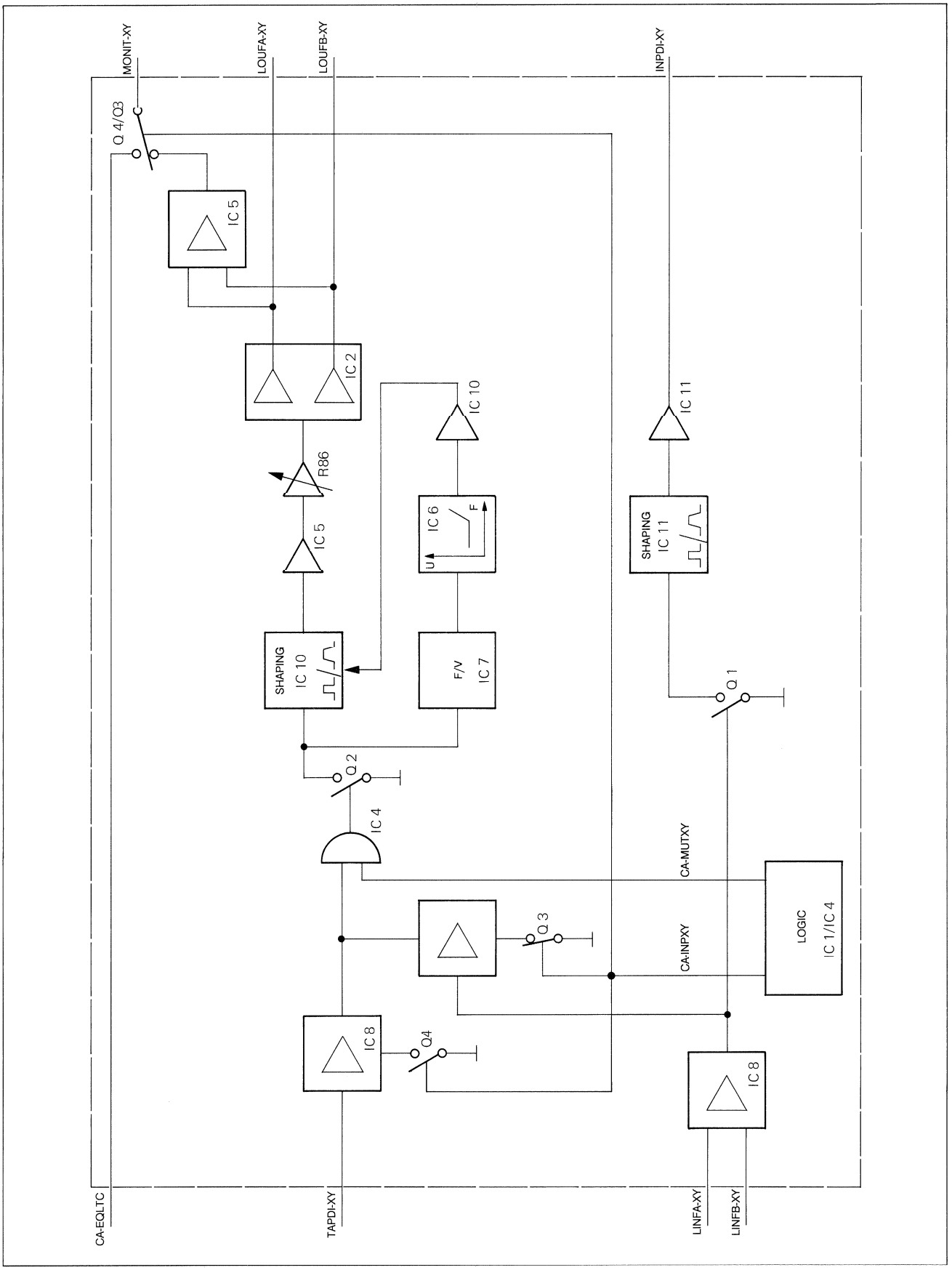

TIME CODE LINE AMPLIFIER 1.820.820.81

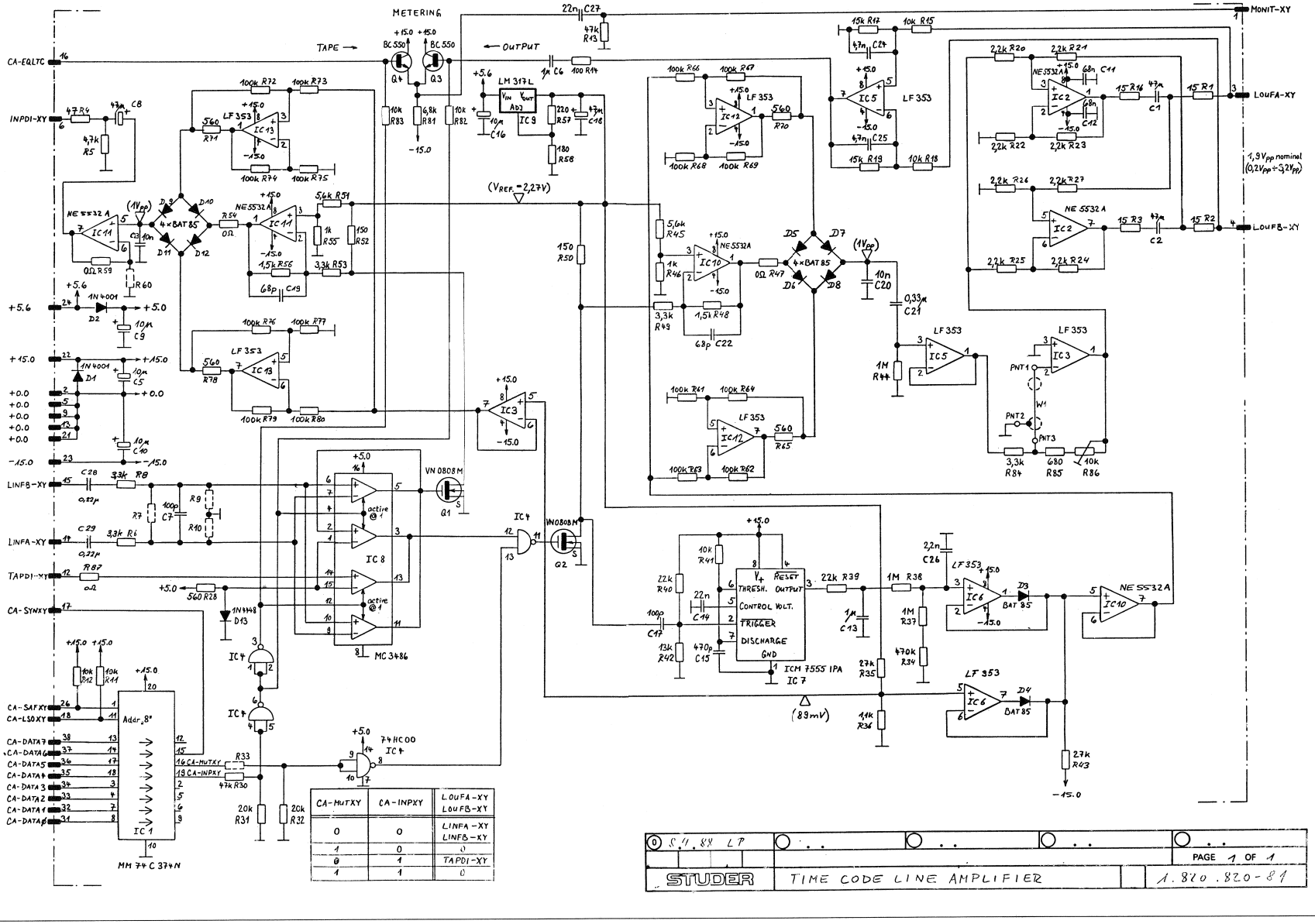

TIME CODE LINE AMPLIFIER 1.820.820.81

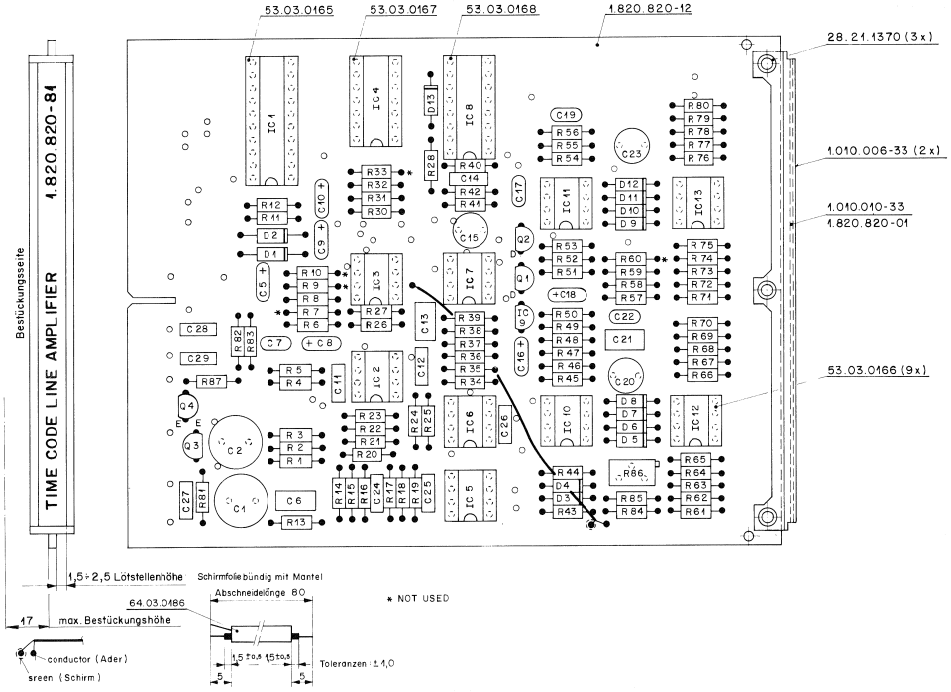

IND.	POS+NO.	PART NO.	VALUE	SPECIFICATIONS / EQUIVALENT	MANUF.
	C.....1	59.99.0401	47 uF	ZGt , 16V , ElBip	Roederstein
	C.....2	59.99.0401	47 uF	ZGt , 16V , ElBip	Roederstein
	C.....5	59.26.2100	10 uF	ZGt , 16V , Sal	Ph
	C.....6	59.04.0125	1 uF	10% , 50V , PeTP	
	C.....7	59.34.4101	100 pF	5% , 63V , Ce	
	C.....8	59.26.0470	47 uF	ZGt ,6x3V , Sal	Ph
	C.....9	59.26.2100	10 uF	ZGt , 16V , Sal	Ph
	C.....10	59.26.2100	10 uF	ZGt , 16V , Sal	Ph
	C.....11	59.06.0683	68 nF	10% , 63V , PETP	
	C.....12	59.06.0683	68 nF	10% , 63V , PETP	
	C.....13	59.06.0105	1 uF	10% , 50V , PeTP	
	C.....14	59.06.0223	22 nF	10% , 63V , PETP	
	C.....15	59.05.1471	470 pF	1% ,630V , PP	
	C.....16	59.26.2100	10 uF	ZGt , 16V , Sal	Ph
	C.....17	59.34.4101	100 pF	5% , 63V , Ce	
	C.....18	59.26.0470	47 uF	ZGt ,6x3V , Sal	Ph
	C.....19	59.34.4680	68 pF	5% , 63V , Ce	
	C.....20	59.05.1103	10 nF	1% , 63V , PP	
	C.....21	59.06.0334	330 nF	10% , 63V , PETP	
	C.....22	59.34.4680	68 pF	5% , 63V , Ce	
	C.....23	59.05.1103	10 nF	1% , 63V , PP	
	C.....24	59.06.5472	4.7 nF	5% , 63V , PETP	
	C.....25	59.06.5472	4.7 nF	5% , 63V , PETP	
	C.....26	59.06.0222	2.2 nF	10% , 63V , PeTP	
	C.....27	59.06.0223	22 nF	10% , 63V , PETP	
	C.....28	59.06.0224	220 nF	10% , 63V , PETP	
	C.....29	59.06.0224	220 nF	10% , 63V , PETP	
	D.....1	50.04.0122	1N 4001	(-1N 4004)	GI+ITT+Mot
	D.....2	50.04.0122	1N 4001	(-1N 4004)	GI+ITT+Mot
	D.....3	50.04.0127	BAT 42	BAT 85 , BAS 40-02	Ph+Sie+Tho
	D.....4	50.04.0127	BAT 42	BAT 85 , BAS 40-02	Ph+Sie+Tho
	D.....5	50.04.0127	BAT 42	BAT 85 , BAS 40-02	Ph+Sie+Tho
	D.....6	50.04.0127	BAT 42	BAT 85 , BAS 40-02	Ph+Sie+Tho
	D.....7	50.04.0127	BAT 42	BAT 85 , BAS 40-02	Ph+Sie+Tho
	D.....8	50.04.0127	BAT 42	BAT 85 , BAS 40-02	Ph+Sie+Tho

IND.	POS+NO.	PART NO.	VALUE	SPECIFICATIONS / EQUIVALENT	MANUF.
	D.....9	50.04.0127	BAT 42	BAT 85 , BAS 40-02	Ph+Sie+Tho
	D.....10	50.04.0127	BAT 42	BAT 85 , BAS 40-02	Ph+Sie+Tho
	D.....11	50.04.0127	BAT 42	BAT 85 , BAS 40-02	Ph+Sie+Tho
	D.....12	50.04.0127	BAT 42	BAT 85 , BAS 40-02	Ph+Sie+Tho
	D.....13	50.04.0125	1N 4448		Fe+ITT+Ph+Sie+Tf
	IC.....1	50.37.0003	MM 74C374N		NS
	IC.....2	50.39.0106	NE 5532 AN	XR 5532 AN+ RC 5532 AN8	Exr+Ra+Sig
	IC.....3	50.09.0101	TL 072 CP	TL8 0353 DP	TI+Tho
	IC.....4	50.17.1000	CD 74HC00E	++ 74 HC 00 ++	Mot+NS+Ph+RCA+SGS+TI+To
	IC.....5	50.09.0101	TL 072 CP	TL8 0353 DP	TI+Tho
	IC.....6	50.09.0101	TL 072 CP	TL8 0353 DP	TI+Tho
	IC.....7	50.37.0036	ICM7555IPA		Max+IS
	IC.....8	50.13.0104	MC 3486 P	DS 3486 N	Mot+NS
	IC.....9	50.10.0108	LM 317 LZ		Mot+NS
	IC.....10	50.39.0106	NE 5532 AN	XR 5532 AN+ RC 5532 AN8	Exr+Ra+Sig
	IC.....11	50.39.0106	NE 5532 AN	XR 5532 AN+ RC 5532 AN8	Exr+Ra+Sig
	IC.....12	50.09.0101	TL 072 CP	TL8 0353 DP	TI+Tho
	IC.....13	50.09.0101	TL 072 CP	TL8 0353 DP	TI+Tho
	U.....1	50.33.1505	VN 0808 M	ZVN 0108 A+ VN 0808 MTR	Six+Fe
	U.....2	50.33.1505	VN 0808 M	ZVN 0108 A+ VN 0808 MTR	Six+Fe
	U.....3	50.03.0497	BC 550		Sie
	U.....4	50.03.0497	BC 550		Sie
	R.....1	57.11.3150	15 Ohm	5%	
	R.....2	57.11.3150	15 Ohm	5%	
	R.....3	57.11.3150	15 Ohm	5%	
	R.....4	57.11.3470	47 Ohm	5%	
	R.....5	57.11.3472	4.7 kOhm	5%	
	R.....6	57.11.3332	3.3 kOhm	5%	
	R.....7		not used		
	R.....8	57.11.3332	3.3 kOhm	5%	
	R.....9		not used		
	R.....10		not used		
	R.....11	57.11.3103	10 kOhm	5%	
	R.....12	57.11.3103	10 kOhm	5%	

IND.	POS+NO.	PART NO.	VALUE	SPECIFICATIONS / EQUIVALENT	MANUF.
	R.....13	57.11.3473	47 kOhm	5%	
	R.....14	57.11.3101	100 Ohm	5%	
	R.....15	57.11.3103	10 kOhm	2%	
	R.....16	57.11.3150	15 Ohm	5%	
	R.....17	57.11.3153	15 kOhm	2%	
	R.....18	57.11.3103	10 kOhm	2%	
	R.....19	57.11.3153	15 kOhm	2%	
	R.....20	57.11.3222	2.2 kOhm	2%	
	R.....21	57.11.3222	2.2 kOhm	2%	
	R.....22	57.11.3222	2.2 kOhm	2%	
	R.....23	57.11.3222	2.2 kOhm	2%	
	R.....24	57.11.3222	2.2 kOhm	2%	
	R.....25	57.11.3222	2.2 kOhm	2%	
	R.....26	57.11.3222	2.2 kOhm	2%	
	R.....27	57.11.3222	2.2 kOhm	2%	
	R.....28	57.11.3961	960 Ohm	1%	
	R.....30	57.11.3473	47 kOhm	5%	
	R.....31	57.11.3203	20 kOhm	5%	
	R.....32	57.11.3203	20 kOhm	5%	
	R.....33		not used		
	R.....34	57.11.3474	470 kOhm	2%	
	R.....35	57.11.3273	27 kOhm	2%	
	R.....36	57.11.3112	1.1 kOhm	2%	
	R.....37	57.11.3105	1 MOhm	2%	
	R.....38	57.11.3105	1 MOhm	2%	
	R.....39	57.11.3223	22 kOhm	5%	
	R.....40	57.11.3223	22 kOhm	5%	
	R.....41	57.11.3103	10 kOhm	1%	
	R.....42	57.11.3133	13 kOhm	5%	
	R.....43	57.11.3273	27 kOhm	5%	
	R.....44	57.11.3105	1 MOhm	5%	
	R.....45	57.11.3162	1.6 kOhm	1%	
	R.....46	57.11.3102	1 kOhm	1%	
	R.....47	57.11.4000	0 Ohm		
	R.....48	57.11.3152	1.5 kOhm	1%	
	R.....49	57.11.3132	3.3 kOhm	1%	

IND.	POS+NO.	PART NO.	VALUE	SPECIFICATIONS / EQUIVALENT	MANUF.
	R.....50	57.11.3151	150 Ohm	1%	
	R.....51	57.11.3562	5.6 kOhm	1%	
	R.....52	57.11.3151	150 Ohm	1%	
	R.....53	57.11.3332	3.3 kOhm	1%	
	R.....54	57.11.4000	0 Ohm		
	R.....55	57.11.3102	1 kOhm	1%	
	R.....56	57.11.3152	1.5 kOhm	1%	
	R.....57	57.11.3221	220 Ohm	1%	
	R.....58	57.11.3181	180 Ohm	1%	
	R.....59	57.11.4000	0 Ohm		
	R.....60		not used		
	R.....61	57.11.3104	100 kOhm	1%	
	R.....62	57.11.3134	100 kOhm	1%	
	R.....63	57.11.3134	100 kOhm	1%	
	R.....64	57.11.3134	100 kOhm	1%	
	R.....65	57.11.3961	960 Ohm	1%	
	R.....66	57.11.3104	100 kOhm	1%	
	R.....67	57.11.3134	100 kOhm	1%	
	R.....68	57.11.3134	100 kOhm	1%	
	R.....69	57.11.3134	100 kOhm	1%	
	R.....70	57.11.3961	960 Ohm	1%	
	R.....71	57.11.3961	960 Ohm	1%	
	R.....72	57.11.3134	100 kOhm	1%	
	R.....73	57.11.3134	100 kOhm	1%	
	R.....74	57.11.3134	100 kOhm	1%	
	R.....75	57.11.3134	100 kOhm	1%	
	R.....76	57.11.3134	100 kOhm	1%	
	R.....77	57.11.3134	100 kOhm	1%	
	R.....78	57.11.3961	960 Ohm	1%	
	R.....79	57.11.3134	100 kOhm	1%	
	R.....80	57.11.3134	100 kOhm	1%	
	R.....81	57.11.3682	6.8 kOhm	5%	
	R.....82	57.11.3103	10 kOhm	5%	
	R.....83	57.11.3103	10 kOhm	5%	
	R.....84	57.11.3332	3.3 kOhm	5%	
	R.....85	57.11.3681	680 Ohm	5%	
	R.....86	58.05.0103	10 kOhm	10% + see note 1	

IND.	POS+NO.	PART NO.	VALUE	SPECIFICATIONS / EQUIVALENT	MANUF.
	R.....87	57.11.4000	0 Ohm		

Note 1 - Potentiometers, 22 turns:
Bourns nr. 3296 Z - 1 - 103
Contelec nr. 183 KZ 103
Murata nr. POT 3105 Z - 1 - 103
Spectrol nr. 64 Z 103 T 000

Ce=Ceramic, Sal=Solid Aluminium, ElBip=Electrolytic Bipolar
PeTP=Polyesterfilm, PP=Polypropylen.

MANUFACTURERS: Exr=Exar, Fe=Fairchild, Fe=Ferranti, GI=General Instruments,
Int=Intersil, ITT=Intermetall, Max=Maxim, Mot=Motorola,
NS=National Semiconductors, Ph=Philips, Ra=Raytheon,
RCA=Radio Corporation of America, Sas=Sescosem, SGS=SGS/Ates,
Sie=Siemens, Sig=Signetics, Six=Siliconix, TF=Telefunken,
Tho=Thomson, TI= Texas Instruments, To=Toshiba.

DRIU 88/04/20

TIME CODE LINE AMPLIFIER (OPTION) 1.820.820.82

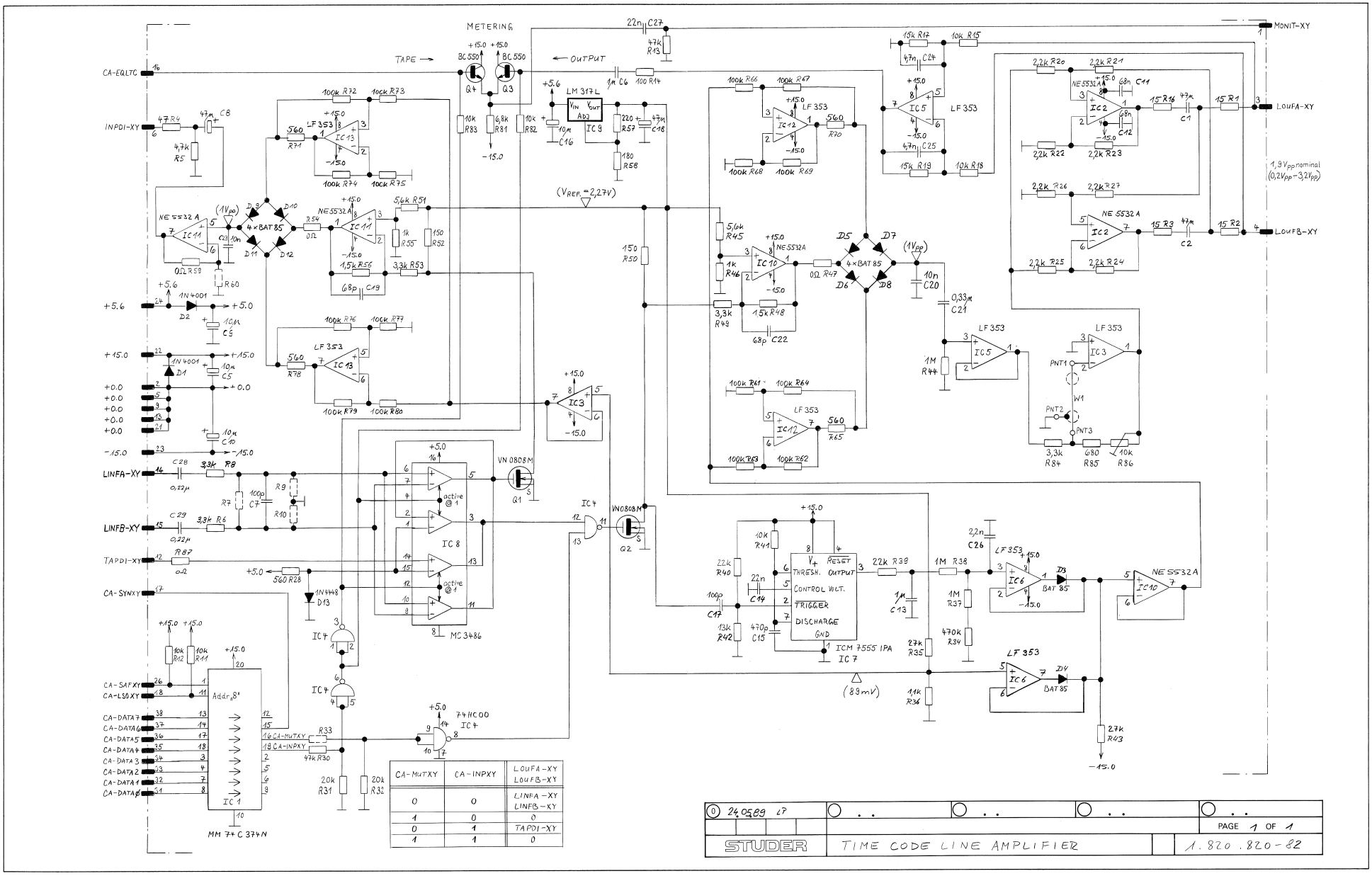

CA-MUTXY	CA-INPXY	LOUFA-XY LOUFB-XY
0	0	LINFA-XY LINFB-XY
1	0	0
0	1	TAPDI-XY
1	1	0

0 24.05.89 L7				PAGE 1 OF 1
STUDER	TIME CODE LINE AMPLIFIER			1.820.820-82

TIME CODE LINE AMPLIFIER (OPTION) 1.820.820.82

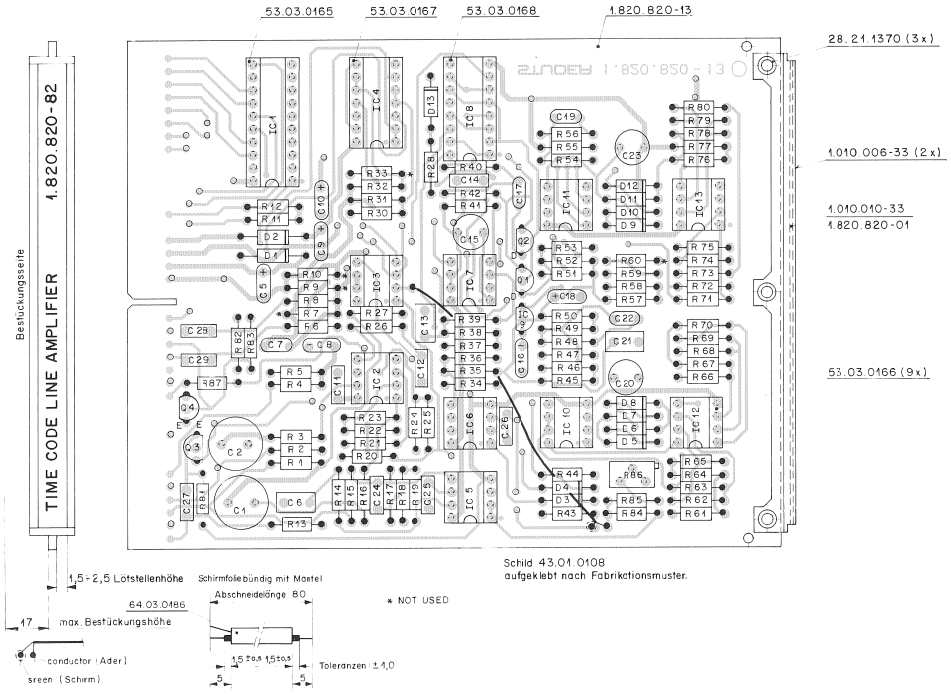

IND.	POS.NO.	PART NO.	VALUE	SPECIFICATIONS / EQUIVALENT	MANUF.
	R....13	57.11.3473	47 kOhm	5%	
	R....14	57.11.3101	100 Ohm	5%	
	R....15	57.11.3103	10 kOhm	2%	
	R....16	57.11.3150	15 Ohm	5%	
	R....17	57.11.3153	15 kOhm	2%	
	R....18	57.11.3103	10 kOhm	2%	
	R....19	57.11.3153	15 kOhm	2%	
	R....20	57.11.3222	2.2 kOhm	2%	
	R....21	57.11.3222	2.2 kOhm	2%	
	R....22	57.11.3222	2.2 kOhm	2%	
	R....23	57.11.3222	2.2 kOhm	2%	
	R....24	57.11.3222	2.2 kOhm	2%	
	R....25	57.11.3222	2.2 kOhm	2%	
	R....26	57.11.3222	2.2 kOhm	2%	
	R....27	57.11.3222	2.2 kOhm	2%	
	R....28	57.11.3561	560 Ohm	5%	
	R....30	57.11.3473	47 kOhm	5%	
	R....31	57.11.3203	20 kOhm	5%	
	R....32	57.11.3203	20 kOhm	5%	
	R....33		not used		
	R....34	57.11.3474	470 kOhm	2%	
	R....35	57.11.3273	27 kOhm	2%	
	R....36	57.11.3112	1.1 kOhm	2%	
	R....37	57.11.3105	1 MOhm	2%	
	R....38	57.11.3105	1 MOhm	2%	
	R....39	57.11.3223	22 kOhm	5%	
	R....40	57.11.3223	22 kOhm	5%	
	R....41	57.11.3103	10 kOhm	1%	
	R....42	57.11.3133	13 kOhm	5%	
	R....43	57.11.3273	27 kOhm	5%	
	R....44	57.11.3105	1 MOhm	5%	
	R....45	57.11.3562	5.6 kOhm	1%	
	R....46	57.11.3102	1 kOhm	1%	
	R....47	57.11.4000	0 Ohm		
	R....48	57.11.3152	1.5 kOhm	1%	
	R....49	57.11.3332	3.3 kOhm	1%	

IND.	POS.NO.	PART NO.	VALUE	SPECIFICATIONS / EQUIVALENT	MANUF.
	R....50	57.11.3151	150 Ohm	1%	
	R....51	57.11.3562	5.6 kOhm	1%	
	R....52	57.11.3151	150 Ohm	1%	
	R....53	57.11.3332	3.3 kOhm	1%	
	R....54	57.11.4000	0 Ohm		
	R....55	57.11.3102	1 kOhm	1%	
	R....56	57.11.3152	1.5 kOhm	1%	
	R....57	57.11.3221	220 Ohm	1%	
	R....58	57.11.3181	180 Ohm	1%	
	R....59	57.11.4000	0 Ohm		
	R....60		not used		
	R....61	57.11.3104	100 kOhm	1%	
	R....62	57.11.3104	100 kOhm	1%	
	R....63	57.11.3104	100 kOhm	1%	
	R....64	57.11.3104	100 kOhm	1%	
	R....65	57.11.3561	560 Ohm	1%	
	R....66	57.11.3104	100 kOhm	1%	
	R....67	57.11.3104	100 kOhm	1%	
	R....68	57.11.3104	100 kOhm	1%	
	R....69	57.11.3104	100 kOhm	1%	
	R....70	57.11.3561	560 Ohm	1%	
	R....71	57.11.3561	560 Ohm	1%	
	R....72	57.11.3104	100 kOhm	1%	
	R....73	57.11.3104	100 kOhm	1%	
	R....74	57.11.3104	100 kOhm	1%	
	R....75	57.11.3104	100 kOhm	1%	
	R....76	57.11.3104	100 kOhm	1%	
	R....77	57.11.3104	100 kOhm	1%	
	R....78	57.11.3561	560 Ohm	1%	
	R....79	57.11.3104	100 kOhm	1%	
	R....80	57.11.3104	100 kOhm	1%	
	R....81	57.11.3682	6.8 kOhm	5%	
	R....82	57.11.3103	10 kOhm	5%	
	R....83	57.11.3103	10 kOhm	5%	
	R....84	57.11.3332	3.3 kOhm	5%	
	R....85	57.11.3681	680 Ohm	5%	
	R....86	58.05.0103	10 kOhm	10% , see note 1	

IND.	POS.NO.	PART NO.	VALUE	SPECIFICATIONS / EQUIVALENT	MANUF.
	C....1	59.99.0401	47 uF	20% , 16V , ElBip	Roederstein
	C....2	59.99.0401	47 uF	20% , 16V , ElBip	Roederstein
	C....5	59.26.2100	10 uF	20% , 16V , Sal	Ph
	C....6	59.06.0105	1 uF	10% , 50V , PETP	
	C....7	59.34.4101	100 pF	5% , 63V , Ce	
	C....8	59.26.0470	47 uF	20% ,6.3V , Sal	Ph
	C....9	59.26.2100	10 uF	20% , 16V , Sal	Ph
	C....10	59.26.2100	10 uF	20% , 16V , Sal	Ph
	C....11	59.06.0683	68 nF	10% , 63V , PETP	
	C....12	59.06.0683	68 nF	10% , 63V , PETP	
	C....13	59.06.0105	1 uF	10% , 50V , PETP	
	C....14	59.06.0223	22 nF	10% , 63V , PETP	
	C....15	59.05.1471	470 pF	1% ,630V , PP	
	C....16	59.26.2100	10 uF	20% , 16V , Sal	Ph
	C....17	59.34.4101	100 pF	5% , 63V , Ce	
	C....18	59.26.0470	47 uF	20% ,6.3V , Sal	Ph
	C....19	59.34.4680	68 pF	5% , 63V , Ce	
	C....20	59.05.1103	10 nF	1% , 63V , PP	
	C....21	59.06.0334	330 nF	10% , 63V , PETP	
	C....22	59.34.4680	68 pF	5% , 63V , Ce	
	C....23	59.05.1103	10 nF	1% , 63V , PP	
	C....24	59.06.5472	4.7 nF	5% , 63V , PETP	
	C....25	59.06.5472	4.7 nF	5% , 63V , PETP	
	C....26	59.06.0222	2.2 nF	10% , 63V , PETP	
	C....27	59.06.0223	22 nF	10% , 63V , PETP	
	C....28	59.06.0224	220 nF	10% , 63V , PETP	
	C....29	59.06.0224	220 nF	10% , 63V , PETP	
	D....1	50.04.0122	1N 4001	(-1N 4004)	GI,ITT,Mot
	D....2	50.04.0122	1N 4001	(-1N 4004)	GI,ITT,Mot
	D....3	50.04.0127	BAT 42	BAT 85 , BAS 40-02	Ph,Sie,Tho
	D....4	50.04.0127	BAT 42	BAT 85 , BAS 40-02	Ph,Sie,Tho
	D....5	50.04.0127	BAT 42	BAT 85 , BAS 40-02	Ph,Sie,Tho
	D....6	50.04.0127	BAT 42	BAT 85 , BAS 40-02	Ph,Sie,Tho
	D....7	50.04.0127	BAT 42	BAT 85 , BAS 40-02	Ph,Sie,Tho
	D....8	50.04.0127	BAT 42	BAT 85 , BAS 40-02	Ph,Sie,Tho

IND.	POS.NO.	PART NO.	VALUE	SPECIFICATIONS / EQUIVALENT	MANUF.
	D....9	50.04.0127	BAT 42	BAT 85 , BAS 40-02	Ph,Sie,Tho
	D....10	50.04.0127	BAT 42	BAT 85 , BAS 40-02	Ph,Sie,Tho
	D....11	50.04.0127	BAT 42	BAT 85 , BAS 40-02	Ph,Sie,Tho
	D....12	50.04.0127	BAT 42	BAT 85 , BAS 40-02	Ph,Sie,Tho
	D....13	50.04.0125	1N 4448		Fe,ITT,Ph,Sie,Tf
	IC....1	50.07.0003	MM 74C374N		NS
	IC....2	50.09.0106	NE 5532 AN	XR 5532 AN, RC 5532 ANB	Ex/Ra/Sig
	IC....3	50.09.0101	TL 072 CP	TD3 0353 DP	TI/Tho
	IC....4	50.17.1800	C9 74HC00E	.. 74 HC 00 ..	Mot/NS/Ph/RCA/SGS/TI/To
	IC....5	50.09.0101	TL 072 CP	TD3 0353 DP	TI/Tho
	IC....6	50.09.0101	TL 072 CP	TD3 0353 DP	TI/Tho
	IC....7	50.07.0836	ICM7555IPA		Max/Is
	IC....8	50.15.0104	NC 3486 P	DS 3486 N	Mot/NS
	IC....9	50.10.0108	LM 317 LZ		Mot/NS
	IC....10	50.09.0106	NE 5532 AN	XR 5532 AN, RC 5532 ANB	Ex/Ra/Sig
	IC....11	50.09.0106	NE 5532 AN	XR 5532 AN, RC 5532 ANB	Ex/Ra/Sig
	IC....12	50.09.0101	TL 072 CP	TD3 0353 DP	TI/Tho
	IC....13	50.09.0101	TL 072 CP	TD3 0353 DP	TI/Tho
	Q....1	50.03.1505	VN 0808 M	ZVN 0108 A, VN 0808 MTR	Siv,Fe
	Q....2	50.03.1505	VN 0808 M	ZVN 0108 A, VN 0808 MTR	Siv,Fe
	Q....3	50.03.0497	BC 550		Sie
	Q....4	50.03.0497	BC 550		Sie
	R....1	57.11.3150	15 Ohm	5%	
	R....2	57.11.3150	15 Ohm	5%	
	R....3	57.11.3150	15 Ohm	5%	
	R....4	57.11.3470	47 Ohm	5%	
	R....5	57.11.3472	4.7 kOhm	5%	
	R....6	57.11.3332	3.3 kOhm	5%	
	R....7		not used		
	R....8	57.11.3332	3.3 kOhm	5%	
	R....9		not used		
	R....10		not used		
	R....11	57.11.3103	10 kOhm	5%	
	R....12	57.11.3103	10 kOhm	5%	

IND.	POS.NO.	PART NO.	VALUE	SPECIFICATIONS / EQUIVALENT	MANUF.
	R....87	57.11.4000	0 Ohm		

Note 1 - Potenticmeter, 22 turn:
Bourns nr. 3296 Z - 1 - 103
Contelec nr. 103 XZ 103
Piher nr. PDT 3105 Z - 1 - 103
Spectrol nr. 64 Z 103 T 000

Ce=Ceramic; Sal=Solid Aluminium; ElBip=Electrolytic Bipolar
PETP=Polyesterfilm, PP=Polypropylen.

MANUFACTURER: Ex=Exar, Fa=Fairchild, Fe=Ferranti, GI=General Instruments,
Is=Intersil, ITT=Intermetall, Max=Maxim, Mot=Motorola,
NS=National Semiconductors, Ph=Philips, Ra=Raytheon,
RCA Radio Corporation of America, Sae=Saeocom, SGS=SGS/Ates,
Sie=Siemens, Sig=Signetics, Siv=Siliconix, Tf=Telefunken,
Tho=Thomson, TI= Texas Instruments, To=Toshiba.

ORIG 89/06/21

TIME CODE READ UNIT 1.820.821.00

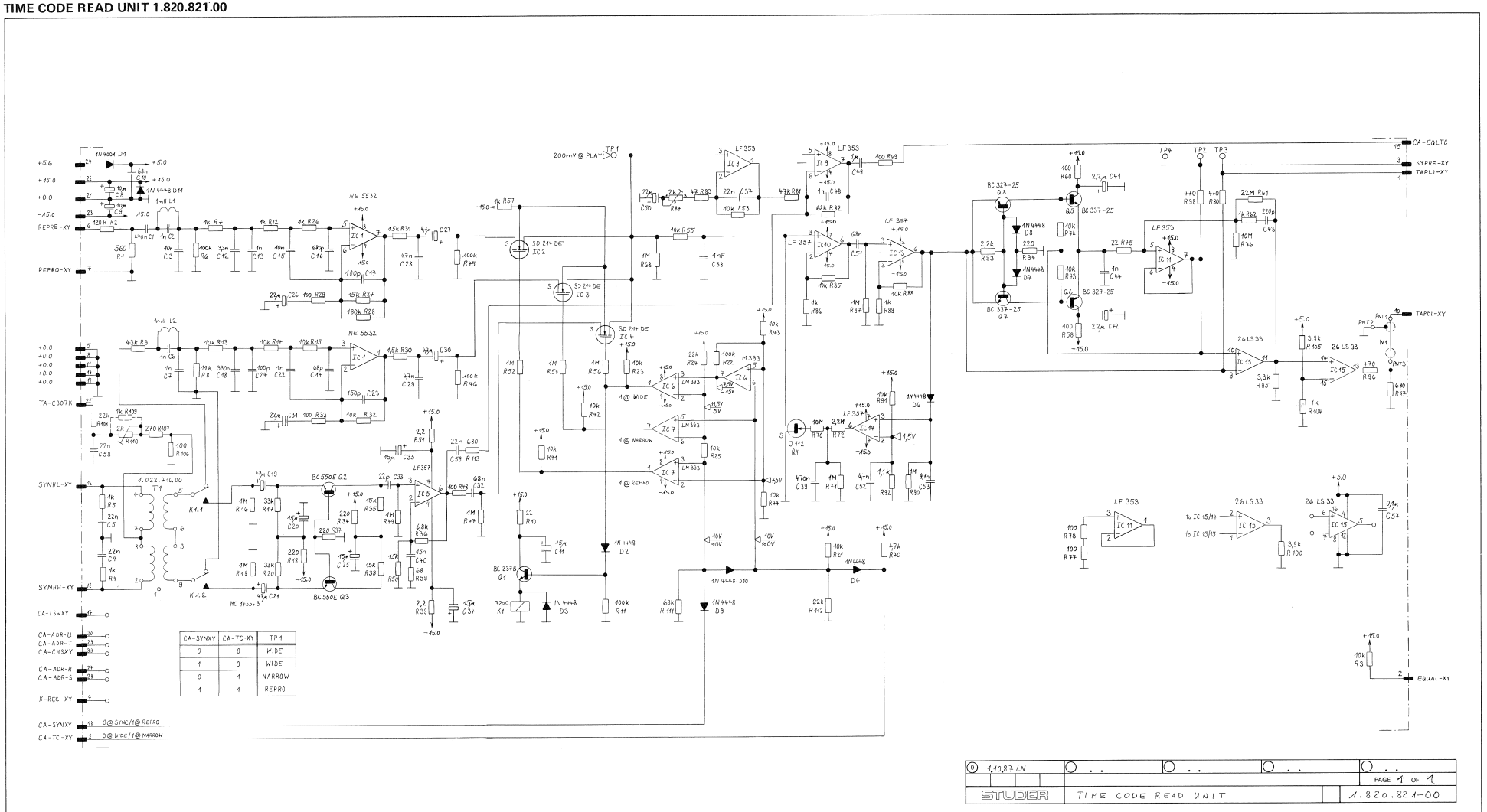

TIME CODE READ UNIT 1.820.821.00

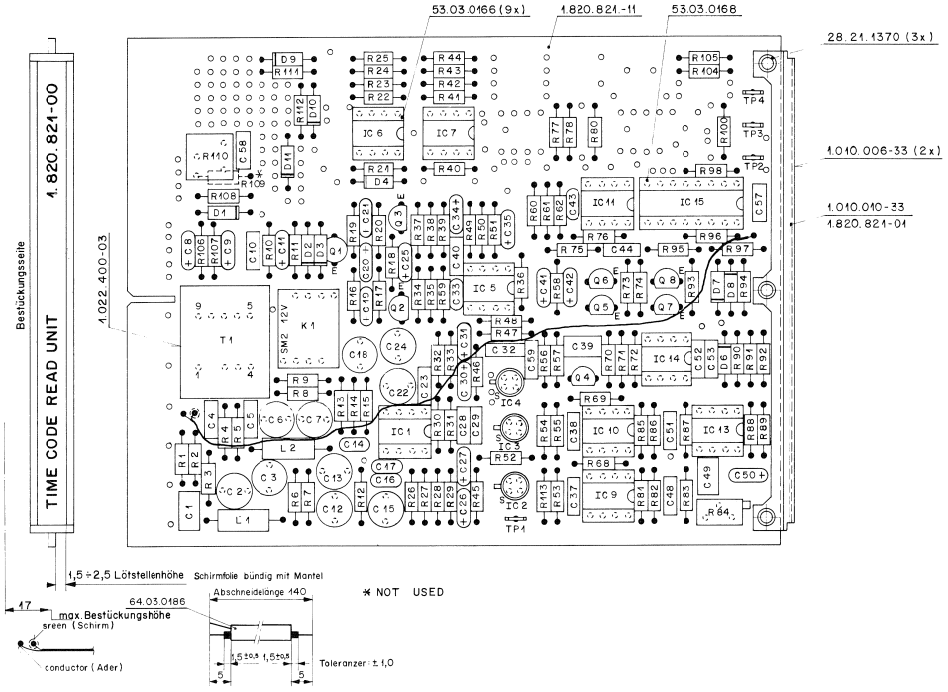

IND.	POS.NO.	PART NO.	VALUE	SPECIFICATIONS / EQUIVALENT	MANUF.
	C....38	59.06.5132	1 nF	5% , 63V , PETP	
	C....39	59.06.0474	470 nF	10% , 63V , PETP	
	C....40	59.06.5153	15 nF	5% , 63V , PETP	
	C....41	59.26.5229	2.2 uF	20% , 25V , Sal	Ph
	C....42	59.26.5229	2.2 uF	20% , 25V , Sal	Ph
	C....43	59.34.4221	220 pF	5% , 63V , Cer	
	C....44	59.06.5122	1 nF	5% , 63V , PETP	
	C....45		not used		
	C....46		not used		
	C....47		not used		
	C....48	59.06.5122	1 nF	5% , 63V , PETP	
	C....49	59.06.0125	1 uF	10% , 50V , PETP	
	C....50	59.26.1220	22 uF	20% , 10V , Sal	Ph
	C....51	59.06.5683	68 nF	10% , 63V , PETP	
	C....52	59.06.0472	4.7 nF	10% , 63V , PETP	
	C....53	59.06.0472	4.7 nF	10% , 63V , PETP	
	C....55		not used		
	C....56		not used		
	C....57	59.06.0124	100 nF	10% , 63V , PETP	
	C....58	59.06.0223	22 nF	10% , 63V , PETP	
	C....59	59.06.0223	22 nF	10% , 63V , PETP	
	D....1	50.34.0122	1N 4001	(=4004)	GI+Mot+ITT
	D....2	50.34.0125	1N 4448		Fc+ITT+Ph+SESxTf
	D....3	50.34.0125	1N 4448		Fc+ITT+Ph+SESxTf
	D....4	50.34.0125	1N 4448		Fc+ITT+Ph+SESxTf
	D....5		not used		
	D....6	50.34.0125	1N 4448		Fc+ITT+Ph+SESxTf
	D....7	50.34.0125	1N 4448		Fc+ITT+Ph+SESxTf
	D....8	50.34.0125	1N 4448		Fc+ITT+Ph+SESxTf
	D....9	50.34.0125	1N 4448		Fc+ITT+Ph+SESxTf
	D....10	50.34.0125	1N 4448		Fc+ITT+Ph+SESxTf
	D....11	50.34.0125	1N 4448		Fc+ITT+Ph+SESxTf
	IC....1	50.39.0136	NE5532AN	XR5532AN= 5532ANB	Sig+Ex+Ka
	IC....2	50.11.0106	SD 214DE	BSD 214	Ph+Six

IND.	POS.NO.	PART NO.	VALUE	SPECIFICATIONS / EQUIVALENT	MANUF.
	R....42	57.11.4103	10 kOhm	5%	
	R....43	57.11.4103	10 kOhm	5%	
	R....44	57.11.4103	10 kOhm	5%	
	R....45	57.11.4104	100 kOhm	5%	
	R....46	57.11.4104	100 kOhm	5%	
	R....47	57.11.4105	1 MOhm	5%	
	R....48	57.11.4101	100 Ohm	5%	
	R....49	57.11.4105	1 MOhm	5%	
	R....50	57.11.4152	1.5 kOhm	2%	
	R....51	57.11.4229	2.2 Ohm	5%	
	R....52	57.11.4135	1 MOhm	5%	
	R....53	57.11.4103	10 kOhm	5%	
	R....54	57.11.4105	1 MOhm	5%	
	R....55	57.11.4103	10 kOhm	2%	
	R....56	57.11.4105	1 MOhm	5%	
	R....57	57.11.4102	1 kOhm	5%	
	R....58	57.11.4101	100 Ohm	5%	
	R....59	57.11.4680	68 Ohm	2%	
	R....60	57.11.4101	100 Ohm	5%	
	R....61	57.11.6226	22 MOhm	10%	
	R....62	57.11.4102	1 kOhm	5%	
	R....63		not used		
	R....64		not used		
	R....65		not used		
	R....66		not used		
	R....67		not used		
	R....68	57.11.4105	1 MOhm	5%	
	R....69	57.11.4101	100 Ohm	5%	
	R....70	57.11.4106	10 MOhm	10%	
	R....71	57.11.4105	1 MOhm	5%	
	R....72	57.11.5225	2.2 MOhm	5%	
	R....73	57.11.4103	10 kOhm	5%	
	R....74	57.11.4103	10 kOhm	5%	
	R....75	57.11.4220	22 Ohm	5%	
	R....76	57.11.5106	10 MOhm	10%	
	R....77	57.11.4101	100 Ohm	5%	
	R....78	57.11.4101	100 Ohm	5%	

IND.	POS.NO.	PART NO.	VALUE	SPECIFICATIONS / EQUIVALENT	MANUF.
	IC....3	50.11.0106	SD 214DE	BSD 214	Ph+Six
	IC....4	50.11.0106	SD 214DE	BSD 214	Ph+Six
	IC....5	50.09.0110	LF 357BN	Slew Rate >40V/ius	Studer
	IC....6	50.35.0233	LM 393N	LM 393	NS+Tho+TI
	IC....7	50.35.0233	LM 393N	LM 393	NS+Tho+TI
	IC....8		not used		
	IC....9	50.39.0101	LF 353N	TL 272 CP	NS+Tho+TI
	IC....10	50.09.0110	LF 357BN	Slew Rate >40V/ius	Studer
	IC....11	50.39.0101	LF 353N	TL 272 CP	NS+Tho+TI
	IC....12		not used		
	IC....13	50.09.0110	LF 357BN	Slew Rate >40V/ius	Studer
	IC....14	50.09.0110	LF 357BN	Slew Rate >40V/ius	Studer
	IC....15	50.15.0109	AM26LS33CN	US26LS33CN	AMD+NS
	K....1	56.04.0171	SM 01012	12V 26Ω, 100V/0.5A AG/AU	ITT
	L....1	52.31.0128	1mH	Gowanda nr. 17-104+ Delevan nr. 1641-105	
	L....2	52.31.0128	1mH	Gowanda nr. 17-104+ Delevan nr. 1641-105	
	TP....1	54.02.0320		Testpoint	
	TP....2	54.02.0320		Testpoint	
	TP....3	54.02.0320		Testpoint	
	TP....4	54.02.0320		Testpoint	
	Q....1	50.03.0436	BC 237B	BC 547B, BC 550B	ITT+Mot+Ph+Sie
	Q....2	50.03.0437	BC 550C		Ph+Sie
	Q....3	50.03.0437	BC 550C		Ph+Sie
	Q....4	50.03.0350	J 112		Mot
	Q....5	50.03.0340	BC 337-25		ITT+NS+Ph+Sie
	Q....6	50.03.0351	BC 327-25		ITT+Ph+Sie
	Q....7	50.03.0340	BC 337-25		ITT+NS+Ph+Sie
	Q....8	50.03.0351	BC 327-25		ITT+Ph+Sie
	R....1	57.11.4561	560 Ohm	2%	
	R....2	57.11.3124	120 kOhm	2%	
	R....3	57.11.4123	10 kOhm	5%	
	R....4	57.11.4122	1 kOhm	5%	

IND.	POS.NO.	PART NO.	VALUE	SPECIFICATIONS / EQUIVALENT	MANUF.
	R....79		not used		
	R....80	57.11.4471	470 Ohm	5%	
	R....81	57.11.4473	47 kOhm	5%	
	R....82	57.11.4683	68 kOhm	5%	
	R....83	57.11.4470	47 Ohm	5%	
	R....84	58.05.0202	2 kOhm	See note 1	
	R....85	57.11.4103	10 kOhm	5%	
	R....86	57.11.4102	1 kOhm	5%	
	R....87	57.11.4105	1 MOhm	5%	
	R....88	57.11.4103	10 kOhm	5%	
	R....89	57.11.4102	1 kOhm	5%	
	R....90	57.11.4105	1 MOhm	5%	
	R....91	57.11.4103	10 kOhm	5%	
	R....92	57.11.3312	1.1 kOhm	5%	
	R....93	57.11.4222	2.2 kOhm	5%	
	R....94	57.11.4221	220 Ohm	5%	
	R....95	57.11.4392	3.9 kOhm	5%	
	R....96	57.11.4471	470 Ohm	5%	
	R....97	57.11.4681	680 Ohm	5%	
	R....98	57.11.4471	470 Ohm	5%	
	R....99		not used		
	R....100	57.11.4392	3.9 kOhm	5%	
	R....101		not used		
	R....102		not used		
	R....103		not used		
	R....104	57.11.4102	1 kOhm	5%	
	R....105	57.11.4392	3.9 kOhm	5%	
	R....106	57.11.4101	100 Ohm	5%	
	R....107	57.11.4271	270 Ohm	5%	
	R....108	57.11.4223	22 kOhm	5%	
	R....109		not used		
	R....110	58.01.8202	2 kOhm	10% , See note 2	
	R....111	57.11.4503	50 kOhm	1%	
	R....112	57.11.4223	22 kOhm	5%	
	R....113	57.11.4681	680 Ohm	5%	
	T....1	1.022.410.03			Studer

IND.	POS.NO.	PART NO.	VALUE	SPECIFICATIONS / EQUIVALENT	MANUF.
	C....1	59.06.0474	470 nF	10% , 63V , PETP	
	C....2	59.04.1102	1 nF	1% , ±30V , PP	
	C....3	59.04.1103	10 nF	1% , 63V , PP	
	C....4	59.06.0223	22 nF	10% , 63V , PETP	
	C....5	59.06.0223	22 nF	10% , 63V , PETP	
	C....6	59.04.1102	1 nF	1% , ±30V , PP	
	C....7	59.04.1102	1 nF	1% , ±30V , PP	
	C....8	59.26.2100	10 uF	20% , 16V , Sal	Ph
	C....9	59.26.2100	10 uF	20% , 16V , Sal	Ph
	C....10	59.06.0683	68 nF	10% , 63V , PETP	
	C....11	59.26.2150	15 uF	20% , 16V , Sal	Ph
	C....12	59.04.2132	3.3 nF	1% , ±100V , PP	
	C....13	59.04.1102	1 nF	1% , ±30V , PP	
	C....14	59.34.4680	68 pF	5% , 63V , Cer	
	C....15	59.04.1103	10 nF	1% , 63V , PP	
	C....16	59.32.2681	680 pF	10% , 50V , Cer	
	C....17	59.34.4101	100 pF	5% , 63V , Cer	
	C....18	59.04.1331	330 pF	1% , ±30V , PP	
	C....19	59.26.0470	47 uF	20% , 6.3V , Sal	Ph
	C....20	59.26.2150	15 uF	20% , 16V , Sal	Ph
	C....21	59.26.0470	47 uF	20% , 6.3V , Sal	Ph
	C....22	59.04.1102	1 nF	1% , ±30V , PP	
	C....23	59.34.4151	150 pF	5% , 63V , Cer	
	C....24	59.04.1101	100 pF	1% , ±30V , PP	
	C....25	59.26.2150	15 uF	20% , 16V , Sal	Ph
	C....26	59.26.1220	22 uF	20% , 10V , Sal	Ph
	C....27	59.26.5479	4.7 uF	20% , 25V , Sal	Ph
	C....28	59.06.0472	4.7 nF	10% , 63V , PETP	
	C....29	59.06.0472	4.7 nF	10% , 63V , PETP	
	C....30	59.26.5479	4.7 uF	20% , 25V , Sal	Ph
	C....31	59.26.1220	22 uF	20% , 10V , Sal	Ph
	C....32	59.06.0683	68 nF	10% , 63V , PETP	
	C....33	59.34.2220	22 pF	5% , 63V , Cer	
	C....34	59.26.2150	15 uF	20% , 16V , Sal	Ph
	C....35	59.26.2150	15 uF	20% , 16V , Sal	Ph
	C....36		not used		
	C....37	59.06.5223	22 nF	5% , 63V , PETP	

IND.	POS.NO.	PART NO.	VALUE	SPECIFICATIONS / EQUIVALENT	MANUF.
	R....5	57.11.4122	1 kOhm	5%	
	R....6	57.11.3124	100 kOhm	1%	
	R....7	57.11.3122	1 kOhm	1%	
	R....8	57.11.3113	11 kOhm	2%	
	R....9	57.11.3433	43 kOhm	2%	
	R....10	57.11.4220	22 Ohm	5%	
	R....11	57.11.4104	100 kOhm	5%	
	R....12	57.11.3322	1 kOhm	1%	
	R....13	57.11.3103	10 kOhm	1%	
	R....14	57.11.3103	10 kOhm	1%	
	R....15	57.11.3103	10 kOhm	1%	
	R....16	57.11.4105	1 MOhm	5%	
	R....17	57.11.3333	33 kOhm	1%	
	R....18	57.11.4221	220 Ohm	5%	
	R....19	57.11.4105	1 MOhm	5%	
	R....20	57.11.3333	33 kOhm	1%	
	R....21	57.11.4103	10 kOhm	5%	
	R....22	57.11.4104	100 kOhm	5%	
	R....23	57.11.4103	10 kOhm	5%	
	R....24	57.11.4223	22 kOhm	5%	
	R....25	57.11.4103	10 kOhm	5%	
	R....26	57.11.3122	1 kOhm	1%	
	R....27	57.11.3153	15 kOhm	1%	
	R....28	57.11.4184	180 kOhm	5%	
	R....29	57.11.3101	100 Ohm	1%	
	R....30	57.11.4152	1.5 kOhm	5%	
	R....31	57.11.4152	1.5 kOhm	5%	
	R....32	57.11.3103	10 kOhm	1%	
	R....33	57.11.3101	100 Ohm	1%	
	R....34	57.11.4221	220 Ohm	5%	
	R....35	57.11.3153	15 kOhm	1%	
	R....36	57.11.4682	6.8 kOhm	2%	
	R....37	57.11.4221	220 Ohm	5%	
	R....38	57.11.3153	15 kOhm	1%	
	R....39	57.11.4272	2.7 Ohm	5%	
	R....40	57.11.4479	4.7 Ohm	5%	
	R....41	57.11.4103	10 kOhm	5%	

Note 1 - 2 kOhm Potentiometer, 22-turn:
Bourns nr. 3296 Z - 1 - 202
Cambion nr. 193 X2 202
Murata nr. PDT 3105 Z - 1 -202
Spectrol nr. 64 Z 202 T 000

Note 2 - 2 kOhm Potentiometer:
Allradley Tr. E 23 202
Bourns nr. 3386 F-1- 202
Spectrol nr. 63 M 202 T010
Murata nr. PDT 3104 F-1-202

Cer=Ceramic, PETP=Polyesterfilm, Sal=solid Aluminium, PP=Polypropylen

MANUFACTUARER: AMD=Advanced Micro Devices, Ex=Exar, Fc=Fairchild,
GI=General Instruments, ITT=Intermetall,
Mot=Motorola, NS=National Semiconductors,
Ph=Philips, Ses=Sescosem, Sie=Siemens, Sig=Signetics,
TF=Telefunken, Tho=Thomson, TI=Texas Instruments

DATE 87/10/01

HEAD ASSEMBLY IDENTIFIER BOARD 1.820.795.00

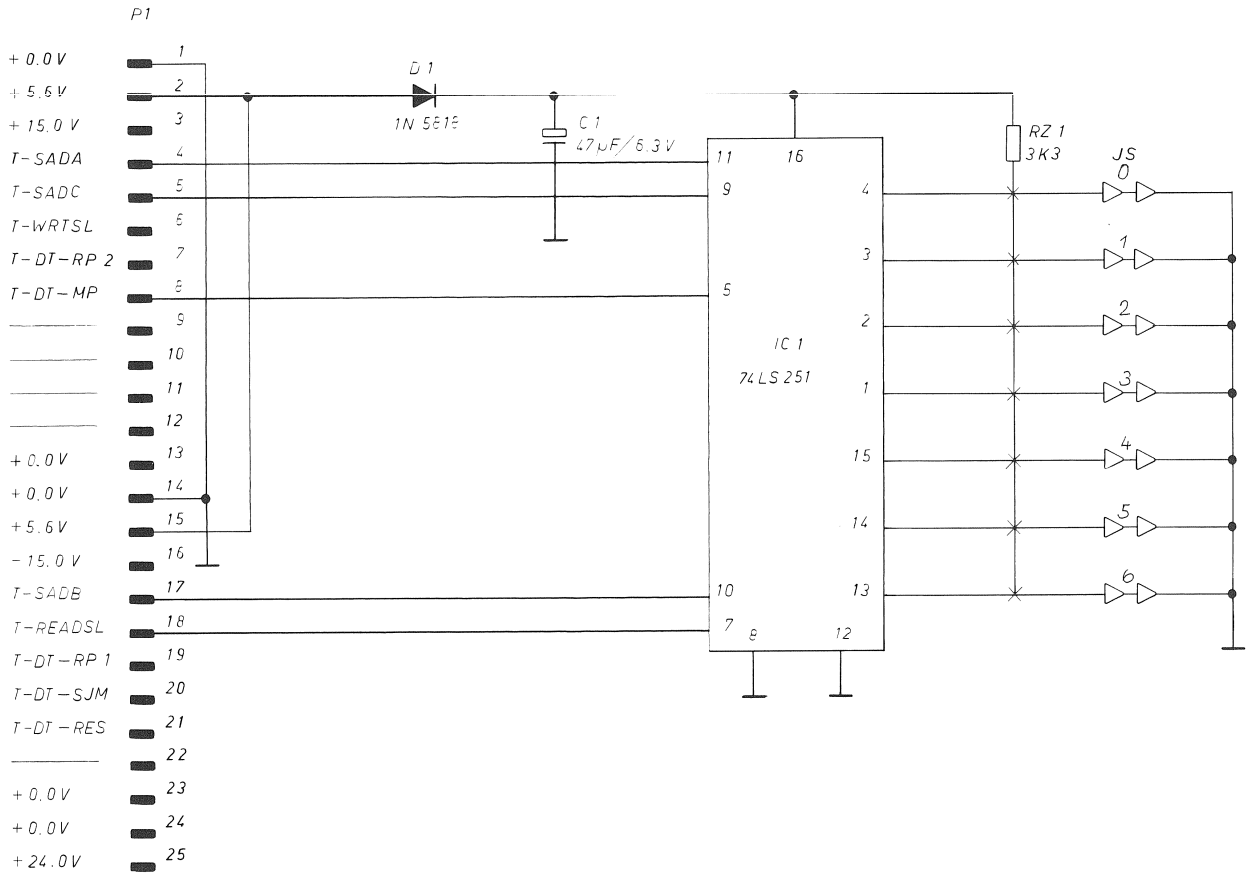

0 3.5.84 WE				PAGE 1 OF 1
	A 820 Logic Section			
STUDER	Head Assembly Identifier PCB	SC	1.820.795.00	

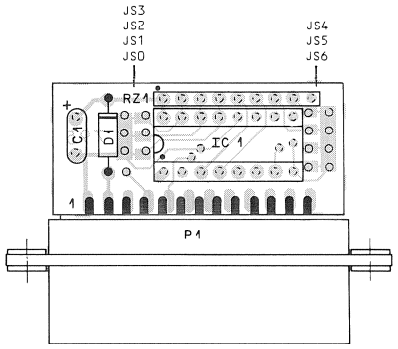

IND.	POS.NO.	PART NO.	VALUE	SPECIFICATIONS / EQUIVALENT	MANUF.
	IC....1	50.06.0251		SN 74 LS 251 N	TI
	D.....1	50.04.0512	1N 5818	1N 5819,	Mot
	C.....1	59.26.0470	47 uF	20%, 6.3V , Sal	Ph
	RZ....1	57.88.4332	8 @3.3K	5%, SINGLE LINE	
	P.....1	54.13.1003	D-TYPE	25 POL. LOET	ITT,TRW

Sal=Solid aluminium

Manufacturer: ITT=Intermetall, Mot=Motorola, Ph=Philips, St=Studer,
TI=Texas Instrument, TRW=TRW

ORIG 84/05/03

STUDER (00) 84/05/03 WE HEAD ASSY IDENTIFIER BOARD 1.820.795.00 PAGE 1

FOR VERSION:	JUMPERS INTERRUPTED (x): JS0	JS1	JS2	JS3	JS4	JS5	JS6
A820-8-1"							
A820-16(24)-2"	x						
A820-24-2"		x					

BASIS BOARD VU PANEL 1.820.705.00

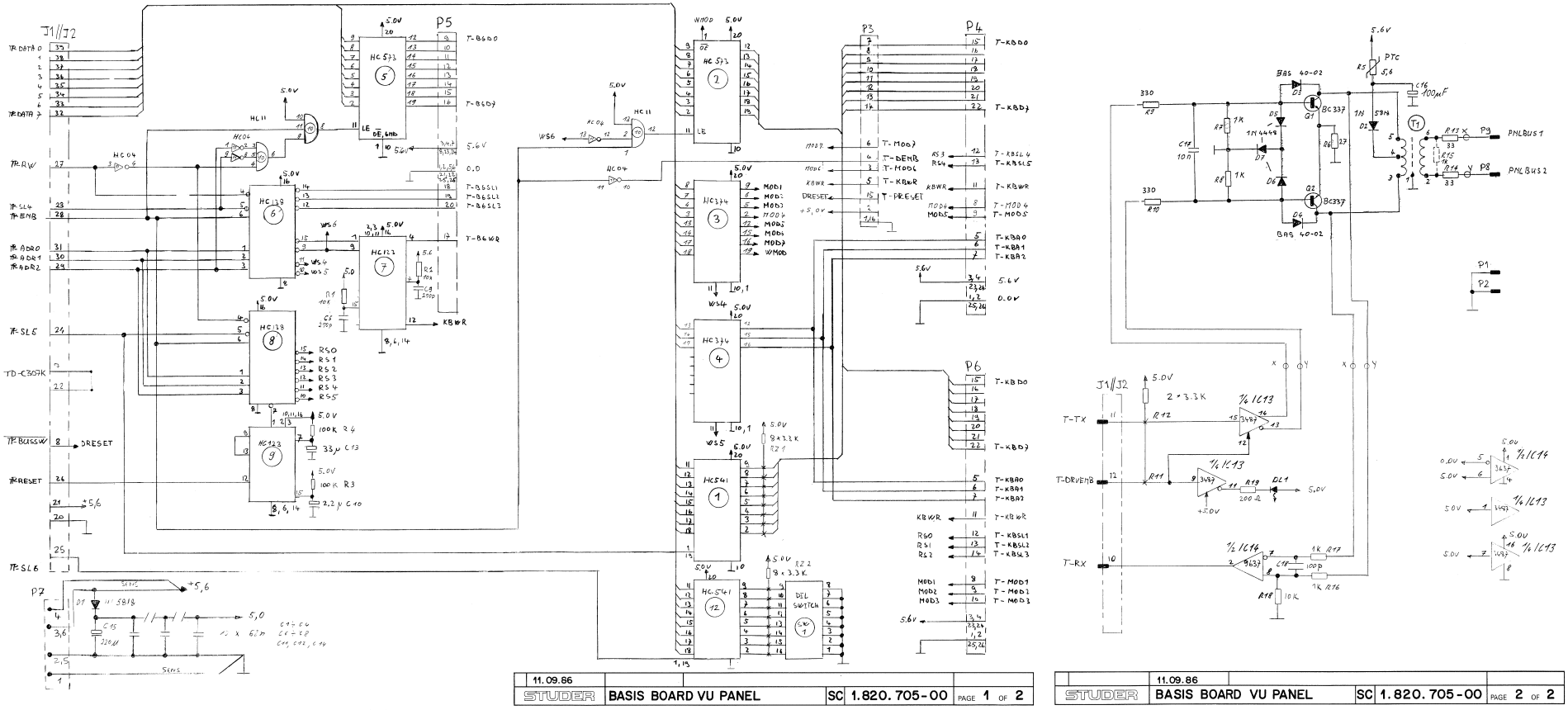

11.09.86				
STUDER	BASIS BOARD VU PANEL	SC	1.820.705-00	PAGE 1 OF 2

11.09.86				
STUDER	BASIS BOARD VU PANEL	SC	1.820.705-00	PAGE 2 OF 2

BASIS BOARD VU PANEL 1.820.705.00

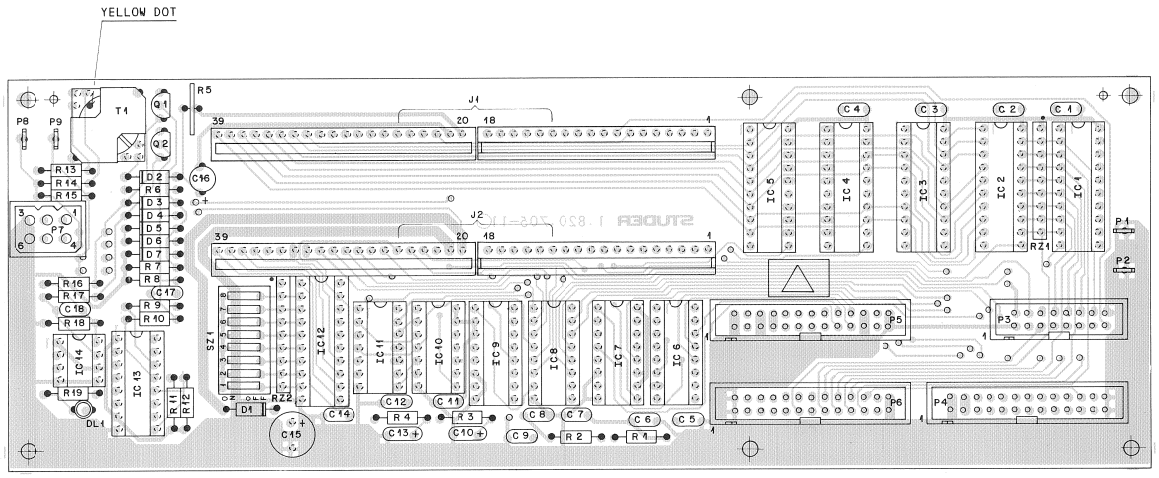

IND.	POS.NO.	PART NO.	VALUE	SPECIFICATIONS / EQUIVALENT	MANUF.
	IC....9	50.17.1123	74 HC 123		Mot.NS.Ph.RCA.SGS.To.TI
	IC....10	50.17.1011	74 HC 11		Mot.NS.Ph.RCA.SGS.To.TI
	IC....11	50.17.1004	74 HC 04		Mot.NS.Ph.RCA.SGS.To.TI
	IC....12	50.17.1541	74 HC 541		Mot.NS.Ph.RCA.SGS.To.TI
	IC....13	50.15.0105	MC 3487 P		Mot.NS
	IC....14	50.15.0114	UA9637ACP		Fc.TI
	J.....1			18 * 20 contacts, see note 1	
	J.....2			18 * 20 contacts, see note 1	
	P.....1	54.01.0320			
	P.....2	54.02.0320			
	P.....3	54.14.2002	16 cont.	see note 2	
	P.....4	54.14.2003	26 cont.	see note 3	
	P.....5	54.14.2003	26 cont.	see note 3	
	P.....6	54.14.2003	26 cont.	see note 3	
	P.....7			see note 4	
	P.....8	54.02.0320			
	P.....9	54.02.0320			
	Q.....1	50.03.0516	BC 337 E		Sie
	Q.....2	50.03.0516	BC 337 E		Sie
	R.....1	57.11.4103	10 kOhm	2%	
	R.....2	57.11.4103	10 kOhm	2%	
	R.....3	57.11.4104	100 kOhm	2%	
	R.....4	57.11.4104	100 kOhm	2%	
	R.....5	57.99.0209	5.6 Ohm	PTC Resistor, Philips nr. 2322 662 91005	
	R.....6	57.11.4270	27 Ohm	2%	
	R.....7	57.11.4102	1 kOhm	2%	
	R.....8	57.11.4102	1 kOhm	2%	
	R.....9	57.11.4331	330 Ohm	2%	
	R.....10	57.11.4331	330 Ohm	2%	
	R.....11	57.11.4332	3.3 kOhm	2%	
	R.....12	57.11.4332	3.3 kOhm	2%	
	R.....13	57.11.4330	33 Ohm	2%	
	R.....14	57.11.4330	33 Ohm	2%	

IND.	POS.NO.	PART NO.	VALUE	SPECIFICATIONS / EQUIVALENT	MANUF.
	R.....15	57.11.4102	1 kOhm	2%	
	R.....16	57.11.4102	1 kOhm	2%	
	R.....17	57.11.4102	1 kOhm	2%	
	R.....18	57.11.4103	10 kOhm	2%	
	R.....19	57.11.3201	200 Ohm	1%	
	RZ.....1	57.88.4332		see note 5	
	RZ.....2	57.88.4332		see note 5	
	SZ.....1	55.01.0168		Switch array, AMP nr.435 166-5	
	T.....1	1.022.223.00		Studio Bus transformer	St

IND.	POS.NO.	PART NO.	VALUE	SPECIFICATIONS / EQUIVALENT	MANUF.
	C.....1	59.06.0633	68 nF	10%	
	C.....2	59.06.0683	68 nF	10%	
	C.....3	59.06.0633	68 nF	10%	
	C.....4	59.06.0683	68 nF	10%	
	C.....5	59.34.4271	270 pF	5%	
	C.....6	59.06.0683	68 nF	10%	
	C.....7	59.06.0683	68 nF	10%	
	C.....8	59.06.0683	68 nF	10%	
	C.....9	59.34.4271	270 pF	5%	
	C.....10	59.26.5229	2.2 uF	20%, 6.3V, Sal	
	C.....11	59.06.0683	68 nF	10%	
	C.....12	59.06.0663	68 nF	10%	
	C.....13	59.26.1330	33 uF	20%, 6.3V, Sal	
	C.....14	59.06.0683	68 nF	10%	
	C.....15	59.22.2221	220 uF	20%, 6.3V, El	
	C.....16	59.22.3101	100 uF	20%, 6.3V, El	
	C.....17	59.06.0103	10 nF	10%	
	C.....18	59.34.4101	100 pF	5%	
	D.....1	50.04.0512	1N 5818	1N 5819	Mot
	D.....2	50.04.0512	1N 5818	1N 5819	Mot
	D.....3	50.04.0127	BAT 42	BAT 85, BAS 40-02	Ph.Sie.Tho
	D.....4	50.04.0127	BAT 42	BAT 85, BAS 40-02	Ph.Sie.Tho
	D.....5	50.04.0125	1N 4448		Fc.ITT.Ph.Ses.Tf
	D.....6	50.04.0125	1N 4448		Fc.ITT.Ph.Ses.Tf
	D.....7	50.04.0125	1N 4448		Fc.ITT.Ph.Ses.Tf
	DL.....1	50.04.2129	LS 3160-HL	Q 62703 - Q 1304	Sie
	IC.....1	50.17.1541	74 HC 541		Mot.NS.Ph.RCA.SGS.To.TI
	IC.....2	50.17.1573	74 HC 573		Mot.NS.Ph.RCA.SGS.To.TI
	IC.....3	50.17.1374	74 HC 374		Mot.NS.Ph.RCA.SGS.To.TI
	IC.....4	50.17.1374	74 HC 374		Mot.NS.Ph.RCA.SGS.To.TI
	IC.....5	50.17.1573	74 HC 573		Mot.NS.Ph.RCA.SGS.To.TI
	IC.....6	50.17.1138	74 HC 138		Mot.NS.Ph.RCA.SGS.To.TI
	IC.....7	50.17.1123	74 HC 123		Mot.NS.Ph.RCA.SGS.To.TI
	IC.....8	50.17.1138	74 HC 138		Mot.NS.Ph.RCA.SGS.To.TI

IND.	POS.NO.	PART NO.	VALUE	SPECIFICATIONS / EQUIVALENT	MANUF.
	Note 1 - 2 connectors:				
	18 contacts:	Studer nr.		54.10.2015	
		Burndy nr.		GCSB 18 SO 19 V1 K9	
	20 contacts:	Studer nr.		54.10.2026	
		Burndy nr.		GCSB 20 SO V1 K9	
	Note 2 - connector:	Yamaichi nr.		FAP-16-08-4055	
		Burndy nr.		BPH 9 B16 B00 GS	
		3M nr.		7616-6002 VZ	
	Note 3 - connector:	Yamaichi nr.		FAP-26-08-4055	
		Burndy nr.		BPH 9 B26 B00 GS	
		3M nr.		7626-6002 VZ	
	Note 4 - Molex plug:	Studer nr.		54.02.0418	
		Molex nr.		03-06-2061	
	with 6 pins:	Studer nr.		54.02.0406	
		Molex nr.		02-06-8103	
	Note 5 - Network 8 * 3.3 kOhm, 5%, single line:				
		Allen Bradley nr.		909 A 332	
		Beckmann nr.		L - 09 - 1 - R 3.3 k	
		Bourns nr.		4609 M - 101 - 332	
		Dale nr.		CSC 09 A 01 - 332 G	
		Sprague nr.		256 C J 332 X2 PD	
		Tama nr.		MRG C 09 X 3.3 kOhm G	
		Vitrom nr.		F9E 3.3 kOhm 2%	
	MANUFACTURER : Fc=Fairchild, ITT=Intermetall, Mot=Motorola, NS=National Semiconductors, Ph=Philips, RCA=RCA Corp. of America, Ses=Sescosem, SGS=SGS/Ates, Sie=Siemens, St=Studer, Tf=Telefunken, Tho=Thomson CSF, TI=Texas Instruments, To=Toshiba.				
	ORIG 86/09/11				

DC CONVERTER 5,6V 1.820.706.00

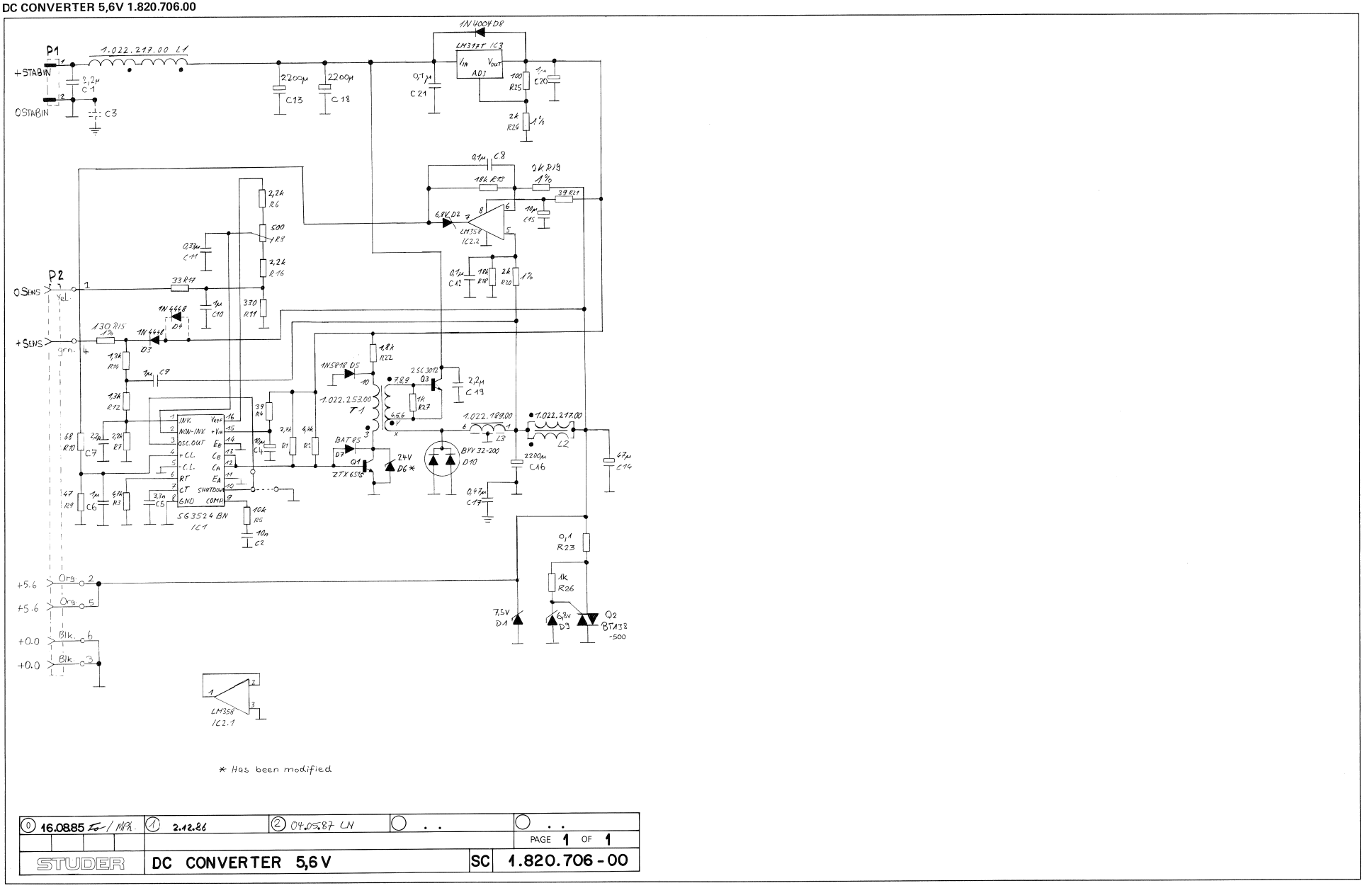

* Has been modified

⓪ 16.08.85 Ia / MA.	① 2.12.86	② 04.05.87 LN	○ . .	○ . .
				PAGE 1 OF 1
STUDER	DC CONVERTER 5,6 V		SC	1.820.706 - 00

DC CONVERTER 5,6V 1.820.706.00

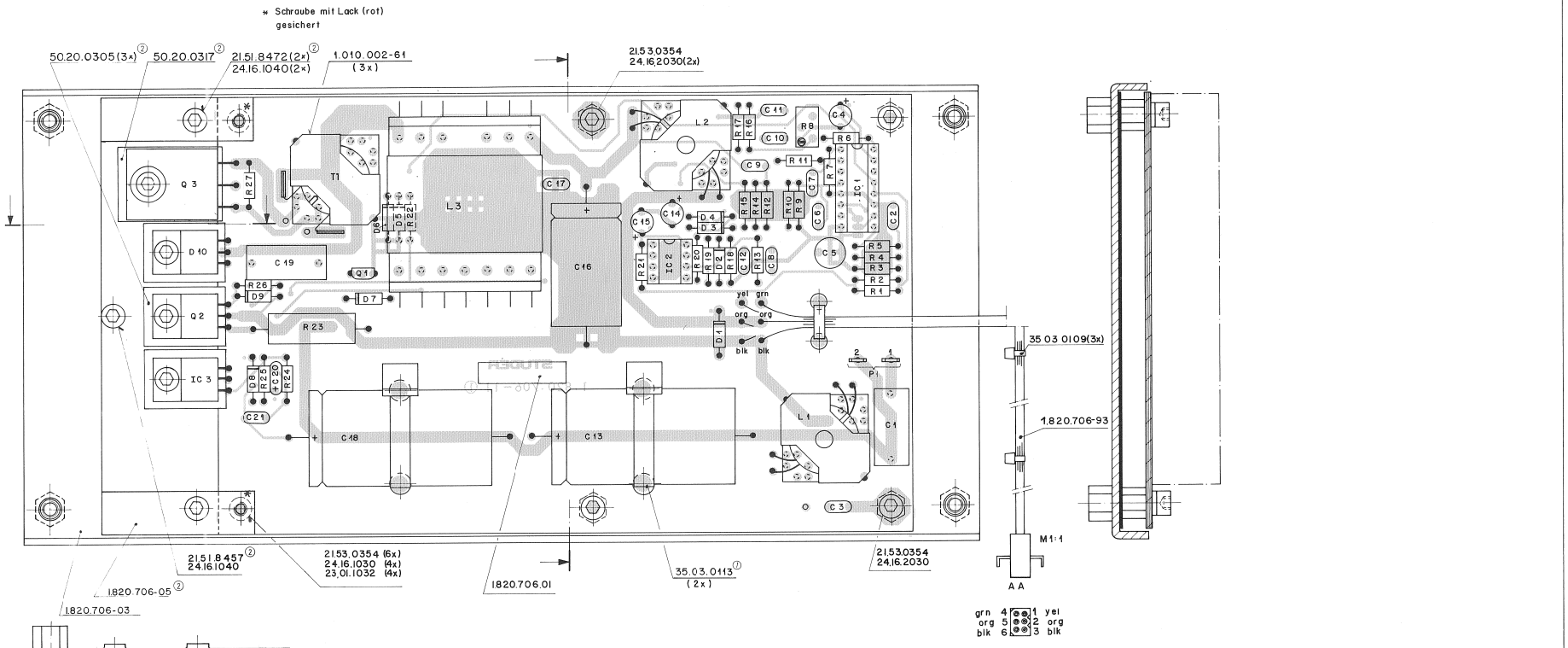

IND.	POS.NO.	PART NO.	VALUE	SPECIFICATIONS / EQUIVALENT	MANUF.
	C....1	59.34.0225	2.2 uF	5%, 63V, PETP	
	C....2	59.06.0103	10 nF	10%, 63V, PETP	
	C....3		not used		
	C....4	59.22.6100	10 uF	20%, 35V, El	
	C....5	59.03.2332	3.3 nF	2.5%, 160V, PP	
	C....6	59.06.5105	1 uF	5%, 50V, PETP	
	C....7	59.34.0229	2.2 pF	5%, Ce	
	C....8	59.06.5104	100 nF	5%, 63V, PETP	
	C....9	59.06.5105	1 uF	5%, 50V, PETP	
	C....10	59.06.5105	1 uF	5%, 50V, PETP	
	C....11	59.06.0334	330 nF	10%, 63V, PETP	
(00)	C....12	59.06.0474	470 nF	10%, 63V, PETP	
(01)	C....12	59.06.5104	100 nF	10%, 63V, PETP	
	C....13	59.23.6222	2200 uF	20%, 63V, El	
	C....14	59.22.3470	47 uF	20%, 10V, El	
	C....15	59.22.6100	10 uF	20%, 35V, El	
	C....16	59.23.3222	2200 uF	20%, 16V, El	
	C....17	59.06.0474	470 nF	10%, 63V, PETP	
	C....18	59.23.6222	2200 uF	20%, 63V, El	
	C....19	59.02.0225	2.2 uF	5%, 63V, MPC	
(00)	C....20	59.23.6102	1000 uF	-20%, 63V, EL	
(01)	C....20	59.25.9109	1 uF	10%, 40V, Sal	
	C....21	59.05.5104	100 nF	5%, 63V, PETP	
	D....1	50.01.1503	7.5V Z	1.3 W	Ssa
	D....2	50.01.1102	6.8V Z	0.4 W	ITT,Ssa
	D....3	50.01.0125	1N 4448		Fc,ITT,Ph,Ssa,Tf
	D....4	50.01.0125	1N 4448		Fc,ITT,Ph,Ssa,Tf
	D....5	50.01.0512	1N 5819		Mot
(00)	D....6	50.01.0125	1N 4448	1N 5819	Fc,ITT,Ph,Ssa,Tf
(02)	D....6	50.04.1121	24 V Z	BZX 55-C24	ITT,Mot,Ph,Tf,Tho
	D....7	50.01.0127	BAT 42	BAT 85, BAS 40-02	Ph,Sie
	D....8	50.01.0105	1N 4004	... 4007	Mot
	D....9	50.04.1102	6.8V Z	0.4 W	ITT,Ssa
	D....10	50.04.0517	BYV 32-200		Ph
	IC...1	50.05.0279	SG 3524 BN		SG

IND.	POS.NO.	PART NO.	VALUE	SPECIFICATIONS / EQUIVALENT	MANUF.
	IC....2	50.05.0286	LM 358 N	LM 358 P	Mot,NS,TI
	IC....3	50.10.0104	LM 317 T	LM 317 KC, LM 317 SP	Mot,NS,SGS-Tho,TI
	L....1	1.022.217.00	11.5 uH	HF-Coil	St
	L....2	1.022.217.00	11.5 uH	HF-Coil	St
	L....3	1.022.189.00	130 uH	HF-Coil	St
	P...1.1	54.02.0320	2.8x0.8		
	P...1.2	54.02.0320	2.8x0.8		
	Q...1	50.03.0523	ZTX 651 S		Fe
	Q....2	50.99.0106	BT 138-500	T 2800 D	Ph,RC
	Q....3	50.03.0517	2 SC 3012		NEC
	R....1	57.11.4272	2.7 kOhm	5%	
	R....2	57.11.4472	4.7 kOhm	5%	
	R....3	57.11.4472	4.7 kOhm	5%	
	R....4	57.11.4390	39 Ohm	5%	
	R....5	57.11.4103	10 kOhm	5%	
	R....6	57.11.4222	2.2 kOhm	5%	
	R....7	57.11.4222	2.2 kOhm	5%	
	R....8	58.05.1301	500 Ohm	10% see note 1	
	R....9	57.11.4470	47 Ohm	5%	
	R....10	57.11.4680	68 Ohm	5%	
	R....11	57.11.4331	330 Ohm	5%	
(00)	R....12	57.11.4.32	1.3 kOhm	2%	
(01)	R....12	57.11.3.32	1.3 kOhm	1%	
	R....13	57.11.4.83	18 kOhm	5%	
(00)	R....14	57.11.4.32	1.3 kOhm	2%	
(01)	R....14	57.11.3.32	1.3 kOhm	1%	
	R....15	57.11.3.31	130 Ohm	2%	
	R....16	57.11.4222	2.2 kOhm	5%	
	R....17	57.11.4330	33 Ohm	5%	
	R....18	57.11.4.83	18 kOhm	5%	
	R....19	57.11.3202	2 kOhm	2%	
	R....20	57.11.3202	2 kOhm	2%	
	R....21	57.11.4390	39 Ohm	5%	

IND.	POS.NO.	PART NO.	VALUE	SPECIFICATIONS / EQUIVALENT	MANUF.
	R....22	57.11.4182	1.8 kOhm	5%	
	R....23	57.56.5108	0.1 Ohm	10%, 4 W	
	R....24	57.11.3202	2 kOhm	2%	
	R....25	57.11.4101	100 Ohm	5%	
	R....26	57.11.4102	1 kOhm	5%	
	R....27	57.11.4102	1 kOhm	5%	
	T.....1	1.022.253.00		POWER SUPPLY DRIVE TRANSFORMER	St

(01) 12.01.87 Corrector of Print error.

(02) 04.05.87 D6 replaced by Zener diode 24V
(overvoltage protection of D7).

NOTE 1 - 500 Ohm Potentiometer lin., 10%
Bourns Nr. 3296 Z -1 - 501
Spectrol Nr. 64 Z 501 T 000
Murata Nr. POT 3105 Z - 1 - 501

Ce=Ceramic, El=Electrolytic, Sal=Solid Aluminium,
MPC=Metallized Polycarbonat, PETP=Polyesterfilm, PP=Polypropylene.

MANUFACTURER : Fc=Fairchild, Fe=Ferranti, ITT=Intermetall, Mot=Motorola,
NIC=Nippon Electric Corp., NS=National Semiconductors,
Ph=Philips, RCA=RCA Corporation of America, Ssa=Sescosem,
SG=Silicon General, SGS=SGS/Ates, Sie=Siemens, St=Studer,
Tf=Telefunken, Tho=Thomson CSF, TI=Texas Instruments.

ORIG 86/06/20 (01) 87/01/12 (02) 87/05/04

MP UNIT VU PANEL 1.820.783.20

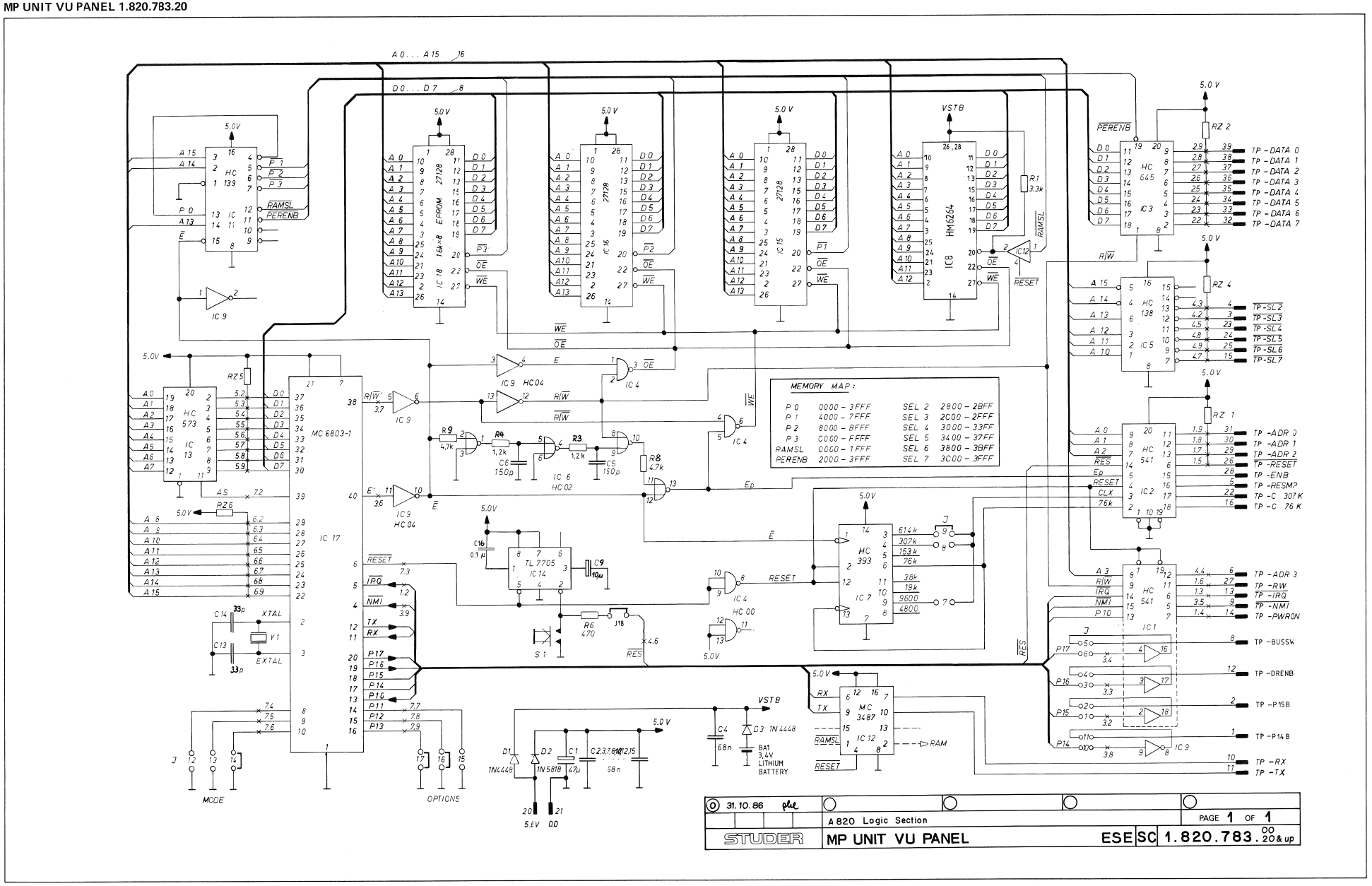

MP UNIT VU PANEL 1.820.783.20

COMPONENT SIDE

MP-UNIT VU PANEL 1.820.783-XX

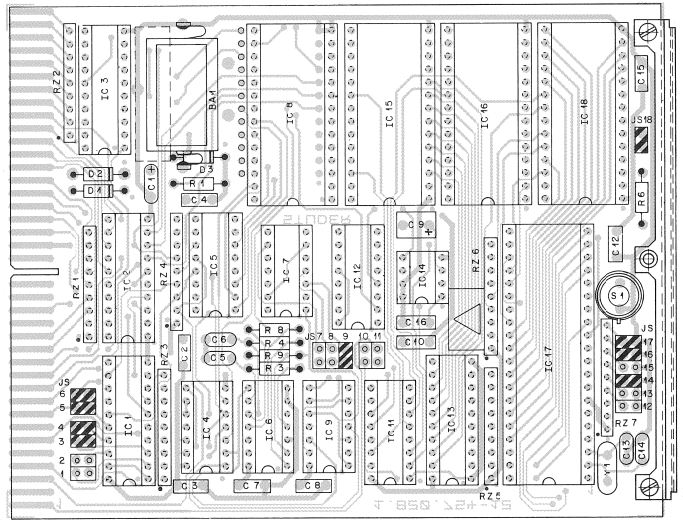

INSERTED:
JS 3,4,5,6,9,14
16,17,18

IVO.	POS.NO.	PART NO.	VALUE	SPECIFICATIONS / EQUIVALENT	MANUF.
	BA....1	89.01.0275		Batt. Lith., 3.6V, D 14.7*25.5	
	C.....1	59.26.0670	47 uF	20%, 6.3V, Sal	Ph
	C.....2	59.06.0683	68 nF	10%, 63V, PETP	
	C.....3	59.06.0683	68 nF	10%, 63V, PETP	
	C.....4	59.06.0683	68 nF	10%, 63V, PETP	
	C.....5	59.34.7151	150 pF	2%, Ce	
	C.....6	59.34.7151	150 pF	2%, Ce	
	C.....7	59.06.0683	68 nF	10%, 63V, PETP	
	C.....8	59.06.0683	68 nF	10%, 63V, PETP	
	C.....9	59.26.2100	10 uF	20%, 16V, Sal	
	C....10	59.06.0683	68 nF	10%, 63V, PETP	
	C....11		not used		
	C....12	59.06.0683	68 nF	10%, 63V, PETP	
	C....13	59.34.2330	33 pF	5%, Ce	
	C....14	59.34.2330	33 pF	5%, Ce	
	C....15	59.06.0683	68 nF	10%, 63V, PETP	
	C....16	59.06.0104	100 nF	10%, 63V, PETP	
	D.....1	50.04.0125	1N 4448		Fc,ITT,Ph,Ses,Tf
	D.....2	50.04.0512	1N 5818	1N 5819	Mot
	D.....3	50.04.0125	1N 4448		Fc,ITT,Ph,Ses,Tf
	IC....1	50.17.1541	74 HC 541		Mot,NS,Ph,RCA,SGS,TI,To
	IC....2	50.17.1541	74 HC 541		Mot,NS,Ph,RCA,SGS,TI,To
	IC....3	50.17.1645	74 HC 645		Mot,NS,Ph,RCA,SGS,TI,To
	IC....4	50.17.1003	74 HC 00		Mot,NS,Ph,RCA,SGS,TI,To
	IC....5	50.17.1138	74 HC 138		Mot,NS,Ph,RCA,SGS,TI,To
	IC....6	50.17.1002	74 HC 02		Mot,NS,Ph,RCA,SGS,TI,To
	IC....7	50.17.1393	74 HC 393		Mot,NS,Ph,RCA,SGS,TI,To
	IC....8	50.14.0133	HM6264P-15	TC 5564-15	Hi,To
	IC....9	50.17.0004	74 HCT 04		Mot,NS,Ph,RCA,SGS,TI,To
	IC....10		not used		
	IC....11	50.17.1139	74 HC 139		Mot,NS,Ph,RCA,SGS,TI,To
	IC....12	50.15.0105	MC 3487 P	DS 3487 N	Mot,NS
	IC....13	50.17.1573	74 HC 573		Mot,NS,Ph,RCA,SGS,TI,To
	IC....14	50.11.0122	TL7705ACP		TI

:NO.	POS.NO.	PART NO.	VALUE	SPECIFICATIONS / EQUIVALENT	MANUF.
	IC...15		not used		
	IC...16	50.14.0125	27128	HN 4827128G-30	Hi,It
	IC...17	50.16.0107	MC6803P-1	6803P-L	Mot,Hi
	IC...18	50.14.0125	27128	HN 4827128G-30	Hi,It
	JS....1			see note 2	
	JS....2			see note 2	
	JS....3			see note 2	
	JS....4			see note 2	
	JS....5			see note 2	
	JS....6			see note 2	
	JS....7			see note 2	
	JS....8			see note 2	
	JS....9			see note 2	
	JS....10			see note 2	
	JS....11			see note 2	
	JS....12			see note 2	
	JS....13			see note 2	
	JS....14			see note 2	
	JS....15			see note 2	
	JS....16			see note 2	
	JS....17			see note 2	
	JS....18			see note 2	
	MP....1	29.21.6002			
	MP....2	29.21.6002			
	R.....1	57.11.4332	3.3 kOhm	2%	
	R.....2		not used		
	R.....3	57.11.4122	1.2 kOhm	2%	
	R.....4	57.11.4122	1.2 kOhm	2%	
	R.....5		not used		
	R.....6	57.11.4471	470 Ohm	2%	
	R.....7		not used		
	R.....8	57.11.4472	4.7 kOhm	2%	
	R.....9	57.11.4472	4.7 kOhm	2%	

IND.	POS.NO.	PART NO.	VALUE	SPECIFICATIONS / EQUIVALENT	MANUF.
	RZ....1	57.88.4332		see note 3	
	RZ....2	57.88.4332		see note 3	
	RZ....3	57.88.4332		see note 3	
	RZ....4	57.88.4332		see note 3	
	RZ....5	57.88.4332		see note 3	
	RZ....6	57.88.4332		see note 3	
	RZ....7	57.88.4332		see note 3	
	S.....1	55.03.0122		Chicago Switch 34-550-001	
	Y.....1	89.01.0560		4.9152 MHz, +-100 ppm	

Note 1 - IC15/16/18 : Software is delivered in a set only.

Note 2 - Contact pin:
Studer Nr. 54.01.0020
Berg Nr. 75 160-102-36
Philips Nr. 2422 025 89303
Bridge:
Studer Nr. 54.01.0021
Berg Nr. 65 474-001
Philips Nr. 2422 024 88003

Note 3 - Network:
8 * 3.3 kOhm, 5%
Sicovend Nr. C09 x 3.3 k J
Ineltro Nr. R88 3.3 k 5%

Ce=Ceramic, Sal=Solid Aluminium, PETP=Polyesterfilm.

MANUFACTURER: Fc=Fairchild, Hi=Hitachi, ITT=Intermetall, Mot=Motorola,
NS=National Semiconductors, OK=OKI, Ph=Philips,
Ses=Sescosem, Tf=Telefunken, TI=Texas Instruments.

ORIG 86/10/31

BARGRAPH BOARD 8CH 1.820.736.00

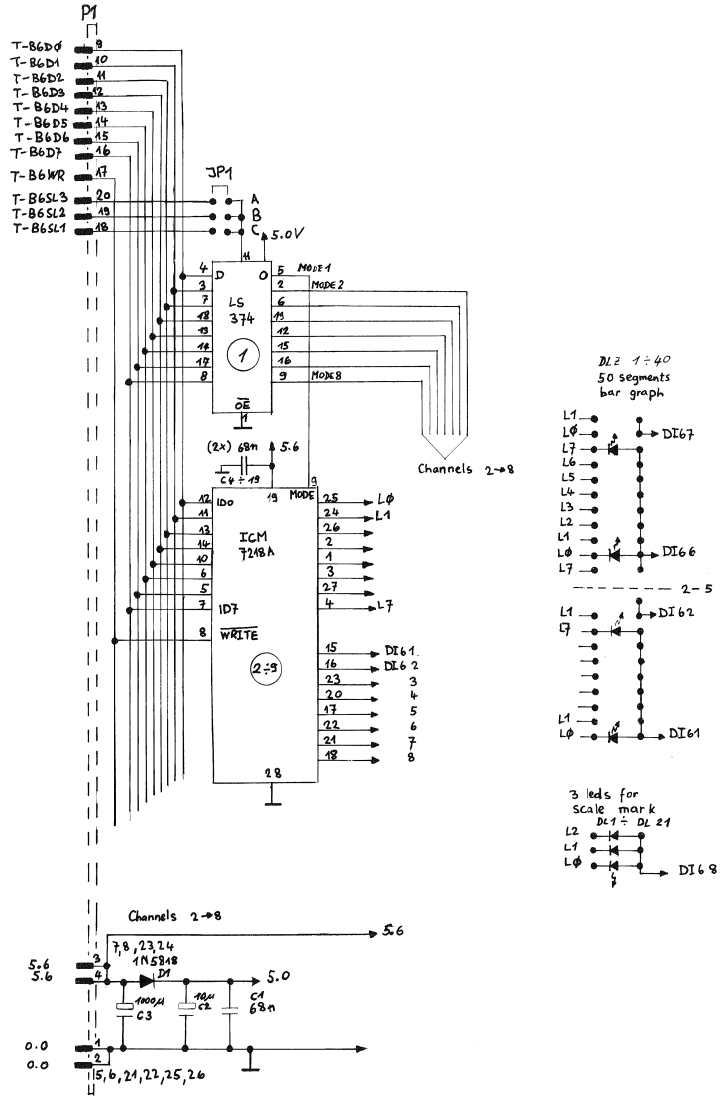

9.06.83	23.08.83			
STUDER	BARGRAPH BOARD 8CH	SC	1.820.736-00	PAGE 1 OF 1

BARGRAPH BOARD 8CH 1.820.736.00

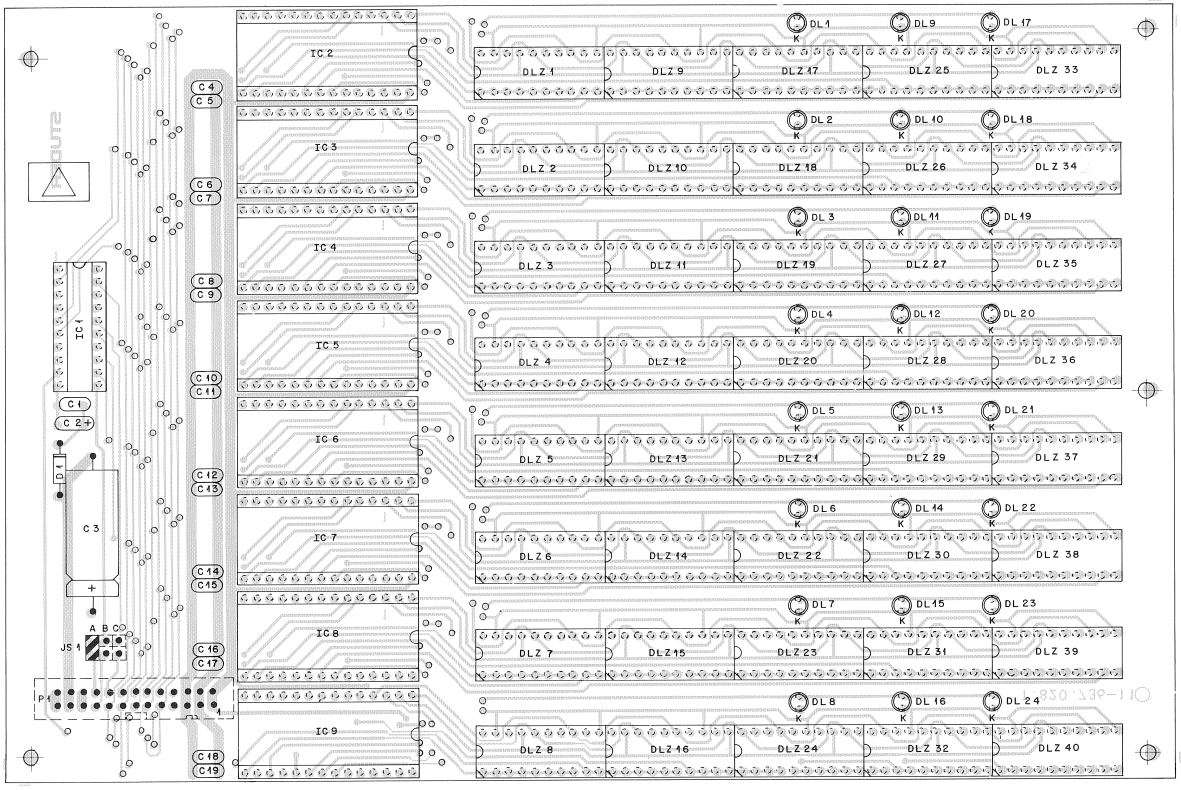

JS1: INSERTED

DL1 ÷ DL24
K=Kathode

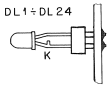

IND.	POS.NO.	PART NO.	VALUE	SPECIFICATIONS / EQUIVALENT	MANUF.
	DL...16	50.04.2129	LS3160-HL	Q 62 703-Q 1304	Sie
	DL...17	50.04.2129	LS3160-HL	Q 62 703-Q 1304	Sie
	DL...18	50.04.2129	LS3160-HL	Q 62 703-Q 1304	Sie
	DL...19	50.04.2129	LS3160-HL	Q 62 703-Q 1304	Sie
	DL...20	50.04.2129	LS3160-HL	Q 62 703-Q 1304	Sie
	DL...21	50.04.2129	LS3160-HL	Q 62 703-Q 1304	Sie
	DL...22	50.04.2129	LS3160-HL	Q 62 703-Q 1304	Sie
	DL...23	50.04.2129	LS3160-HL	Q 62 703-Q 1304	Sie
	DL...24	50.04.2129	LS3160-HL	Q 62 703-Q 1304	Sie
	DLZ...1	50.04.2150	MV 57164	LGS, LED array	GI
	DLZ...2	50.04.2150	MV 57164	LGS, LED array	GI
	DLZ...3	50.04.2150	MV 57164	LGS, LED array	GI
	DLZ...4	50.04.2150	MV 57164	LGS, LED array	GI
	DLZ...5	50.04.2150	MV 57164	LGS, LED array	GI
	DLZ...6	50.04.2150	MV 57164	LGS, LED array	GI
	DLZ...7	50.04.2150	MV 57164	LGS, LED array	GI
	DLZ...8	50.04.2150	MV 57164	LGS, LED array	GI
	DLZ...9	50.04.2150	MV 57164	LGS, LED array	GI
	DLZ...10	50.04.2150	MV 57164	LGS, LED array	GI
	DLZ...11	50.04.2150	MV 57164	LGS, LED array	GI
	DLZ...12	50.04.2150	MV 57164	LGS, LED array	GI
	DLZ...13	50.04.2150	MV 57164	LGS, LED array	GI
	DLZ...14	50.04.2150	MV 57164	LGS, LED array	GI
	DLZ...15	50.04.2150	MV 57164	LGS, LED array	GI
	DLZ...16	50.04.2150	MV 57164	LGS, LED array	GI
	DLZ...17	50.04.2150	MV 57164	LGS, LED array	GI
	DLZ...18	50.04.2150	MV 57164	LGS, LED array	GI
	DLZ...19	50.04.2150	MV 57164	LGS, LED array	GI
	DLZ...20	50.04.2150	MV 57164	LGS, LED array	GI
	DLZ...21	50.04.2150	MV 57164	LGS, LED array	GI
	DLZ...22	50.04.2150	MV 57164	LGS, LED array	GI
	DLZ...23	50.04.2150	MV 57164	LGS, LED array	GI
	DLZ...24	50.04.2150	MV 57164	LGS, LED array	GI
	DLZ...25	50.04.2150	MV 57164	LGS, LED array	GI
	DLZ...26	50.04.2150	MV 57164	LGS, LED array	GI
	DLZ...27	50.04.2150	MV 57164	LGS, LED array	GI

STUDER (00) 86/10/03 PB BARGRAPH BOARD 8 CH 1.820.736.00 PAGE 2

IND.	POS.NO.	PART NO.	VALUE	SPECIFICATIONS / EQUIVALENT	MANUF.
	DLZ...28	50.04.2150	MV 57164	LGS, LED array	GI
	DLZ...29	50.04.2150	MV 57164	LGS, LED array	GI
	DLZ...30	50.04.2150	MV 57164	LGS, LED array	GI
	DLZ...31	50.04.2150	MV 57164	LGS, LED array	GI
	DLZ...32	50.04.2150	MV 57164	LGS, LED array	GI
	DLZ...33	50.04.2150	MV 57164	LGS, LED array	GI
	DLZ...34	50.04.2150	MV 57164	LGS, LED array	GI
	DLZ...35	50.04.2150	MV 57164	LGS, LED array	GI
	DLZ...36	50.04.2150	MV 57164	LGS, LED array	GI
	DLZ...37	50.04.2150	MV 57164	LGS, LED array	GI
	DLZ...38	50.04.2150	MV 57164	LGS, LED array	GI
	DLZ...39	50.04.2150	MV 57164	LGS, LED array	GI
	DLZ...40	50.04.2150	MV 57164	LGS, LED array	GI
	IC....1	50.17.1374	74 HC 374		Mot,NS,Ph,RCA,SGS,TI,To
	IC....2	50.07.0035	ICM 7218		Is+Ma
	IC....3	50.07.0035	ICM 7218		Is+Ma
	IC....4	50.07.0035	ICM 7218		Is+Ma
	IC....5	50.07.0035	ICM 7218		Is+Ma
	IC....6	50.07.0035	ICM 7218		Is+Ma
	IC....7	50.07.0035	ICM 7218		Is+Ma
	IC....8	50.07.0035	ICM 7218		Is+Ma
	IC....9	50.07.0035	ICM 7218		Is+Ma
	JS....1			see note 1	
	P.....1	54.14.2003		see note 2	

STUDER (00) 86/10/03 PB BARGRAPH BOARD 8 CH 1.820.736.00 PAGE 3

IND.	POS.NO.	PART NO.	VALUE	SPECIFICATIONS / EQUIVALENT	MANUF.
	C.....1	59.06.0683	68 nF	10%	
	C.....2	59.26.1100	10 uF	20%, 10V	
	C.....3	59.29.1.102	1000 uF	10%, 6.3V	
	C.....4	59.06.0683	68 nF	10%	
	C.....5	59.06.0683	68 nF	10%	
	C.....6	59.06.0683	68 nF	10%	
	C.....7	59.06.0683	68 nF	10%	
	C.....8	59.06.0683	68 nF	10%	
	C.....9	59.06.0683	68 nF	10%	
	C.....10	59.06.0683	68 nF	10%	
	C.....11	59.06.0683	68 nF	10%	
	C.....12	59.06.0683	68 nF	10%	
	C.....13	59.06.0683	68 nF	10%	
	C.....14	59.06.0683	68 nF	10%	
	C.....15	59.06.0683	68 nF	10%	
	C.....16	59.06.0683	68 nF	10%	
	C.....17	59.06.0683	68 nF	10%	
	C.....18	59.06.0683	68 nF	10%	
	C.....19	59.06.0683	68 nF	10%	
	D.....1	50.04.0512	1N 5818	1N 5819	Mot
	DL....1	50.04.2129	LS3160-HL	Q 62 703-Q 1304	Sie
	DL....2	50.04.2129	LS3160-HL	Q 62 703-Q 1304	Sie
	DL....3	50.04.2129	LS3160-HL	Q 62 703-Q 1304	Sie
	DL....4	50.04.2129	LS3160-HL	Q 62 703-Q 1304	Sie
	DL....5	50.04.2129	LS3160-HL	Q 62 703-Q 1304	Sie
	DL....6	50.04.2129	LS3160-HL	Q 62 703-Q 1304	Sie
	DL....7	50.04.2129	LS3160-HL	Q 62 703-Q 1304	Sie
	DL....8	50.04.2129	LS3160-HL	Q 62 703-Q 1304	Sie
	DL....9	50.04.2129	LS3160-HL	Q 62 703-Q 1304	Sie
	DL....10	50.04.2129	LS3160-HL	Q 62 703-Q 1304	Sie
	DL....11	50.04.2129	LS3160-HL	Q 62 703-Q 1304	Sie
	DL....12	50.04.2129	LS3160-HL	Q 62 703-Q 1304	Sie
	DL....13	50.04.2129	LS3160-HL	Q 62 703-Q 1304	Sie
	DL....14	50.04.2129	LS3160-HL	Q 62 703-Q 1304	Sie
	DL....15	50.04.2129	LS3160-HL	Q 62 703-Q 1304	Sie

STUDER (00) 86/10/03 PB BARGRAPH BOARD 8 CH 1.820.736.00 PAGE 1

IND.	POS.NO.	PART NO.	VALUE	SPECIFICATIONS / EQUIVALENT	MANUF.
	Note 1 - Contact Pin (6 pieces):				
			Studer		54.01.0020
			Berg		75 160-102-36
			Philips		2422 025 89303
		Bridge:	Studer		54.01.0021
			Berg		65 474-001
			Philips		2422 024 88003
	Note 2 - Connector, 26 contacts:				
			Yamaichi nr.		FAP-26-08-4055
			Burndy nr.		BPH 9 826 800 GS
			3M nr.		7626-6002 VZ
	MANUFACTURER: GI=General Instruments, Is=Intersil, Ma=Maxim, Mot=Motorola, NS=National Semiconductors, Ph=Philips, RCA=RCA Corporation of America, SGS=SGS/Ates, Sie=Siemens, TI=Texas Instruments, To=Toshiba.				
	ORIG 86/10/03				

STUDER (00) 86/10/03 PB BARGRAPH BOARD 8 CH 1.820.736.00 PAGE 4

8 CHANNEL KEY BOARD DRIVER 1.820.709.00

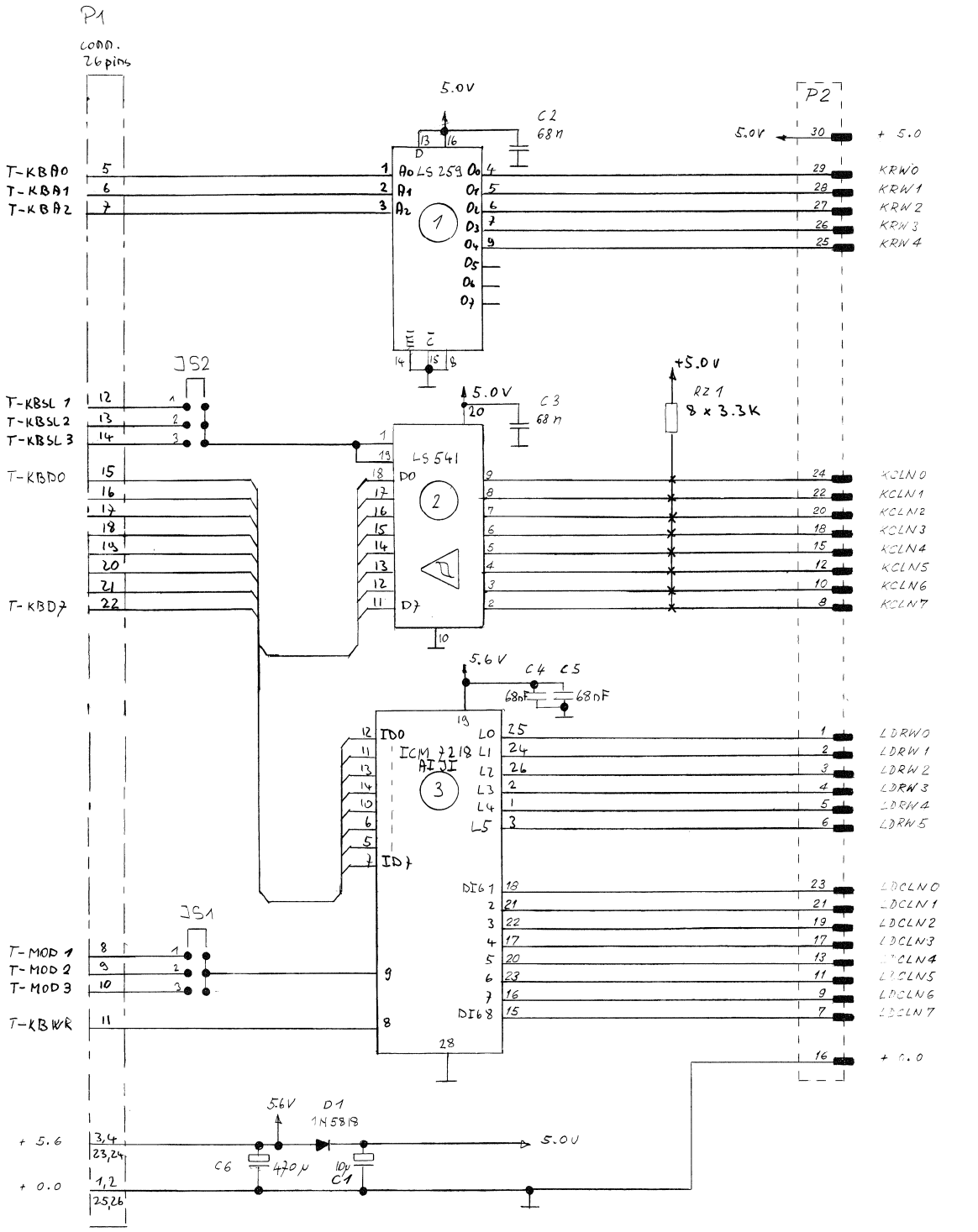

	6.11.86				
STUDER	8 CHANNEL KEY BOARD DRIVER	SC	1.820.709-00	PAGE 1	OF 1

8 CHANNEL KEY BOARD DRIVER 1.820.709.00

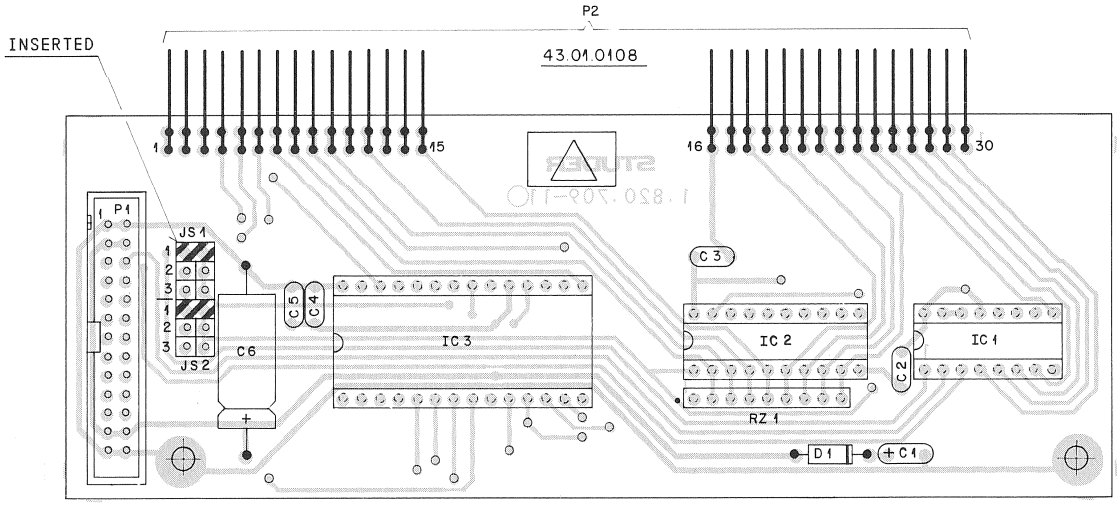

IND.	POS.NO.	PART NO.	VALUE	SPECIFICATIONS / EQUIVALENT	MANUF.
	C.....1	59.26.1100	10 uF	20%, 10V	
	C.....2	59.06.0683	68 nF	10%	
	C.....3	59.06.0683	68 nF	10%	
	C.....4	59.06.0683	68 nF	10%	
	C.....5	59.06.0683	68 nF	10%	
	C.....6	59.25.1471	470 uF	10%, 6V	
	D.....1	50.04.0512	1N 5818	1N 5819	Mot
	IC....1	50.17.1259	74 HC 259		Mot,NS,Ph,RCA,SGS,TI,To
	IC....2	50.17.1541	74 HC 541		Mot,NS,Ph,RCA,SGS,TI,To
	IC....3	50.07.0035	ICM 7218		Is,Ma
	JS....1			see note 1	
	JS....2			see note 1	
	P.....1	54.14.2003		see note 2	
	P.....2			see note 3	
	RZ....1	57.88.4332		see note 4	

IND.	POS.NO.	PART NO.	VALUE	SPECIFICATIONS / EQUIVALENT	MANUF.
Note 1 - Contact pin (6 pieces):			Studer nr.	54.01.0020	
			Berg nr.	75 160-102-36	
			Philips nr.	2422 025 89303	
Bridge (1 piece):			Studer nr.	54.01.0021	
			Berg nr.	65 474-001	
			Philips nr.	2422 024 88003	
Note 3 - Connector, 30 contacts:					
2 pieces with 7 pins:			Studer nr.	54.01.0427	
			AMP nr.	164.382-5	
2 pieces with 8 pins:			Studer nr.	54.01.0428	
			AMP nr.	164.382-6	
Note 2 - Connector, 26 contacts:			Yamaichi nr.	FAP-26-08-4055	
			Burndy nr.	BPH 9 B26 B00 GS	
			3M nr.	7626-6002 VZ	
Note 4 - Network 8 * 3.3 kOhm, 5%, single line:					
			Sicovend nr.	C09 X 3.3 K J	
			Ineltro nr.	R88 3.3 K 5%	

MANUFACTURER : Is=Intersil, Ma=Maxim, Mot=Motorola,
NS=National Semiconductors, Ph=Philips,
RCA=RCA Corporation of America, SGS=SGS/Ates,
TI=Texas Instruments, To=Toshiba,

ORIG 86/09/10

8 CHANNEL CONTROL KEY BOARD 1.820.708.00

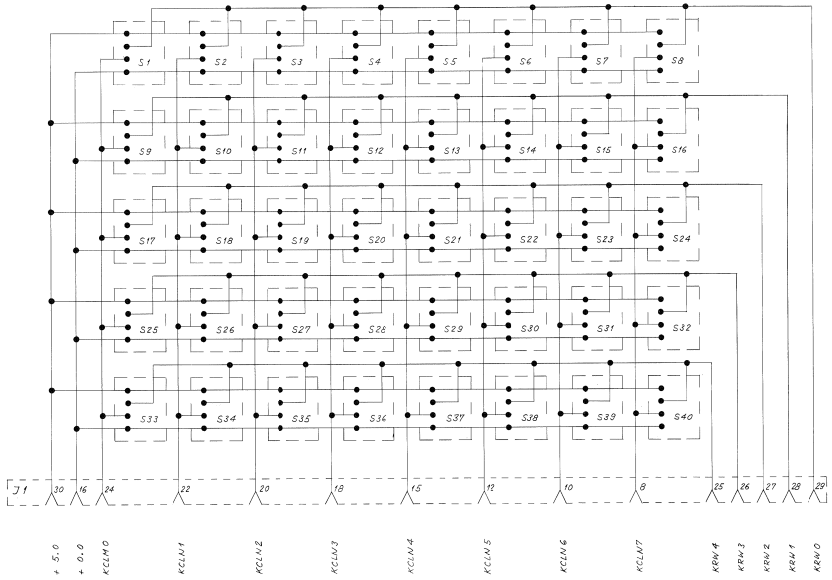

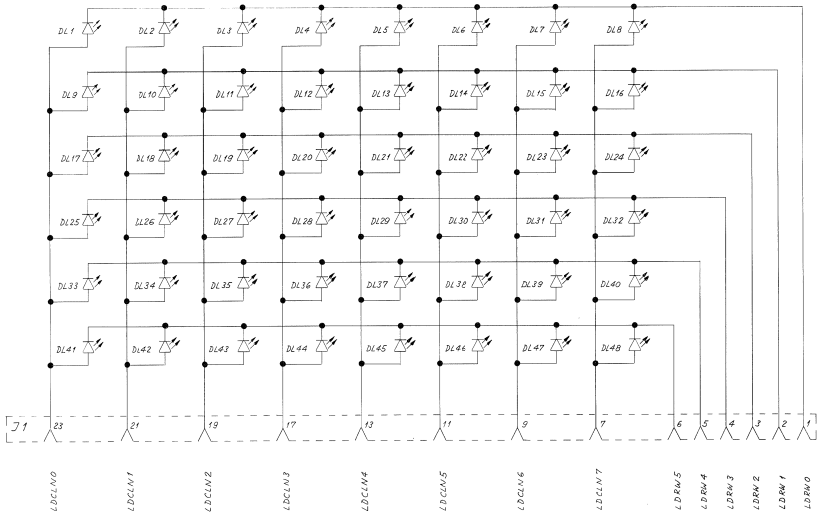

0 6.11.86 Zuchegger					PAGE 1 OF 1
STUDER	8 CHANNEL CONTROL KEY BOARD			SC	1.820.708-00

8 CHANNEL CONTROL KEY BOARD 1.820.708.00

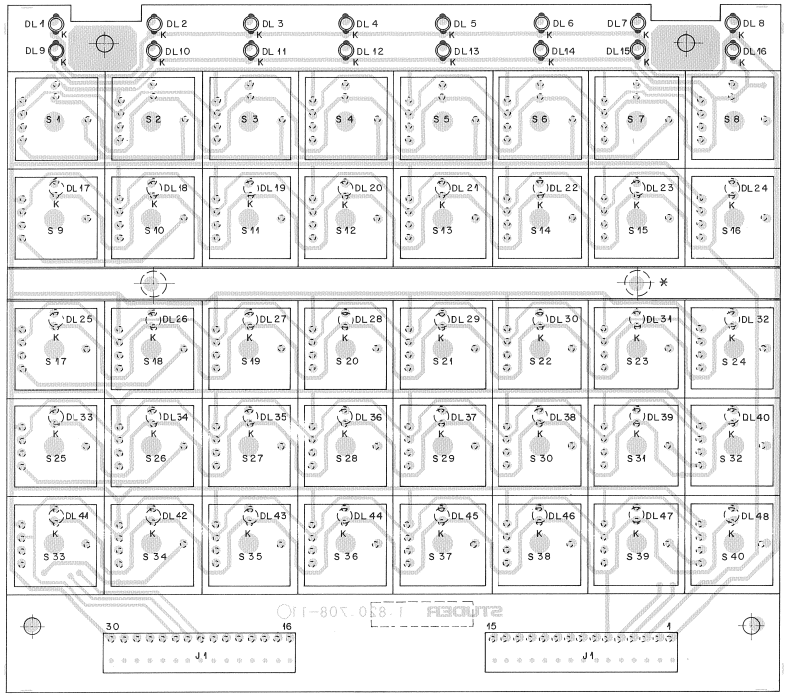

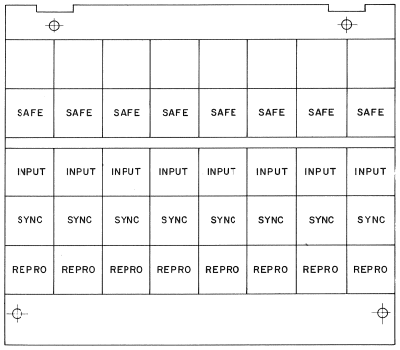

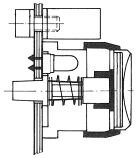

K = Kathode
DL 1 ÷ DL 16

IND.	POS.NO.	PART NO.	VALUE	SPECIFICATIONS / EQUIVALENT	MANUF.
	DL...38	50.04.2152	HLMP-1440		HP
	DL...39	50.04.2152	HLMP-1440		HP
	DL...40	50.04.2152	HLMP-1440		HP
	DL...41	50.04.2152	HLMP-1440		HP
	DL...42	50.04.2152	HLMP-1440		HP
	DL...43	50.04.2152	HLMP-1440		HP
	DL...44	50.04.2152	HLMP-1440		HP
	DL...45	50.04.2152	HLMP-1440		HP
	DL...46	50.04.2152	HLMP-1440		HP
	DL...47	50.04.2152	HLMP-1440		HP
	DL...48	50.04.2152	HLMP-1440		HP
	J.....1	54.01.0245	30 cont.	AMP nr. 1-163.681-4 (2 pieces)	
	S.....1	55.03.0261	TTL-switch	1 * open collector, Rafi nr. 3.13001.110	
	S.....2	55.03.0261	TTL-switch	1 * open collector, Rafi nr. 3.13001.110	
	S.....3	55.03.0261	TTL-switch	1 * open collector, Rafi nr. 3.13001.110	
	S.....4	55.03.0261	TTL-switch	1 * open collector, Rafi nr. 3.13001.110	
	S.....5	55.03.0261	TTL-switch	1 * open collector, Rafi nr. 3.13001.110	
	S.....6	55.03.0261	TTL-switch	1 * open collector, Rafi nr. 3.13001.110	
	S.....7	55.03.0261	TTL-switch	1 * open collector, Rafi nr. 3.13001.110	
	S.....8	55.03.0261	TTL-switch	1 * open collector, Rafi nr. 3.13001.110	
	S.....9	55.03.0261	TTL-switch	1 * open collector, Rafi nr. 3.13001.110	
	S....10	55.03.0261	TTL-switch	1 * open collector, Rafi nr. 3.13001.110	
	S....11	55.03.0261	TTL-switch	1 * open collector, Rafi nr. 3.13001.110	
	S....12	55.03.0261	TTL-switch	1 * open collector, Rafi nr. 3.13001.110	
	S....13	55.03.0261	TTL-switch	1 * open collector, Rafi nr. 3.13001.110	
	S....14	55.03.0261	TTL-switch	1 * open collector, Rafi nr. 3.13001.110	
	S....15	55.03.0261	TTL-switch	1 * open collector, Rafi nr. 3.13001.110	
	S....16	55.03.0261	TTL-switch	1 * open collector, Rafi nr. 3.13001.110	
	S....17	55.03.0261	TTL-switch	1 * open collector, Rafi nr. 3.13001.110	
	S....18	55.03.0261	TTL-switch	1 * open collector, Rafi nr. 3.13001.110	
	S....19	55.03.0261	TTL-switch	1 * open collector, Rafi nr. 3.13001.110	
	S....20	55.03.0261	TTL-switch	1 * open collector, Rafi nr. 3.13001.110	
	S....21	55.03.0261	TTL-switch	1 * open collector, Rafi nr. 3.13001.110	
	S....22	55.03.0261	TTL-switch	1 * open collector, Rafi nr. 3.13001.110	
	S....23	55.03.0261	TTL-switch	1 * open collector, Rafi nr. 3.13001.110	

IND.	POS.NO.	PART NO.	VALUE	SPECIFICATIONS / EQUIVALENT	MANUF.
	S....24	55.03.0261	TTL-switch	1 * open collector, Rafi nr. 3.13001.110	
	S....25	55.03.0261	TTL-switch	1 * open collector, Rafi nr. 3.13001.110	
	S....26	55.03.0261	TTL-switch	1 * open collector, Rafi nr. 3.13001.110	
	S....27	55.03.0261	TTL-switch	1 * open collector, Rafi nr. 3.13001.110	
	S....28	55.03.0261	TTL-switch	1 * open collector, Rafi nr. 3.13001.110	
	S....29	55.03.0261	TTL-switch	1 * open collector, Rafi nr. 3.13001.110	
	S....30	55.03.0261	TTL-switch	1 * open collector, Rafi nr. 3.13001.110	
	S....31	55.03.0261	TTL-switch	1 * open collector, Rafi nr. 3.13001.110	
	S....32	55.03.0261	TTL-switch	1 * open collector, Rafi nr. 3.13001.110	
	S....33	55.03.0261	TTL-switch	1 * open collector, Rafi nr. 3.13001.110	
	S....34	55.03.0261	TTL-switch	1 * open collector, Rafi nr. 3.13001.110	
	S....35	55.03.0261	TTL-switch	1 * open collector, Rafi nr. 3.13001.110	
	S....36	55.03.0261	TTL-switch	1 * open collector, Rafi nr. 3.13001.110	
	S....37	55.03.0261	TTL-switch	1 * open collector, Rafi nr. 3.13001.110	
	S....38	55.03.0261	TTL-switch	1 * open collector, Rafi nr. 3.13001.110	
	S....39	55.03.0261	TTL-switch	1 * open collector, Rafi nr. 3.13001.110	
	S....40	55.03.0261	TTL-switch	1 * open collector, Rafi nr. 3.13001.110	
	SMP...1	55.03.0372	see note 1	Colourfield, green, without LED opening	
	SMP...2	55.03.0372	see note 1	Colourfield, green, without LED opening	
	SMP...3	55.03.0372	see note 1	Colourfield, green, without LED opening	
	SMP...4	55.03.0372	see note 1	Colourfield, green, without LED opening	
	SMP...5	55.03.0372	see note 1	Colourfield, green, without LED opening	
	SMP...6	55.03.0372	see note 1	Colourfield, green, without LED opening	
	SMP...7	55.03.0372	see note 1	Colourfield, green, without LED opening	
	SMP...8	55.03.0372	see note 1	Colourfield, green, without LED opening	
	SMP...9	55.03.0385		Colourfield, grey, with LED opening	
	SMP..10	55.03.0385		Colourfield, grey, with LED opening	
	SMP..11	55.03.0385		Colourfield, grey, with LED opening	
	SMP..12	55.03.0385		Colourfield, grey, with LED opening	
	SMP..13	55.03.0385		Colourfield, grey, with LED opening	
	SMP..14	55.03.0385		Colourfield, grey, with LED opening	
	SMP..15	55.03.0385		Colourfield, grey, with LED opening	
	SMP..16	55.03.0385		Colourfield, grey, with LED opening	
	SMP..17	55.03.0380		Colourfield, blue, with LED opening	
	SMP..18	55.03.0380		Colourfield, blue, with LED opening	
	SMP..19	55.03.0380		Colourfield, blue, with LED opening	

IND.	POS.NO.	PART NO.	VALUE	SPECIFICATIONS / EQUIVALENT	MANUF.
	DL....1	50.04.2129	LS3160-ML		Sie
	DL....2	50.04.2129	LS3160-ML		Sie
	DL....3	50.04.2129	LS3160-ML		Sie
	DL....4	50.04.2129	LS3160-ML		Sie
	DL....5	50.04.2129	LS3160-ML		Sie
	DL....6	50.04.2129	LS3160-ML		Sie
	DL....7	50.04.2129	LS3160-ML		Sie
	DL....8	50.04.2129	LS3160-ML		Sie
	DL....9	50.04.2131	LG3160-GK		Sie
	DL...10	50.04.2131	LG3160-GK		Sie
	DL...11	50.04.2131	LG3160-GK		Sie
	DL...12	50.04.2131	LG3160-GK		Sie
	DL...13	50.04.2131	LG3160-GK		Sie
	DL...14	50.04.2131	LG3160-GK		Sie
	DL...15	50.04.2131	LG3160-GK		Sie
	DL...16	50.04.2131	LG3160-GK		Sie
	DL...17	50.04.2152	HLMP-1440		HP
	DL...18	50.04.2152	HLMP-1440		HP
	DL...19	50.04.2152	HLMP-1440		HP
	DL...20	50.04.2152	HLMP-1440		HP
	DL...21	50.04.2152	HLMP-1440		HP
	DL...22	50.04.2152	HLMP-1440		HP
	DL...23	50.04.2152	HLMP-1440		HP
	DL...24	50.04.2152	HLMP-1440		HP
	DL...25	50.04.2152	HLMP-1440		HP
	DL...26	50.04.2152	HLMP-1440		HP
	DL...27	50.04.2152	HLMP-1440		HP
	DL...28	50.04.2152	HLMP-1440		HP
	DL...29	50.04.2152	HLMP-1440		HP
	DL...30	50.04.2152	HLMP-1440		HP
	DL...31	50.04.2152	HLMP-1440		HP
	DL...32	50.04.2152	HLMP-1440		HP
	DL...33	50.04.2152	HLMP-1440		HP
	DL...34	50.04.2152	HLMP-1440		HP
	DL...35	50.04.2152	HLMP-1440		HP
	DL...36	50.04.2152	HLMP-1440		HP
	DL...37	50.04.2152	HLMP-1440		HP

IND.	POS.NO.	PART NO.	VALUE	SPECIFICATIONS / EQUIVALENT	MANUF.
	SMP..20	55.03.0380		Colourfield, blue, with LED opening	
	SMP..21	55.03.0380		Colourfield, blue, with LED opening	
	SMP..22	55.03.0380		Colourfield, blue, with LED opening	
	SMP..23	55.03.0380		Colourfield, blue, with LED opening	
	SMP..24	55.03.0380		Colourfield, blue, with LED opening	
	SMP..25	55.03.0381		Colourfield, yellow, with LED opening	
	SMP..26	55.03.0381		Colourfield, yellow, with LED opening	
	SMP..27	55.03.0381		Colourfield, yellow, with LED opening	
	SMP..28	55.03.0381		Colourfield, yellow, with LED opening	
	SMP..29	55.03.0381		Colourfield, yellow, with LED opening	
	SMP..30	55.03.0381		Colourfield, yellow, with LED opening	
	SMP..31	55.03.0381		Colourfield, yellow, with LED opening	
	SMP..32	55.03.0381		Colourfield, yellow, with LED opening	
	SMP..33	55.03.0384		Colourfield, white, with LED opening	
	SMP..34	55.03.0384		Colourfield, white, with LED opening	
	SMP..35	55.03.0384		Colourfield, white, with LED opening	
	SMP..36	55.03.0384		Colourfield, white, with LED opening	
	SMP..37	55.03.0384		Colourfield, white, with LED opening	
	SMP..38	55.03.0384		Colourfield, white, with LED opening	
	SMP..39	55.03.0384		Colourfield, white, with LED opening	
	SMP..40	55.03.0384		Colourfield, white, with LED opening	

Note 1 - SMP assembled only when keyboard applied in VU panel.

MANUFACTURER : HP=Hewlett Packard, Sie=Siemens.

ORIG 86/11/03

MASTER KEYBOARD AUDIO 1.820.817.00

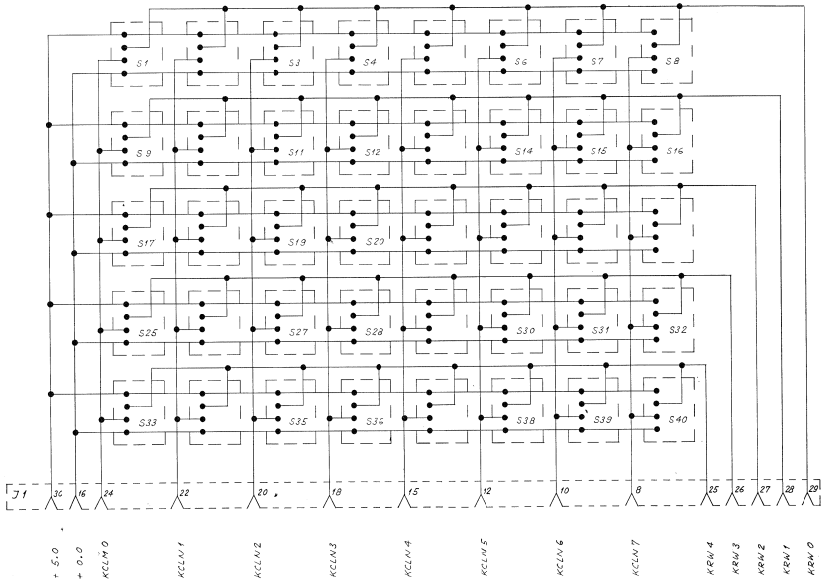

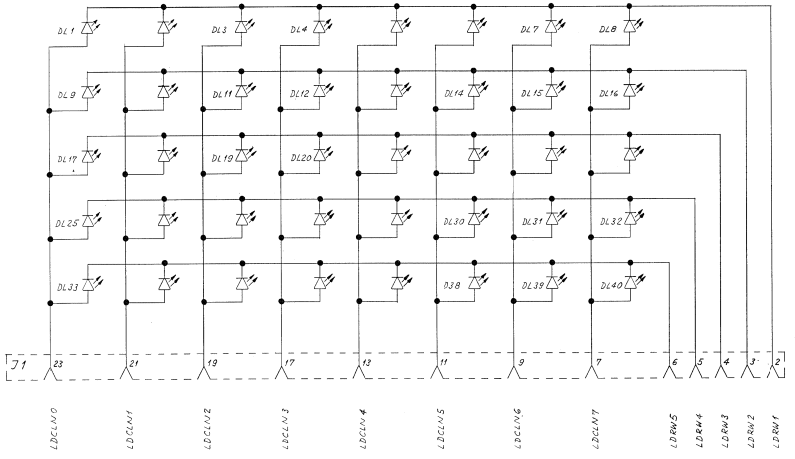

0 6.11.96 Birchmeier				PAGE 1 OF 1
STUDER	MASTER KEYBOARD AUDIO		SC	1.820.817-00

MASTER KEYBOARD AUDIO 1.820.817.00

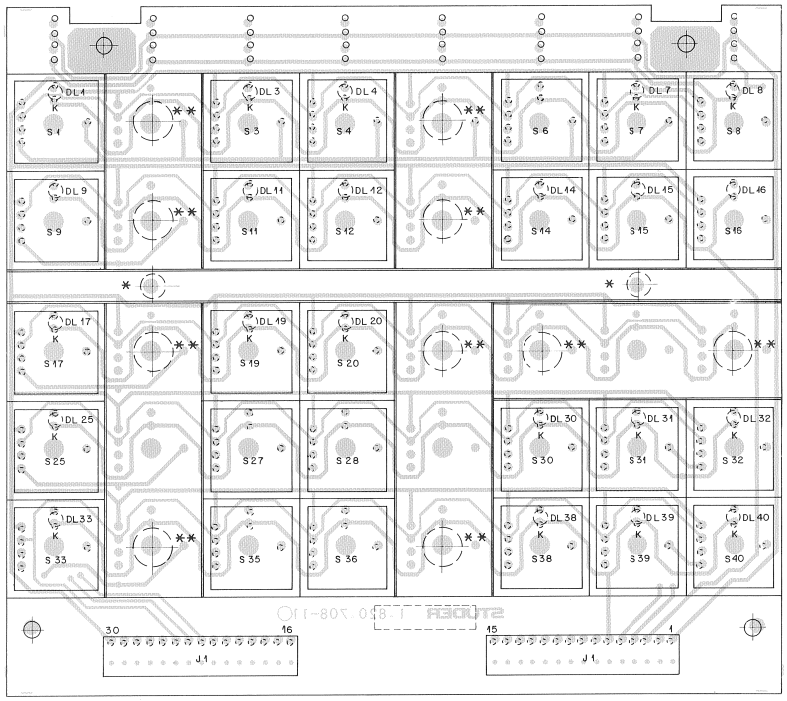

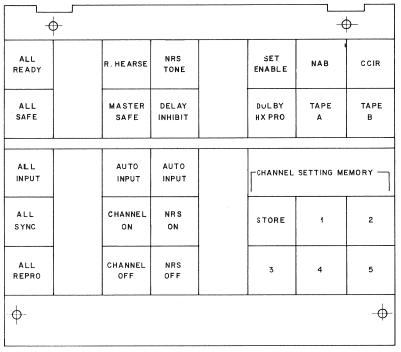

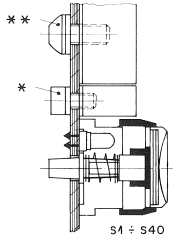

K = Kathode
DL 1÷ DL 40

IND.	POS.NO.	PART NO.	VALUE	SPECIFICATIONS / EQUIVALENT	MANUF.
	DL...38	50.04.2152	HLMP-1440		HP
	DL...39	50.04.2152	HLMP-1440		HP
	DL...40	50.04.2152	HLMP-1440		HP
	J.....1	54.01.0245	30 cont.	AMP nr. 1-163.681-4 (2 pieces)	
	S.....1	55.03.0261	TTL-switch	1 * open collector, Rafi nr. 3.13001.110	
	S.....2		not used		
	S.....3	55.03.0261	TTL-switch	1 * open collector, Rafi nr. 3.13001.110	
	S.....4	55.03.0261	TTL-switch	1 * open collector, Rafi nr. 3.13001.110	
	S.....5		not used		
	S.....6	55.03.0261	TTL-switch	1 * open collector, Rafi nr. 3.13001.110	
	S.....7	55.03.0261	TTL-switch	1 * open collector, Rafi nr. 3.13001.110	
	S.....8	55.03.0261	TTL-switch	1 * open collector, Rafi nr. 3.13001.110	
	S.....9	55.03.0261	TTL-switch	1 * open collector, Rafi nr. 3.13001.110	
	S....10		not used		
	S....11	55.03.0261	TTL-switch	1 * open collector, Rafi nr. 3.13001.110	
	S....12	55.03.0261	TTL-switch	1 * open collector, Rafi nr. 3.13001.110	
	S....13		not used		
	S....14	55.03.0261	TTL-switch	1 * open collector, Rafi nr. 3.13001.110	
	S....15	55.03.0261	TTL-switch	1 * open collector, Rafi nr. 3.13001.110	
	S....16	55.03.0261	TTL-switch	1 * open collector, Rafi nr. 3.13001.110	
	S....17	55.03.0261	TTL-switch	1 * open collector, Rafi nr. 3.13001.110	
	S....18		not used		
	S....19	55.03.0261	TTL-switch	1 * open collector, Rafi nr. 3.13001.110	
	S....20	55.03.0261	TTL-switch	1 * open collector, Rafi nr. 3.13001.110	
	S....21		not used		
	S....22		not used		
	S....23		not used		
	S....24		not used		
	S....25	55.03.0261	TTL-switch	1 * open collector, Rafi nr. 3.13001.110	
	S....26		not used		
	S....27	55.03.0261	TTL-switch	1 * open collector, Rafi nr. 3.13001.110	
	S....28	55.03.0261	TTL-switch	1 * open collector, Rafi nr. 3.13001.110	
	S....29		not used		
	S....30	55.03.0261	TTL-switch	1 * open collector, Rafi nr. 3.13001.110	
	S....31	55.03.0261	TTL-switch	1 * open collector, Rafi nr. 3.13001.110	

IND.	POS.NO.	PART NO.	VALUE	SPECIFICATIONS / EQUIVALENT	MANUF.
	S....32	55.03.0261	TTL-switch	1 * open collector, Rafi nr. 3.13001.110	
	S....33	55.03.0261	TTL-switch	1 * open collector, Rafi nr. 3.13001.110	
	S....34		not used		
	S....35	55.03.0261	TTL-switch	1 * open collector, Rafi nr. 3.13001.110	
	S....36	55.03.0261	TTL-switch	1 * open collector, Rafi nr. 3.13001.110	
	S....37		not used		
	S....38	55.03.0261	TTL-switch	1 * open collector, Rafi nr. 3.13001.110	
	S....39	55.03.0261	TTL-switch	1 * open collector, Rafi nr. 3.13001.110	
	S....40	55.03.0261	TTL-switch	1 * open collector, Rafi nr. 3.13001.110	
	SMP...1	55.03.0382		Colourfield, green, with LED opening	
	SMP...2		not used		
	SMP...3	55.03.0384		Colourfield, white, with LED opening	
	SMP...4	55.03.0384		Colourfield, white, with LED opening	
	SMP...5		not used		
	SMP...6	55.03.0374		Colourfield, white, without LED opening	
	SMP...7	55.03.0384		Colourfield, white, with LED opening	
	SMP...8	55.03.0384		Colourfield, white, with LED opening	
	SMP...9	55.03.0385		Colourfield, grey, with LED opening	
	SMP..10		not used		
	SMP..11	55.03.0384		Colourfield, white, with LED opening	
	SMP..12	55.03.0384		Colourfield, white, with LED opening	
	SMP..13		not used		
	SMP..14	55.03.0384		Colourfield, white, with LED opening	
	SMP..15	55.03.0384		Colourfield, white, with LED opening	
	SMP..16	55.03.0384		Colourfield, white, with LED opening	
	SMP..17	55.03.0380		Colourfield, blue, with LED opening	
	SMP..18		not used		
	SMP..19	55.03.0384		Colourfield, white, with LED opening	
	SMP..20	55.03.0384		Colourfield, white, with LED opening	
	SMP..21		not used		
	SMP..22		not used		
	SMP..23		not used		
	SMP..24		not used		
	SMP..25	55.03.0381		Colourfield, yellow, with LED opening	
	SMP..26		not used		
	SMP..27	55.03.0374		Colourfield, white, without LED opening	

IND.	POS.NO.	PART NO.	VALUE	SPECIFICATIONS / EQUIVALENT	MANUF.
	DL....1	50.04.2152	HLMP-1440		HP
	DL....2		not used		
	DL....3	50.04.2152	HLMP-1440		HP
	DL....4	50.04.2152	HLMP-1440		HP
	DL....5		not used		
	DL....6		not used		
	DL....7	50.04.2152	HLMP-1440		HP
	DL....8	50.04.2152	HLMP-1440		HP
	DL....9	50.04.2152	HLMP-1440		HP
	DL...10		not used		
	DL...11	50.04.2152	HLMP-1440		HP
	DL...12	50.04.2152	HLMP-1440		HP
	DL...13		not used		
	DL...14	50.04.2152	HLMP-1440		HP
	DL...15	50.04.2152	HLMP-1440		HP
	DL...16	50.04.2152	HLMP-1440		HP
	DL...17	50.04.2152	HLMP-1440		HP
	DL...18		not used		
	DL...19	50.04.2152	HLMP-1440		HP
	DL...20	50.04.2152	HLMP-1440		HP
	DL...21		not used		
	DL...22		not used		
	DL...23		not used		
	DL...24		not used		
	DL...25	50.04.2152	HLMP-1440		HP
	DL...26		not used		
	DL...27		not used		
	DL...28		not used		
	DL...29		not used		
	DL...30	50.04.2152	HLMP-1440		HP
	DL...31	50.04.2152	HLMP-1440		HP
	DL...32	50.04.2152	HLMP-1440		HP
	DL...33	50.04.2152	HLMP-1440		HP
	DL...34		not used		
	DL...35		not used		
	DL...36		not used		
	DL...37		not used		

IND.	POS.NO.	PART NO.	VALUE	SPECIFICATIONS / EQUIVALENT	MANUF.
	SMP..28	55.03.0374		Colourfield, white, without LED opening	
	SMP..29		not used		
	SMP..30	55.03.0384		Colourfield, white, with LED opening	
	SMP..31	55.03.0384		Colourfield, white, with LED opening	
	SMP..32	55.03.0384		Colourfield, white, with LED opening	
	SMP..33	55.03.0384		Colourfield, white, with LED opening	
	SMP..34		not used		
	SMP..35	55.03.0374		Colourfield, white, without LED opening	
	SMP..36	55.03.0374		Colourfield, white, without LED opening	
	SMP..37		not used		
	SMP..38	55.03.0384		Colourfield, white, with LED opening	
	SMP..39	55.03.0384		Colourfield, white, with LED opening	
	SMP..40	55.03.0384		Colourfield, white, with LED opening	

MANUFACTURER: HP=Hewlett Packard.

ORIG 86/11/03

AUDIO ALIGNMENT KEY BOARD 1.820.707.00

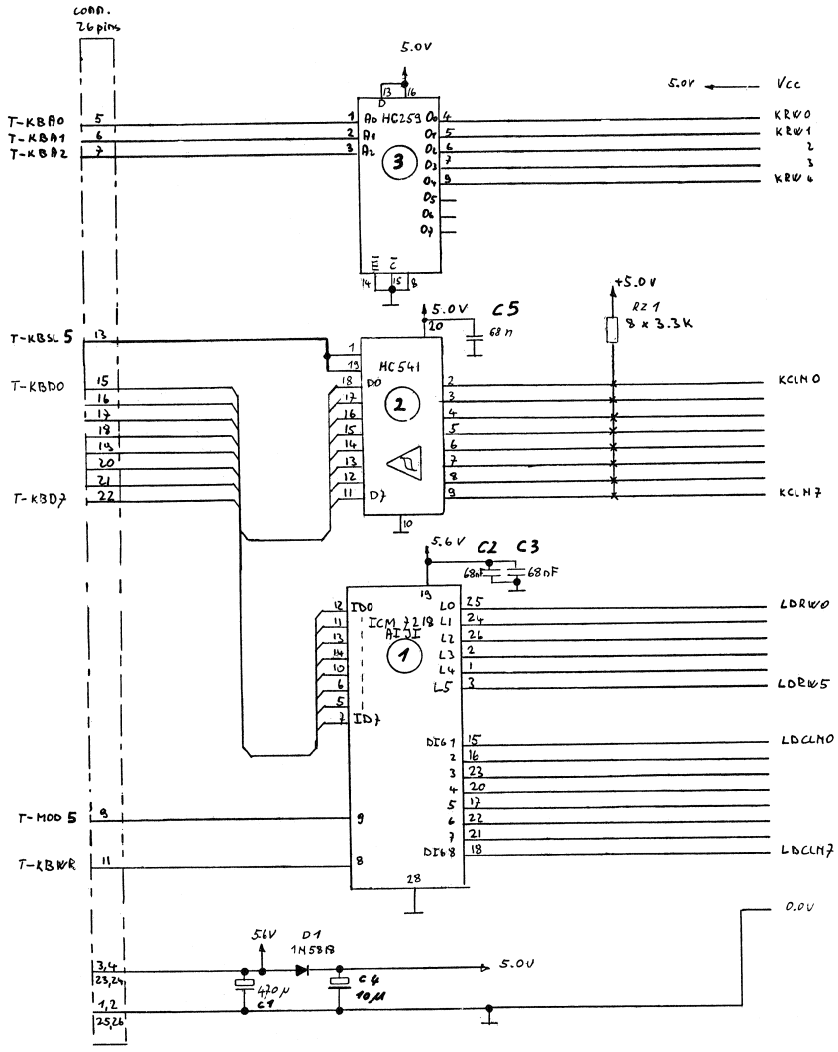

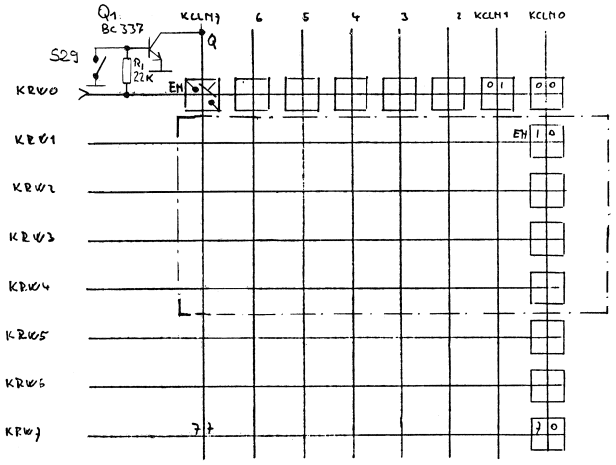

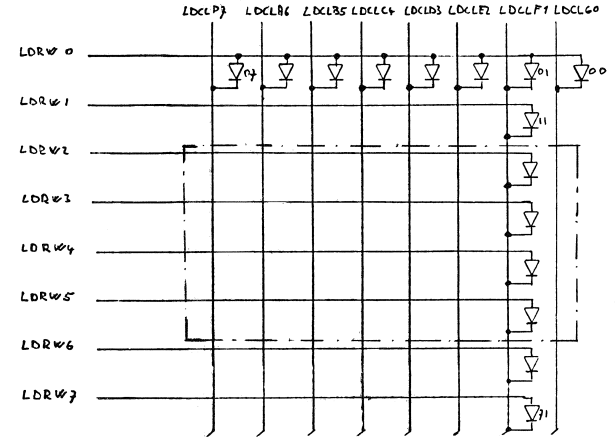

	12.02.85	Martinelli F.	3.10.86		
STUDER	AUDIO ALIGNMENT KEY BOARD	SC	1.820.707-00	PAGE	1 OF 1

AUDIO ALIGNMENT KEY BOARD 1.820.707.00

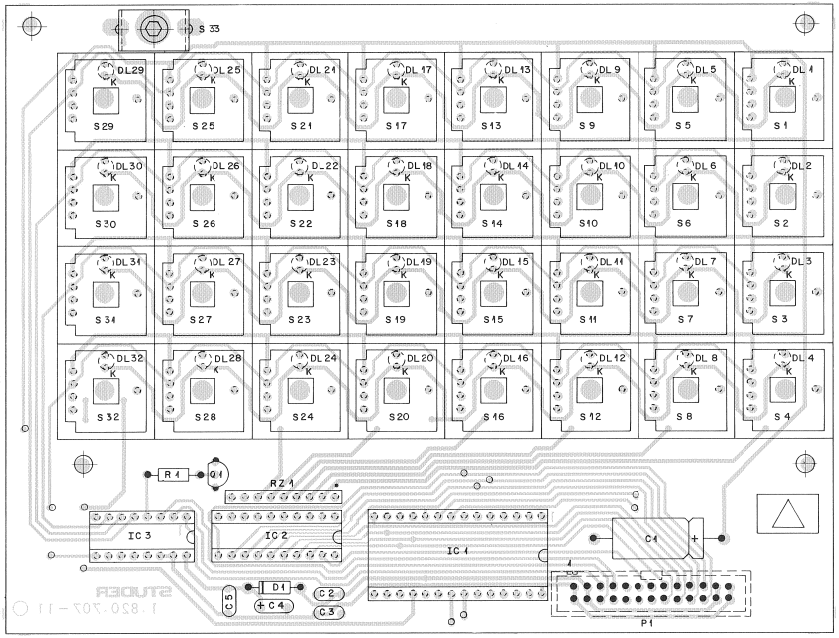

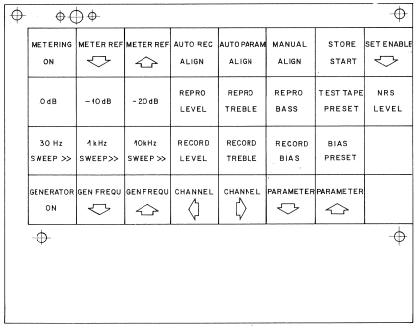

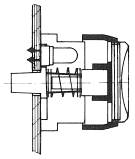

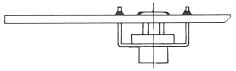

K = Kathode

DL 1 ÷ DL 32

IND.	POS.NO.	PART NO.	VALUE	SPECIFICATIONS / EQUIVALENT	MANUF.
	DL...30	50.04.2152	HLMP-1440		HP
	DL...31	50.04.2152	HLMP-1440		HP
	DL...32	50.04.2152	HLMP-1440		HP
	IC....1	50.07.0035	ICM 7218		Is+Ma
	IC....2	50.17.1541	74 HC 541		Mot,NS,Ph+RCA,SGS.Ti+To
	IC....3	50.17.1259	74 HC 259		Mot,NS,Ph+RCA,SGS.Ti+To
	P.....1	54.14.2003		see note 1	
	Q.....1	50.03.0340	BC 337 B		
	R.....1	57.11.4223	22kOhm	2%	
	RZ....1	57.88.4332		see note 2	
	S.....1	55.03.0261	TTL-switch	1 ¤ open collector, Rafi nr. 3.13001.10	
	S.....2	55.03.0261	TTL-switch	1 ¤ open collector, Rafi nr. 3.13001.10	
	S.....3	55.03.0261	TTL-switch	1 ¤ open collector, Rafi nr. 3.13001.10	
	S.....4	55.03.0261	TTL-switch	1 ¤ open collector, Rafi nr. 3.13001.10	
	S.....5	55.03.0261	TTL-switch	1 ¤ open collector, Rafi nr. 3.13001.10	
	S.....6	55.03.0261	TTL-switch	1 ¤ open collector, Rafi nr. 3.13001.10	
	S.....7	55.03.0261	TTL-switch	1 ¤ open collector, Rafi nr. 3.13001.10	
	S.....8	55.03.0261	TTL-switch	1 ¤ open collector, Rafi nr. 3.13001.10	
	S.....9	55.03.0261	TTL-switch	1 ¤ open collector, Rafi nr. 3.13001.10	
	S....10	55.03.0261	TTL-switch	1 ¤ open collector, Rafi nr. 3.13001.10	
	S....11	55.03.0261	TTL-switch	1 ¤ open collector, Rafi nr. 3.13001.10	
	S....12	55.03.0261	TTL-switch	1 ¤ open collector, Rafi nr. 3.13001.10	
	S....13	55.03.0261	TTL-switch	1 ¤ open collector, Rafi nr. 3.13001.10	
	S....14	55.03.0261	TTL-switch	1 ¤ open collector, Rafi nr. 3.13001.10	
	S....15	55.03.0261	TTL-switch	1 ¤ open collector, Rafi nr. 3.13001.10	
	S....16	55.03.0261	TTL-switch	1 ¤ open collector, Rafi nr. 3.13001.10	
	S....17	55.03.0261	TTL-switch	1 ¤ open collector, Rafi nr. 3.13001.10	
	S....18	55.03.0261	TTL-switch	1 ¤ open collector, Rafi nr. 3.13001.10	
	S....19	55.03.0261	TTL-switch	1 ¤ open collector, Rafi nr. 3.13001.10	
	S....20	55.03.0261	TTL-switch	1 ¤ open collector, Rafi nr. 3.13001.10	
	S....21	55.03.0261	TTL-switch	1 ¤ open collector, Rafi nr. 3.13001.10	

IND.	POS.NO.	PART NO.	VALUE	SPECIFICATIONS / EQUIVALENT	MANUF.
	S....22	55.03.0261	TTL-switch	1 ¤ open collector, Rafi nr. 3.13001.10	
	S....23	55.03.0261	TTL-switch	1 ¤ open collector, Rafi nr. 3.13001.10	
	S....24	55.03.0261	TTL-switch	1 ¤ open collector, Rafi nr. 3.13001.10	
	S....25	55.03.0261	TTL-switch	1 ¤ open collector, Rafi nr. 3.13001.10	
	S....26	55.03.0261	TTL-switch	1 ¤ open collector, Rafi nr. 3.13001.10	
	S....27	55.03.0261	TTL-switch	1 ¤ open collector, Rafi nr. 3.13001.10	
	S....28	55.03.0261	TTL-switch	1 ¤ open collector, Rafi nr. 3.13001.10	
	S....29	55.03.0261	TTL-switch	1 ¤ open collector, Rafi nr. 3.13001.10	
	S....30	55.03.0261	TTL-switch	1 ¤ open collector, Rafi nr. 3.13001.10	
	S....31	55.03.0261	TTL-switch	1 ¤ open collector, Rafi nr. 3.13001.10	
	S....32	55.03.0261	TTL-switch	1 ¤ open collector, Rafi nr. 3.13001.10	
	S....33			see note 3	
	SMP...1	55.03.0371		Colourfield, yellow, without LED opening	
	SMP...2	55.03.0381		Colourfield, yellow, with LED opening	
	SMP...3	55.03.0381		Colourfield, yellow, with LED opening	
	SMP...4	55.03.0381		Colourfield, yellow, with LED opening	
	SMP...5	55.03.0383		Colourfield, red, with LED opening	
	SMP...6	55.03.0385		Colourfield, grey, with LED opening	
	SMP...7	55.03.0385		Colourfield, grey, with LED opening	
	SMP...8	55.03.0374		Colourfield, white, without LED opening	
	SMP...9	55.03.0384		Colourfield, white, with LED opening	
	SMP..10	55.03.0380		Colourfield, blue, with LED opening	
	SMP..11	55.03.0380		Colourfield, blue, with LED opening	
	SMP..12	55.03.0374		Colourfield, white, without LED opening	
	SMP..13	55.03.0384		Colourfield, white, with LED opening	
	SMP..14	55.03.0380		Colourfield, blue, with LED opening	
	SMP..15	55.03.0380		Colourfield, blue, with LED opening	
	SMP..16	55.03.0374		Colourfield, white, without LED opening	
	SMP..17	55.03.0384		Colourfield, white, with LED opening	
	SMP..18	55.03.0380		Colourfield, blue, with LED opening	
	SMP..19	55.03.0380		Colourfield, blue, with LED opening	
	SMP..20	55.03.0374		Colourfield, white, without LED opening	
	SMP..21	55.03.0372		Colourfield, green, without LED opening	
	SMP..22	55.03.0382		Colourfield, green, with LED opening	
	SMP..23	55.03.0382		Colourfield, green, with LED opening	
	SMP..24	55.03.0372		Colourfield, green, without LED opening	

NO.	POS.NO.	PART NO.	VALUE	SPECIFICATIONS / EQUIVALENT	MANUF.
	C.....1	59.25.1471	470 uF	10%, 6V	
	C.....2	59.06.0683	68 nF	10%	
	C.....3	59.06.0683	68 nF	10%	
	C.....4	59.26.1100	10 uF	20%, 10V	
	C.....5	59.06.0683	68 nF	10%	
	D.....1	50.04.0512	1N 5818	1N 5819	Mot
	DL....1		not used		
	DL....2	50.04.2152	HLMP-1440		HP
	DL....3	50.04.2152	HLMP-1440		HP
	DL....4	50.04.2152	HLMP-1440		HP
	DL....5	50.04.2152	HLMP-1440		HP
	DL....6	50.04.2152	HLMP-1440		HP
	DL....7	50.04.2152	HLMP-1440		HP
	DL....8		not used		
	DL....9	50.04.2152	HLMP-1440		HP
	DL...10	50.04.2152	HLMP-1440		HP
	DL...11	50.04.2152	HLMP-1440		HP
	DL...12		not used		
	DL...13	50.04.2152	HLMP-1440		HP
	DL...14	50.04.2152	HLMP-1440		HP
	DL...15	50.04.2152	HLMP-1440		HP
	DL...16		not used		
	DL...17	50.04.2152	HLMP-1440		HP
	DL...18	50.04.2152	HLMP-1440		HP
	DL...19	50.04.2152	HLMP-1440		HP
	DL...20		not used		
	DL...21		not used		
	DL...22	50.04.2152	HLMP-1440		HP
	DL...23	50.04.2152	HLMP-1440		HP
	DL...24		not used		
	DL...25		not used		
	DL...26	50.04.2152	HLMP-1440		HP
	DL...27	50.04.2152	HLMP-1440		HP
	DL...28		not used		
	DL...29	50.04.2152	HLMP-1440		HP

IND.	POS.NO.	PART NO.	VALUE	SPECIFICATIONS / EQUIVALENT	MANUF.
	SMP..25	55.03.0372		Colourfield, green, without LED opening	
	SMP..26	55.03.0382		Colourfield, green, with LED opening	
	SMP..27	55.03.0382		Colourfield, green, with LED opening	
	SMP..28	55.03.0372		Colourfield, green, without LED opening	
	SMP..29	55.03.0382		Colourfield, green, with LED opening	
	SMP..30	55.03.0382		Colourfield, green, with LED opening	
	SMP..31	55.03.0382		Colourfield, green, with LED opening	
	SMP..32	55.03.0382		Colourfield, green, with LED opening	

Note 1 - Connector, 26 contacts:

Yamaichi nr.	FAP-26-08-4055
Burndy nr.	BPH 9 D26 B00 G5
3M nr.	7626-6002 VZ

Note 2 - Network 8 ¤ 3.3 kOhm, 5%, single line:

Allen Bradley nr.	909 A 332
Beckmann nr.	L - 09 - 1 - R 3.3 K
Bourns nr.	4609 M - 101 - 332
Dale nr.	CSC 09 A 01 - 332 G
Sprague nr.	256 C J 332 X2 PD
Tama nr.	M&G C 09 X 3.3 kOhm G
Vitrom nr.	FPE 3.3 kOhm 2%

Note 3 - Switch set:

Contact bow	Studer nr.	1.820.707.01
Insulator sleeve	Studer nr.	1.820.767.02
Rivet nut	Studer nr.	1.010.013.22
Screw	Studer nr.	21.53.0355

MANUFACTURER: HP=Hewlet Packard, Is=Intersil, Ma=Maxim, Mot=Motorola, NS=National Semiconductors, Ph=Philips, RCA=RCA Corporation of America, SGS=SGS/Ates, TI=Texas Instruments, To=Toshiba.

ORIG 86/10/03

9. Spare Parts/Diagrams Accessories

PARALLEL TAPE DECK REMOTE CONTROL CABINET 20.820.366.00
Tape transport remote control table cabinet
with 15m connection cable ..... 1.328.250.00 ..... 9/1
- Tape deck remote control board ..... 1.328.251.00 ..... 9/3

PARALLEL TAPE DECK REMOTE CONTROL MODULE 20.820.367.00
Tape transport remote control module ..... 1.328.255.00 ..... 9/5
including 15m connection cable 1.328.295.00
- Pushbutton board ..... 1.328.256.00 ..... 9/7
- Connector board ..... 1.328.257.00 ..... 9/9

VARI-SPEED CONTROLLER UNIT 21.328.253.00
For installation into table cabinet (without cable) ..... 1.328.253.00 ..... 9/11
VARI-SPEED CONTROLLER UNIT 21.328.290.00
For installation into remote stand ..... 1.328.290.00 ..... 9/11
- Vari-speed control board ..... 1.810.762.82 ..... 9/13

VARI-SPEED CONTROL MODULE (DE LUXE)
Vari-speed remote control (without cable) ..... 1.328.280.00 ..... 9/15
- Vari-speed display and keyboard ..... 1.328.281.00 ..... 9/17
- Vari-speed main board ..... 1.328.282.20 ..... 9/19
- Vari-speed connectors board ..... 1.328.283.00 ..... 9/22

REMOTE COUNTER (RS 232) 21.328.275.00
including 15m connection cable 1.328.297.00
Remote counter ..... 1.328.275.00 ..... 9/23
- CPU board ..... 1.328.276.20 ..... 9/25
- Display board ..... 1.328.277.00 ..... 9/27

SERIAL REMOTE COUNTER 20.820.368.00
Including 15m connection cable 1.328.293.81
Serial remote counter ..... 1.328.270.00 ..... 9/29
- Stabilizer board ..... 1.328.213.00 ..... 9/31
- Timer display board ..... 1.328.271.00 ..... 9/33
- Timer driver board ..... 1.328.272.24 ..... 9/35

SERIAL REMOTE CONTROL CABINET 20.820.369.00
SERIAL REMOTE CONTROL MODULE 20.820.370.00
including 15m connection cable 1.328.293.81
Serial remote control cabinet ..... 1.328.210.00 ..... 9/37
Serial remote control module ..... 1.328.220.00 ..... 9/37
- Stabilizer board ..... 1.328.213.00 ..... 9/39
- Remote control driver board ..... 1.328.211.23 ..... 9/41
- Remote control display board ..... 1.328.212.00 ..... 9/43
- Shuttle board ..... 1.328.214.00 ..... 9/45

SERIAL REMOTE SELECTOR 21.328.248.00
including 1m connection cable..... 1.328.296.00
Serial remote selector ..... 1.328.248.00 ..... 9/47
- Remote selector keyboard ..... 1.328.245.00 ..... 9/49
- Remote selector connectors board ..... 1.328.246.00 ..... 9/51

AUTOLOCATOR MODULE..... 21.328.230.00
AUTOLOCATOR CABINET 21.328.240.00
including 15m connection cable 1.328.293.81
Autolocator module..... 1.328.230.00 ..... 9/53
Autolocator cabinet..... 1.328.240.00 ..... 9/53
- Stabilizer board..... 1.328.213.00 ..... 9/55
- Pushbutton/display board ..... 1.328.231.00 ..... 9/57
- Driver board ..... 1.328.232.22 ..... 9/59
- Pushbutton board..... 1.328.233.00 ..... 9/61
- Pushbutton board..... 1.328.233.81 ..... 9/63

AUDIO REMOTE CONTROL 8CH..... 21.328.501.00
AUDIO REMOTE CONTROL 24CH 21.328.503.00
including 15m connection cable 1.328.294.00
Audio remote control module 8CH..... 1.328.501.00 ..... 9/65
Audio remote control module 24CH..... 1.328.503.00 ..... 9/65
- DC converter..... 1.820.706.00 ..... 9/67
- Basis board VU-panel ..... 1.820.705.00 ..... 9/69
- MP unit VU-panel ..... 1.820.783.24 ..... 9/71
- Keyboard 24CH ..... 1.328.504.81 ..... 9/73
- Keyboard 8CH ..... 1.328.510.81 ..... 9/75
- Keyboard 24CH ..... 1.328.504.81 ..... 9/77
- Keyboard driver ..... 1.328.505.00 ..... 9/79

TAPE DECK REMOTE CONTROL CABINET (PARALLEL) 1.328.250.00

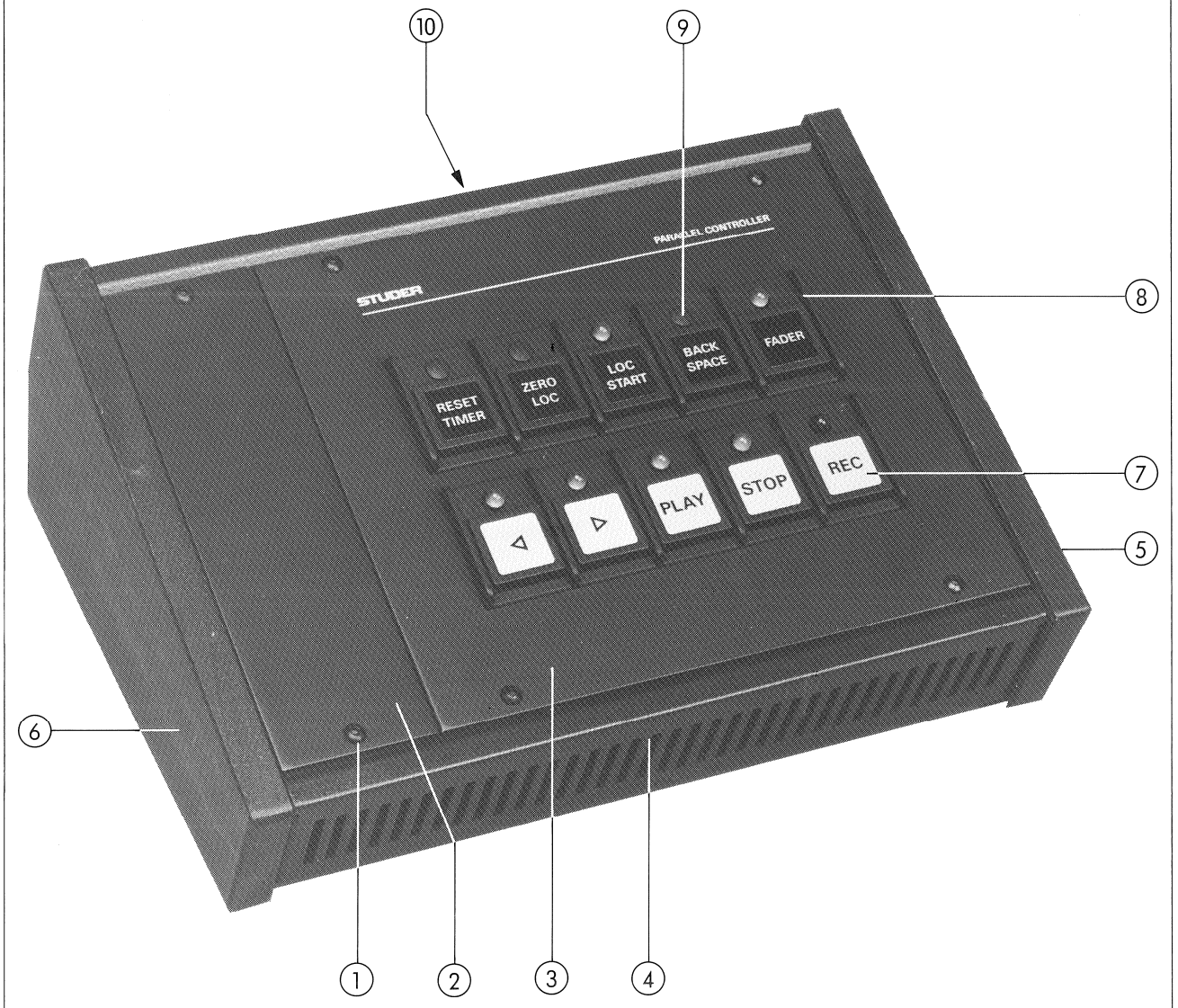

TAPE DECK REMOTE CONTROL CABINET (PARALLEL) 1.328.250.00

Pos.	QTY.	Order Number	Part Name	Specification
	1	1.328.250.00	Tape deck remote control cabinet (parallel)	
	10		(Self-adhesive labels: see section 10.)	
	1	1.328.251.00	TAPE DECK REMOTE CONTROL PCB	
	4 4 4 4	1.328.250.08 1.010.025.21 24.16.1030 23.01.1032	Hex stud bolt Chees head allen screw Fin washer Washer	 M3 x 6
1	6	1.010.025.21	Oval head allen screw	M3 x 6
2	1	1.328.250.05	Dummy plate	
3	1	1.328.250.03	Front cover	
4	1 4	1.820.921.00 31.02.0211	Housing compl. (with pos. 5, 6, 10 and feet) Foot	
5	1 4 4	1.328.250.02 21.53.0454 24.16.1040	Side panel Chees head allen screw Fin washer	right M4 x 6
6	1 4 4	1.328.250.01 21.53.0454 24.16.1040	Side panel Chees head allen screw Fin washer	left M4 x 6
7	10 10	1.011.210.01 1.010.202.37	Push button Pressure spring	
8	2 2	1.810.300.03 1.810.300.06	Push button housing Damping strip	
9	3	1.810.300.21	Plastic cover	
10	1 1 1	35.03.0120 21.51.8454 24.16.1040	Cable mounting support Oval head allen screw Fin washer	 M4 x 6

TAPE DECK REMOTE CONTROL CABINET (PARALLEL) 1.328.250.00
–TAPE DECK REMOTE CONTROL PCB 1.328.251.00

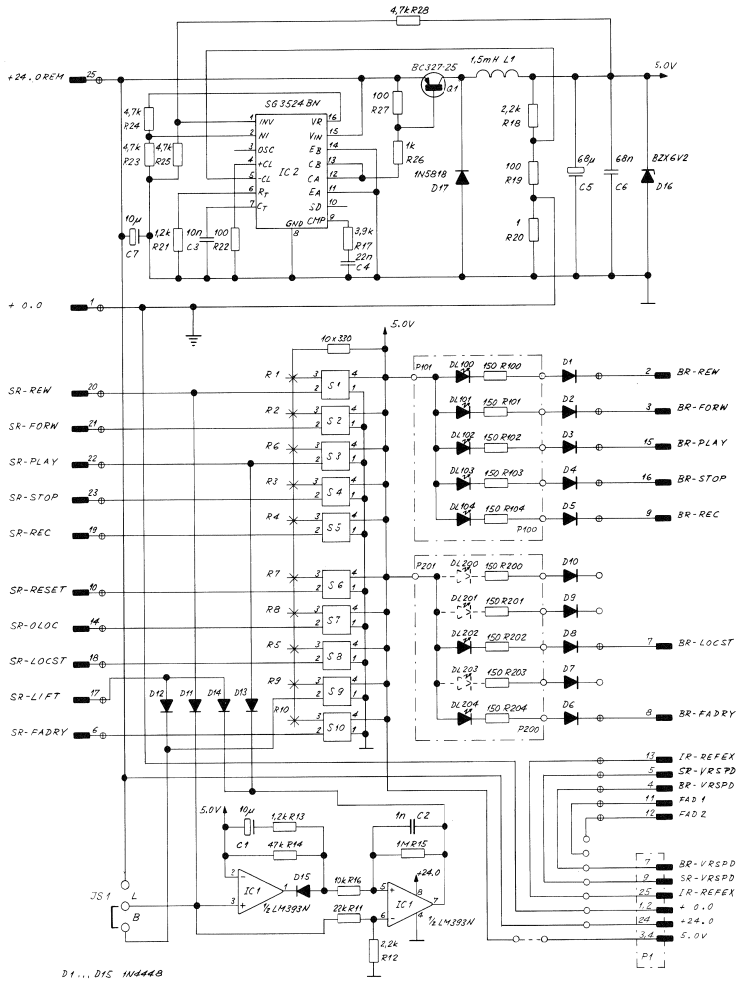

0 1.3.85	. .	. .	. .	. .
				PAGE 1 OF 1
STUDER	TAPE DECK REMOTE CONTROL		SC	1.328.251-00

TAPE DECK REMOTE CONTROL CABINET (PARALLEL) 1,328.250.00
–TAPE DECK REMOTE CONTROL PCB 1.328.251.00

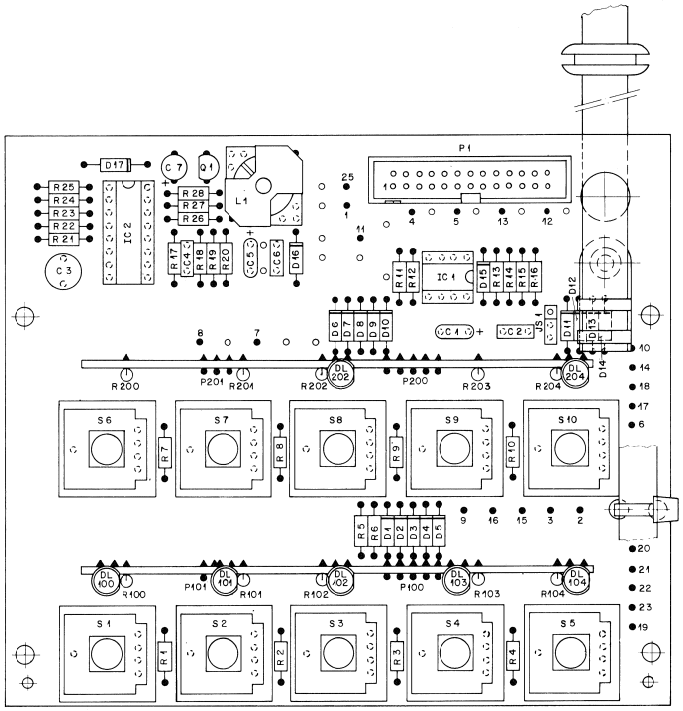

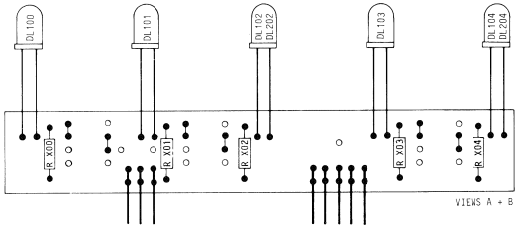

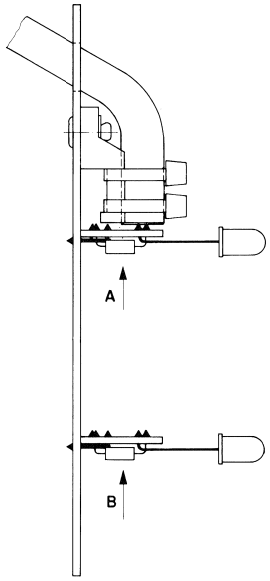

IND.	POS.NO.	PART NO.	VALUE	SPECIFICATIONS / EQUIVALENT	MANUF.
	IC....1	52.05.0283	LM393N		NS+Tho+TI
	IC....2	52.05.0279	SG3524BN		SG
	JS....1			See note 1	
	L.....1	1.022.197.00	1.5 mH		St
	P.....1	54.14.2003	26 cont.	See note 2	
	P...100	54.01.0269	5 cont.	AMP Nr. 163.740-3	
	P...101	54.01.0227	3 cont.	AMP Nr. 163.740-1	
	P...200	54.01.0269	5 cont.	AMP Nr. 163.740-3	
	P...201	54.01.0227	3 cont.	AMP Nr. 163.740-1	
	Q.....1	50.03.0351	BC327-25		ITT+Ph+Sie
	R.....1	57.11.4331	330 Ohm		
	R.....2	57.11.4331	330 Ohm		
	R.....3	57.11.4331	330 Ohm		
	R.....4	57.11.4331	330 Ohm		
	R.....5	57.11.4331	330 Ohm		
	R.....6	57.11.4331	330 Ohm		
	R.....7	57.11.4331	330 Ohm		
	R.....8	57.11.4331	330 Ohm		
	R.....9	57.11.4331	330 Ohm		
	R....10	57.11.4331	330 Ohm		
	R....11	57.11.4223	22 kOhm		
	R....12	57.11.4222	2.2 kOhm		
	R....13	57.11.4122	1.2 kOhm		
	R....14	57.11.4473	47 kOhm		
	R....15	57.11.4105	1 MOhm		
	R....16	57.11.4103	10 kOhm		
	R....17	57.11.4392	3.9 kOhm		
	R....18	57.11.4222	2.2 kOhm		
	R....19	57.11.4101	100 Ohm		
	R....20	57.11.4109	1 Ohm		
	R....21	57.11.4122	1.2 kOhm		
	R....22	57.11.4101	100 Ohm		

IND.	POS.NO.	PART NO.	VALUE	SPECIFICATIONS / EQUIVALENT	MANUF.
	R....23	57.11.4472	4.7 kOhm		
	R....24	57.11.4472	4.7 kOhm		
	R....25	57.11.4472	4.7 kOhm		
	R....26	57.11.4102	1 kOhm		
	R....27	57.11.4101	100 Ohm		
	R....28	57.11.4472	4.7 kOhm		
	R...100	57.11.4151	150 Ohm		
	R...101	57.11.4151	150 Ohm		
	R...102	57.11.4151	150 Ohm		
	R...103	57.11.4151	150 Ohm		
	R...104	57.11.4151	150 Ohm		
	R...200	57.11.4151	150 Ohm		
	R...201	57.11.4151	150 Ohm		
	R...202	57.11.4151	150 Ohm		
	R...203	57.11.4151	150 Ohm		
	R...204	57.11.4151	150 Ohm		
	S.....1			See note 3	
	S.....2			See note 3	
	S.....3			See note 3	
	S.....4			See note 3	
	S.....5			See note 3	
	S.....6			See note 3	
	S.....7			See note 3	
	S.....8			See note 3	
	S.....9			See note 3	
	S....10			See note 3	

IND.	POS.NO.	PART NO.	VALUE	SPECIFICATIONS / EQUIVALENT	MANUF.
	C.....1	59.26.2100	10 uF	20%, 16V, Sal	Ph
	C.....2	59.06.5102	1 nF	5%, PETP	
	C.....3	59.05.1103	10 nF	1%, Pp	
	C.....4	59.06.0223	22 nF	10%, PETP	
	C.....5	59.26.0680	68 uF	20%, 6.3V, Sal	Ph
	C.....6	59.06.0683	68 nF	20%, PETP	
	C.....7	59.22.6100	10 uF	-10%, 40V, El	
	D.....1	50.04.0125	1N4448		Fc+ITT+Ph+Ses+Tf
	D.....2	50.04.0125	1N4448		Fc+ITT+Ph+Ses+Tf
	D.....3	50.04.0125	1N4448		Fc+ITT+Ph+Ses+Tf
	D.....4	50.04.0125	1N4448		Fc+ITT+Ph+Ses+Tf
	D.....5	50.04.0125	1N4448		Fc+ITT+Ph+Ses+Tf
	D.....6	50.04.0125	1N4448		Fc+ITT+Ph+Ses+Tf
	D.....7	50.04.0125	1N4448		Fc+ITT+Ph+Ses+Tf
	D.....8	50.04.0125	1N4448		Fc+ITT+Ph+Ses+Tf
	D.....9	50.04.0125	1N4448		Fc+ITT+Ph+Ses+Tf
	D....10	50.04.0125	1N4448		Fc+ITT+Ph+Ses+Tf
	D....11	50.04.0125	1N4448		Fc+ITT+Ph+Ses+Tf
	D....12	50.04.0125	1N4448		Fc+ITT+Ph+Ses+Tf
	D....13	50.04.0125	1N4448		Fc+ITT+Ph+Ses+Tf
	D....14	50.04.0125	1N4448		Fc+ITT+Ph+Ses+Tf
	D....15	50.04.0125	1N4448		Fc+ITT+Ph+Ses+Tf
	D....16	50.04.1118	6x2 V Z	BZX83C 6.2, BZX55C 6.2, ZPD 6x2	ITT+Ses
	D....17	50.04.0512	1N5818	1N5819	Mot
	DL..100	50.04.2112	MW5353	CM4-5848, HLMP-3401	CM+GI+HP
	DL..101	50.04.2112	MW5353	CM4-5848, HLMP-3401	CM+GI+HP
	DL..102	50.04.2112	MW5353	CM4-5848, HLMP-3401	CM+GI+HP
	DL..103	50.04.2112	MW5353	CM4-5848, HLMP-3401	CM+GI+HP
	DL..104	50.04.2111	MW5753	CM4-2848, HLMP-3301	CM+GI+HP
	DL..200		not used		
	DL..201		not used		
	DL..202	50.04.2112	MW5353	CM4-5848, HLMP-3401	CM+GI+HP
	DL..203		not used		
	DL..204	50.04.2112	MW5353	CM4-5848, HLMP-3401	CM+GI+HP

Note 1 - Contact pir: Studer 54.01.0020, Berg 75 160-102-36
Bridge: Studer 54.01.0021, Philips 2422 024 88003

Note 2 - Connector: Yamaichi FAP-26-08//4, Burndy BPH 9 B 26 B00 GS

Note 3 - Switch: Studer 55.03.0261, Rafi 3.13001.110
Extender: Studer 55.03.0262, Rafi 5.55101.690

Ce=Ceramic, El=Electrolytic, Sal=Solid aluminium,
PETP=Polyesterfilm, Pp=Polypropylen.

MANUFACTURER: CM=Chicago Miniatur, Fc=Fairchild,
GI=General Instruments, HP=Hewlett Packard,
ITT=Intermetall, Mot=Motorola,
NS=National Semiconductors, Ph=Philips, Ses=Sescosem,
SG=Silicon General, Sie=Siemens, St=Studer, Tho=Thomson,
TI=Texas Instruments, Tf=Telefunken.

ORIG 85/03/01

TAPE DECK REMOTE CONTROL MODULE (PARALLEL) 1.328.255.00

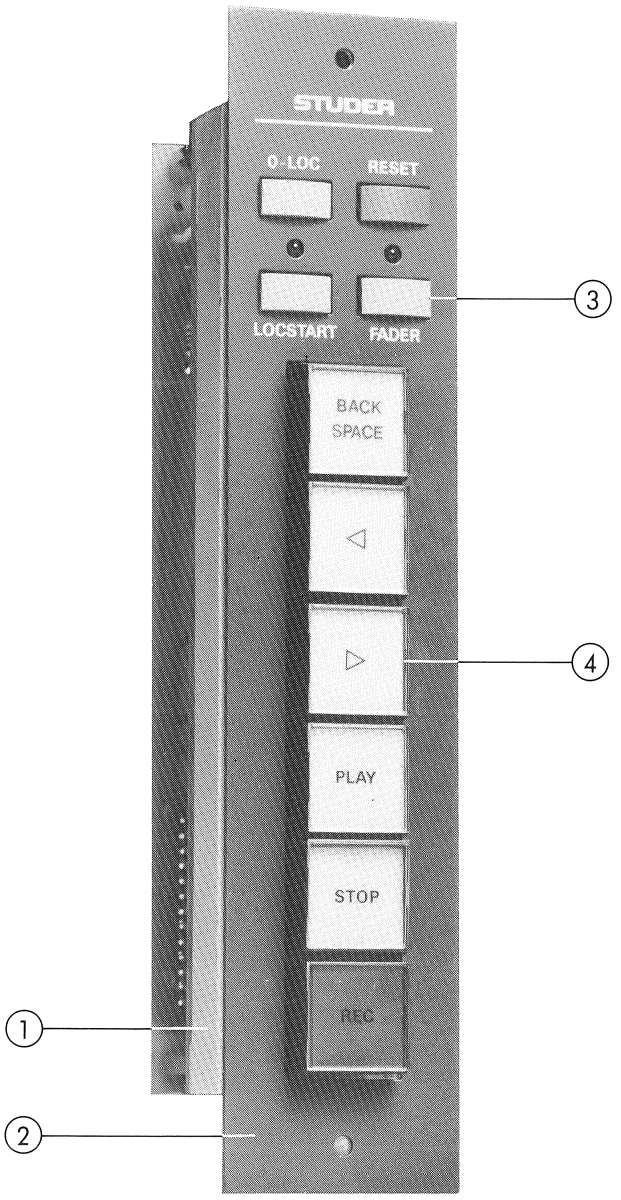

TAPE DECK REMOTE CONTROL MODULE (PARALLEL) 1.328.255.00

Pos.	QTY.	Order Number	Part Name	Specification
	1	1.328.255.00	Tape deck remote control module (parallel)	
	6		(labels: see section 10.)	
	1	1.328.256.00	PUSH BUTTON PCB	
	1	1.328.257.00	CONNECTOR PCB	
	4 4 4 4	1.010.110.27 21.53.0354 24.16.1030 23.01.1032	Hex stud bolt Chees head allen screw Fin washer Washer	 M3 x 6
1	1	1.328.255.01	Support	
2	1	1.328.255.02	Front cover	
3	1 3	55.15.0122 55.15.0128	Push button Push button	red grey
4	1 5 1 5 6	55.15.0201 55.15.0202 55.15.0212 55.15.0221 55.15.0228	Push button cover Push button cover Diffusing screen Diffusing screen Push button housing	concave flat red white

TAPE DECK REMOTE CONTROL MODULE (PARALLEL) 1.328.255.00
–PUSHBUTTON PCB 1.328.256.00

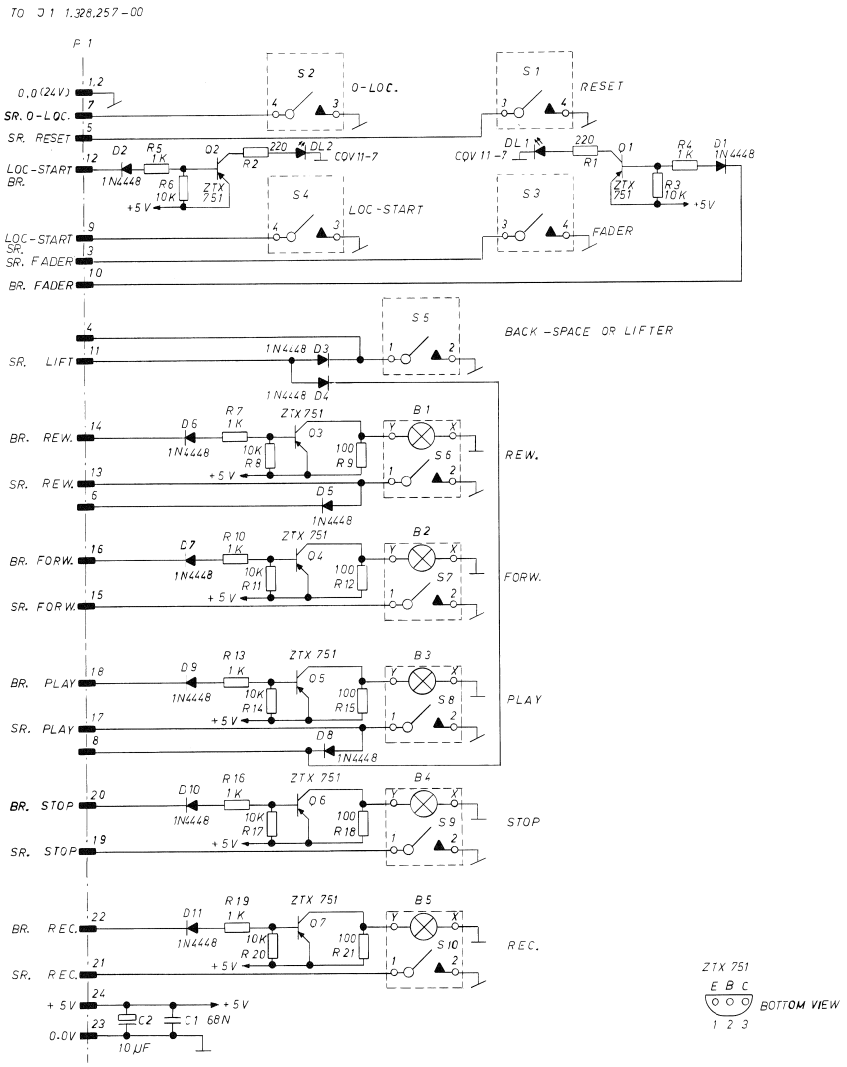

0 12.02.86 C. METZ				
	MODUL PARALLEL A727, A812, A820			PAGE 1 OF 1
STUDER	PUSHBUTTON BOARD		SC	1.328.256-00

TAPE DECK REMOTE CONTROL MODULE (PARALLEL) 1.328.255.00
–PUSHBUTTON PCB 1.328.256.00

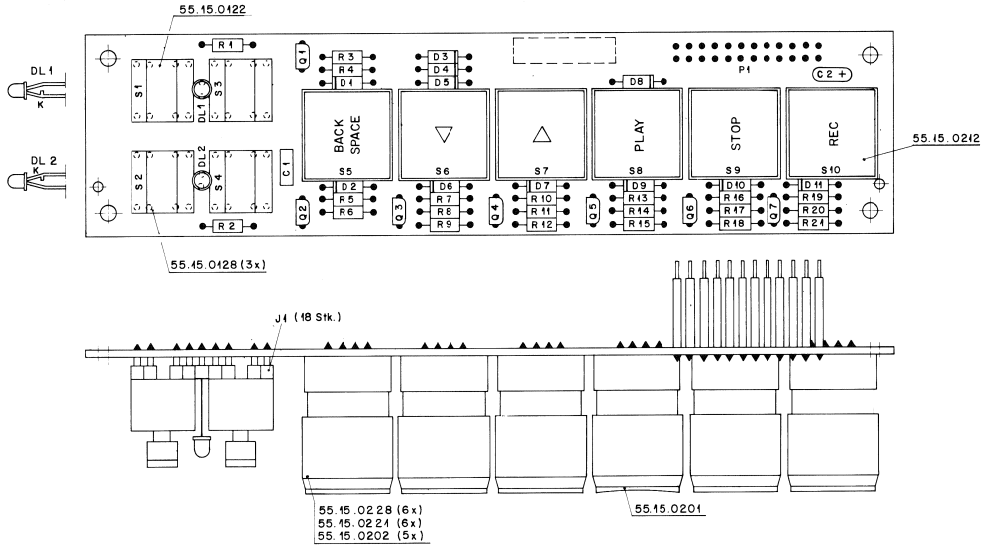

IND.	POS.NO.	PART NO.	VALUE	SPECIFICATIONS / EQUIVALENT	MANUF.
	B.....1	51.02.0155		5 V; 0.060 A	
	B.....2	51.02.0155		5 V; 0.060 A	
	B.....3	51.02.0155		5 V; 0.060 A	
	B.....4	51.02.0155		5 V; 0.060 A	
	B.....5	51.02.0155		5 V; 0.060 A	
	C.....1	59.06.0683	.068 u	10%, 63V, PETP	
	C.....2	59.26.2100	10 u	20%, 16V, SAL	
	D.....1	50.04.0125	1 N 4448	75 V; 0.1 A SI	
	D.....2	50.04.0125	1 N 4448	75 V; 0.1 A SI	
	D.....3	50.04.0125	1 N 4448	75 V; 0.1 A SI	
	D.....4	50.04.0125	1 N 4448	75 V; 0.1 A SI	
	D.....5	50.04.0125	1 N 4448	75 V; 0.1 A SI	
	D.....6	50.04.0125	1 N 4448	75 V; 0.1 A SI	
	D.....7	50.04.0125	1 N 4448	75 V; 0.1 A SI	
	D.....8	50.04.0125	1 N 4448	75 V; 0.1 A SI	
	D.....9	50.04.0125	1 N 4448	75 V; 0.1 A SI	
	D.....10	50.04.0125	1 N 4448	75 V; 0.1 A SI	
	D.....11	50.04.0125	1 N 4448	75 V; 0.1 A SI	
	DL.....1	50.04.2129	RED DIFF.	CQV 11-7	Sie.
	DL.....2	50.04.2129	RED DIFF.	CQV 11-7	Sie.
	P.....1	1.010.019.94	Z + 24 PIN	L = 20 MM	
	Q.....1	50.03.0352	ZTX 751 S	60 V; 2 A PNP SI	Fe.
	Q.....2	50.03.0352	ZTX 751 S	60 V; 2 A PNP SI	Fe.
	Q.....3	50.03.0352	ZTX 751 S	60 V; 2 A PNP SI	Fe.
	Q.....4	50.03.0352	ZTX 751 S	60 V; 2 A PNP SI	Fe.
	Q.....5	50.03.0352	ZTX 751 S	60 V; 2 A PNP SI	Fe.
	Q.....6	50.03.0352	ZTX 751 S	60 V; 2 A PNP SI	Fe.
	Q.....7	50.03.0352	ZTX 751 S	60 V; 2 A PNP SI	Fe.
	R.....1	57.11.4221	220	2%, 0207, MF	
	R.....2	57.11.4221	220	2%, 0207, MF	
	R.....3	57.11.4103	10 k	2%, 0207, MF	

IND.	POS.NO.	PART NO.	VALUE	SPECIFICATIONS / EQUIVALENT	MANUF.
	R.....4	57.11.4102	1.0 k	2%, 0207, MF	
	R.....5	57.11.4102	1.0 k	2%, 0207, MF	
	R.....6	57.11.4103	10 k	2%, 0207, MF	
	R.....7	57.11.4102	1.0 k	2%, 0207, MF	
	R.....8	57.11.4103	10 k	2%, 0207, MF	
	R.....9	57.11.4101	100	2%, 0207, MF	
	R.....10	57.11.4102	1.0 k	2%, 0207, MF	
	R.....11	57.11.4103	10 k	2%, 0207, MF	
	R.....12	57.11.4101	100	2%, 0207, MF	
	R.....13	57.11.4102	1.0 k	2%, 0207, MF	
	R.....14	57.11.4103	10 k	2%, 0207, MF	
	R.....15	57.11.4101	100	2%, 0207, MF	
	R.....16	57.11.4102	1.0 k	2%, 0207, MF	
	R.....17	57.11.4103	10 k	2%, 0207, MF	
	R.....18	57.11.4101	100	2%, 0207, MF	
	R.....19	57.11.4102	1.0 k	2%, 0207, MF	
	R.....20	57.11.4103	10 k	2%, 0207, MF	
	R.....21	57.11.4101	100	2%, 0207, MF	
	S.....1	55.15.0112	MK II	MOMENTARY PUSHBUTTON SWITCH	MEK.
	S.....2	55.15.0112	MK II	MOMENTARY PUSHBUTTON SWITCH	MEK.
	S.....3	55.15.0112	MK II	MOMENTARY PUSHBUTTON SWITCH	MEK.
	S.....4	55.15.0112	MK II	MOMENTARY PUSHBUTTON SWITCH	MEK.
	S.....5	55.15.0231		MOMENTARY PUSHBUTTON SWITCH	EAO
	S.....6	55.15.0231		MOMENTARY PUSHBUTTON SWITCH	EAO
	S.....7	55.15.0231		MOMENTARY PUSHBUTTON SWITCH	EAO
	S.....8	55.15.0231		MOMENTARY PUSHBUTTON SWITCH	EAO
	S.....9	55.15.0231		MOMENTARY PUSHBUTTON SWITCH	EAO
	S.....10	55.15.0231		MOMENTARY PUSHBUTTON SWITCH	EAO

IND.	POS.NO.	PART NO.	VALUE	SPECIFICATIONS / EQUIVALENT	MANUF.

CER=Ceramic, EL=Electrolytic, MP=Metallized Paper, MPC=Metallized Polycarbonate, MPETP=Metallized Polyester, PC=Polycarbonate, PETP=Polyester
PP=Polypropylene, PS=Polystyrol, SAL=Solid Aluminium, TA=Tantal
Cermet=Ceramic Metal, MF=Metal Film.

MANUFACTURERS :

EAO = Elektro Apparaten Olten
Fe = Ferranti
MEK = Mekanisk Elektrisk Compagni af 1975
Sie = Siemens

ORIG 86/02/13

TAPE DECK REMOTE CONTROL MODULE (PARALLEL) 1.328.255.00
–CONNECTOR PCB 1.328.257.00

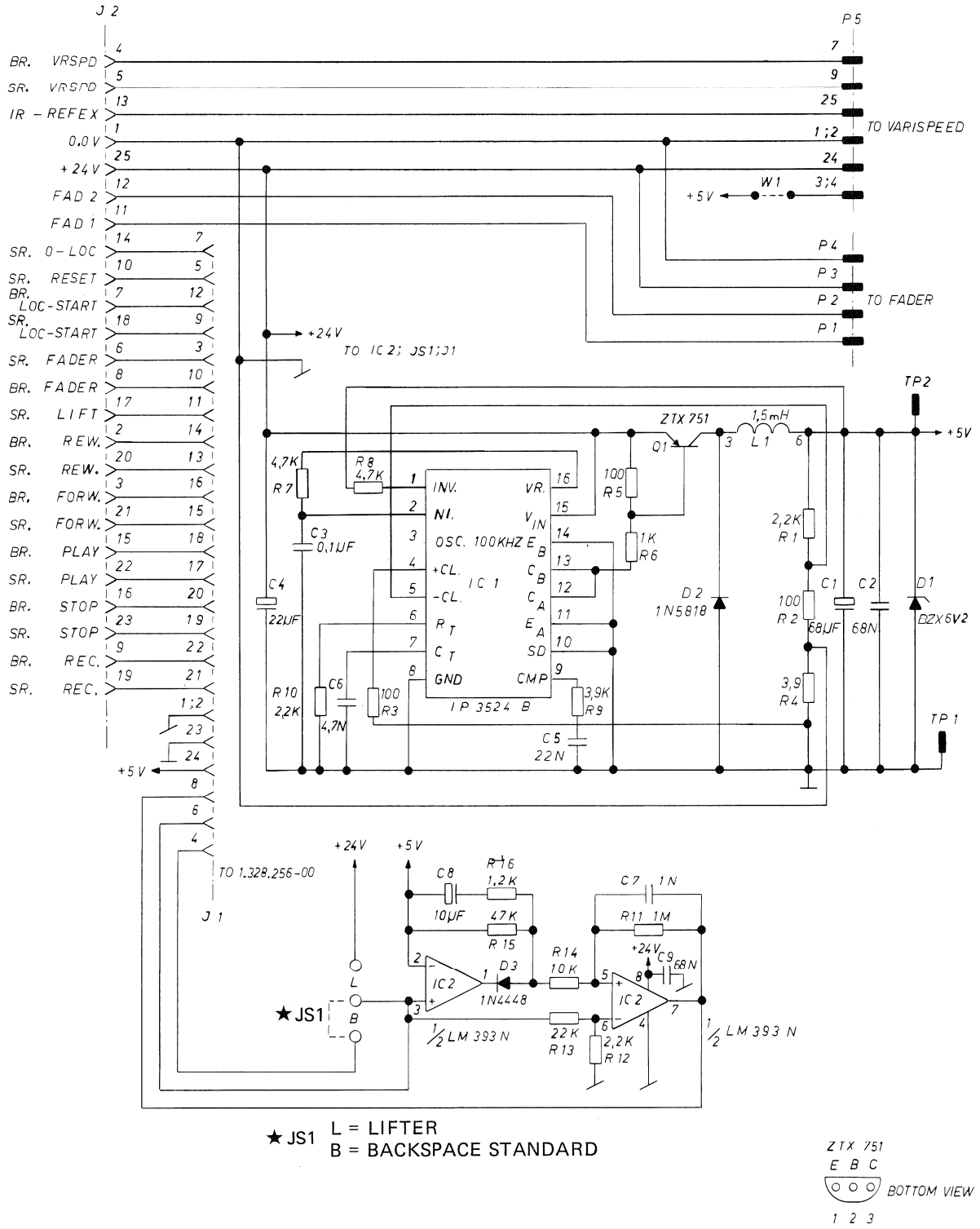

★JS1 L = LIFTER
B = BACKSPACE STANDARD

0 13.02.86 C. METZ				
	MODUL PARALLEL A727, A812, A820			PAGE 1 OF 1
STUDER	CONNECTORS BOARD		SC	1.328.257-00

TAPE DECK REMOTE CONTROL MODULE (PARALLEL) 1.328.255.00
–CONNECTOR PCB 1.328.257.00

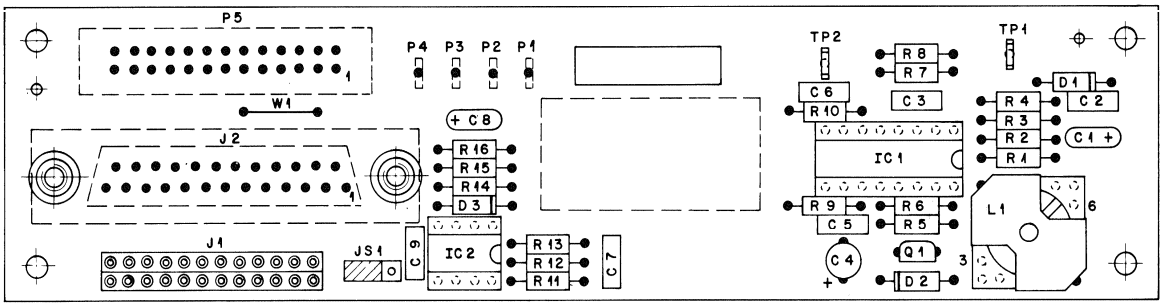

★JS1 L = LIFTER
B = BACKSPACE STANDARD

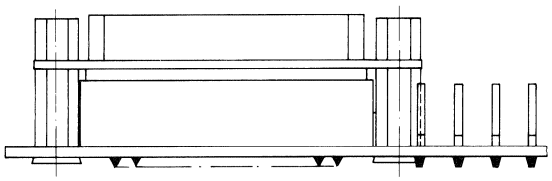

IND.	POS.NO.	PART NO.	VALUE	SPECIFICATIONS / EQUIVALENT	MANUF.
C	1	59.26.0680	68 u	20%, 6.3V, SAL	
C	2	59.06.0683	.068 u	10%, 63V, PETP	
C	3	59.06.0104	.1 u	10%, 63V, PETP	
C	4	59.22.6220	22 u	-20%, 35V, EL	
C	5	59.06.0223	.022 u	10%, 63V, PETP	
C	6	59.06.0472	4700 p	10%, 63V, PETP	
C	7	59.06.0102	1000 p	10%, 63V, PETP	
C	8	59.26.2100	10 u	20%, 16V, SAL	
C	9	59.06.0683	.068 u	10%, 63V, PETP	
D	1	50.04.1118	BZX 6V2	5%, 6.2 V, 0.40 W, Z,	
D	2	50.04.0512	1 N 5818	SCHOTTKY	Mot.
D	3	50.04.0125	1 N 4448	75 V; 100 mA; SI	
IC	1	50.05.0279	IP 3524 B	REGULATING PULSE WIDTH MODULATOR	IPS.
IC	2	50.05.0283	LM 393 N	DUAL LOW POWER COMPARATOR	TI.
J	1	53.03.0212	2 * 12 PIN		
J	2	54.13.0023		D-TYPE, 25 PIN PRINT FEMALE CONNECTOR	
JS	1	54.01.0021	2 * 0.63	JUMPER	
L	1	1.022.197.00	1.5 mH	CHOKE	St.
P	1	54.02.0320	2.8 * 0.8	SOLDERING PIN	
P	2	54.02.0320	2.8 * 0.8	SOLDERING PIN	
P	3	54.02.0320	2.8 * 0.8	SOLDERING PIN	
P	4	54.02.0320	2.8 * 0.8	SOLDERING PIN	
P	5	54.14.2003		26 PIN PRINT MALE CONNECTOR	
Q	1	50.03.0352	ZTX 751 S	60 V, 2 A, PNP SI	Fe.
R	1	57.11.4222	2.2 k	2%, 0207, MF	
R	2	57.11.4101	100	2%, 0207, MF	
R	3	57.11.4101	100	2%, 0207, MF	
R	4	57.11.4399	3.9	2%, 0207, MF	
R	5	57.11.4101	100	2%, 0207, MF	

IND.	POS.NO.	PART NO.	VALUE	SPECIFICATIONS / EQUIVALENT	MANUF.
R	6	57.11.4102	1.0 k	2%, 0207, MF	
R	7	57.11.4472	4.7 k	2%, 0207, MF	
R	8	57.11.4472	4.7 k	2%, 0207, MF	
R	9	57.11.4392	3.9 k	2%, 0207, MF	
R	10	57.11.4222	2.2 k	2%, 0207, MF	
R	11	57.11.4105	1 M	2%, 0207, MF	
R	12	57.11.4222	2.2 k	2%, 0207, MF	
R	13	57.11.4223	22 k	2%, 0207, MF	
R	14	57.11.4103	10 k	2%, 0207, MF	
R	15	57.11.4473	47 k	2%, 0207, MF	
R	16	57.11.4122	1.2 k	2%, 0207, MF	
TP	1	54.02.0320	2.8 * 0.8	SOLDERING PIN	
TP	2	54.02.0320	2.8 * 0.8	SOLDERING PIN	

CER=Ceramic, EL=Electrolytic, MP=Metallized Paper, MPC=Metallized Polycarbonate, MPETP=Metallized Polyester, PC=Polycarbonate, PETP=Polyester
PP=Polypropylene, PS=Polystyrol, SAL=Solid Aluminium, TA=Tantal
Cermet=Ceramic Metal, MF=Metal Film.

MANUFACTURERS :
Fe = Ferranti
IPS = Integrated Power Semiconductors Limited
Mot = Motorola
St = Studer
TI = Texas Instruments

ORIG 86/02/14

VARISPEED FOR REMOTE CONTROL ONLY 1.328.253.00
VARISPEED CONTROL MODULE 1.328.290.00

1.328.253.00

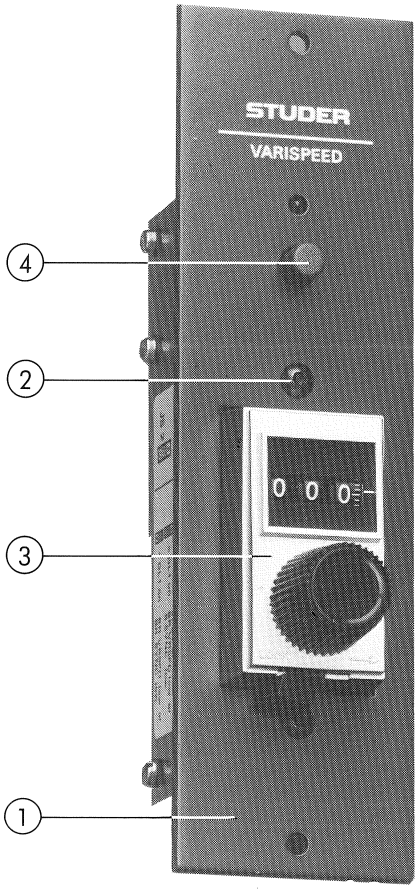

1.328.290.00

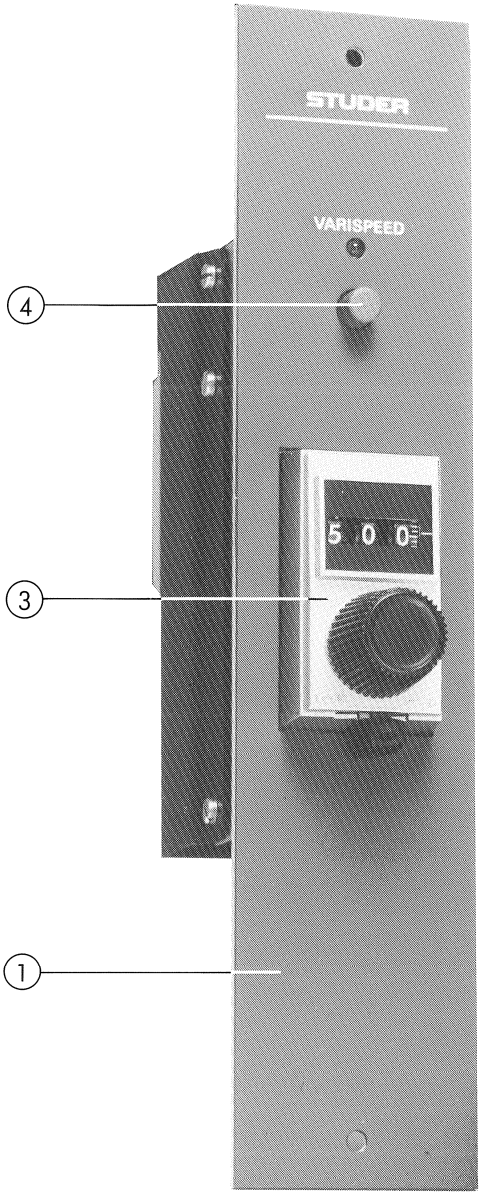

VARISPEED FOR REMOTE CONTROL ONLY 1.328.253.00
VARISPEED CONTROL MODULE 1.328.290.00

Pos.	QTY.	Order Number	Part Name	Specification
	1	1.328.253.00	Varispeed conversion kit (for parallel remote control only)	
	1	1.328.290.00	Varispeed control module	
	1	1.810.762.82	VARISPEED CONTROL PCB	
	3 3 1	21.01.0279 24.16.1025 1.328.290.04	Pan-head screw, slotted Fin washer Insulation	M2.5 x 6
1	1 1 1 1	1.328.250.10 1.810.330.02 1.328.290.01 1.328.290.02	Front cover (short) Spacer Support Front plate	
1	1	1.328.290.02	Front cover (long)	
2	2	1.010.025.21	Oval head allen screw	M3 x 6
3	1	58.99.0116	Varispeed set unit	
4	1	1.810.320.07	Push button, long	red

VARISPEED FOR REMOTE CONTROL ONLY 1.328.253.00
VARISPEED CONTROL MODULE 1.328.290.00
–VARISPEED CONTROL PCB 1.810.762.82

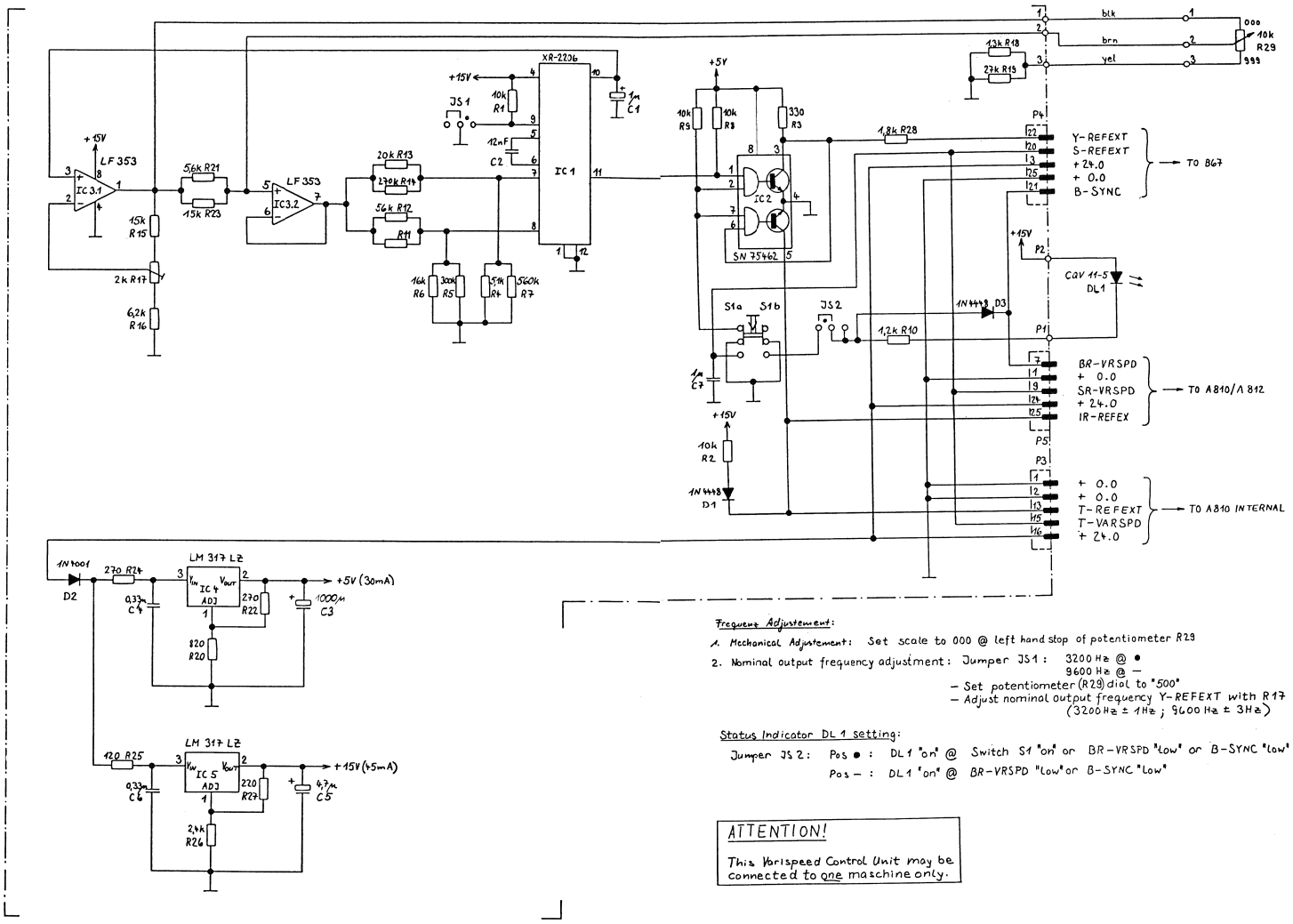

Frequenz Adjustement:

1. Mechanical Adjustement: Set scale to 000 @ left hand stop of potentiometer R29
2. Nominal output frequency adjustment: Jumper JS1: 3200 Hz @ ●
   9600 Hz @ –
   – Set potentiometer (R29) dial to "500"
   – Adjust nominal output frequency Y-REFEXT with R17
   (3200 Hz ± 1Hz ; 9600 Hz ± 3Hz)

Status Indicator DL 1 setting:

Jumper JS 2: Pos ● : DL 1 "on" @ Switch S1 "on" or BR-VRSPD "Low" or B-SYNC "Low"
Pos – : DL 1 "on" @ BR-VRSPD "Low" or B-SYNC "Low"

ATTENTION!

This Varispeed Control Unit may be connected to one maschine only.

0 07.02.84 LN					PAGE 1 OF 1
STUDER	Varispeed Control Board			SC	1.810.762.82

VARISPEED FOR REMOTE CONTROL ONLY 1.328.253.00
VARISPEED CONTROL MODULE 1.328.290.00
–VARISPEED CONTROL PCB 1.810.762.82

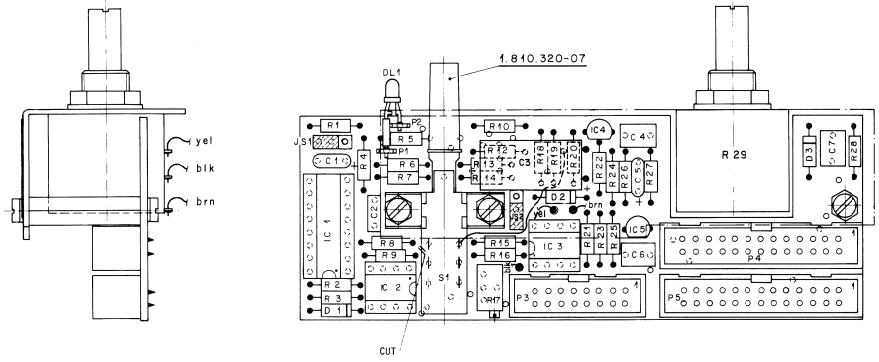

IND.	POS.NO.	PART NO.	VALUE	SPECIFICATIONS / EQUIVALENT	MANUF.
	C..0001	59.26.9109	1 uF	20%, 40V, Sal	Ph
	C..0002	59.99.9220	12 nF	5%, 50V, Cer see note 1	
	C..0003	59.99.1700	1000 uF	6.3V L < 21mm D < 10mm	
	C..0004	59.06.0334	0.33uF	10%, 63V, Petp	
	C..0005	59.26.5479	4.7 uF	20%, 25V, Sal	Ph
	C..0006	59.06.0334	0.33uF	10%, 63V, Petp	
	C..0007	59.06.9105	1uF	10%, 50V, Petp	
	D..0001	50.04.0125	1N 4448		Ph,Ses,ITT,Fc,Tf
	D..0002	50.04.0122	1N 4001		Mot,GI,Sol
	D..0003	50.04.0125	1N 4448		Ph,Ses,ITT,Fc,Tf
	DL.0001	50.04.2129	CQV11-7		Sie
	IC.0001	50.11.0108	XR2206CP	SG 2206	Ex
	IC.0002	50.05.0227	SN75462P		TI
	IC.0003	50.09.0101	LF 353N	TL 072CP	TI,NS,Mot
	IC.0004	50.10.0108	LM317LZ		Nat,Mot
	IC.0005	50.10.0109	LM317LZ		Nat,Mot
	JS.0001	54.01.0020	Pin (39)	54.01.0021 Bridge (19) see note 2	
	JS.0002	54.01.0020	Pin (39)	54.01.0021 Bridge (19) see note 2	
	P..0001	54.02.0320		2.890.8	
	P..0002	54.02.0320		2.890.8	
	P..0003	54.14.2007		14-contacts see note 3	
	P..0004	54.14.2003		26-contacts see note 4	
	P..0005	54.14.2003		26-contacts see note 4	
	R..0001	57.11.4103	10 kOhm	5%	
	R..0002	57.11.4103	10 kOhm	5%	
	R..0003	57.11.4331	330 Ohm	5%	
	R..0004	57.11.3512	5.1 kOhm	1%	
	R..0005	57.11.3304	300 kOhm	5%	
	R..0006	57.11.3163	16 kOhm	1%	
	R..0007	57.11.4564	560 kOhm	5%	
	R..0008	57.11.4103	10 kOhm	5%	

IND.	POS.NO.	PART NO.	VALUE	SPECIFICATIONS / EQUIVALENT	MANUF.
	R..0009	57.11.4103	10 kOhm	5%	
	R..0010	57.11.4122	1.2 kOhm	5%	
	R..0011		not used		
	R..0012	57.11.3563	56 kOhm	1%	
	R..0013	57.11.3203	20 kOhm	1%	
	R..0014	57.11.4274	270 kOhm	5%	
	R..0015	57.11.3153	15 kOhm	1%	
	R..0016	57.11.3622	6.2 kOhm	1%	
	R..0017	58.05.0202	2 kOhm	25 turns	
	R..0018	57.11.3132	1.3 kOhm	1%	
	R..0019	57.11.4273	27 kOhm	5%	
	R..0020	57.11.3821	820 Ohm	1%	
	R..0021	57.11.3562	5.6 kOhm	1%	
	R..0022	57.11.3271	270 Ohm	1%	
	R..0023	57.11.3153	15 kOhm	1%	
	R..0024	57.11.3271	270 Ohm	1%	
	R..0025	57.11.4121	120 Ohm	5%	
	R..0026	57.11.3242	2.4 kOhm	1%	
	R..0027	57.11.3221	220 Ohm	1%	
	R..0028	57.11.4182	1.8 kOhm	5%	
	R..0029	58.99.0123	10 kOhm	10 turns	
	S..0001	1.177.100.07		Switch	St

IND.	POS.NO.	PART NO.	VALUE	SPECIFICATIONS / EQUIVALENT	MANUF.

Note 1: 12nF,50V: Centralab Nr. CN 40 C 123 J
Siemens Nr. B 37 983 - J - 5123 - J
Kemet Nr. C 062 S 123 J 5 G 5 CA

Note 2: Contact pin: Berg Nr. 75160-102-36
Philips Nr. 2422 025 89303
bridge: Berg Nr. 65474-001
AMP Nr. 141767-1
Philips Nr. 2422 024 88003

Note 3: 16-contacts: Yamaichi Nr. FAP-16-08//4
Burndy Nr. BPH 9 B 16 800 GS

Note 4: 26-contacts: Yamaichi Nr. FAP-26-08//4
Burndy Nr. BPH 9 B 26 800 GS

Manufacturer: Ex=Exar, Fc=Fairchild, GI=General Instruments,
ITT=Intermetall, Mot=Motorola, Nat=National(Matsushita)
NS=National Semiconductors, Ph=Philips,
Ses+Sescosem, Sie=Siemens, Sol=Solitron,
St=Studer, Tf=Telefunken, TI=Texas Instrument

ORIG 85/07/09

VARISPEED CONTROLLER 1.328.280.00

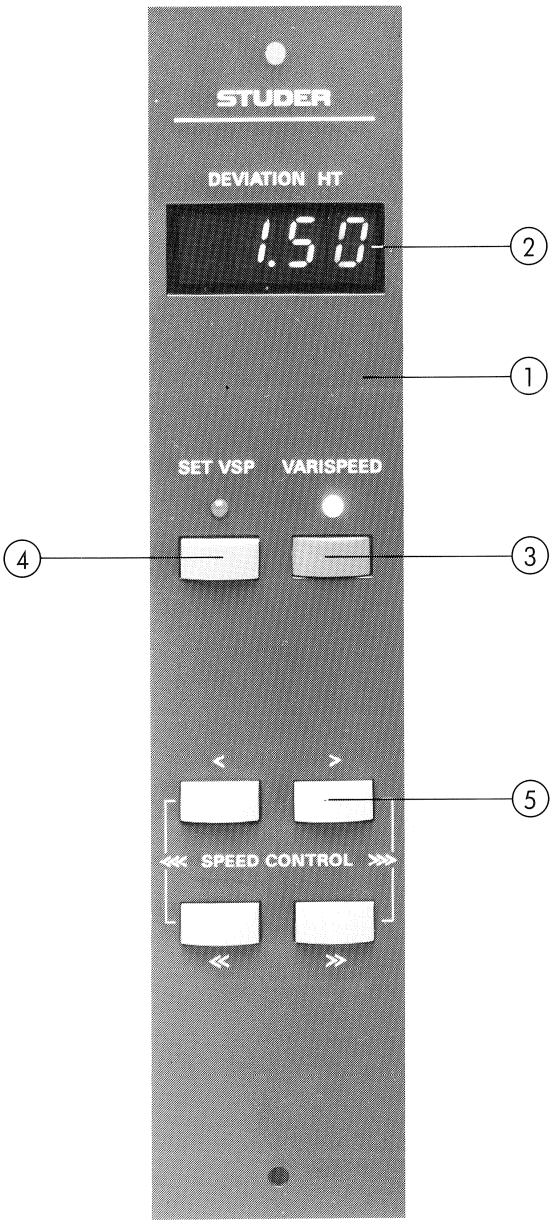

VARISPEED CONTROLLER 1.328.280.00

Pos.	QTY.	Order Number	Part Name	Specification
	1	1.328.280.00	Varispeed Controller	
	1	1.328.281.00	Varispeed Display-and Keyboard	
	1	1.328.282.20	Varispeed Main Board	
	1	1.328.283.00	Varispeed Connector Board	
1	1	1.328.280.01	Front cover	
2	1	1.328.280.03	Glas pane	
3	1	55.15.0122	Push button	red
4	1	55.15.0123	Push button	orange
5	1	55.15.0128	Push button	grey

VARISPEED CONTROLER 1.328.280.00
–VARISPEED DISPLAY AND KEYBOARD 1.328.281.00

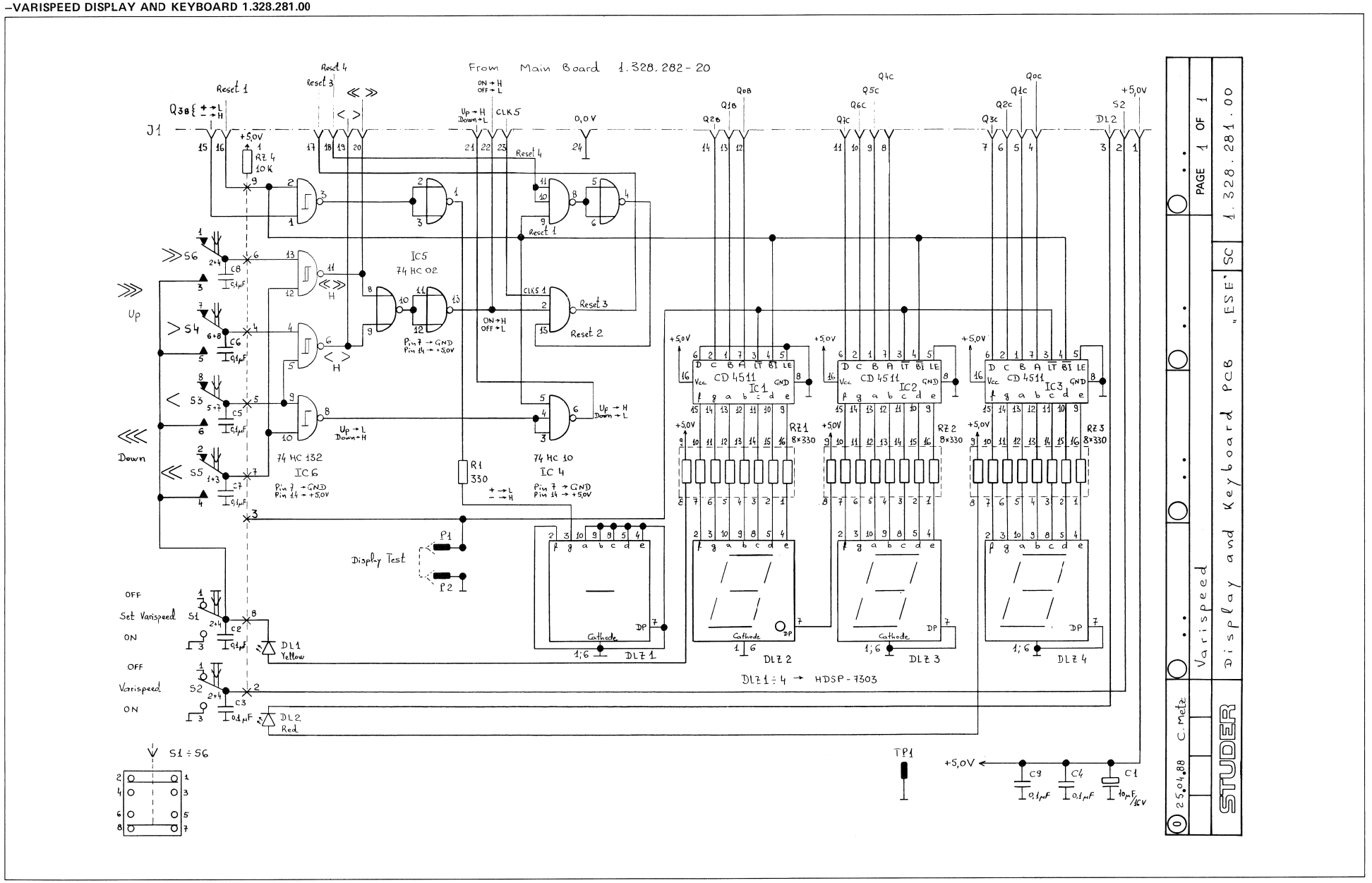

VARISPEED CONTROLER 1.328.280.00
–VARISPEED DISPLAY AND KEYBOARD 1.328.281.00

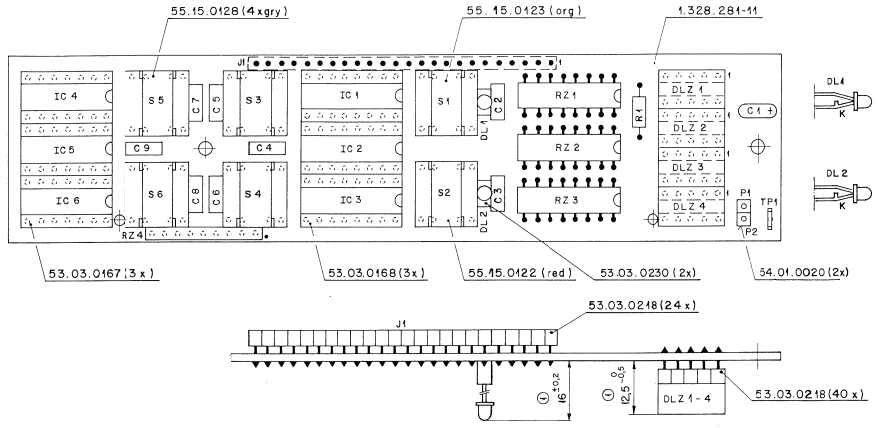

IND.	POS.NO.	PART NO.	VALUE	SPECIFICATIONS / EQUIVALENT	MANUF.
	C.....1	59.26.2100	10 u	20%, 16V , SAL	
	C.....2	59.06.0104	.1 u	10%, 63V , PETP	
	C.....3	59.06.0104	.1 u	10%, 63V , PETP	
	C.....4	59.06.0104	.1 u	10%, 63V , PETP	
	C.....5	59.06.0104	.1 u	10%, 63V , PETP	
	C.....6	59.06.0104	.1 u	10%, 63V , PETP	
	C.....7	59.06.0104	.1 u	10%, 63V , PETP	
	C.....8	59.06.0104	.1 u	10%, 63V , PETP	
	C.....9	59.06.0104	.1 u	10%, 63V , PETP	
	DL....1	50.04.2130	LY 3160	Diffused yellow.	Sie.
	DL....2	50.04.2129	LS 3160	Diffused red.	Sie.
	DLZ...1	73.01.0128	HDSP-7303	Red Micro-Bright 7 Seg. Display, 7.6 mm.	HP.
	DLZ...2	73.01.0128	HDSP-7303	Red Micro-Bright 7 Seg. Display, 7.6 mm.	HP.
	DLZ...3	73.01.0128	HDSP-7303	Red Micro-Bright 7 Seg. Display, 7.6 mm.	HP.
	DLZ...4	73.01.0128	HDSP-7303	Red Micro-Bright 7 Seg. Display, 7.6 mm.	HP.
	IC....1	50.07.0511	CD 4511	BCD-to-7 Seg. Latch/Decoder/Driver.	
	IC....2	50.07.0511	CD 4511	BCD-to-7 Seg. Latch/Decoder/Driver.	
	IC....3	50.07.0511	CD 4511	BCD-to-7 Seg. Latch/Decoder/Driver.	
	IC....4	50.17.1010	74 HC 10	Triple 3-Input NAND Gate.	
	IC....5	50.17.1002	74 HC 02	Quad 2-Input NOR Gate.	
	IC....6	50.17.1132	74 HC 132	Quad 2-Input Schmitt Trigger NAND Gate.	
	J.....1	53.03.0218	24 * 1 pin	Straight socket strip (24 pcs.)	
	P.....1	54.01.0020	0.63*0.63	Straight soldering male pin.	
	P.....2	54.01.0020	0.63*0.63	Straight soldering male pin.	
	R.....1	57.11.3331	330	1%, 0207 , MF	
	RZ....1	57.88.3331	8 * 330	2%, DIL16	
	RZ....2	57.88.3331	8 * 330	2%, DIL16	
	RZ....3	57.88.3331	8 * 330	2%, DIL16	
	RZ....4	57.88.4103	8 * 10 k	2%, SIP 9	

IND.	POS.NO.	PART NO.	VALUE	SPECIFICATIONS / EQUIVALENT	MANUF.
	S.....1	55.15.0113	2 * U	Push-Push Button Schwitch.	MEC.
	S.....2	55.15.0113	2 * U	Push-Push Button Schwitch.	MEC.
	S.....3	55.15.0112	2 * U	Momentary Push Button Switch.	MEC.
	S.....4	55.15.0112	2 * U	Momentary Push Button Switch.	MEC.
	S.....5	55.15.0112	2 * U	Momentary Push Button Switch.	MEC.
	S.....6	55.15.0112	2 * U	Momentary Push Button Switch.	MEC.
	TP....1	54.02.0320	2.8 * 0.8	Straight soldering strip.	

Note : DL 1 and DL 2 are mounted on LED sockets 253.03.0230 (2 pcs.)
Devices DLZ 1-to-4 are mounted on 2 * 5 pcs. 253.03.0218 pins.

SAL=Solid Aluminium, PETP=Polyester, MF=Metal Film.

MANUFACTURERS :

HP = Hewlet Packard
MEC = Mekanisk Elektrisk Compagni af 1975
Sie = Siemens

DAIG 88/02/11

VARISPEED CONTROLER 1.328.280.00
–VARISPEED MAIN BOARD 1.328.282.20

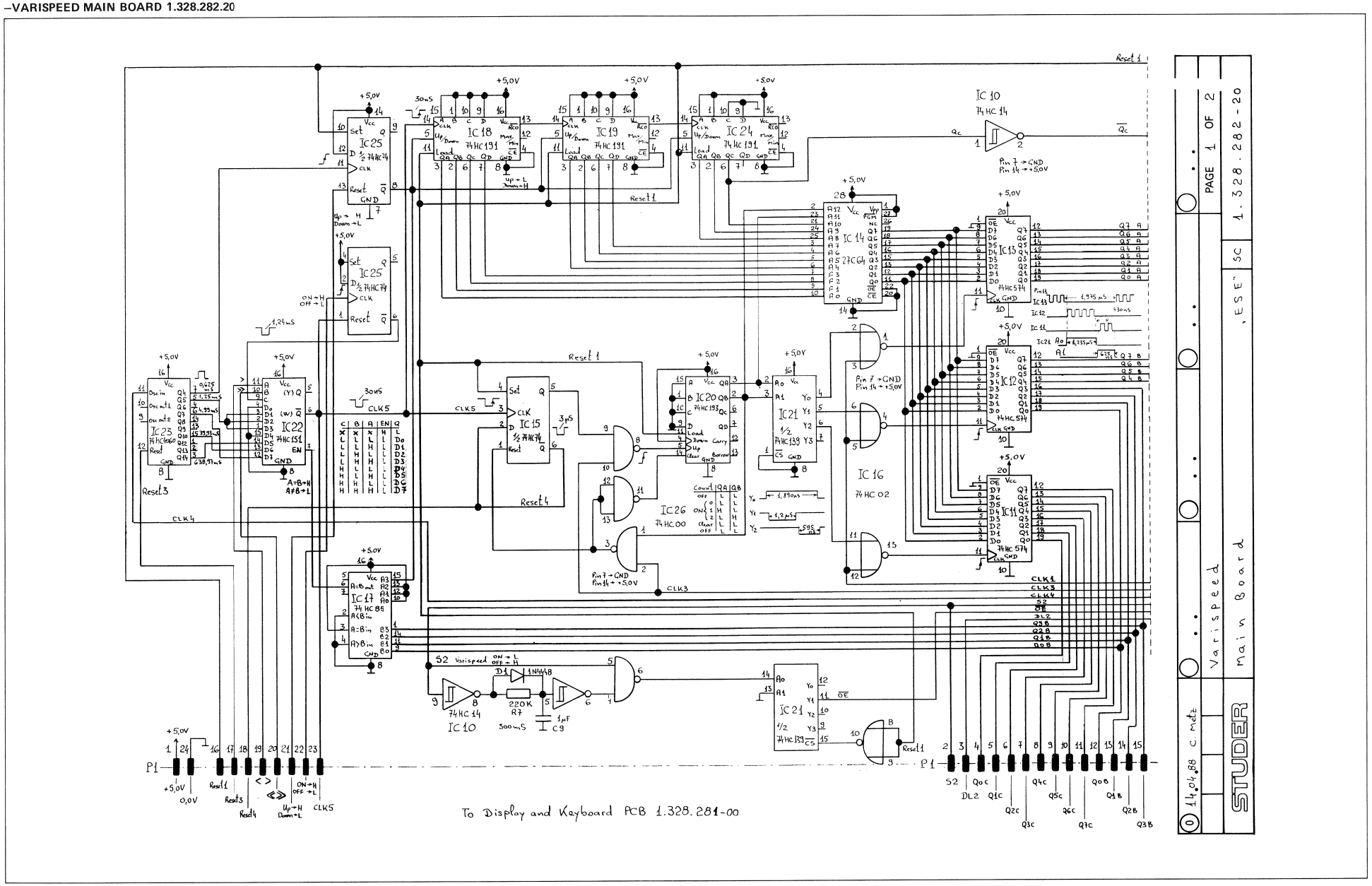

VARISPEED CONTROLER 1.328.280.00
–VARISPEED MAIN BOARD 1.328.282.20

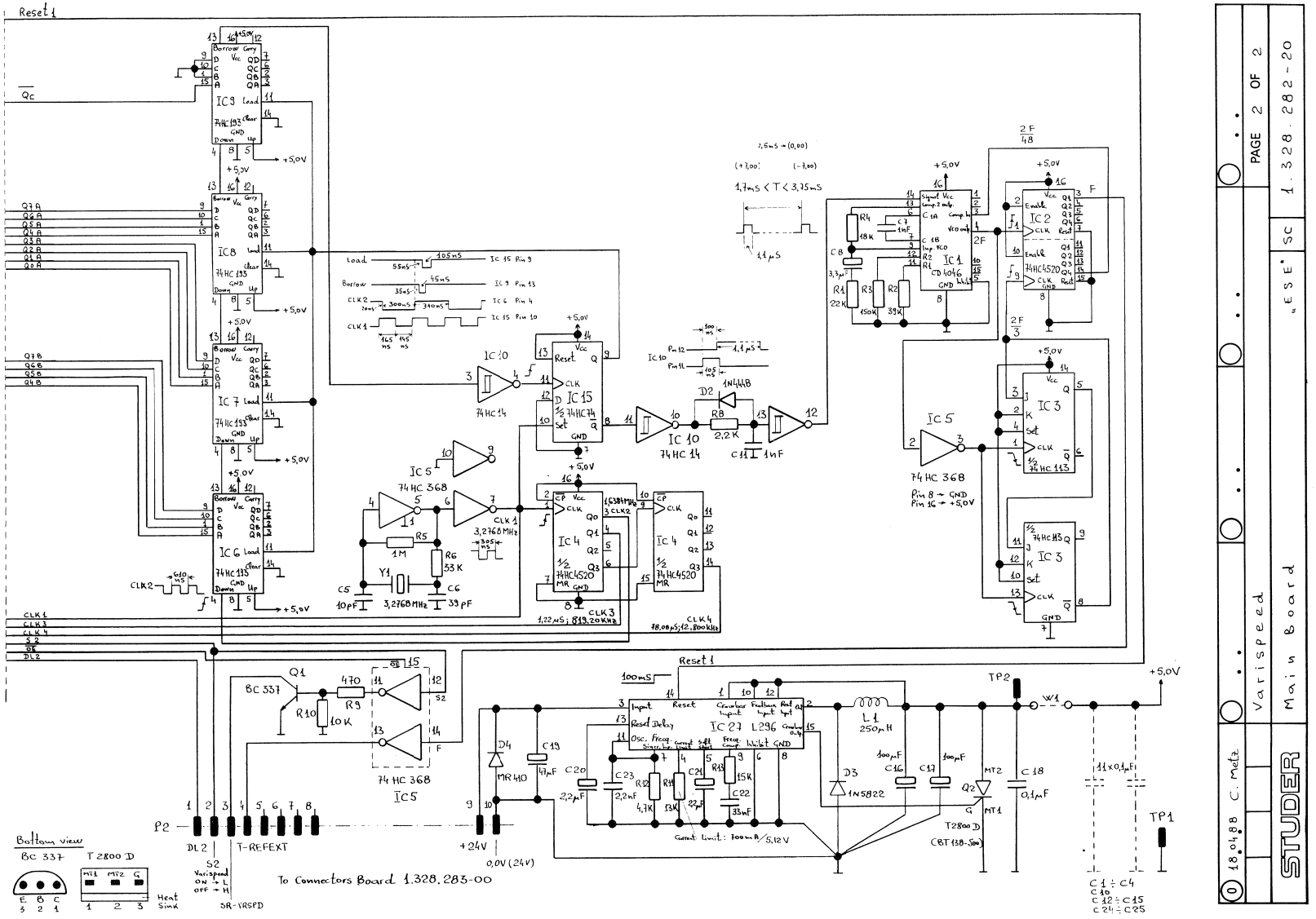

VARISPEED CONTROLER 1.328.280.00
–VARISPEED MAIN BOARD 1.328.282.20

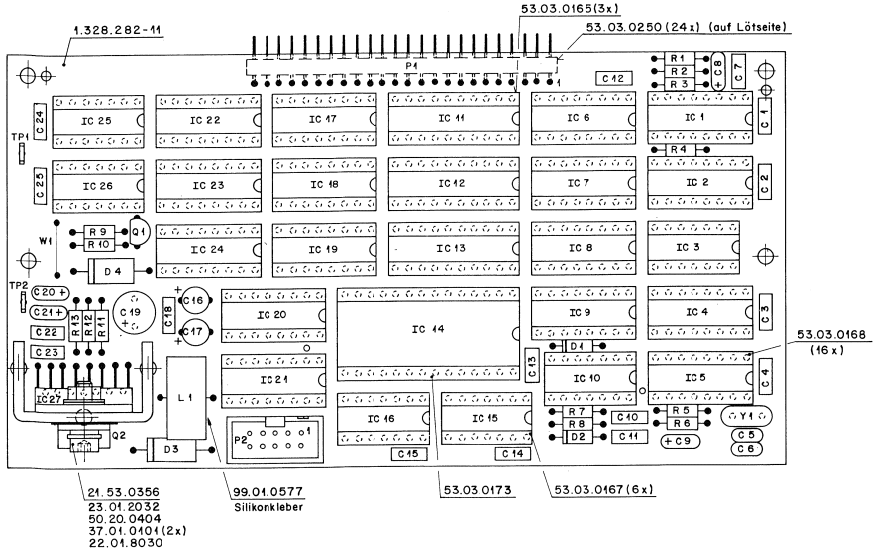

IND.	POS.NO.	PART NO.	VALUE	SPECIFICATIONS / EQUIVALENT	MANUF.
	C.....1	59.06.0104	.1 u	10%, 63V, PETP	
	C.....2	59.06.0104	.1 u	10%, 63V, PETP	
	C.....3	59.06.0104	.1 u	10%, 63V, PETP	
	C.....4	59.06.0104	.1 u	10%, 63V, PETP	
	C.....5	59.34.1100	10 p	5%, NP 0, CER	
	C.....6	59.34.2390	39 p	5%, 4150, CER	
	C.....7	59.06.0102	1000 p	10%, 63V, PETP	
	C.....8	59.26.2339	3.3 u	20%, 16V, SAL	
	C.....9	59.26.5109	1 u	20%, 25V, SAL	
	C.....10	59.06.0104	.1 u	10%, 63V, PETP	
	C.....11	59.06.0102	1000 p	10%, 63V, PETP	
	C.....12	59.06.0104	.1 u	10%, 63V, PETP	
	C.....13	59.06.0104	.1 u	10%, 63V, PETP	
	C.....14	59.06.0104	.1 u	10%, 63V, PETP	
	C.....15	59.06.0104	.1 u	10%, 63V, PETP	
	C.....16	59.22.4101	100 u	-20%, 16V, EL	
	C.....17	59.22.4101	100 u	-20%, 16V, EL	
	C.....18	59.06.0104	.1 u	10%, 63V, PETP	
	C.....19	59.22.6473	47 u	-20%, 40V, EL	
	C.....20	59.26.2229	2.2 u	20%, 16V, SAL	
	C.....21	59.26.2229	2.2 u	20%, 16V, SAL	
	C.....22	59.06.0333	.033 u	10%, 63V, PETP	
	C.....23	59.06.0222	2200 p	10%, 63V, PETP	
	C.....24	59.06.0104	.1 u	10%, 63V, PETP	
	C.....25	59.06.0104	.1 u	10%, 63V, PETP	
	D.....1	50.04.0125	1N 4448	75 V, 0.1 A, 4 ns, Si.	
	D.....2	50.04.0125	1N 4448	75 V, 0.1 A, 4 ns, Si.	
	D.....3	50.04.0519	1 N 5822	40 V, 3 A, Schottky.	Mot.
	D.....4	50.04.0521	MUR 410	100 V, 5 A, Si.	Mot.
	IC.....1	50.07.0096	MC 14046 B	Phase-Locked Loop.	Mot.
	IC.....2	50.17.4520	74 HC 4520	Dual 4-Bit Binary Counter.	
	IC.....3	50.17.1113	74 HC 113	Dual J-K Flip-Flop with Set.	
	IC.....4	50.17.4520	74 HC 4520	Dual 4-Bit Binary Counter.	
	IC.....5	50.17.1368	74 HC 368	Hex 3-State Inv. Buff., 2-Bit & 4-Bit Sect.	
	IC.....6	50.17.1193	74 HC 193	Preset. 4-Bit Bin. Up/Down Count. with Reset	

IND.	POS.NO.	PART NO.	VALUE	SPECIFICATIONS / EQUIVALENT	MANUF.
	IC.....7	50.17.1193	74 HC 193	Preset. 4-Bit Bin. Up/Down Count. with Reset	
	IC.....8	50.17.1193	74 HC 193	Preset. 4-Bit Bin. Up/Down Count. with Reset	
	IC.....9	50.17.1193	74 HC 193	Preset. 4-Bit Bin. Up/Down Count. with Reset	
	IC.....10	50.17.1014	74 HC 14	Hex Schmitt-Trigger Inverter.	
	IC.....11	50.17.1574	74 HC 574	Octal 3-State Noninverting D-Type Flip-Flop.	
	IC.....12	50.17.1574	74 HC 574	Octal 3-State Noninverting D-Type Flip-Flop.	
	IC.....13	50.17.1574	74 HC 574	Octal 3-State Noninverting D-Type Flip-Flop.	
	IC.....14	1.328.981.20		SW 51/87 VARISPEED CONTROLLER	St.
	IC.....15	50.17.1074	74 HC 74	Dual D-Type Flip-Flop with Set & Reset.	
	IC.....16	50.17.1002	74 HC 02	Quad 2-Input NOR Gate.	
	IC.....17	50.17.1085	74 HC 85	4-Bit Magnitude Comparator.	
	IC.....18	50.17.1191	74 HC 191	Presettable 4-Bit Binary Up/Down Counter.	
	IC.....19	50.17.1191	74 HC 191	Presettable 4-Bit Binary Up/Down Counter.	
	IC.....20	50.17.1193	74 HC 193	Preset. 4-Bit Bin. Up/Down Count. with Reset	
	IC.....21	50.17.1139	74 HC 139	Dual 1-of-4 Decoder/Demultiplexer.	
	IC.....22	50.17.1151	74 HC 151	8 Input Data Selector/Multiplexer.	
	IC.....23	50.17.4060	74 HC 4060	14 Stage Binary Ripple Counter with Osc.	
	IC.....24	50.17.1191	74 HC 191	Presettable 4-Bit Binary Up/Down Counter.	
	IC.....25	50.17.1074	74 HC 74	Dual D-Type Flip-Flop with Set & Reset.	
	IC.....26	50.17.1000	74 HC 00	Quad 2-Input NAND Gate.	
	IC.....27	50.10.0110	L 296	High Current Switching Voltage Regulator SGS	
	L.....1	62.03.0005	250 uH	1 A, Toroidal Choke.	St.
	P.....1	53.03.0253	24 * 1 pin	Right Angle Male Contact Strip. (24 pcs.)	
	P.....2	54.14.2001	2 * 5 pins	Straight Print Male Connector.	
	Q.....1	50.03.0343	BC 337-25	45 V, 0.8 A, Si, NPN.	
	Q.....2	50.99.0106	T 2800 D	400 V, 8 A, Triac.	RCA.
	R.....1	57.11.3223	22 k	1%, 0207, MF	
	R.....2	57.11.3393	39 k	1%, 0207, MF	
	R.....3	57.11.3154	150 k	1%, 0207, MF	
	R.....4	57.11.3103	10 k	1%, 0207, MF	
	R.....5	57.11.3105	1 M	1%, 0207, MF	
	R.....6	57.11.3333	33 k	1%, 0207, MF	
	R.....7	57.11.3224	220 k	1%, 0207, MF	

IND.	POS.NO.	PART NO.	VALUE	SPECIFICATIONS / EQUIVALENT	MANUF.
	R.....8	57.11.3222	2.2 k	1%, 0207, MF	
	R.....9	57.11.3471	470	1%, 0207, MF	
	R.....10	57.11.3103	10 k	1%, 0207, MF	
	R.....11	57.11.3133	13 k	1%, 0207, MF	
	R.....12	57.11.3472	4.7 k	1%, 0207, MF	
	R.....13	57.11.3153	15 k	1%, 0207, MF	
	TP.....1	54.02.0320	2.8 * 0.8	Straight Soldering Strip.	
	TP.....2	54.02.0320	2.8 * 0.8	Straight Soldering Strip.	
	W.....1	1.010.324.64	4.3 * 10.2	Bridge.	
	Y.....1	89.01.0376	3.2768 MHz	HC 18 U Ceramic Resonator.	

CER=Ceramic, EL=Electrolytic, PETP=Polyester, SAL=Solid Aluminium,
MF=Metal Film.

MANUFACTURERS :

Mot = Motorola
RCA = RCA Corporation
SGS = SGS Microelettronica Sp A
St = Studer

DRIG 88/03/08

VARISPEED CONTROLER 1.328.280.00
–VARISPEED CONNECTORS BOARD 1.328.283.00

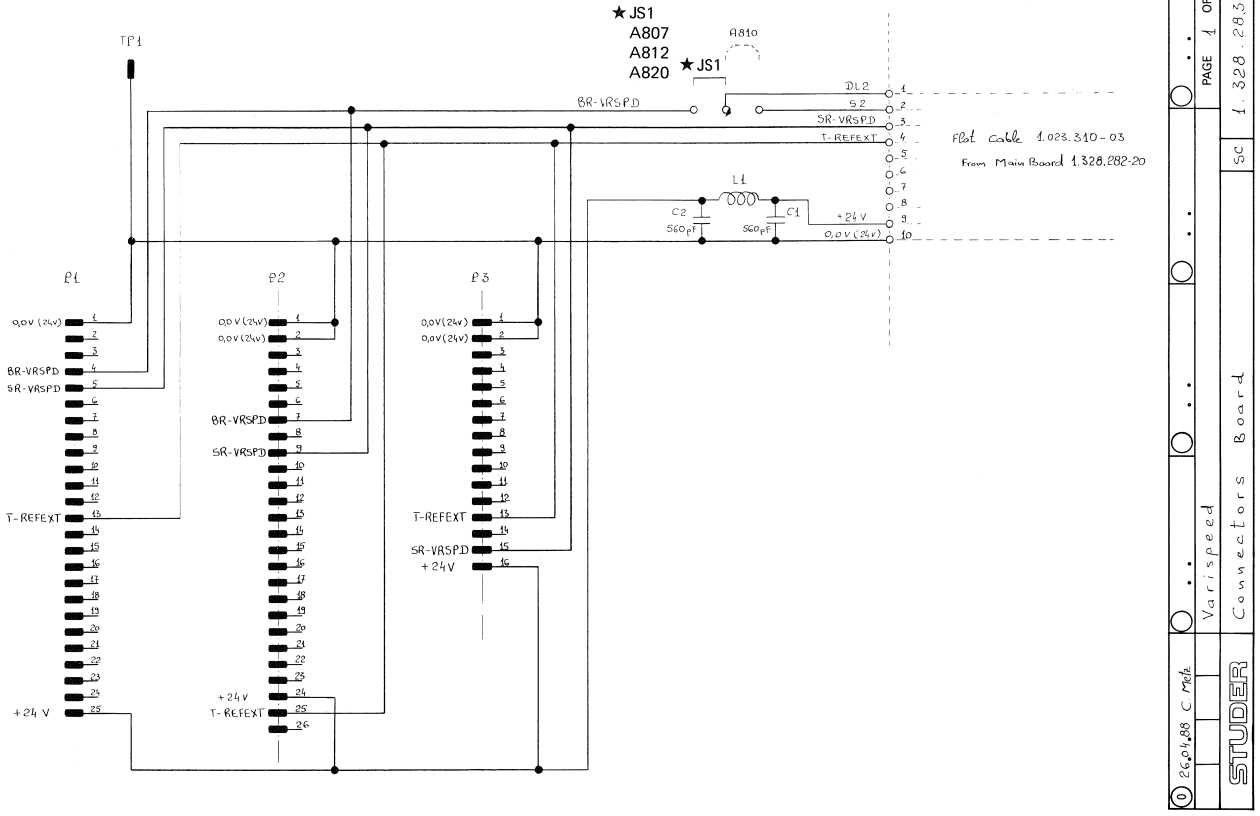

REMOTE TIMER (RS232) 1.328.275.00

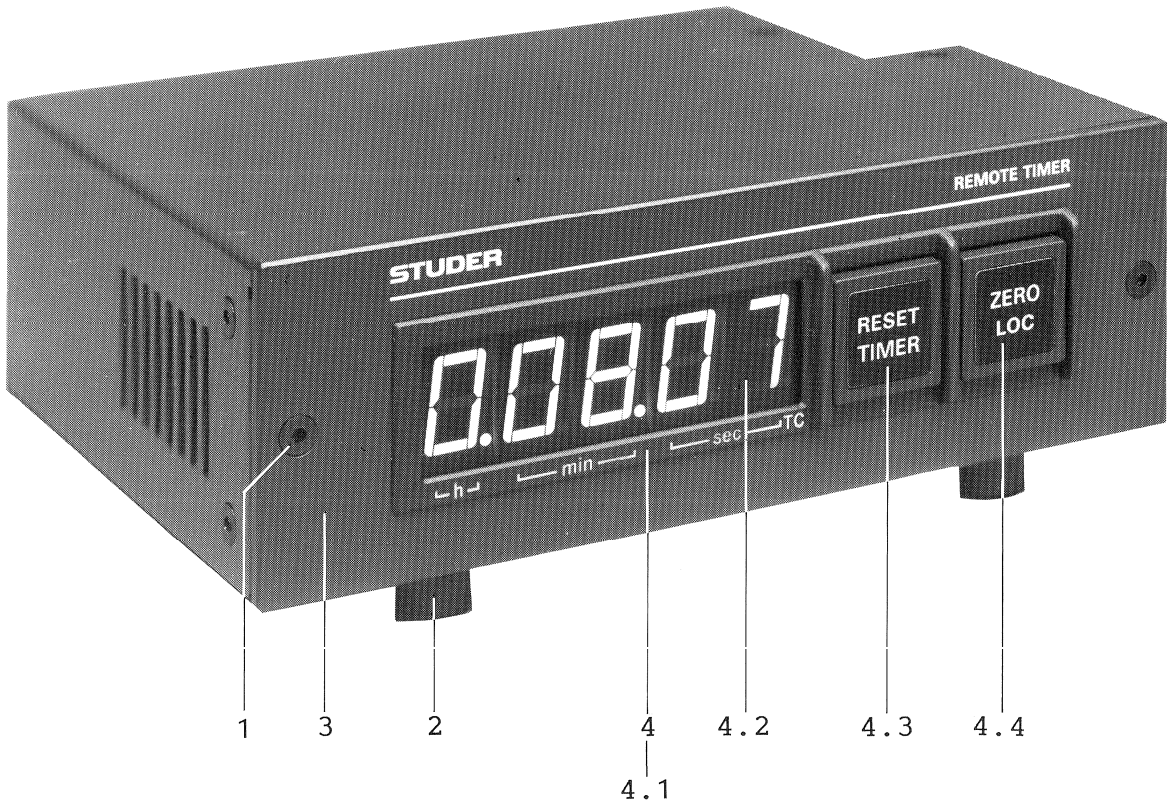

REMOTE TIMER (RS232) 1.328.275.00

Pos.	QTY.	Order Number	Part Name	Specification
1	17	1.010.045.21	Countersunk allen screw, blk	M3 x 6
	2	21.51.23.54	Countersunk allen screw, Ni	M3 x 5
2	4	31.02.0211	Foot	D16 x 6,5
3	1	1.328.275.01	Front cover	
4	1	1.810.253.00	Display cover compl.	
4.1	1	1.810.303.01	Display cover	
4.2	1	1.810.303.02	Glas pane	
4.3	1	1.011.210.14	Label ZERO TIMER	
	1	1.011.210.01	Push button	
4.4	1	1.011.210.15	Label ZERO LOC	
	1	1.011.210.01	Push button	

ZUBEHÖR

ACCESSORIES

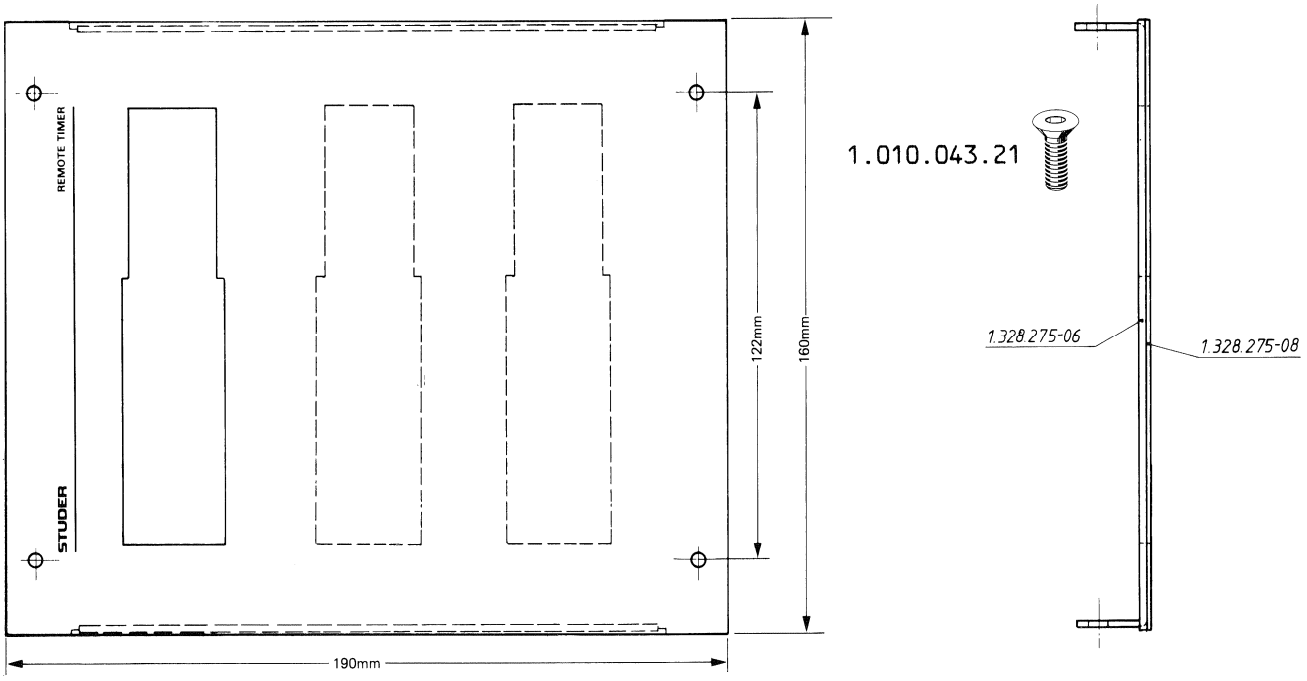

Pos.	QTY.	Order Number	Part Name	Specification
9		1.328.275.31	Mounting frame for 1 counter	
10		1.328.275.32	Mounting frame for 2 counter	
11		1.328.275.33	Mounting frame for 3 counter	

REMOTE TIMER (RS 232) 1.328.275.00
–CPU BOARD 1.328.276.20

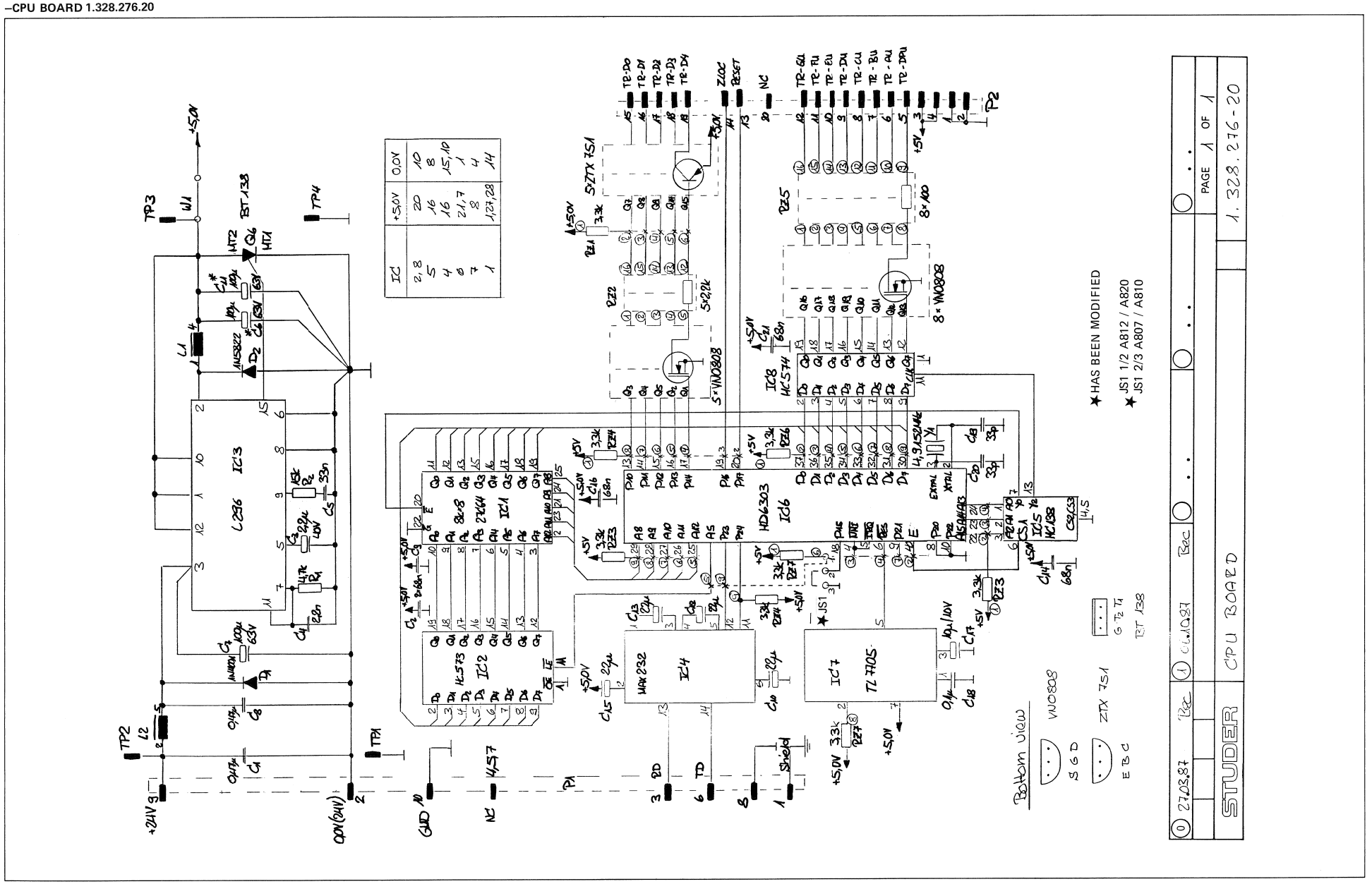

REMOTE TIMER (RS 232) 1.328.275.00
–CPU BOARD 1.328.276.20

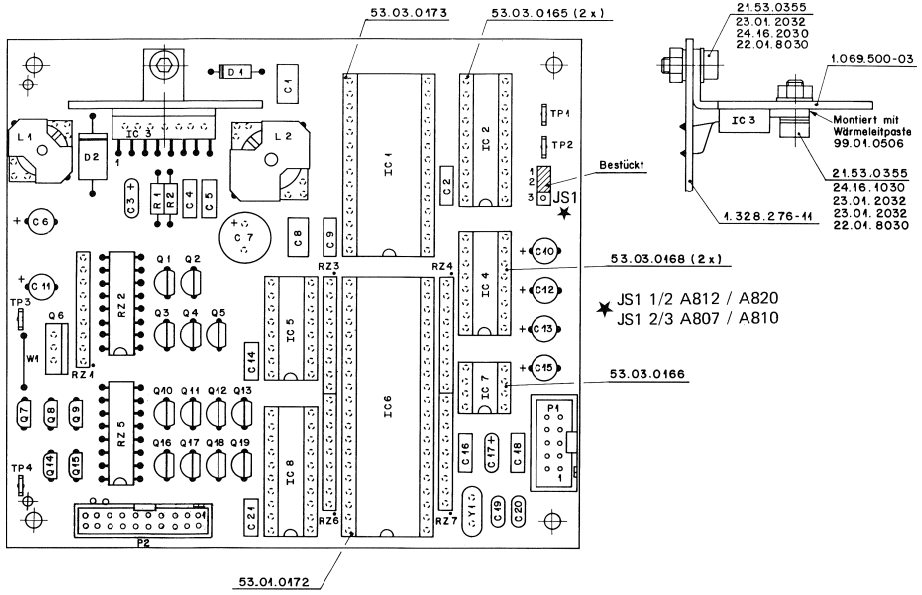

IND.	POS.NO.	PART NO.	VALUE	SPECIFICATIONS / EQUIVALENT	MANUF.
	C.....1	59.06.0474	.47 u	10%, 63V , PeTP	
	C.....2	59.06.0683	.068 u	10%, 63V , PeTP	
	C.....3	59.26.5229	2.2 u	20%, 25V , SAL	
	C.....4	59.06.0222	2200 p	10%, 63V , PeTP	
	C.....5	59.06.0333	.033 u	10%, 63V , PeTP	
(01)	C.....6	59.22.3101	100 u	-20%, 10V , EL	
	C.....7	59.22.8101	100 u	-20%, 63V , EL	
	C.....8	59.06.0474	.47 u	10%, 63V , PeTP	
	C.....9	59.06.0683	.068 u	10%, 63V , PeTP	
	C.....10	59.22.6220	22 u	-20%, 40V , EL	
(01)	C.....11	59.22.3101	100 u	-20%, 10V , EL	
	C.....12	59.22.6220	22 u	-20%, 40V , EL	
	C.....13	59.22.6220	22 u	-20%, 40V , EL	
	C.....14	59.06.0683	.068 u	10%, 63V , PeTP	
	C.....15	59.22.6220	22 u	-20%, 40V , EL	
	C.....16	59.06.0683	.068 u	10%, 63V , PeTP	
	C.....17	59.26.2100	10 u	20%, 16V , SAL	
	C.....18	59.06.0104	.1 u	10%, 63V , PeTP	
	C.....19	59.34.2331	33 p	5%, N150 , CER	
	C.....20	59.34.2330	33 p	5%, N150 , CER	
	C.....21	59.06.0683	.068 u	10%, 63V , PeTP	
	D.....1	50.04.0122	1N 4001	50 V, 1 A, Si	
	D.....2	50.04.0519	1N 5822	40 V, 3 A, Schottky	
	IC.....1	1.328.982.20		SW 50/87 REMOTE TIMER	St
	IC.....2	53.17.1573	74 HC 573	3-state Octal D-Type Latch	
	IC.....3	50.10.0110	L 296	Switching Voltage Regulator	SGS
	IC.....4	50.15.0120	MAX 232CPE	RS 232 Transmitter/Receiver	MAX
	IC.....5	50.17.1138	74 HC 138	1-of-8 Decoder/Demultiplexer	
	IC.....6	50.14.0119	HD 63B03MP	Microcomputer Unit CMOS, 8 Bit, 2 MHz	Hi
	IC.....7	50.11.0122	TL 7705ACP	Reset Generator	TI
	IC.....8	50.17.1574	74 HC 574	3-state Non Inverting Octal D-Type Flip-Flop	
	JS.....1	54.01.0021	2 * 0.63	Jumper (bridging 2 of 3 pins 54.01.0020)	
	L.....1	1.322.191.00		Inductor	St

IND.	POS.NO.	PART NO.	VALUE	SPECIFICATIONS / EQUIVALENT	MANUF.
	L.....2	1.322.252.00	0.32 uH	Filter Coil, 0.4 A	St
	P.....1	54.14.2001	2 * 5 Pin	Straight Print Male Connector	
	P.....2	54.14.2008	2 * 10 Pin	Straight Print Male Connector	
	Q.....1	50.03.1505	VN 0808 M	80 V, 0.35 A, FET N-Channel	Six
	Q.....2	50.03.1505	VN 0808 M	80 V, 0.35 A, FET N-Channel	Six
	Q.....3	50.03.1505	VN 0808 M	80 V, 0.35 A, FET N-Channel	Six
	Q.....4	50.03.1505	VN 0808 M	80 V, 0.35 A, FET N-Channel	Six
	Q.....5	50.03.1505	VN 0808 M	80 V, 0.35 A, FET N-Channel	Six
	Q.....6	50.99.0106	BT 138	400 V, 8 A, TRIAC	Ph
	Q.....7	50.03.0352	ZTX 751 S	60 V, 2 A, PNP Si	Fe
	Q.....8	50.03.0352	ZTX 751 S	60 V, 2 A, PNP Si	Fe
	Q.....9	50.03.0352	ZTX 751 S	60 V, 2 A, PNP Si	Fe
	Q.....10	50.03.1505	VN 0808 M	80 V, 0.35 A, FET N-Channel	Fe
	Q.....11	50.03.1505	VN 0808 M	80 V, 0.35 A, FET N-Channel	Fe
	Q.....12	50.03.1505	VN 0808 M	80 V, 0.35 A, FET N-Channel	Fe
	Q.....13	50.03.1505	VN 0808 M	80 V, 0.35 A, FET N-Channel	Fe
	Q.....14	50.03.0352	ZTX 751 S	60 V, 2 A, PNP Si	Fe
	Q.....15	50.03.0352	ZTX 751 S	60 V, 2 A, PNP Si	Fe
	Q.....16	50.03.1505	VN 0808 M	80 V, 0.35 A, FET N-Channel	Six
	Q.....17	50.03.1505	VN 0808 M	80 V, 0.35 A, FET N-Channel	Six
	Q.....18	50.03.1505	VN 0808 M	80 V, 0.35 A, FET N-Channel	Six
	Q.....19	50.03.1505	VN 0808 M	80 V, 0.35 A, FET N-Channel	Six
	R.....1	57.11.4472	4.7 k	2%, 0207 , MF	
	R.....2	57.11.4153	15 k	2%, 0207 , MF	
	RZ.....1	57.88.4332	8 * 3.3 k	2%, SIP 9	
	RZ.....2	57.88.3222	8 * 2.2 k	2%, DIL 16	
	RZ.....3	57.88.4332	8 * 3.3 k	2%, SIP 9	
	RZ.....4	57.88.4332	8 * 3.3 k	2%, SIP 9	
	RZ.....5	57.88.3101	8 * 100	2%, DIL 16	
	RZ.....6	57.88.4332	8 * 3.3 k	2%, SIP 9	
	RZ.....7	57.88.4332	8 * 3.3 k	2%, SIP 9	
	TP.....1	54.02.0320	2.8 * 0.8	Straight Soldering Pin	

IND.	POS.NO.	PART NO.	VALUE	SPECIFICATIONS / EQUIVALENT	MANUF.
	TP.....2	54.02.0320	2.8 * 0.8	Straight Soldering Pin	
	TP.....3	54.02.0320	2.8 * 0.8	Straight Soldering Pin	
	TP.....4	54.02.0320	2.8 * 0.8	Straight Soldering Pin	
	Y.....1	89.01.0560	4.9152 MHz		
	W.....1	1.010.324.64	4.3 * 10.2	Bridge	St

Index 01 : C 6 & C 11 capacitors 100 uF/63 V are replaced with 100 uF/10 V.

CER=Ceramic, EL=Electrolytic, MP=Metallized Paper, MPC=Metallized Polycarbonate, MPETP=Metallized Polyester, PC=Polycarbonate, PETP=Polyester
PP=Polypropylene, PS=Polystyrol, SAL=Solid Aluminium, TA=Tantal
Cermet=Ceramic Metal, MF=Metal Film,

MANUFACTURERS :

Fe = Ferranti
Hi = Hitachi
MAX = MAXIM
Ph = Philips (incl. Valvo)
SGS = SGS Microelettronica Sp A
Six = Siliconix
St = Studer
TI = Texas Instruments

ORIG 87/10/06

REMOTE TIMER (RS 232) 1.328.275.00
–DISPLAY BOARD 1.328.277.00

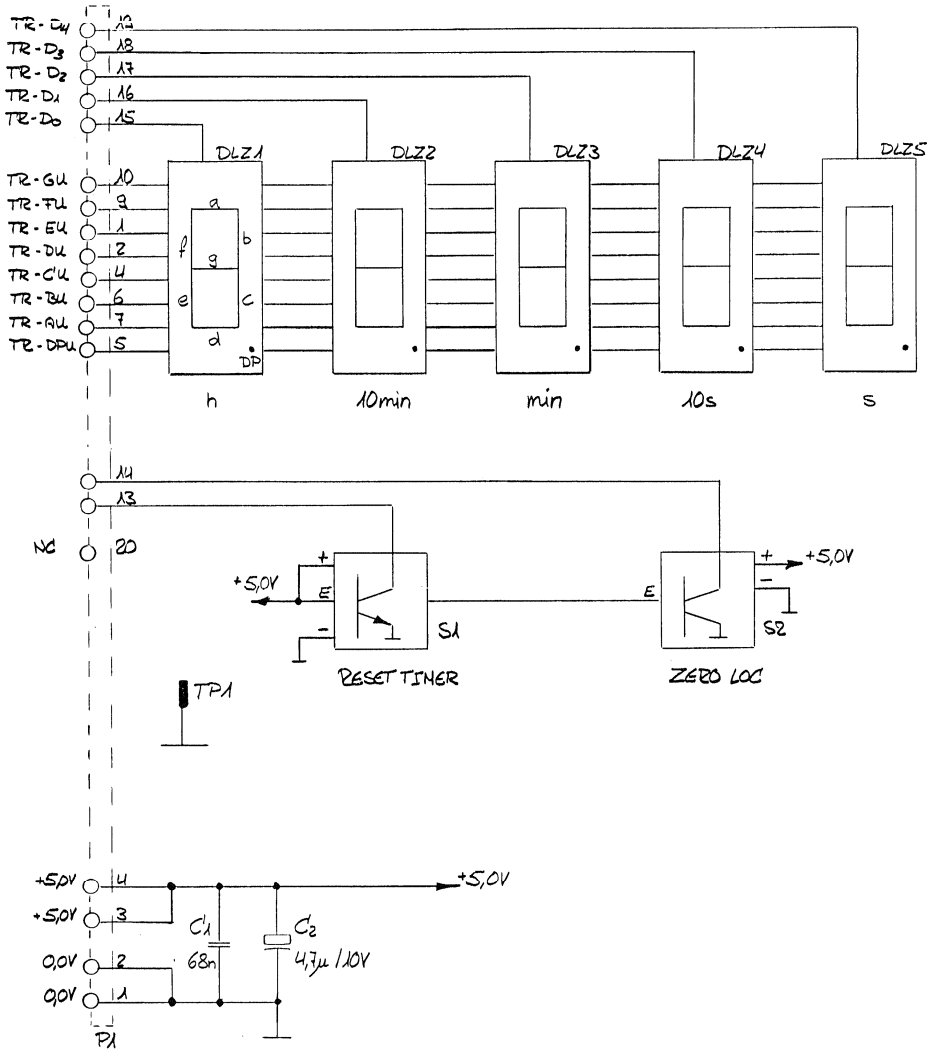

0 10.04.87 BeC				
				PAGE 1 OF 1
STUDER	DISPLAY BOARD			1.328.277-00

REMOTE TIMER (RS 232) 1.328.275.00
–DISPLAY BOARD 1.328.277.00

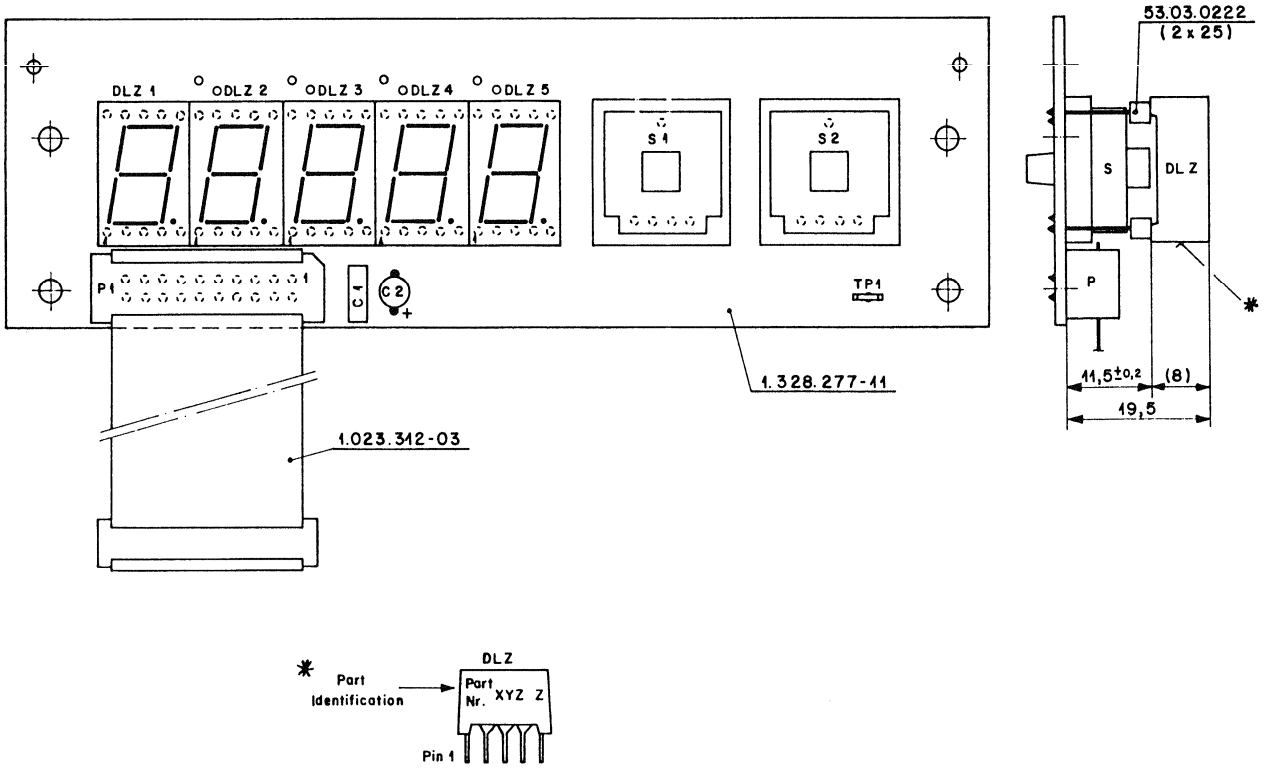

IND.	POS.NO.	PART NO.	VALUE	SPECIFICATIONS / EQUIVALENT	MANUF.
	C.....1	59.06.0683	.068 u	10%, 63V , PETP	
	C.....2	59.26.1479	4.7 u	20%, 10V , SAL	
	DLZ...1	73.01.0124	MAN 6660	7-Segm. orange LED display, common anode	GI
	DLZ...2	73.01.0124	MAN 6660	7-Segm. orange LED display, common anode	GI
	DLZ...3	73.01.0124	MAN 6660	7-Segm. orange LED display, common anode	GI
	DLZ...4	73.01.0124	MAN 6660	7-Segm. orange LED display, common anode	GI
	DLZ...5	73.01.0124	MAN 6660	7-Segm. orange LED display, common anode	GI
	P.....1			see Note 2	
	S.....1	55.03.0261	RS 76 C	Momentary Key Switch 1 * OC	Rf
	S.....2	55.03.0261	RS 76 C	Momentary Key Switch 1 * OC	Rf
	TP....1	54.02.0320	2.8 * 0.8	Straight soldering pin	

Index 01 : Part #53.03.0228 replaces part #53.03.0222
(10.11.88)

(01) Note 1 : All DLZ devices are plugged into socket terminal strips
#53.03.0228 (2 * 5 sockets for each device).
Note 2 : Print connector 54.14.5034 of the 20-connductors ribbon
cable #1.023.312.03 is soldered on print.

PETP=Polyester, SAL=Solid Aluminium

MANUFACTURERS :
GI = General Instruments
Rf = Rafi

ORIG 88/11/10

S T U D E R (01) 88/11/10 CM DISPLAY BOARD PL 1.328.277-00 PAGE 1

REMOTE TIMER/LAP MODE DISPLAY (SERIAL) 1.328.270.00

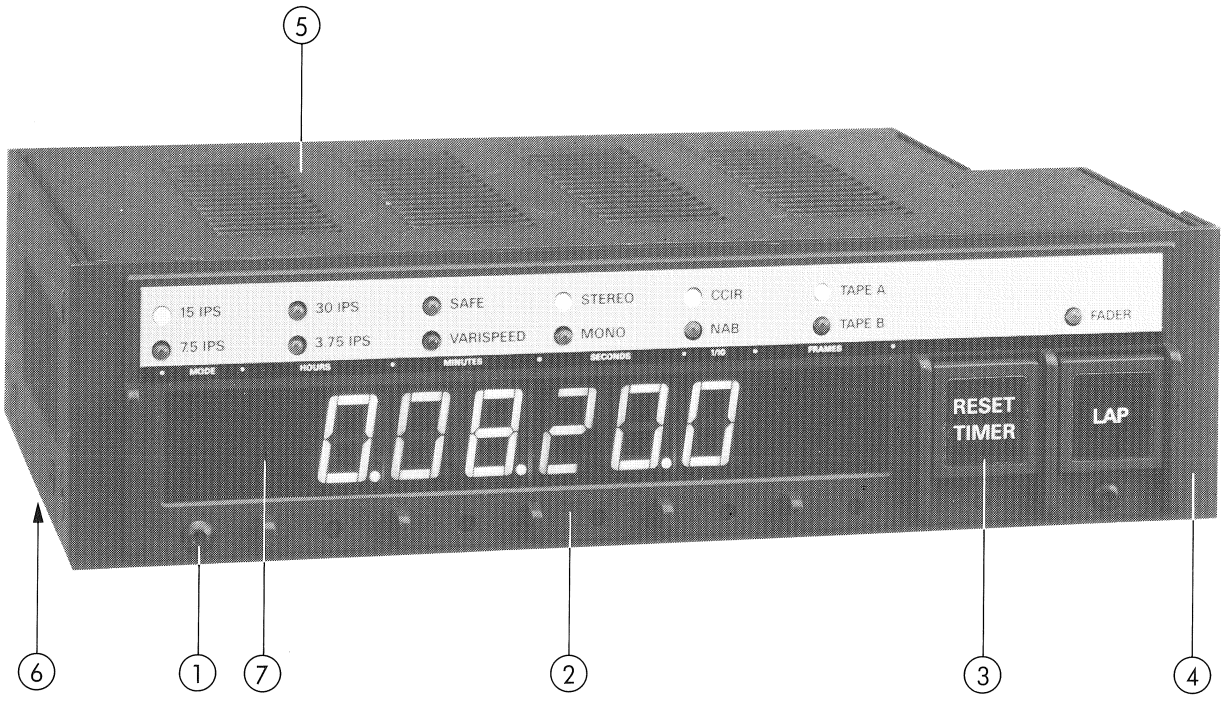

REMOTE TIMER/LAP MODE DISPLAY (SERIAL) 1.328.270.00

Pos.	QTY.	Order Number	Part Name	Specification
	1	1.328.270.00	Remote timer/lap mode display (self-adhesive Labels: see section 10.)	
	1 3 3 3	1.328.213.00 21.53.0354 23.01.1032 24.16.1030	STABILIZER PCB Allen screw Washer Fin washer	 M3 x 6
	1 4 3 3 1	1.328.272.24 21.53.0354 23.01.1032 24.16.1030 24.16.2030	TIMER DRIVER PCB Allen screw Washer Fin washer Serrated lock washer	 M3 x 6
	1 1 2 2 2	1.328.271.00 1.328.270.14 21.53.0354 23.01.1032 24.16.1030	TIMER DISPLAY PCB Insulation Allen screw Washer Fin washer	 M3 x 6
1	2	1.010.025.21	Oval head allen screw	M3 x 6
2	1 1	1.328.270.02 1.810.300.05	Push button housing Damping strip	
3	2 2	1.011.210.01 1.010.202.37	Push button Pressure spring	
4	1 4	1.328.270.01 1.010.034.21	Front cover Countersunk head allen screw	
5	1 6	1.328.274.00 1.010.045.21	Housing Countersunk head allen screw	
6	1 4	1.328.273.00 31.02.0211	Bottom cover Foot	
7	1	1.820.232.02	Filter screen red	

REMOTE TIMER/LAP MODE DISPLAY 1.328.270.00
–STABILIZER PCB 1.328.213.00

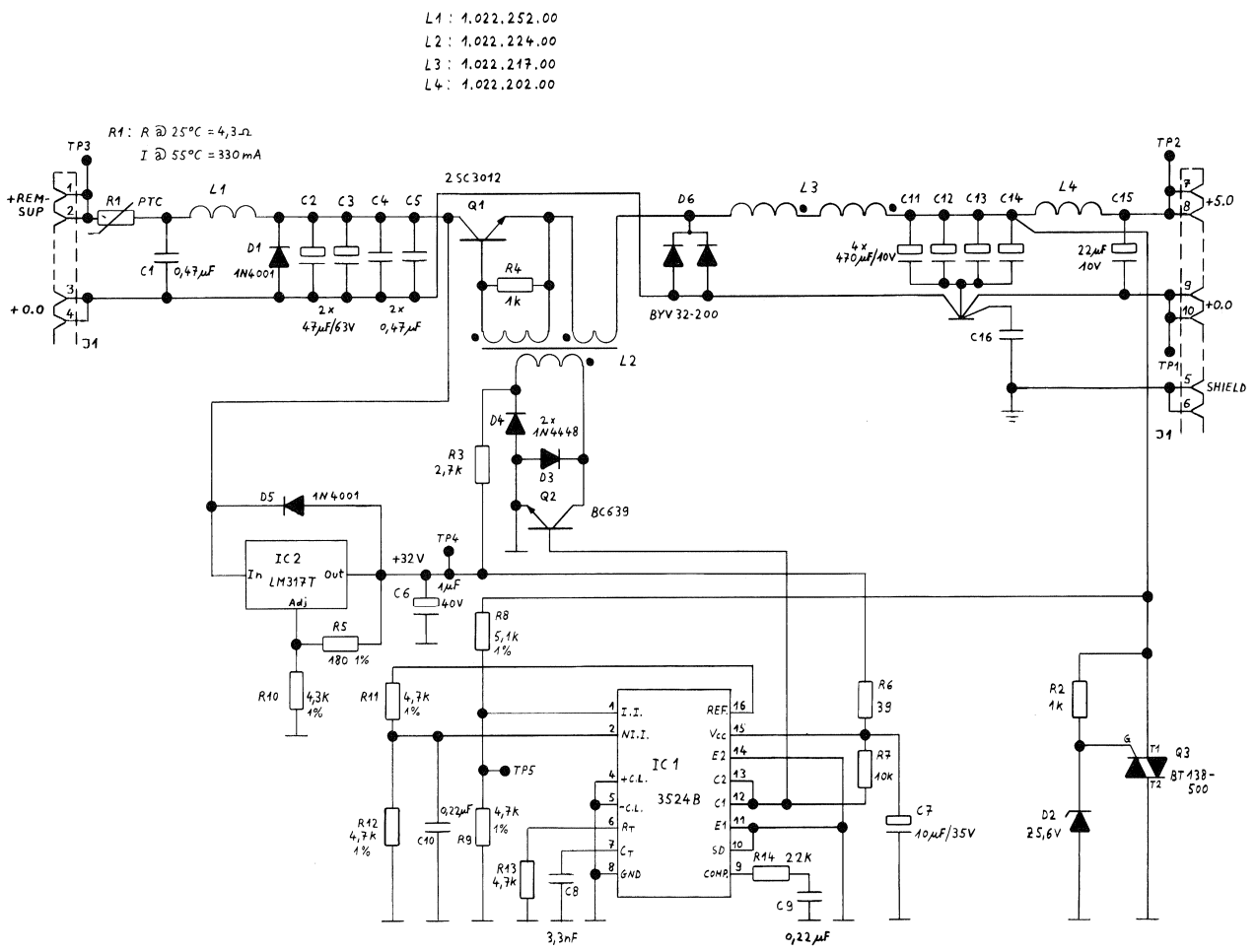

0 05.02.85 CHE				
	A820/A812			PAGE 1 OF 1
STUDER	STABILIZER BOARD		SC	1.328.213.00

REMOTE TIMER/LAP MODE DISPLAY 1.328.270.00
–STABILIZER PCB 1.328.213.00

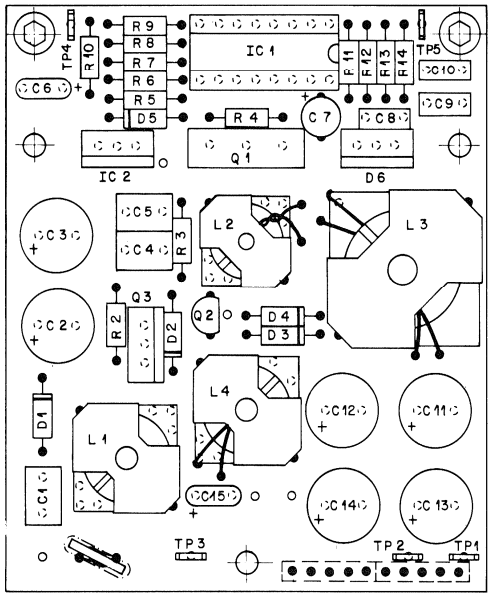

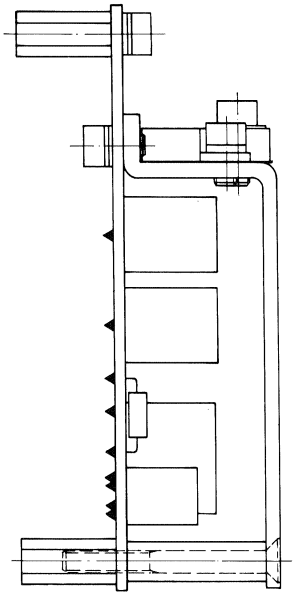

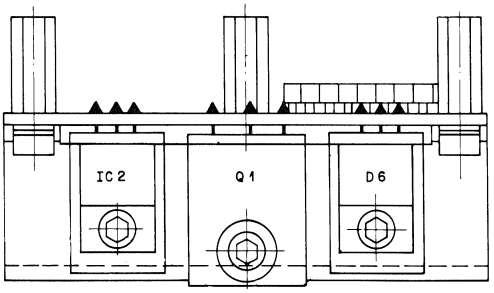

IND.	POS.NO.	PART NO.	VALUE	SPECIFICATIONS / EQUIVALENT	MANUF.
	R....01	57.92.1331	PTC	see note 2	Ph
	R....02	57.11.4102	1 kOhm	2%	
	R....03	57.11.4272	2.7 kOhm	2%	
	R....04	57.11.4102	1 kOhm	2%	
	R....05	57.11.3181	180 Ohm	1%	
	R....06	57.11.4390	39 Ohm	2%	
	R....07	57.11.4103	10 kOhm	2%	
	R....08	57.11.3512	5.1 kOhm	1%	
	R....09	57.11.3472	4.7 kOhm	1%	
	R....10	57.11.3432	4.3 kOhm	1%	
	R....11	57.11.3472	4.7 kOhm	1%	
	R....12	57.11.3472	4.7 kOhm	1%	
	R....13	57.11.4472	4.7 kOhm	2%	
	R....14	57.11.4223	22 kOhm	2%	
	P....01	54.02.0320	Test Point		
	P....02	54.02.0320	Test Point		
	P....03	54.02.0320	Test Point		
	P....04	54.02.0320	Test Point		
	P....05	54.02.0320	Test Point		

IND.	POS.NO.	PART NO.	VALUE	SPECIFICATIONS / EQUIVALENT	MANUF.
	C....01	59.06.0474	0.47 uF	10%, PETP	
	C....02	59.22.8470	47 uF	20%, 63V , EL	
	C....03	59.22.8470	47 uF	20%, 63V , EL	
	C....04	59.06.0474	0.47 uF	10%, PETP	
	C....05	59.06.0474	0.47 uF	10%, PETP	
	C....06	59.26.9109	1 uF	20%, 40V , SAL	
	C....07	59.22.6100	10 uF	-20%, 35V , EL	
	C....08	59.06.0332	3300 pF	10%, PETP	
	C....09	59.06.0224	0.22 uF	10%, PETP	
	C....10	59.06.0224	0.22 uF	10%, PETP	
	C....11	59.22.3471	470 uF	-20%, 10V , EL	
	C....12	59.22.3471	470 uF	-20%, 10V , EL	
	C....13	59.22.3471	470 uF	-20%, 10V , EL	
	C....14	59.22.3471	470 uF	-20%, 10V , EL	
	C....15	59.26.1220	22 uF	20%, 10V , SAL	
	D....01	50.04.0122	1N 4001		Mot
	D....02	50.04.1108	5.6 V	BZX83 C 5V6, BZX55 C 5V6, ZPD 5.6	Ses,ITT
	D....03	50.04.0125	1N 4448		Fc,ITT,Ph,Ses
	D....04	50.04.0125	1N 4448		Fc,ITT,Ph,Ses
	D....05	50.04.0122	1N 4001		Mot
	D....06	50.04.0517	BYV32-200		Mot,Ph
	IC...01	50.05.0279	SG 3524BN		SG
	IC...02	50.10.0104	LM 317T	LM 317 SP	Tho,Mot,NS,TI
	J....01			see note 1	
	L....01	1.022.252.00	0.32 mH	Filter Coil	St
	L....02	1.022.224.00		Power Supply Transformer	St
	L....03	1.022.217.00	46 uH	HF-Coil, 5A	St
	L....04	1.022.202.00	16.9 mH	Filter Coil	St
	Q....01	50.03.0517	2 SC 3012	NPN	NEC
	Q....02	50.03.0551	BC 639	NPN	Mot,Ph
	Q....03	50.99.0106	T 2800	400V, 8A,Triac	Ph

IND.	POS.NO.	PART NO.	VALUE	SPECIFICATIONS / EQUIVALENT	MANUF.

EL=Electrolytic, SAL=Solid Aluminium, PETP=Polyester

MANUFACTURERS: Fc=Fairchild, ITT=Intermetall, Mot=Motorola,
NEC=Nippon Electric Corp., NS=National Semiconductors,
Ph=Philips, Ses=Sescosem, SG=Silicon General, St=Studer
Tho=Thomson, TI=Texas Instruments

note 1 - Connector: 2 pieces Studer Nr.53030202

note 2 - PTC Thermistor: R @ 25 degree Celsius = 4.7 Ohm
I @ 55 degree Celsius = 330 mA
Philips Nr.2322 663 13311

ORIG 85/02/05

REMOTE TIMER/LAP MODE DISPLAY 1.328.270.00
–TIMER DISPLAY PCB 1.328.271.00

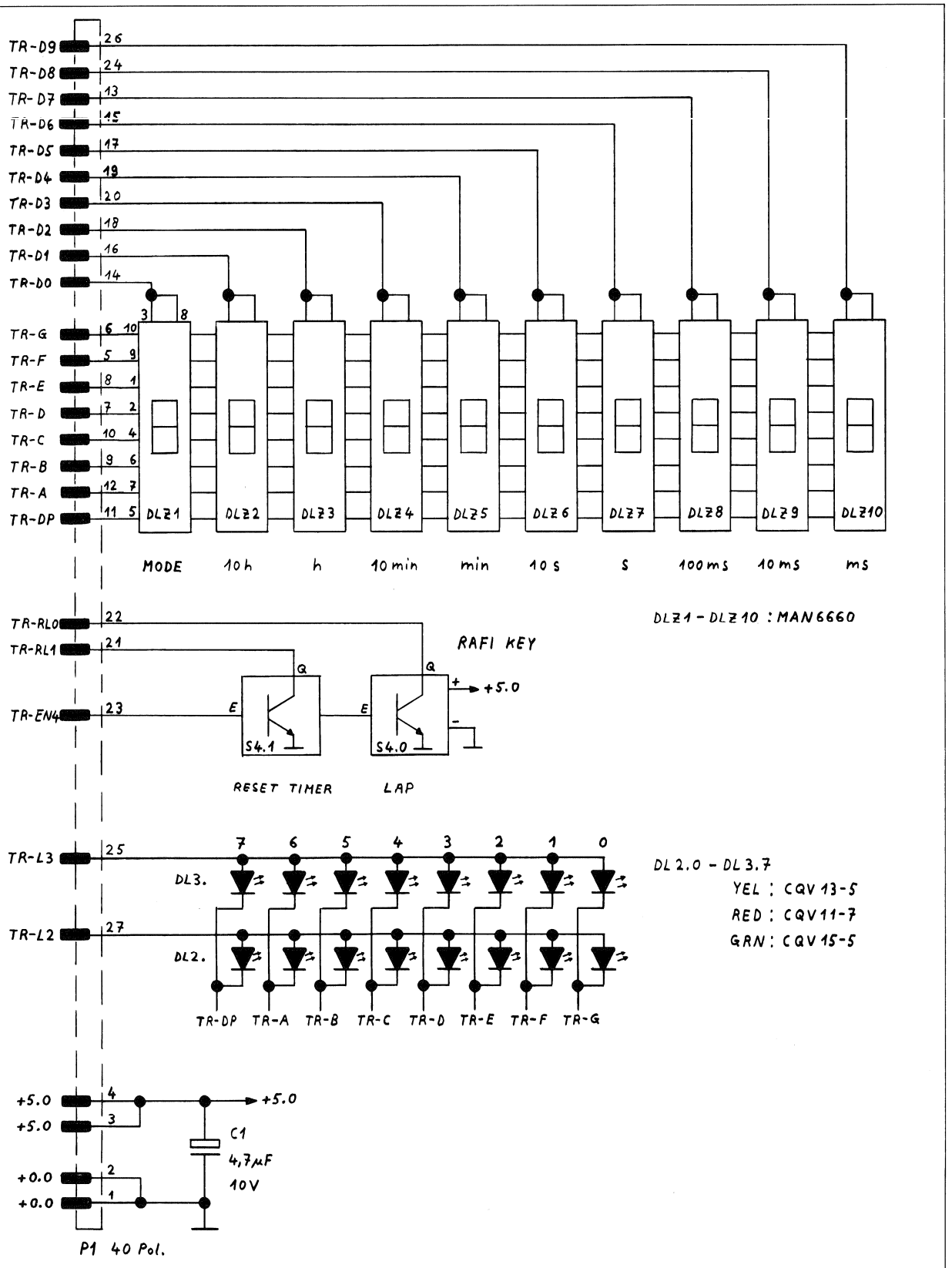

0 1.10.84 CHE		A820 /A812		
STUDER	TIMER DISPLAY BOARD	SC	1.328.271.00	PAGE 1 OF 1

REMOTE TIMER/LAP MODE DISPLAY 1.328.270.00
–TIMER DISPLAY PCB 1.328.271.00

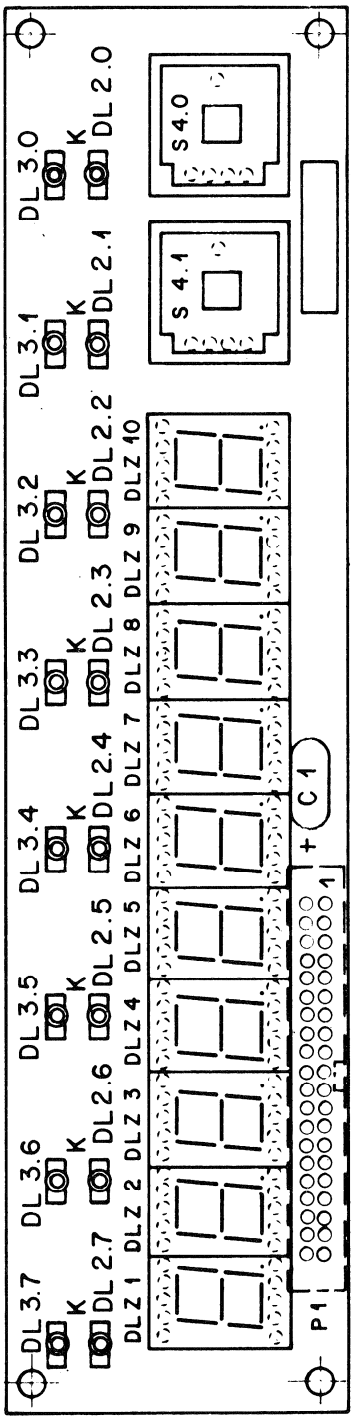

IND.	POS.NO.	PART NO.	VALUE	SPECIFICATIONS / EQUIVALENT	MANUF.
	C.....1	59.26.1479	4.7uF	-20%, 10V, Sal	Ph,Ri
	DL..2.0	50.04.2130	LY 3160-GK	Yellow	Sie
	DL..2.1		not used		
	DL..2.2	50.04.2130	LY 3160-GK	Yellow	Sie
	DL..2.3	50.04.2130	LY 3160-GK	Yellow	Sie
	DL..2.4	50.04.2131	LG 3160-GK	Green	Sie
	DL..2.5	50.04.2129	LS 3160-HL	Red	Sie
	DL..2.6	50.04.2130	LY 3160-GK	Yellow	Sie
	DL..2.7	50.04.2131	LG 3160-GK	Green	Sie
	DL..3.0	50.04.2130	LY 3160-GK	Yellow	Sie
	DL..3.1		not used		
	DL..3.2	50.04.2130	LY 3160-GK	Yellow	Sie
	DL..3.3	50.04.2130	LY 3160-GK	Yellow	Sie
	DL..3.4	50.04.2130	LY 3160-GK	Yellow	Sie
	DL..3.5	50.04.2130	LY 3160-GK	Yellow	Sie
	DL..3.6	50.04.2130	LY 3160-GK	Yellow	Sie
	DL..3.7	50.04.2130	LY 3160-GK	Yellow	Sie
	DLZ...1	73.01.0124	MAN 6660	7-Segments, Red, Brightness "G"	GI
	DLZ...2	73.01.0124	MAN 6660	7-Segments, Red, Brightness "G"	GI
	DLZ...3	73.01.0124	MAN 6660	7-Segments, Red, Brightness "G"	GI
	DLZ...4	73.01.0124	MAN 6660	7-Segments, Red, Brightness "G"	GI
	DLZ...5	73.01.0124	MAN 6660	7-Segments, Red, Brightness "G"	GI
	DLZ...6	73.01.0124	MAN 6660	7-Segments, Red, Brightness "G"	GI
	DLZ...7	73.01.0124	MAN 6660	7-Segments, Red, Brightness "G"	GI
	DLZ...8	73.01.0124	MAN 6660	7-Segments, Red, Brightness "G"	GI
	DLZ...9	73.01.0124	MAN 6660	7-Segments, Red, Brightness "G"	GI
	DLZ..10	73.01.0124	MAN 6660	7-Segments, Red, Brightness "G"	GI
	S...4.0	55.03.0261	TTL-switch	1 * OC, Rafi Nr. 3.13001.110	
	S...4.1	55.03.0261	TTL-switch	1 * OC, Rafi Nr. 3.13001.110	
	P.....1	54.14.2004	40 cont.	see note 1	

Note 1 - Connector: Yamaichi Nr. FAP-40-08-40SS
Burndy Nr. BPH 9 B 40 B00 GS

Sal=Solid Aluminium

MANUFACTURERS: GI=General Instruments, Ph=Philips, Ri=Rifa, Sie=Siemens.

ORIG 85/04/23

S T U D E R (=P) 85/04/23 SU TIMER DISPLAY BOARD 1.328.271.00

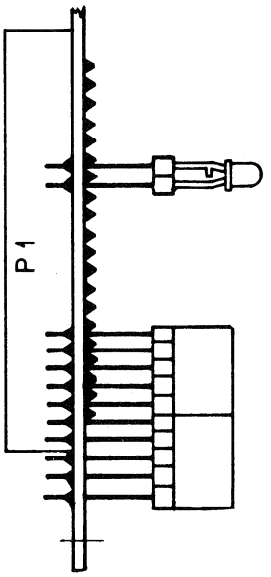

REMOTE TIMER/LAP MODE DISPLAY 1.328.270.00
–TIMER DRIVER PCB 1.328.272.24

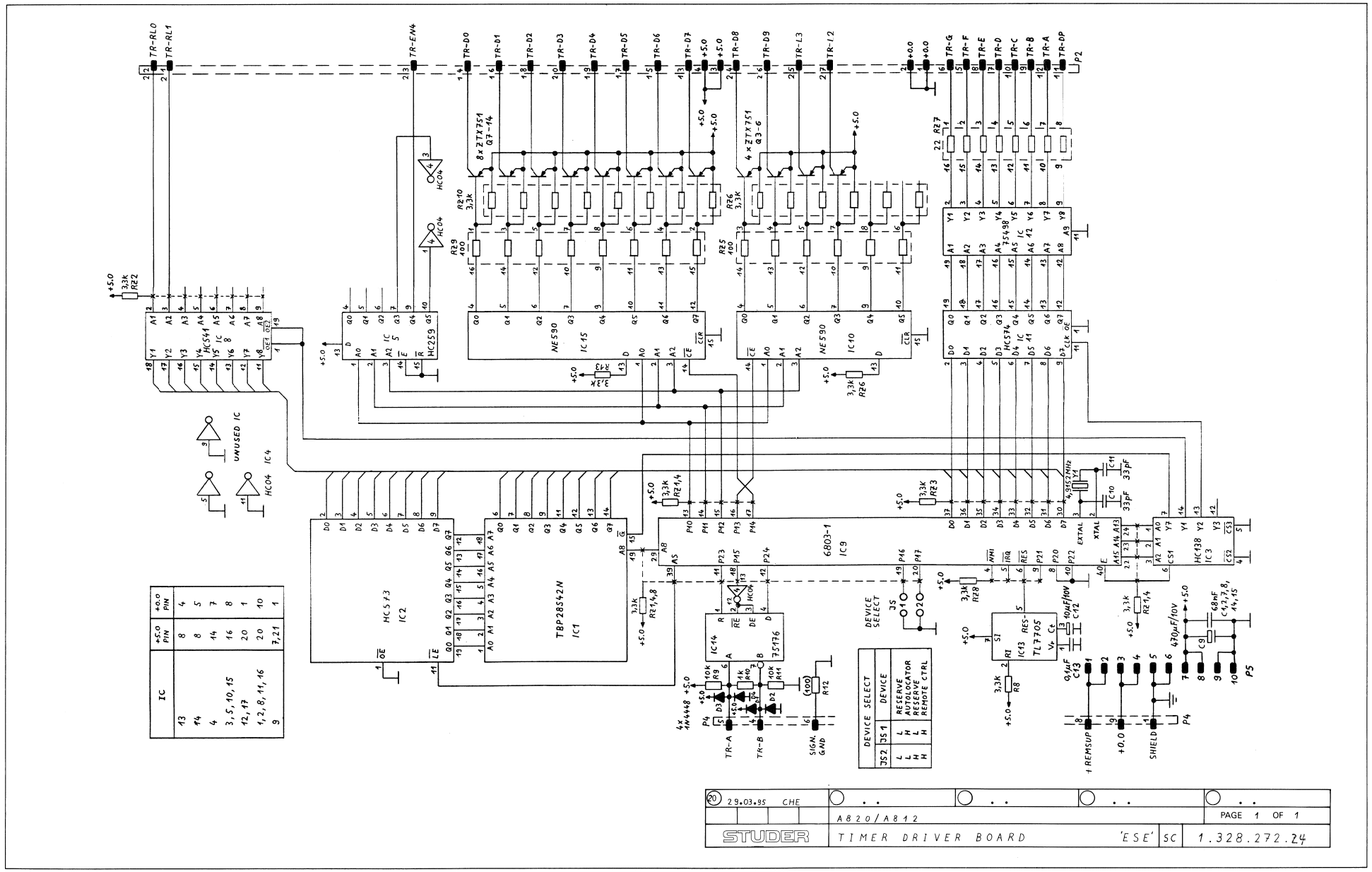

REMOTE TIMER/LAP MODE DISPLAY 1.328.270.00
–TIMER DRIVER PCB 1.328.272.24

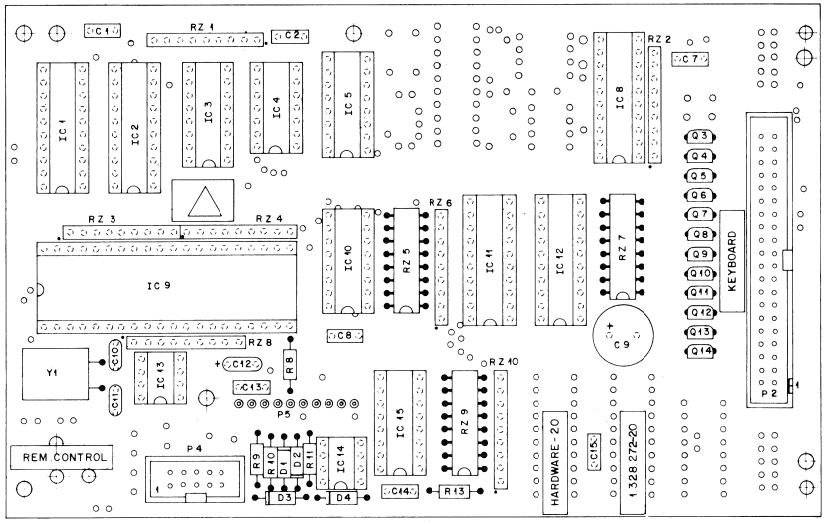

IND.	POS.NO.	PART NO.	VALUE	SPECIFICATIONS / EQUIVALENT	MANUF.
	C.....1	59.06.0683	68 nF	10%, 63V, PETP	
	C.....2	59.06.0683	68 nF	10%, 63V, PETP	
	C.....7	59.06.0683	68 nF	10%, 63V, PETP	
	C.....8	59.06.0683	68 nF	10%, 63V, PETP	
	C.....9	59.22.3471	470 nF	-20%+ 10V, El	
	C.....10	59.34.2330	33 pF	5%, N150, Cer	
	C.....11	59.34.2330	33 pF	5%, N150, Cer	
	C.....12	59.26.1100	10 uF	20%, 10V, Sal	
	C.....13	59.06.0104	100 nF	10%, 63V, PETP	
	C.....14	59.06.0683	68 nF	10%, 63V, PETP	
	C.....15	59.06.0683	68 nF	10%, 63V, PETP	
	D.....1	50.04.0125	LN 4448		Fc,ITT,Ph,Ses,Tf
	D.....2	50.04.0125	LN 4448		Fc,ITT,Ph,Ses,Tf
	D.....3	50.04.0125	LN 4448		Fc,ITT,Ph,Ses,Tf
	D.....4	50.04.0125	LN 4448		Fc,ITT,Ph,Ses,Tf
	IC....1	1.328.999.20		Software 13/85	St
	IC....2	50.17.1573	74 HC 573	.. 74 HC 573 .	Mot,NS,Ph,RCA,SGS,TI,To
	IC....3	50.17.1138	74 HC 138	.. 74 HC 138 .	Mot,NS,Ph,RCA,SGS,TI,To
	IC....4	50.17.1004	74 HC 04	.. 74 HC 04 .	Mot,NS,Ph,RCA,TI,To
	IC....5	50.17.1259	74 HC 259	.. 74 HC 259 .	Mot,NS,Ph,RCA,SGS,TI,To
	IC....8	50.17.1541	74 HC 541	.. 74 HC 541 .	Mot,NS,Ph,RCA,SGS,TI,To
	IC....9	50.16.0107	MC 6803P-1	HD 6803P-1	Hi,Mot
	IC....10	50.15.0102	NE 590 N		Sig
	IC....11	50.17.1574	74 HC 574	.. 74 HC 574 .	Mot,NS,Ph,RCA,SGS,TI,To
	IC....12	50.15.0113	SN 75498 N		TI
	IC....13	50.11.0122	TL7705ACP		TI
	IC....14	50.15.0115	SN 75176AP	DS 3695 N	NS,TI
	IC....15	50.15.0102	NE 590 N		Sig
	P.....2			see note 3	
	P.....4			see note 2	
	P.....5			see note 4	
	Q.....3	50.03.0352	ZTX 751 S		Fe
	Q.....4	50.03.0352	ZTX 751 S		Fe

	Q.....5	50.03.0352	ZTX 751 S		Fe
	Q.....6	50.03.0352	ZTX 751 S		Fe
	Q.....7	50.03.0352	ZTX 751 S		Fe
	Q.....8	50.03.0352	ZTX 751 S		Fe
	Q.....9	50.03.0352	ZTX 751 S		Fe
	Q.....10	50.03.0352	ZTX 751 S		Fe
	Q.....11	50.03.0352	ZTX 751 S		Fe
	Q.....12	50.03.0352	ZTX 751 S		Fe
	Q.....13	50.03.0352	ZTX 751 S		Fe
	Q.....14	50.03.0352	ZTX 751 S		Fe
	R.....8	57.11.4332	3.3 kOhm	2%	
	R.....9	57.11.4103	10 kOhm	2%	
	R.....10	57.11.4102	1 kOhm	2%	
	R.....11	57.11.4103	10 kOhm	2%	
	R.....12		not used		
	R.....13	57.11.4332	3.3 kOhm	2%	
	RZ....1	57.88.4332		Network, 8 * 3.3 kOhm, 2%, single line	
	RZ....2	57.88.4332		Network, 8 * 3.3 kOhm, 2%, single line	
	RZ....3	57.88.4332		Network, 8 * 3.3 kOhm, 2%, single line	
	RZ....4	57.88.4332		Network, 8 * 3.3 kOhm, 2%, single line	
	RZ....5	57.88.3101		Network, 8 * 100 Ohm, 5%, DIL 16	
	RZ....6	57.88.4332		Network, 8 * 3.3 kOhm, 2%, single line	
	RZ....7	57.88.3220		Network, 8 * 22 Ohm, 5%, DIL 16	
	RZ....8	57.88.4332		Network, 8 * 3.3 kOhm, 2%, single line	
	RZ....9	57.88.3101		Network, 8 * 100 Ohm, 2%, DIL 16	
	RZ....10	57.88.4332		Network, 8 * 3.3 kOhm, 5%, single line	
	Y.....1	89.01.0560	4.9152 MH	z +-100 ppM, Nymph Nr. TD 18/NMP 049	

Note 2 – Connector: 10 Contacts
Studer Nr. 54.14.2001
Yamaichi Nr. FAP-10-08//4
Burndy Nr. BPM 7 B 10 B00 GS

Note 3 – Connector: 40 Contacts
Studer Nr. 54.14.2004
Yamaichi Nr. FAP-40-08//4
Burndy Nr. BPM 9 B 40 B00 GS

Note 4 – Connector: 10 Pieces
Studer Nr. 1.010.018.54

Cer=Ceramic, El=Electrolytic, PETP=Polyester film, Sal=Solid aluminium.

MANUFACTURERS: Fc=Fairchild, Fe=Ferranti, Hi=Hitachi, Is=Intersil,
ITT=Intermetall, Mot=Motorola, NS=National Semiconductors
Ph=Philips, RCA=RCA Corporation, Ses=Sescosem, SGS=SGS/Ates,
Sig=Signetics, St=Studer, Tf=Telefunken,
TI=Texas Instruments, To=Toshiba.

ORIG 85/04/23

REMOTE CONTROL CABINET (SERIAL) 1.328.210
REMOTE CONTROL MODULE (SERIAL) 1.328.220

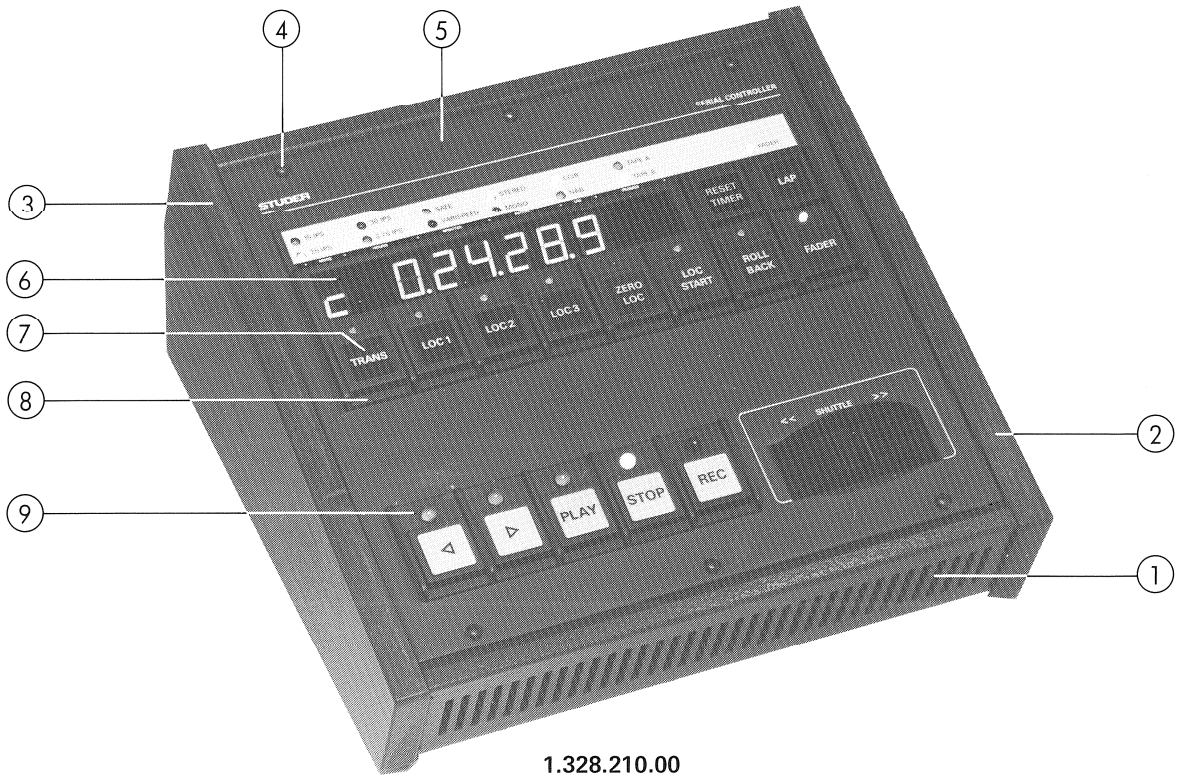

1.328.210.00

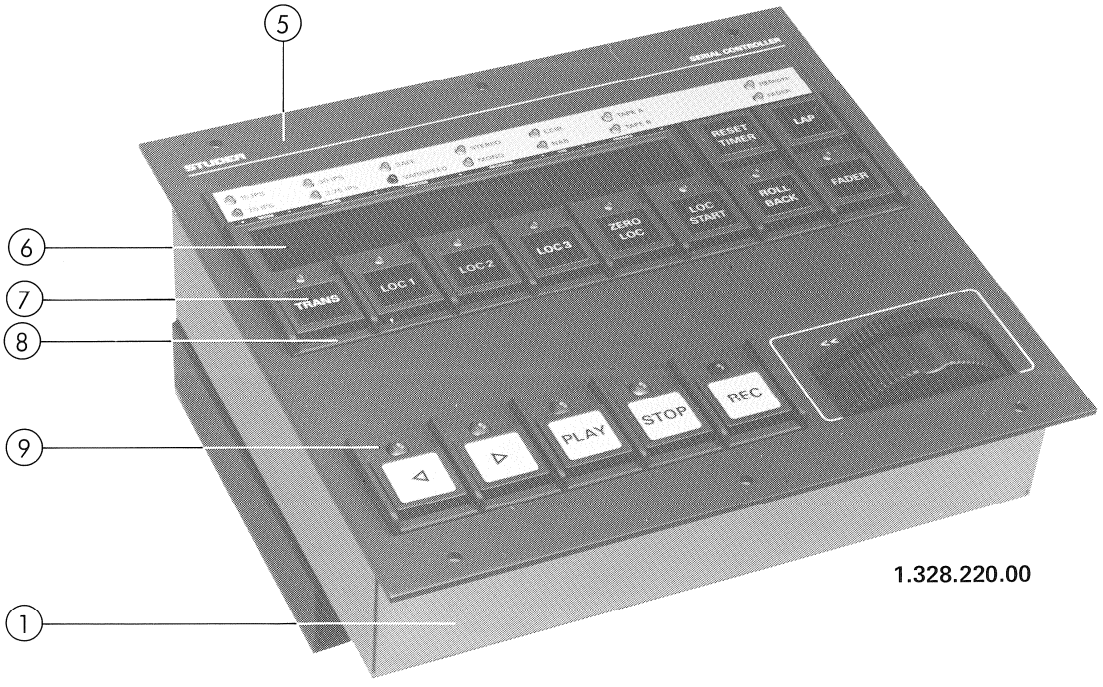

1.328.220.00

REMOTE CONTROL CABINET (SERIAL) 1.328.210
REMOTE CONTROL MODULE (SERIAL) 1.328.220

Pos.	QTY.	Order Number	Part Name	Specification
		1.328.210.00 1.328.220.00	Serial Remote Control:	Cabinet Module
	15		Self-adhesive Labels: see section 10.	
	1	1.328.213.00	Stabilizer Board	
	1	1.328.211.23	Remote Control Driver Board	
	1	1.328.212.00	Remote Control Display Board	
	1 1	1.328.215.81 1.328.214.00	Shuttle Assembly compl. Shuttle Board	
1 1	1 4 1 1	1.820.922.00 31.02.0211 1.328.220.01 1.328.220.02	Housing compl. (incl. Pos. 2/3 and feet) Foot Housing Part Bottom cover	
2	1 2 2	1.328.210.02 21.53.0454 24.16.1040	Side panel Chees head allen screw Fin washer	Right M4 x 6
3	1 2 2	1.328.210.01 21.53.0454 24.16.1040	Side panel Chees head allen screw Fin washer	Left M4 x 6
4	6	1.010.025.21	Oval head allen screw	M3 x 6
5 5	1 1	1.328.210.03 1.328.220.11	Front cover:	Cabinet Module
6	1	1.820.232.02	Filter screen red	
7	15 15	1.011.210.01 1.010.202.37	Push-button Pressure spring	
8	1 1 1	1.820.232.01 1.810.300.05 1.810.232.03	Push-button housing Damping strip for:	 2 buttons 8 buttons
9	1 1	1.810.300.03 1.810.300.06	Push-button housing Damping strip for 5 buttons	

REMOTE CONTROL CABINET (SERIAL) 1.328.210
REMOTE CONTROL MODULE (SERIAL) 1.328.220
–STABILIZER PCB 1.328.213.00

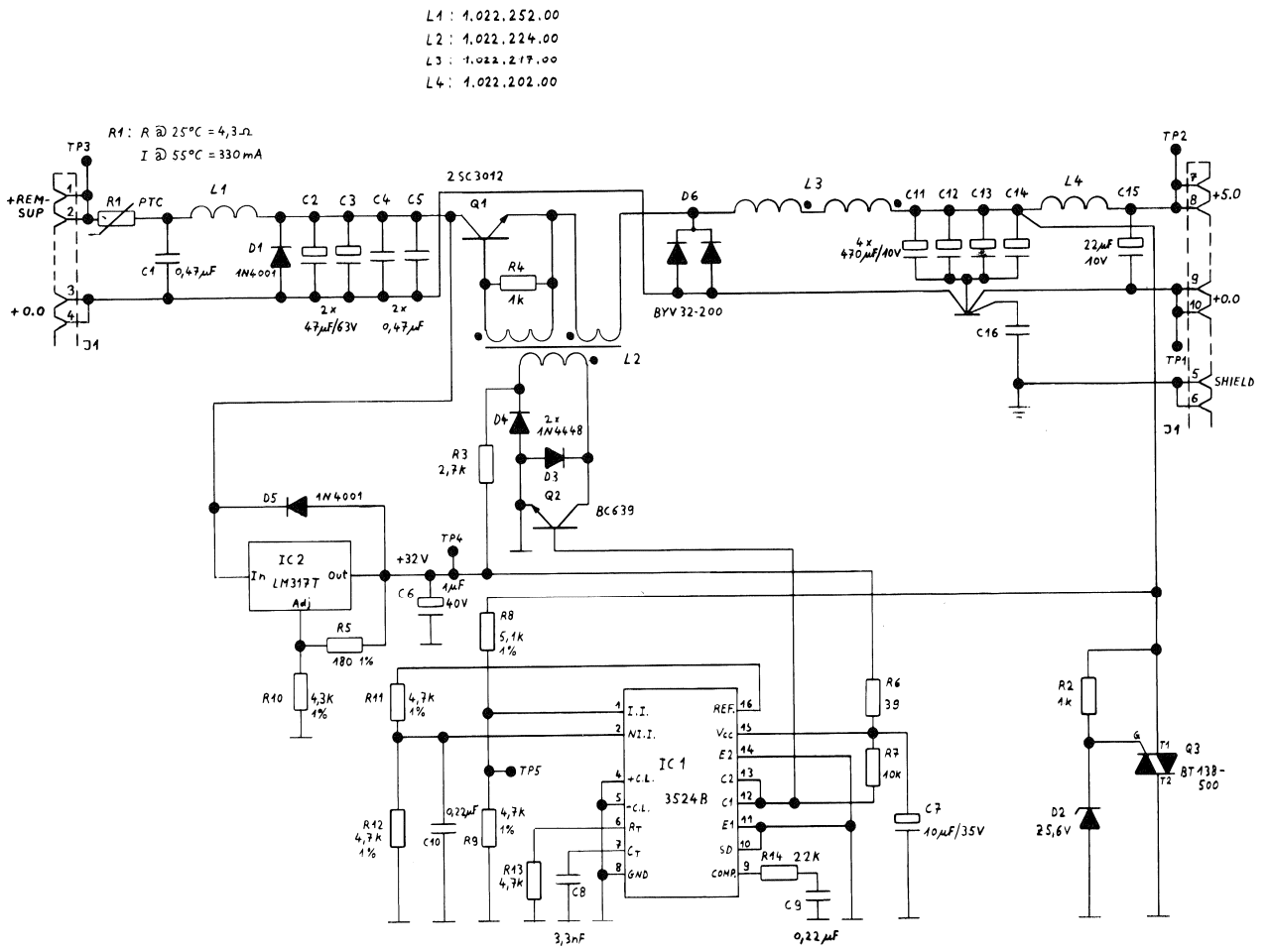

0 05.02.85 CHE				
	A820/A812			PAGE 1 OF 1
STUDER	STABILIZER BOARD		SC	1.328.213.00

REMOTE CONTROL CABINET (SERIAL) 1.328.210
REMOTE CONTROL MODULE (SERIAL) 1.328.220
–STABILIZER PCB 1.328.213.00

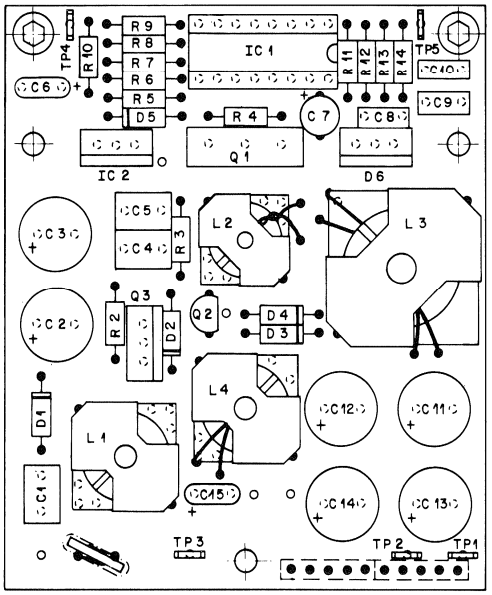

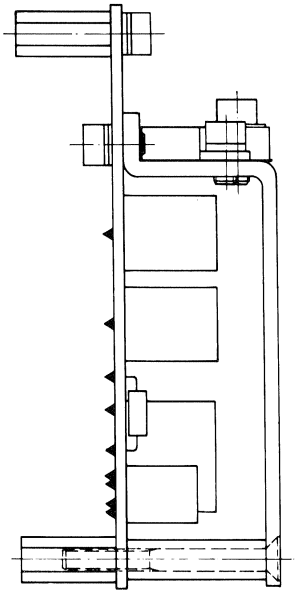

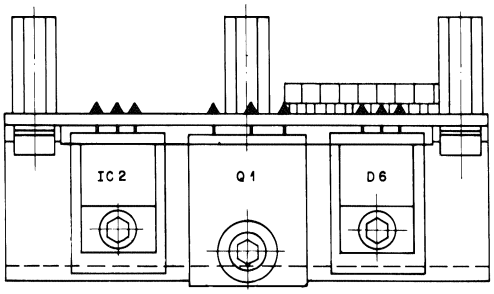

IND.	POS.NO.	PART NO.	VALUE	SPECIFICATIONS / EQUIVALENT	MANUF.
	C....01	59.06.0474	0.47 uF	10%, PETP	
	C....02	59.22.8470	47 uF	20%, 63V , EL	
	C....03	59.22.8470	47 uF	20%, 63V , EL	
	C....04	59.06.0474	0.47 uF	10%, PETP	
	C....05	59.06.0474	0.47 uF	10%, PETP	
	C....06	59.26.9109	1 uF	20%, 40V , SAL	
	C....07	59.22.6100	10 uF	-20%, 35V , EL	
	C....08	59.06.0332	3300 pF	10%, PETP	
	C....09	59.06.0224	0.22 uF	10%, PETP	
	C....10	59.06.0224	0.22 uF	10%, PETP	
	C....11	59.22.3471	470 uF	-20%, 10V , EL	
	C....12	59.22.3471	470 uF	-20%, 10V , EL	
	C....13	59.22.3471	470 uF	-20%, 10V , EL	
	C....14	59.22.3471	470 uF	-20%, 10V , EL	
	C....15	59.26.1220	22 uF	20%, 10V , SAL	
	D....01	50.04.0122	1N 4001		Mot
	D....02	50.04.1108	5.6 V	BZX83 C 5V6, BZX55 C 5V6, ZPD 5.6	Ses,ITT
	D....03	50.04.0125	1N 4448		Fc,ITT,Ph,Ses
	D....04	50.04.0125	1N 4448		Fc,ITT,Ph,Ses
	D....05	50.04.0122	1N 4001		Mot
	D....06	50.04.0517	BYV32-200		Mot,Ph
	IC...01	50.05.0279	SG 3524BN		SG
	IC...02	50.10.0104	LM 317T	LM 317 SP	Tho,Mot,NS,TI
	J....01			see note 1	
	L....01	1.022.292.00	0.32 mH	Filter Coil	St
	L....02	1.022.224.00		Power Supply Transformer	St
	L....03	1.022.217.00	46 uH	HF-Coil, 5A	St
	L....04	1.022.202.00	16.9 mH	Filter Coil	St
	Q....01	50.03.0517	2 SC 3012	NPN	NEC
	Q....02	50.03.0551	BC 639	NPN	Mot,Ph
	Q....03	50.99.0106	T 2800	400V, 8A,Triac	Ph

IND.	POS.NO.	PART NO.	VALUE	SPECIFICATIONS / EQUIVALENT	MANUF.
	R....01	57.92.1331	PTC	see note 2	Ph
	R....02	57.11.4102	1 kOhm	2%	
	R....03	57.11.4272	2.7 kOhm	2%	
	R....04	57.11.4102	1 kOhm	2%	
	R....05	57.11.3181	180 Ohm	1%	
	R....06	57.11.4390	39 Ohm	2%	
	R....07	57.11.4103	10 kOhm	2%	
	R....08	57.11.3512	5.1 kOhm	1%	
	R....09	57.11.3472	4.7 kOhm	1%	
	R....10	57.11.3432	4.3 kOhm	1%	
	R....11	57.11.3472	4.7 kOhm	1%	
	R....12	57.11.3472	4.7 kOhm	1%	
	R....13	57.11.4472	4.7 kOhm	2%	
	R....14	57.11.4223	22 kOhm	2%	
	P....01	54.02.0320	Test Point		
	P....02	54.02.0320	Test Point		
	P....03	54.02.0320	Test Point		
	P....04	54.02.0320	Test Point		
	P....05	54.02.0320	Test Point		

EL=Electrolytic, SAL=Solid Aluminium, PETP=Polyester

MANUFACTURERS: Fc=Fairchild, ITT=Intermetall, Mot=Motorola,
NEC=Nippon Electric Corp., NS=National Semiconductors,
Ph=Philips, Ses=Sescosem, SG=Silicon General, St=Studer
Tho=Thomson, TI=Texas Instruments

note 1 - Connector: 2 pieces Studer Nr.53030202

note 2 - PTC Thermistor: R @ 25 degree Celsius = 4.7 Ohm
I @ 55 degree Celsius = 330 mA
Philips Nr.2322 663 13311

ORIG 85/02/05

REMOTE CONTROL CABINET (SERIAL) 1.328.210
REMOTE CONTROL MODULE (SERIAL) 1.328.220
–REMOTE CONTROL DRIVER PCB 1.328.211.23

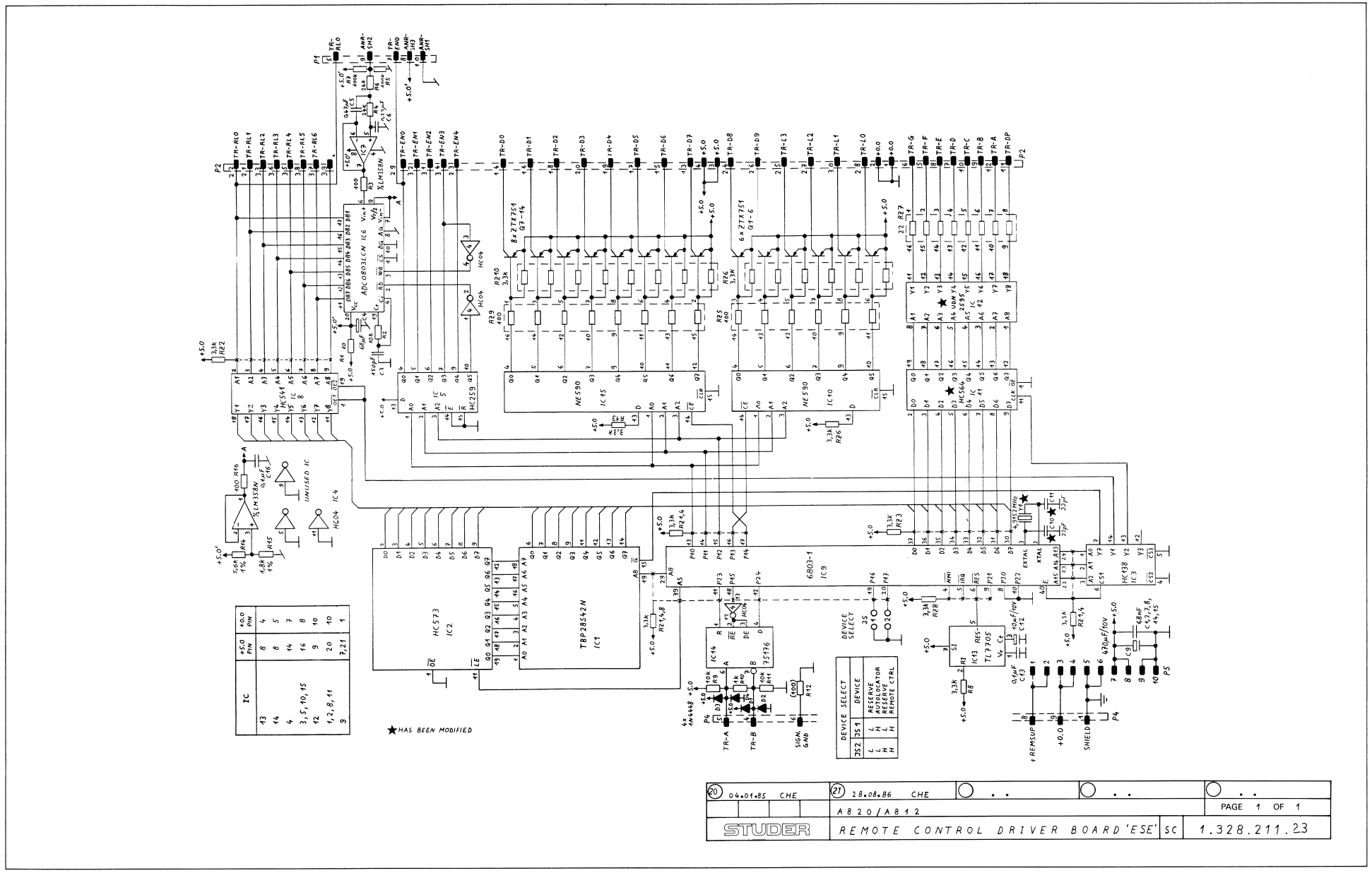

REMOTE CONTROL CABINET (SERIAL) 1.328.210.00
REMOTE CONTROL MODULE (SERIAL) 1.328.220.00
–REMOTE CONTROL DRIVER PCB 1.328.211.23

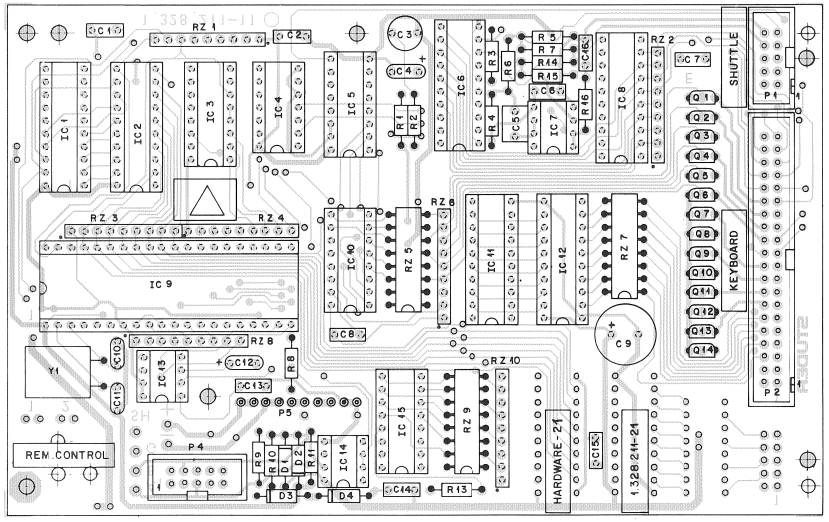

IND.	POS.NO.	PART NO.	VALUE	SPECIFICATIONS / EQUIVALENT	MANUF.
(20)	C.....1	59.06.0683	68 nF	10%, ±3V, PETP	
(20)	C.....2	59.06.0683	68 nF	10%, ±3V, PETP	
(20)	C.....3	59.05.2151	150 pF	2.5%, 630V, PP	
(20)	C.....4	59.26.0680	68 uF	20%, 6.3V, Sal	
(20)	C.....5	59.06.0474	470 nF	10%, ±3V, PETP	
(20)	C.....6	59.06.0224	220 nF	10%, ±3V, PETP	
(20)	C.....7	59.06.0683	68 nF	10%, ±3V, PETP	
(20)	C.....8	59.06.0683	68 nF	10%, ±3V, PETP	
(20)	C.....9	59.22.3471	470 uF	-20%, -10V, El	
(20)	C.....10	59.34.2220	22 pF	5%, N150, Cer	
(21)	C.....10	59.34.2330	33 pF	5%, N150, Cer	
(20)	C.....11	59.34.2220	22 pF	5%, N150, Cer	
(21)	C.....11	59.34.2330	33 pF	5%, N150, Cer	
(20)	C.....12	59.26.1100	10 uF	20%, 10V, Sal	
(20)	C.....13	59.06.0104	100 nF	10%, ±3V, PETP	
(20)	C.....14	59.06.0683	68 nF	10%, ±3V, PETP	
(20)	C.....15	59.06.0683	68 nF	10%, ±3V, PETP	
(20)	C.....16	59.06.0104	100 nF	10%, ±3V, PETP	
(20)	D.....1	50.04.0125	1N 4448		Fc,ITT,Ph,Ses,Tf
(20)	D.....2	50.04.0125	1N 4448		Fc,ITT,Ph,Ses,Tf
(20)	D.....3	50.04.0125	1N 4448		Fc,ITT,Ph,Ses,Tf
(20)	D.....4	50.04.0125	1N 4448		Fc,ITT,Ph,Ses,Tf
(00)	IC....1	50.14.0120	TBP28S42N		TI
(20)	IC....1	1.328.999.20		Software 13/85	St
(20)	IC....2	50.17.1573	74 HC 573	.. 74 MC 573 .	Mot,NS,Ph,RCA,SGS,TI,To
(20)	IC....3	50.17.1138	74 HC 138	.. 74 HC 138 .	Mot,NS,Ph,RCA,SGS,TI,To
(20)	IC....4	50.17.1004	74 HC 04	.. 74 HC 04 .	Mot,NS,Ph,RCA,TI,To
(20)	IC....5	50.17.1259	74 HC 259	.. 74 HC 259 .	Mot,NS,Ph,RCA,SGS,TI,To
(20)	IC....6	50.07.0029	ADC0801LCN		Is,NS
(20)	IC....7	50.05.0286	LM 358 N	LM 358 P	Mot,NS,TI
(20)	IC....8	50.17.1541	74 HC 541	.. 74 HC 541 .	Mot,NS,Ph,RCA,SGS,TI,To
(20)	IC....9	50.16.0107	MC 6803P-1	HD 6803P-1	Mi,Mot
(20)	IC....10	50.15.0102	NE 590 N		Sig
(20)	IC....11	50.17.1574	74 HC 574	.. 74 HC 574 .	Mot,NS,Ph,RCA,SGS,TI,To
(21)	IC....11	50.17.1564	74 HC 564	.. 74 HC 564 .	Mot,NS,Ph,RCA,TI

IND.	POS.NO.	PART NO.	VALUE	SPECIFICATIONS / EQUIVALENT	MANUF.
(20)	IC....12	50.15.0113	SN 75498 N		TI
(21)	IC....12	50.15.0118	UUN-2595A		Sp
(20)	IC....13	50.11.0122	TL7705ACP		TI
(20)	IC....14	50.15.0115	SN 75176AP	OS 3691 N	NS,TI
(20)	IC....15	50.15.0102	NE 590 N		Sig
(20)	IC....16		not used		
(20)	IC....17		not used		
(20)	P.....1			see note 2	
(20)	P.....2			see note 3	
(20)	P.....3		not used		
(20)	P.....4			see note 2	
(20)	P.....5			see note 4	
(20)	Q.....1	50.03.0352	ZTX 751 S		Fe
(20)	Q.....2	50.03.0352	ZTX 751 S		Fe
(20)	Q.....3	50.03.0352	ZTX 751 S		Fe
(20)	Q.....4	50.03.0352	ZTX 751 S		Fe
(20)	Q.....5	50.03.0352	ZTX 751 S		Fe
(20)	Q.....6	50.03.0352	ZTX 751 S		Fe
(20)	Q.....7	50.03.0352	ZTX 751 S		Fe
(20)	Q.....8	50.03.0352	ZTX 751 S		Fe
(20)	Q.....9	50.03.0352	ZTX 751 S		Fe
(20)	Q.....10	50.03.0352	ZTX 751 S		Fe
(20)	Q.....11	50.03.0352	ZTX 751 S		Fe
(20)	Q.....12	50.03.0352	ZTX 751 S		Fe
(20)	Q.....13	50.03.0352	ZTX 751 S		Fe
(20)	Q.....14	50.03.0352	ZTX 751 S		Fe
(20)	R.....1	57.11.4100	10 Ohm	2%	
(20)	R.....2	57.11.4103	10 kOhm	2%	
(20)	R.....3	57.11.4101	100 Ohm	2%	
(20)	R.....4	57.11.3243	24 kOhm	1%	
(20)	R.....5	57.11.4104	100 kOhm	2%	
(20)	R.....6	57.11.3243	24 kOhm	1%	
(20)	R.....7	57.11.4104	100 kOhm	2%	
(20)	R.....8	57.11.4332	3.3 kOhm	2%	

IND.	POS.NO.	PART NO.	VALUE	SPECIFICATIONS / EQUIVALENT	MANUF.
(20)	R.....9	57.11.4103	10 kOhm	2%	
(20)	R.....10	57.11.4102	1 kOhm	2%	
(20)	R.....11	57.11.4103	10 kOhm	2%	
(20)	R.....12	not used			
(20)	R.....13	57.11.4332	3.3 kOhm	2%	
(20)	R.....14	57.11.3562	5.6 kOhm	1%	
(20)	R.....15	57.11.3182	1.8 kOhm	1%	
(20)	R.....16	57.11.4101	100 Ohm	2%	
(20)	RZ.....1	57.88.4332		Network, 8 * 3.3 kOhm, 5%, single line	
(20)	RZ.....2	57.88.4332		Network, 8 * 3.3 kOhm, 5%, single line	
(20)	RZ.....3	57.88.4332		Network, 8 * 3.3 kOhm, 5%, single line	
(20)	RZ.....4	57.88.4332		Network, 8 * 3.3 kOhm, 5%, single line	
(20)	RZ.....5	57.88.3101		Network, 8 * 100 Ohm, 2%, DIL 16	
(20)	RZ.....6	57.88.4332		Network, 8 * 3.3 kOhm, 5%, single line	
(20)	RZ.....7	57.88.3220		Network, 8 * 22 Ohm, 2%, DIL 16	
(20)	RZ.....8	57.88.4332		Network, 8 * 3.3 kOhm, 5%, single line	
(20)	RZ.....9	57.88.3101		Network, 8 * 100 Ohm, 2%, DIL 16	
(20)	RZ.....10	57.88.4332		Network, 8 * 3.3 kOhm, 5%, single line	
(20)	RZ.....11	not used			
(20)	Y.....1	89.01.0553	4.9152 MHz	+-100 ppm, Nymph Nr. TD 18/NMP 049	
(21)	Y.....1	89.01.0560	HC-49/V	4.9152 MHz, +-20 ppm Quarz AG,ITT,Saronix	

(20) 85.02.01 PCB lay-out -11

(21) 86.12.01 IC12-SN75498N delivered for spare purpose only, new devices IC11 and IC12.
Y1, C10, C11 improved accuracy of quartz frequency.

Note 2 - Connector, 10 Contacts
Studer Nr. 54.14.2001
Yamaichi Nr. FAP-10-08/4
Burndy Nr. BPH 7 8 10 800 GS

Note 3 - Connector, 40 Contacts
Studer Nr. 54.14.2004
Yamaichi Nr. FAP-40-08/4
Burndy Nr. BPH 9 8 40 800 GS

Note 4 - Connector: 10 Pieces
Studer Nr. 1.010.018.54

Cer=Ceramic, El=Electrolytic, PETP=Polyester Film, PP=Polypropylen, Sal=Solid Aluminium.

MANUFACTURERS: Fc=Fairchild, Fe=Ferranti, Hi=Hitachi, Is=Intersil, ITT=Intermetall, Mot=Motorola, NS=National Semiconductors Ph=Philips, RCA=RCA Corporation, Ses=Sescosem, SGS=SGS/Ates, Sig=Signetics, Sp=Sprague, St=Studer, TF=Telefunken, TI=Texas Instruments, To=Toshiba.

ORIG 85/02/01 (20) 85/02/01 (21) 86/12/01

REMOTE CONTROL CABINET (SERIAL) 1.328.210.00
REMOTE CONTROL MODULE (SERIAL) 1.328.220.00
–REMOTE CONTROL DISPLAY PCB 1.328.212.00

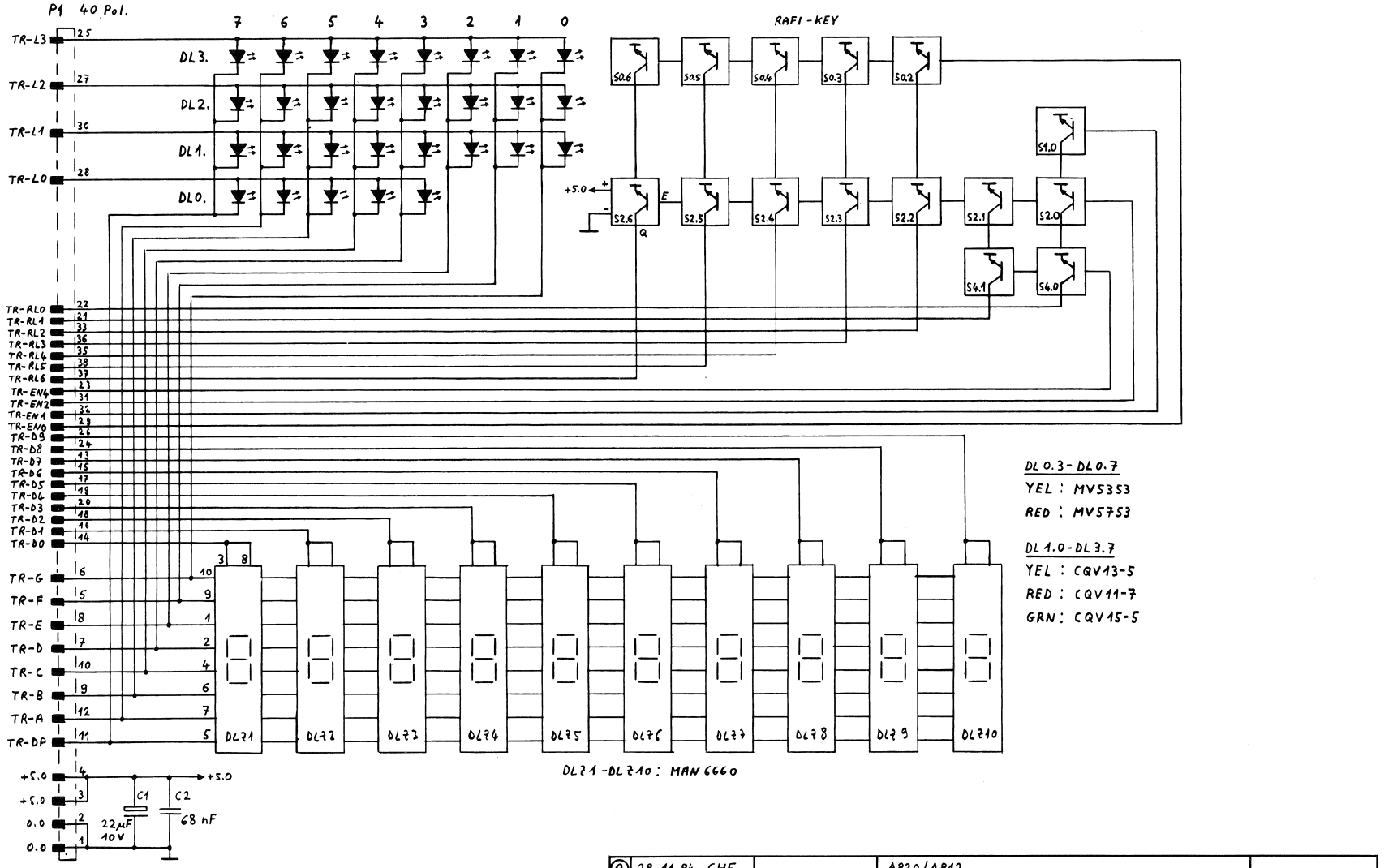

0 28.11.84 CHE		A820/A812		
STUDER	REMOTE CONTROL DISPLAY BOARD	SC	1.328.212.00	PAGE 1 OF 1

REMOTE CONTROL CABINET (SERIAL) 1.328.210.00
REMOTE CONTROL MODULE (SERIAL) 1.328.220.00
–REMOTE CONTROL DISPLAY PCB 1.328.212.00

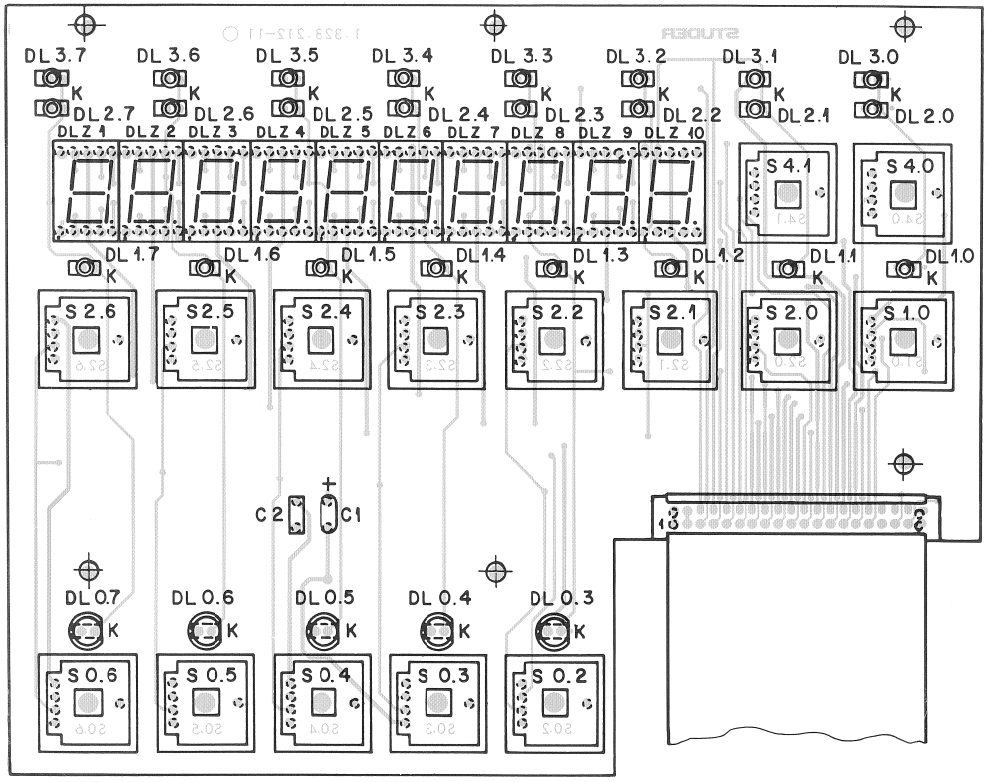

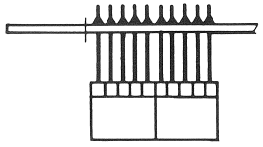

DLZ 1 – 10

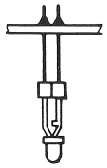

DL 1.0 - 1.7
DL 2.0 - 2.7
DL 3.0 - 3.7
DL 0.3 - 0.7

IND.	POS.NO.	PART NO.	VALUE	SPECIFICATIONS / EQUIVALENT	MANUF.
	C....01	59.76.1220	22 uF	-20%, 10V , SAL	
	C....02	59.06.0683	68 nF	10%, PETP	
	DL..0.3	50.04.2111	MV 5753	LED, Red, HLMP 3301	Sie
	DL..0.4	50.04.2112	MV 5353	LED, Yellow, HLMP 3401	Sie
	DL..0.5	50.04.2112	MV 5353	LED, Yellow, HLMP 3401	Sie
	DL..0.6	50.04.2112	MV 5353	LED, Yellow, HLMP 3401	Sie
	DL..0.7	50.04.2112	MV 5353	LED, Yellow, HLMP 3401	Sie
	DL..1.0	50.04.2130	CQV 13-7	LED, Yellow	Sie
	DL..1.1	50.04.2130	CQV 13-7	LED, Yellow	Sie
	DL..1.2	50.04.2130	CQV 13-7	LED, Yellow	Sie
	DL..1.3	50.04.2130	CQV 13-7	LED, Yellow	Sie
	DL..1.4	50.04.2130	CQV 13-7	LED, Yellow	Sie
	DL..1.5	50.04.2130	CQV 13-7	LED, Yellow	Sie
	DL..1.6	50.04.2130	CQV 13-7	LED, Yellow	Sie
	DL..1.7	50.04.2130	CQV 13-7	LED, Yellow	Sie
	DL..2.0	50.04.2130	CQV 13-7	LED, Yellow	Sie
	DL..2.1		not used		
	DL..2.2	50.04.2130	CQV 13-7	LED, Yellow	Sie
	DL..2.3	50.04.2130	CQV 13-7	LED, Yellow	Sie
	DL..2.4	50.04.2131	CQV 15-5	LED, Green, CQV 15-6	Sie
	DL..2.5	50.04.2129	CQV 11-7	LED, Red	Sie
	DL..2.6	50.04.2130	CQV 13-7	LED, Yellow	Sie
	DL..2.7	50.04.2131	CQV 15-5	LED, Green, CQV 15-6	Sie
	DL..3.0	50.04.2130	CQV 13-7	LED, Yellow	Sie
	DL..3.1		not used		
	DL..3.2	50.04.2130	CQV 13-7	LED, Yellow	Sie
	DL..3.3	50.04.2130	CQV 13-7	LED, Yellow	Sie
	DL..3.4	50.04.2130	CQV 13-7	LED, Yellow	Sie
	DL..3.5	50.04.2130	CQV 13-7	LED, Yellow	Sie
	DL..3.6	50.04.2130	CQV 13-7	LED, Yellow	Sie
	DL..3.7	50.04.2130	CQV 13-7	LED, Yellow	Sie
	DLZ..01	73.01.0124	MAN 6660	7-Segments, Red, Brightness "G"	GI
	DLZ..02	73.01.0124	MAN 6660	7-Segments, Red, Brightness "G"	GI
	DLZ..03	73.01.0124	MAN 6660	7-Segments, Red, Brightness "G"	GI
	DLZ..04	73.01.0124	MAN 6660	7-Segments, Red, Brightness "G"	GI

IND.	POS.NO.	PART NO.	VALUE	SPECIFICATIONS / EQUIVALENT	MANUF.
	DLZ..05	73.01.0124	MAN 6660	7-Segments, Red, Brightness "G"	GI
	DLZ..06	73.01.0124	MAN 6660	7-Segments, Red, Brightness "G"	GI
	DLZ..07	73.01.0124	MAN 6660	7-Segments, Red, Brightness "G"	GI
	DLZ..08	73.01.0124	MAN 6660	7-Segments, Red, Brightness "G"	GI
	DLZ..09	73.01.0124	MAN 6660	7-Segments, Red, Brightness "G"	GI
	DLZ..10	73.01.0124	MAN 6660	7-Segments, Red, Brightness "G"	GI
	S...0.2	55.03.0261	TTL-switch	1 * OC, Rafi Nr. 3.13001.110	
	S...0.3	55.03.0261	TTL-switch	1 * OC, Rafi Nr. 3.13001.110	
	S...0.4	55.03.0261	TTL-switch	1 * OC, Rafi Nr. 3.13001.110	
	S...0.5	55.03.0261	TTL-switch	1 * OC, Rafi Nr. 3.13001.110	
	S...0.6	55.03.0261	TTL-switch	1 * OC, Rafi Nr. 3.13001.110	
	S...1.0	55.03.0261	TTL-switch	1 * OC, Rafi Nr. 3.13001.110	
	S...2.0	55.03.0261	TTL-switch	1 * OC, Rafi Nr. 3.13001.110	
	S...2.1	55.03.0261	TTL-switch	1 * OC, Rafi Nr. 3.13001.110	
	S...2.2	55.03.0261	TTL-switch	1 * OC, Rafi Nr. 3.13001.110	
	S...2.3	55.03.0261	TTL-switch	1 * OC, Rafi Nr. 3.13001.110	
	S...2.4	55.03.0261	TTL-switch	1 * OC, Rafi Nr. 3.13001.110	
	S...2.5	55.03.0261	TTL-switch	1 * OC, Rafi Nr. 3.13001.110	
	S...2.6	55.03.0261	TTL-switch	1 * OC, Rafi Nr. 3.13001.110	
	S...4.0	55.03.0261	TTL-switch	1 * OC, Rafi Nr. 3.13001.110	
	S...4.1	55.03.0261	TTL-switch	1 * OC, Rafi Nr. 3.13001.110	

SAL=Salid Aluminium, PETP=Polyester

MANUFACTURERS: GI=General Instruments, Sie=Siemens

ORIG 84/11/28 (01) 86/01/23

REMOTE CONTROL CABINET (SERIAL) 1.328.210.00
REMOTE CONTROL MODULE (SERIAL) 1.328.220.00
–SHUTTLE PCB 1.328.214.00

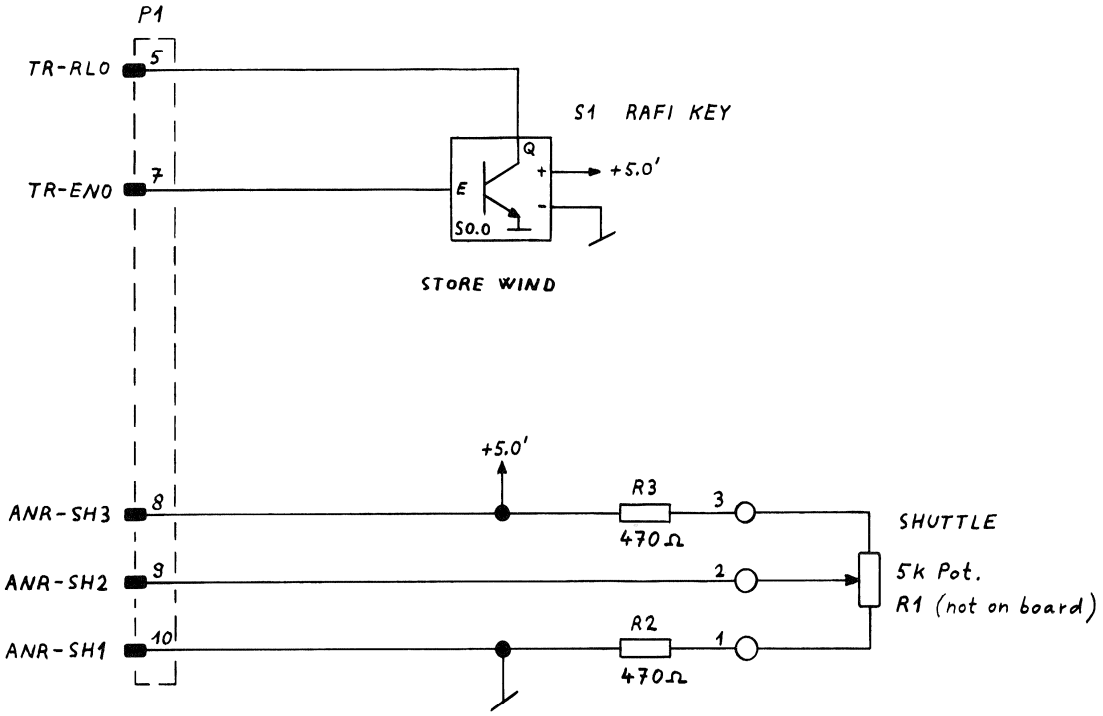

0 22.03.85 CHE		A820/A812		
STUDER	SHUTTLE BOARD	SC	1.328.214.00	PAGE 1 OF 1

REMOTE CONTROL CABINET (SERIAL) 1.328.210.00
REMOTE CONTROL MODULE (SERIAL) 1.328.220.00
–SHUTTLE PCB 1.328.214.00

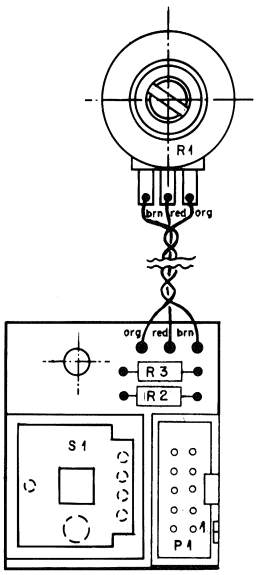

IND.	POS.NO.	PART NO.	VALUE	SPECIFICATIONS / EQUIVALENT	MANUF.
	R....01	54.14.2001		see note 1	
	R....02	57.11.4471	470 Ohm	2%	
	R....03	57.11.4471	470 Ohm	2%	
	S....01	55.03.0261	TTL-switch	1 * OC, Rafi Nr.3.13001.110	

Note 1 - Connector 10 contacts: Yamaichi Nr. FAP-10-0824
Burndy Nr. BPM 9 B 10 B00 GS

ORIG 85/03/22

S T U D E R (*P) 85/03/22 SU SHUTTLE BOARD 1.328.214.00 PAGE 1

SERIAL REMOTE SELECTOR 1.328.248.00

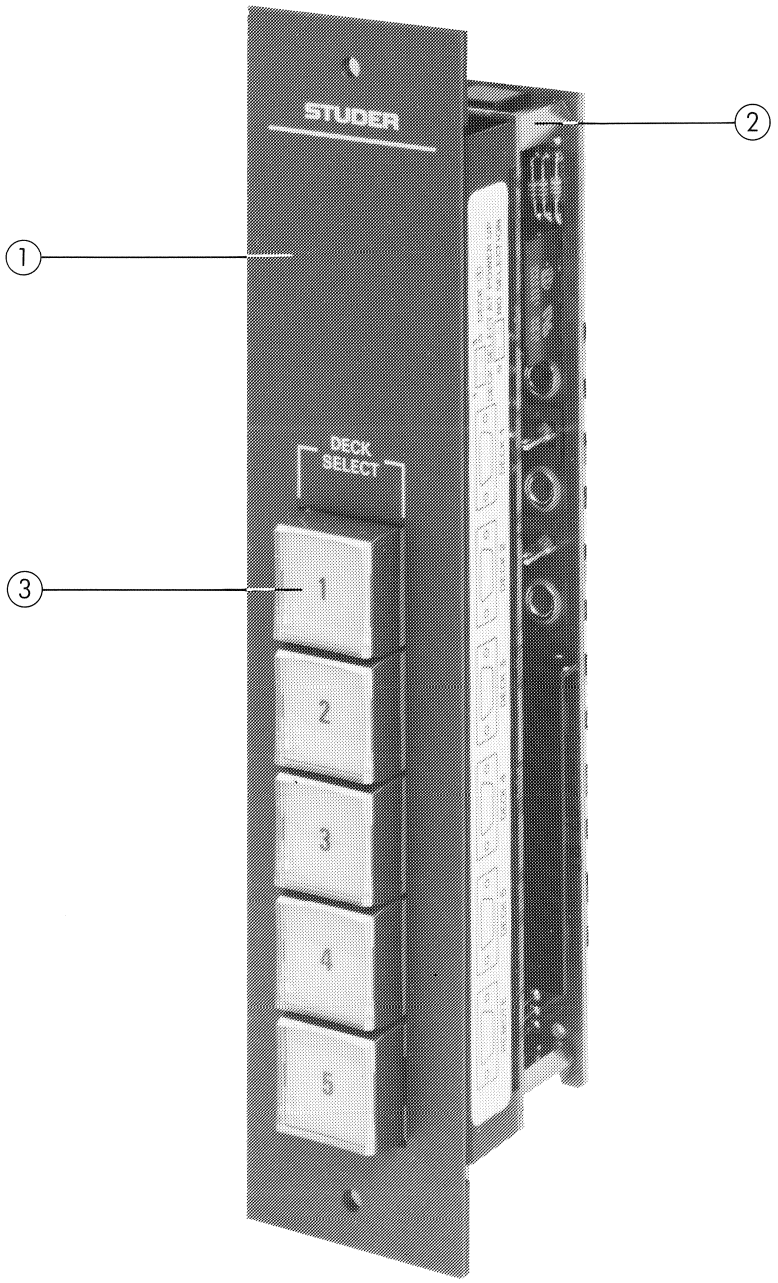

SERIAL REMOTE SELECTOR 1.328.248.00

Pos.	QTY.	Order Number	Part Name	Specification
		1.328.248.00	Serial remote selector	
	1	1.328.245.00	Serial remote selector keyboard	
	1	1.328.246.00	Serial remote selector keyboard	
1	1	1.328.248.01	Frontpanel	
2	4	1.010.110.27	Hex stud bolt	M3/M3 x 18
	8	23.01.1032	Washer	x
	4	21.53.0354	Cheer head allen screw	M3 x 6
	4	24.16.1030	Fin washer	
3	5	55.15.0231	Push button	
	5	55.15.0201	Push button cover concave	
	5	55.15.0221	Filter screen white	
	5	55.15.0228	Push button housing	
	1	1.328.358.04	Labels	

SERIAL REMOTE SELECTOR 1.328.248.00
–KEYBOARD 1.328.245.00

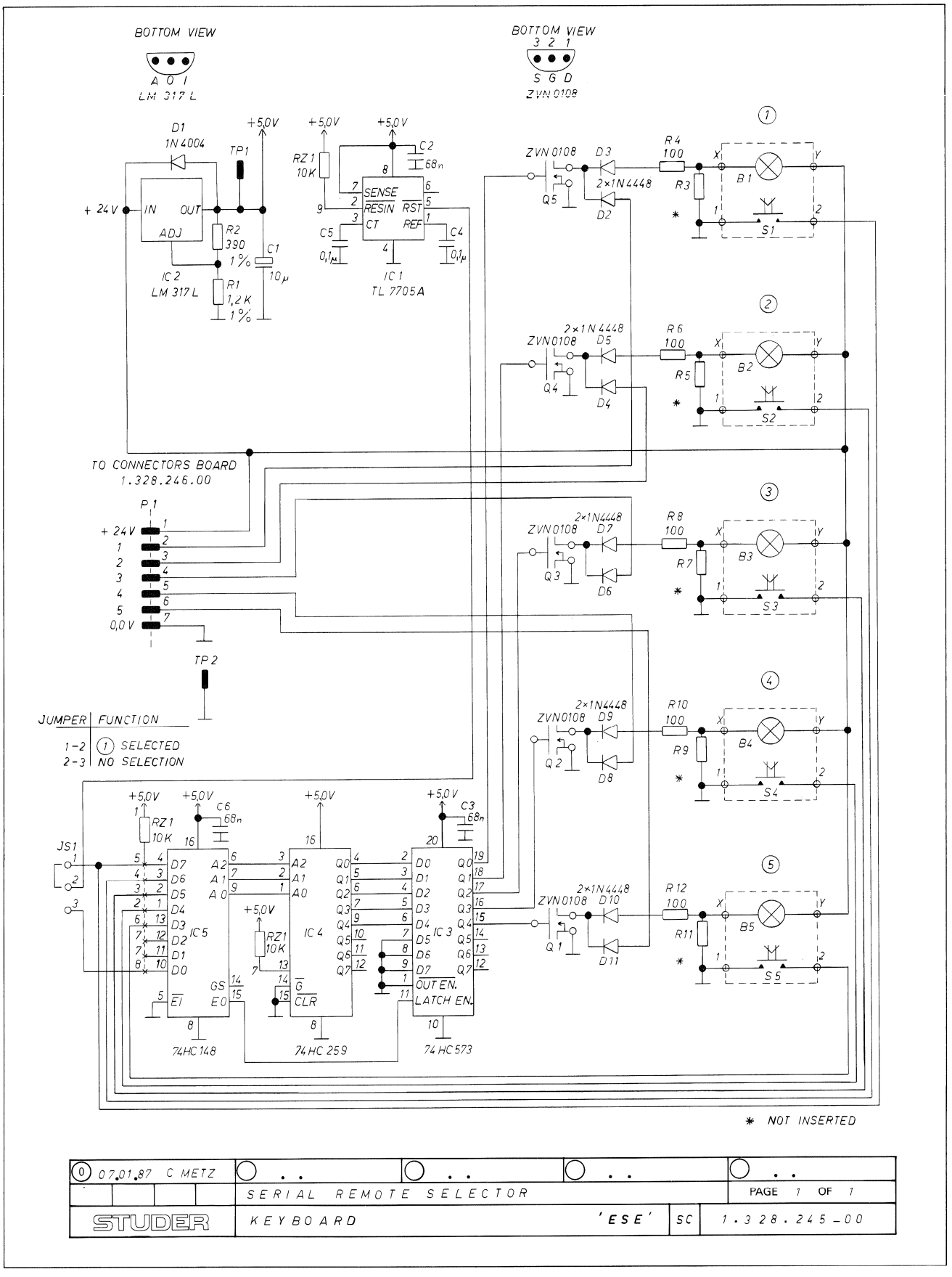

0 07.01.87 C METZ				
	SERIAL REMOTE SELECTOR			PAGE 1 OF 1
STUDER	KEYBOARD	'ESE'	SC	1.328.245-00

SERIAL REMOTE SELECTOR 1.328.248.00
–KEYBOARD 1.328.245.00

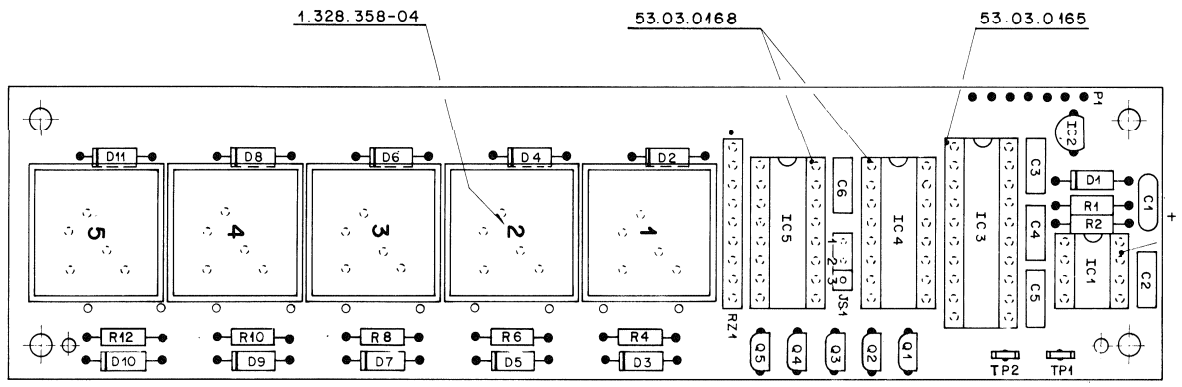

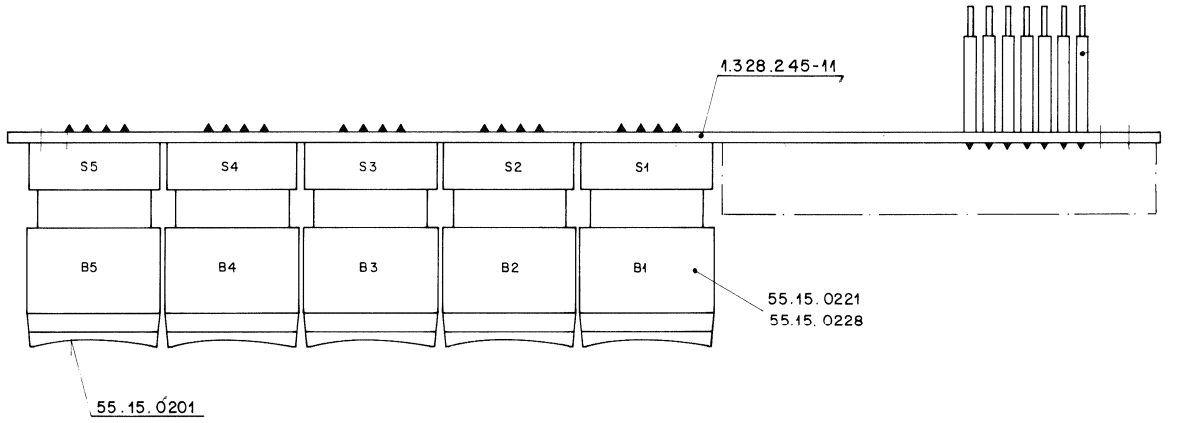

IND.	POS.NO.	PART NO.	VALUE	SPECIFICATIONS / EQUIVALENT	MANUF.
	C.....1	59.26.2100	10 u	20%, 16V , SAL	
	C.....2	59.06.0683	.068 u	10%, 63V , PETP	
	C.....3	59.06.0683	.068 u	10%, 63V , PETP	
	C.....4	59.06.0104	.1 u	10%, 63V , PETP	
	C.....5	59.06.0104	.1 u	10%, 63V , PETP	
	C.....6	59.06.0683	.068 u	10%, 63V , PETP	
	D.....1	50.04.0105	1N 4004	1A, 400V , Si.	
	D.....2	50.04.0125	1N 4448	0.1A, 75V , Si.	
	D.....3	50.04.0125	1N 4448	0.1A, 75V , Si.	
	D.....4	50.04.0125	1N 4448	0.1A, 75V , Si.	
	D.....5	50.04.0125	1N 4448	0.1A, 75V , Si.	
	D.....6	50.04.0125	1N 4448	0.1A, 75V , Si.	
	D.....7	50.04.0125	1N 4448	0.1A, 75V , Si.	
	D.....8	50.04.0125	1N 4448	0.1A, 75V , Si.	
	D.....9	50.04.0125	1N 4448	0.1A, 75V , Si.	
	D....10	50.04.0125	1N 4448	0.1A, 75V , Si.	
	D....11	50.04.0125	1N 4448	0.1A, 75V , Si.	
	B.....1	51.02.0158		24 V, 0.024 A, 0.6 W, BI PIN T 1	
	B.....2	51.02.0158		24 V, 0.024 A, 0.6 W, BI PIN T 1	
	B.....3	51.02.0158		24 V, 0.024 A, 0.6 W, BI PIN T 1	
	B.....4	51.02.0158		24 V, 0.024 A, 0.6 W, BI PIN T 1	
	B.....5	51.02.0158		24 V, 0.024 A, 0.6 W, BI PIN T 1	
	IC....1	50.11.0122	TL 7705 A	Supply Supervisor	TI
	IC....2	50.10.0108	LM 317 LZ	Adjustable Voltage Regulator	NS
	IC....3	50.17.1573	74 HC 573	Octal 3-state Noninv. D-type Transp. Latch	
	IC....4	50.17.1259	74 HC 259	8 Bit Addressable Latch / 1 of 8 Decoder	
	IC....5	50.17.1148	74 HC 148	8 to 3 Line Priority Encoder	
	JS....1	54.01.0021	2 * 0.63	Jumper (and 3 pins 54.01.0020)	
	P.....1	1.010.019.54	7 * 1 Pin	Right Contact Pin, L = 20 MM	
	Q.....1	50.03.1505	ZVN 0108 A	80 V, 1 A, N-Channel FET	Fe.
	Q.....2	50.03.1505	ZVN 0108 A	80 V, 1 A, N-Channel FET	Fe.

IND.	POS.NO.	PART NO.	VALUE	SPECIFICATIONS / EQUIVALENT	MANUF.
	Q.....3	50.03.1505	ZVN 0108 A	80 V, 1 A, N-Channel FET	Fe.
	Q.....4	50.03.1505	ZVN 0108 A	80 V, 1 A, N-Channel FET	Fe.
	Q.....5	50.03.1505	ZVN 0108 A	80 V, 1 A, N-Channel FET	Fe.
	R.....1	57.11.3122	1.2 k	1%, 0207 , MF	
	R.....2	57.11.3391	390	1%, 0207 , MF	
	R.....3			Not inserted	
	R.....4	57.11.4101	100	2%, 0207 , MF	
	R.....5			Not inserted	
	R.....6	57.11.4101	100	2%, 0207 , MF	
	R.....7			Not inserted	
	R.....8	57.11.4101	100	2%, 0207 , MF	
	R.....9			Not inserted	
	R....10	57.11.4101	100	2%, 0207 , MF	
	R....11			Not inserted	
	R....12	57.11.4101	100	2%, 0207 , MF	
	RZ....1	57.88.4103	8 * 10 k	In line	
	S.....1	55.15.0231	1 * A	Momentary Key Switch	EAO
	S.....2	55.15.0231	1 * A	Momentary Key Switch	EAO
	S.....3	55.15.0231	1 * A	Momentary Key Switch	EAO
	S.....4	55.15.0231	1 * A	Momentary Key Switch	EAO
	S.....5	55.15.0231	1 * A	Momentary Key Switch	EAO
	TP....1	54.02.0320	2.8 * 0.8	Straight Soldering Strip	
	TP....2	54.02.0320	2.8 * 0.8	Straight Soldering Strip	

IND. POS.NO. PART NO. VALUE SPECIFICATIONS / EQUIVALENT MANUF.

CER=Ceramic, EL=Electrolytic, MP=Metallized Paper, MPC=Metallized Polycarbonate, MPETP=Metallized Polyester, PC=Polycarbonate, PETP=Polyester
PP=Polypropylene, PS=Polystyrol, SAL=Solid Aluminium, TA=Tantal
Cermet=Ceramic Metal, MF=Metal Film.

MANUFACTURERS :

EAO = Elektro Apparaten Olten
Fe = Ferranti
NS = National Semiconductors
TI = Texas Instruments

ORIG 87/01/08

SERIAL REMOTE SELECTOR 1.328.248.00
–CONNECTORS PCB 1.328.246.00

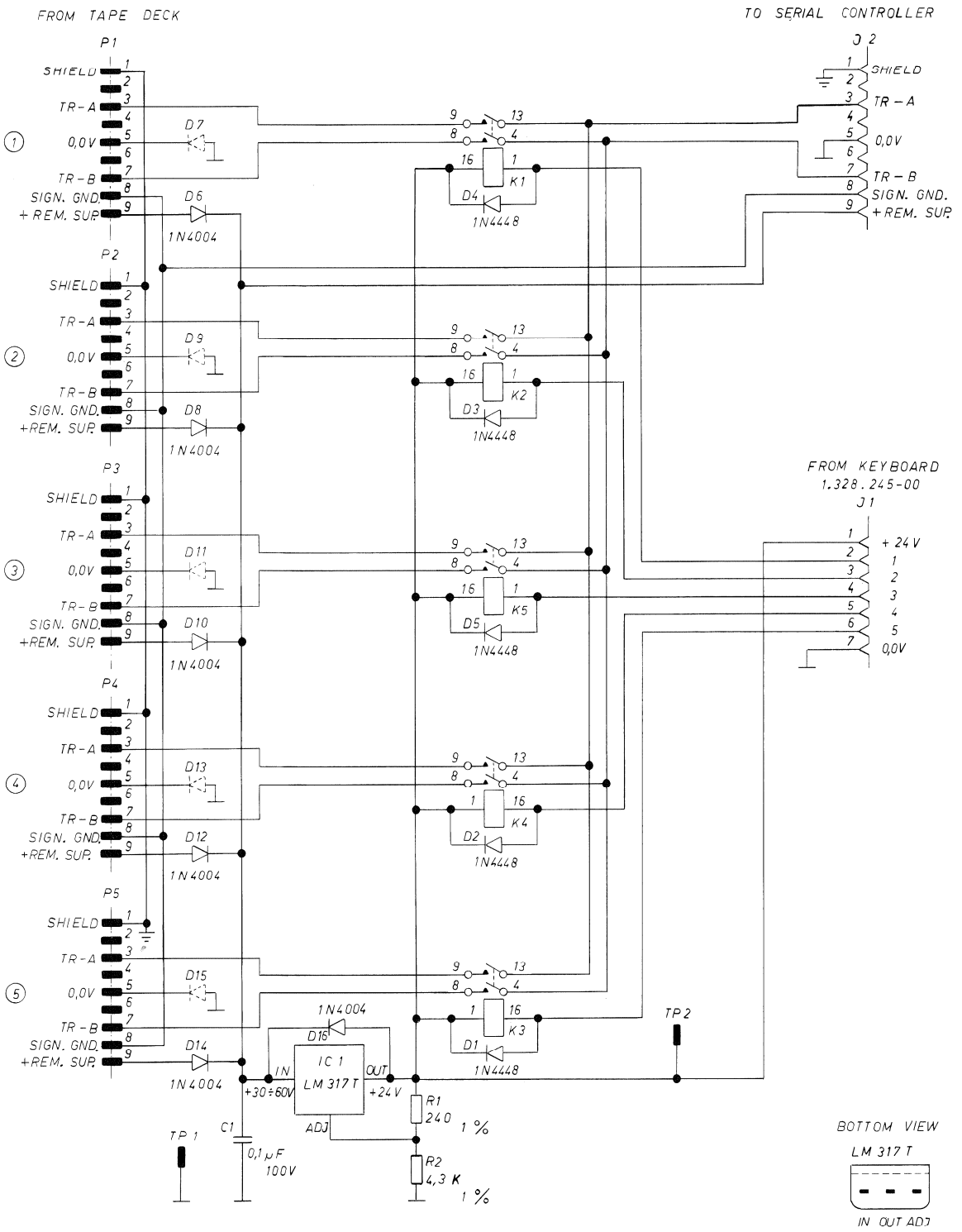

0 17.12.86 C. METZ	. .	. .	. .	. .
	SERIAL REMOTE SELECTOR			PAGE 1 OF 1
STUDER	CONNECTORS PCB		SC	1.328.246-00

SERIAL REMOTE SELECTOR 1.328.248.00
–CONNECTORS PCB 1.328.246.00

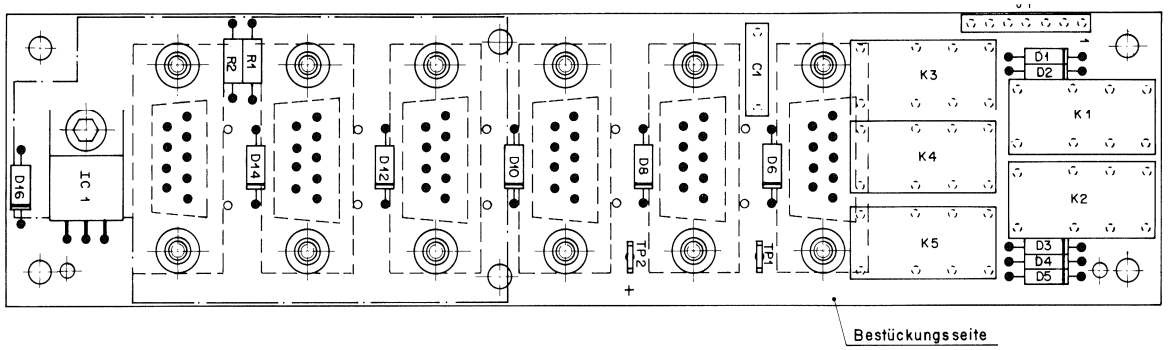

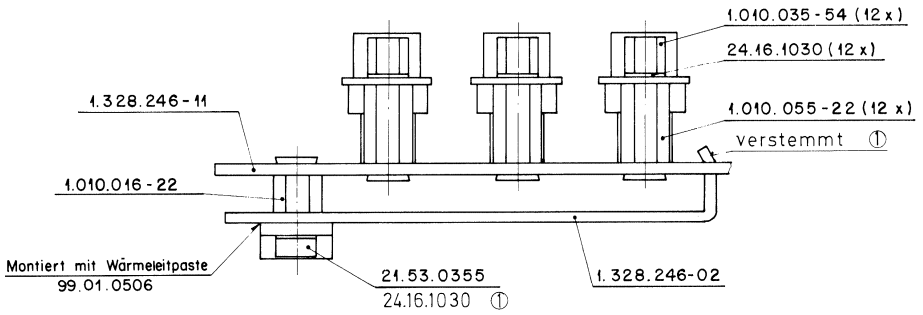

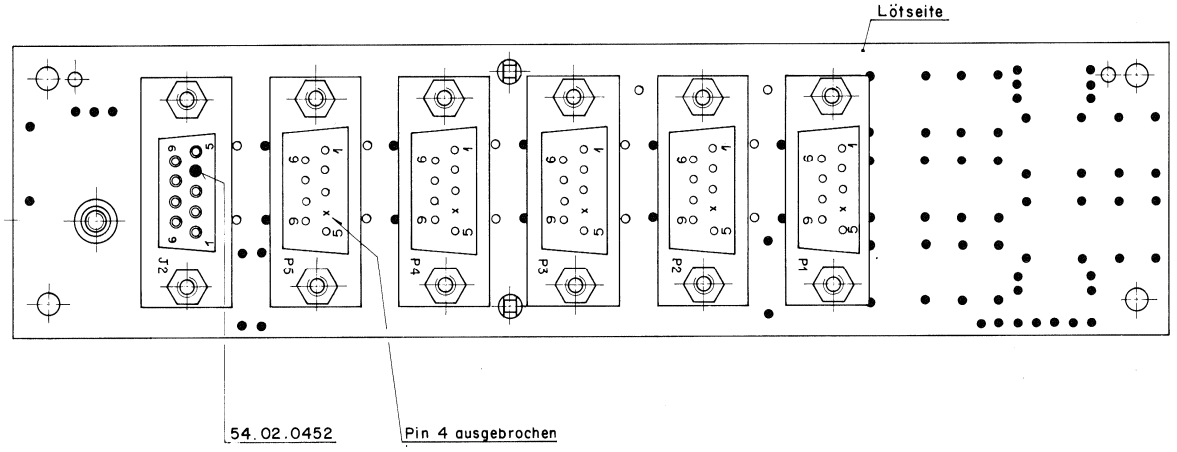

IND.	POS.NO.	PART NO.	VALUE	SPECIFICATIONS / EQUIVALENT	MANUF.
	C.....1	59.31.6104	0.1 u	10%, 100V , MPETP	
	D.....1	50.04.0125	1N 4448	75 V, 100 mA, Si	
	D.....2	50.04.0125	1N 4448	75 V, 100 mA, Si	
	D.....3	50.04.0125	1N 4448	75 V, 100 mA, Si	
	D.....4	50.04.0125	1N 4448	75 V, 100 mA, Si	
	D.....5	50.04.0125	1N 4448	75 V, 100 mA, Si	
	D.....6	50.04.0105	1N 4004	400 V, 1A, Si	
	D.....7			not inserted	
	D.....8	50.04.0105	1N 4004	400 V, 1A, Si	
	D.....9			not inserted	
	D....10	50.04.0105	1N 4004	400 V, 1A, Si	
	D....11			not inserted	
	D....12	50.04.0105	1N 4004	400 V, 1A, Si	
	D....13			not inserted	
	D....14	50.04.0105	1N 4004	400 V, 1A, Si	
	D....15			not inserted	
	D....16	50.04.0105	1N 4004	400 V, 1A, Si	
	IC....1	50.10.0104	LM 317 SP	Voltage regulator	Mot, TI
	J.....1	53.03.0218		7 Pins single line	
	J.....2	54.13.0021		D-type, 9 pins straight fem. print connector	
	K.....1	56.04.0161	RZ 2	24 V, 2 * u	ITT
	K.....2	56.04.0161	RZ 2	24 V, 2 * u	ITT
	K.....3	56.04.0161	RZ 2	24 V, 2 * u	ITT
	K.....4	56.04.0161	RZ 2	24 V, 2 * u	ITT
	K.....5	56.04.0161	RZ 2	24 V, 2 * u	ITT
	P.....1	54.13.0031		D-type, 9 pins straight male print connector	
	P.....2	54.13.0031		D-type, 9 pins straight male print connector	
	P.....3	54.13.0031		D-type, 9 pins straight male print connector	
	P.....4	54.13.0031		D-type, 9 pins straight male print connector	
	P.....5	54.13.0031		D-type, 9 pins straight male print connector	
	R.....1	57.11.3241	240	1%, 0207 , MF	

IND.	POS.NO.	PART NO.	VALUE	SPECIFICATIONS / EQUIVALENT	MANUF.
	R.....2	57.11.3432	4.3 k	1%, 0207 , MF	
	TP....1	54.02.0320	2.8 * 0.8	straight soldering strip	
	TP....2	54.02.0320	2.8 * 0.8	straight soldering strip	

MPETP = Metallized Polyester
MF = Metal Film.

MANUFACTURERS :
ITT = Intermetall
Mot = Motorola
TI = Texas Instruments

ORIG 86/12/17

AUTOLOCATOR MODULE 1.328.230.00
AUTOLOCATOR CABINET 1.328.240.00

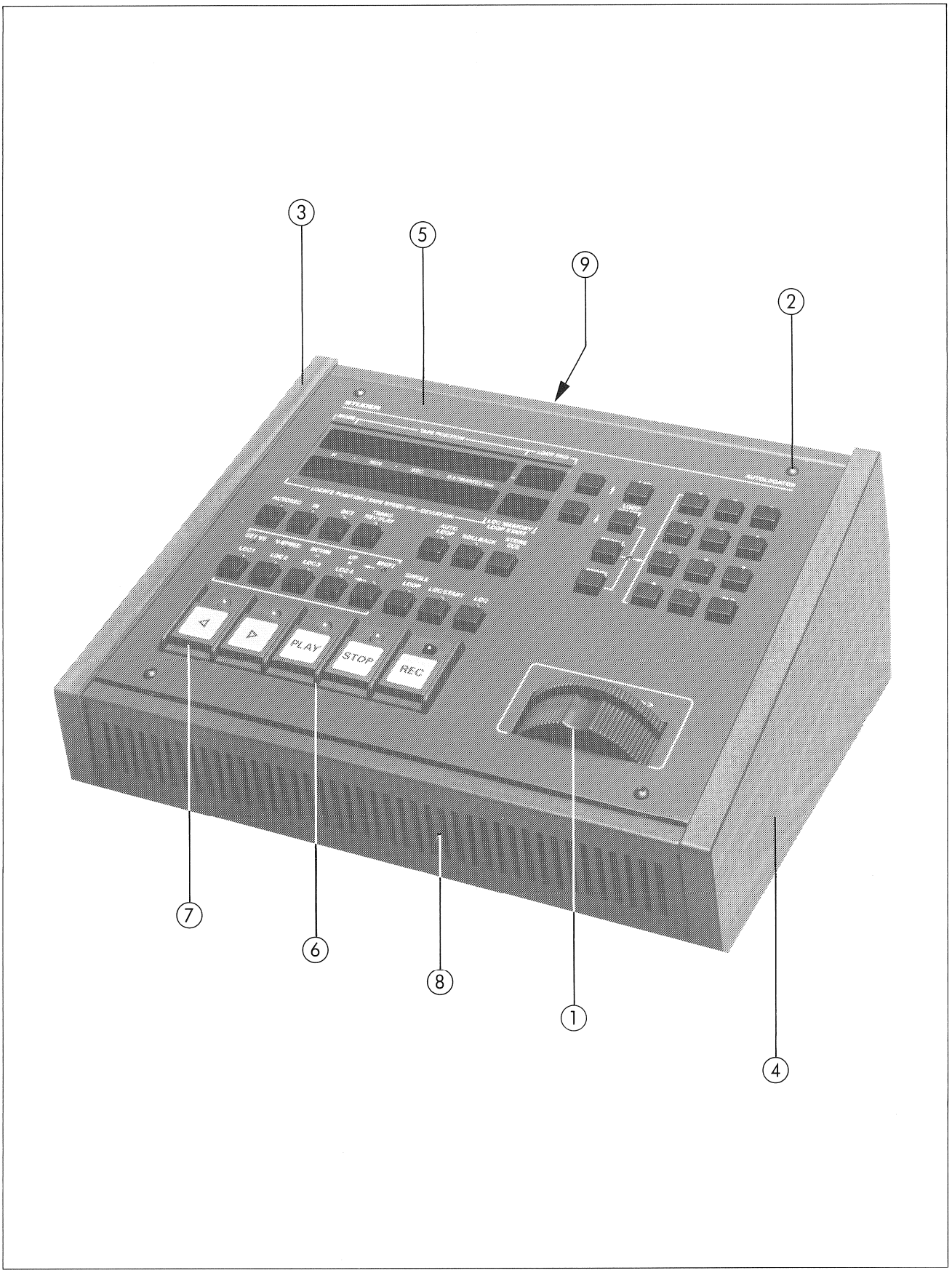

AUTOLACATOR MODULE 1.328.230.00
AUTOLOCATOR CABINET 1.328.240.00

Pos	QTY	Order Number	Part Name
	1	1.328.240.00	Autolocator: Cabinet
		1.328.230.00	Module
	5		Self-adhesive labels: see section 10.
	1	1.328.213.00	Stabilizer Board
1	1	1.328.215.00	Shuttle assembly compl.
	1	1.328.215.22	Shuttle wheel
	1	1.328.216.00	Shuttle bar compl.
	1	1.328.231.00	Push-button/Display Board
	1	1.328.232.20	Driver Board
	1	1.328.233.00	Push-button Board
2	10	1.010.025.21	Oval head allen screw M3x6
3	1	1.328.210.01	Side panel Left
	4	21.53.0454	Chees head allen screw M4x6
	4	24.16.1040	Fin washer
4	1	1.328.210.02	Side panel Right
	4	21.53.0454	Chees head allen screw M4x6
	4	24.16.1040	Fin washer
5	1	1.328.230.01	Front cover
	1	1.328.230.05	Glass pane printed on
6	1	1.810.300.03	Push-button housing
	1	1.810.300.06	Dumping strip
7	5	1.011.210.01	Push-button
	5	1.010.202.37	Pressure spring
8	1	1.328.240.01	Housing compl.
	4	31.02.0211	Foot
9	1	1.328.210.05	Connector holder for 9 Pin D-Typ
	2	1.010.032.54	Locking thread bolt

AUTOLOCATOR MODULE 1.328.230.00
AUTOLOCATOR CABINET 1.328.240.00
–STABILIZER BOARD 1.328.213.00

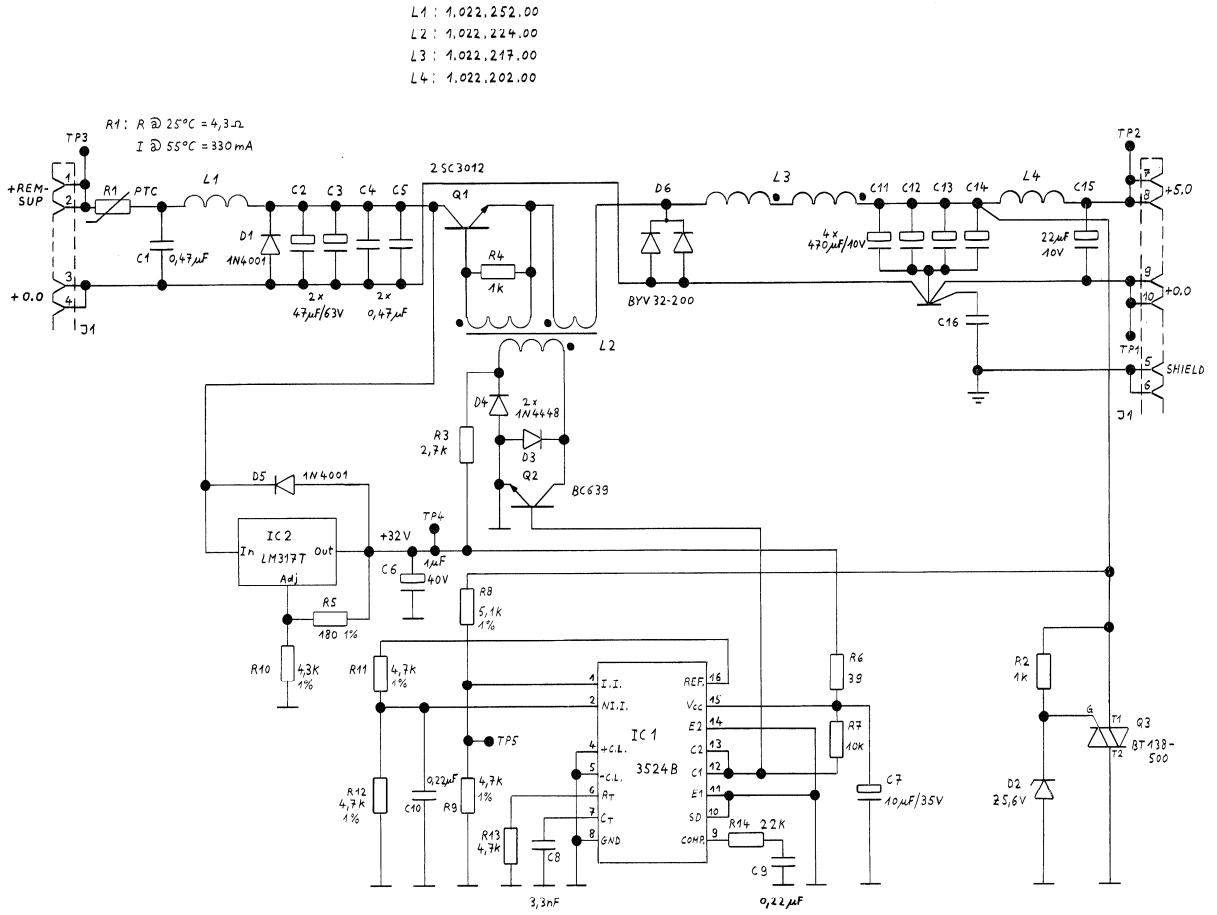

0 05.02.85 CHE	. .	. .	. .	. .
	A820/A812			PAGE 1 OF 1
STUDER	STABILIZER BOARD		SC	1.328.213.00

AUTOLOCATOR MODULE 1.328.230.00
AUTOLOCATOR CABINET 1.328.240.00
–STABILIZER BOARD 1.328.213.00

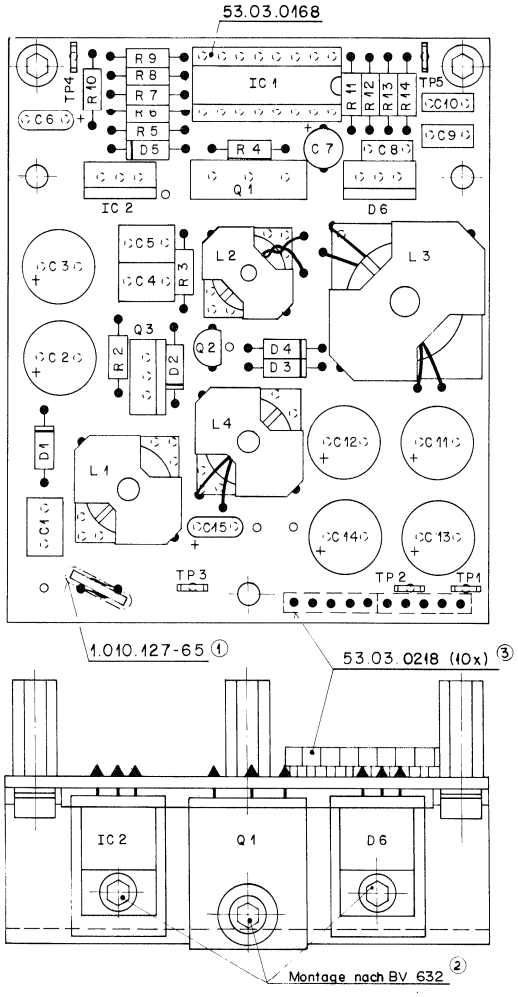

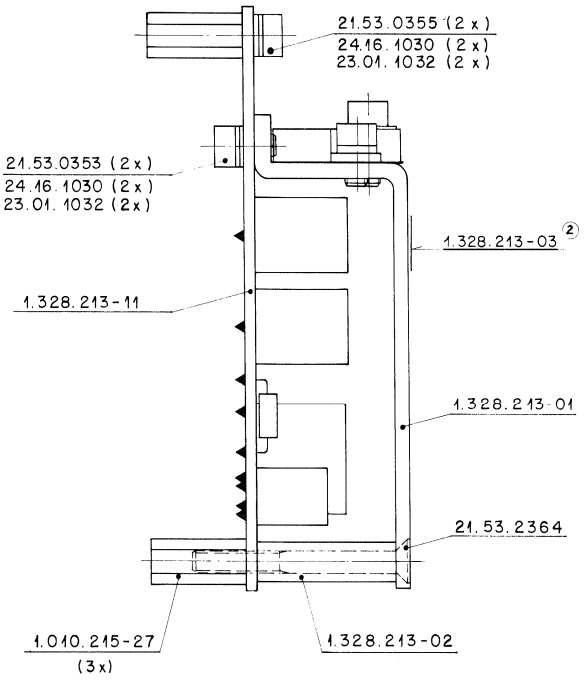

IND.	POS.NO.	PART NO.	VALUE	SPECIFICATIONS / EQUIVALENT	MANUF.
	R....01	57.92.1331	PTC	see note 2	Ph
	R....02	57.11.4102	1 kOhm	2%	
	R....03	57.11.4272	2.7 kOhm	2%	
	R....04	57.11.4102	1 kOhm	2%	
	R....05	57.11.3181	180 Ohm	1%	
	R....06	57.11.4390	39 Ohm	2%	
	R....07	57.11.4103	10 kOhm	2%	
	R....08	57.11.3512	5.1 kOhm	1%	
	R....09	57.11.3472	4.7 kOhm	1%	
	R....10	57.11.3432	4.3 kOhm	1%	
	R....11	57.11.3472	4.7 kOhm	1%	
	R....12	57.11.3472	4.7 kOhm	1%	
	R....13	57.11.4472	4.7 kOhm	2%	
	R....14	57.11.4223	22 kOhm	2%	
	P....01	54.02.0320	Test Point		
	P....02	54.02.0320	Test Point		
	P....03	54.02.0320	Test Point		
	P....04	54.02.0320	Test Point		
	P....05	54.02.0320	Test Point		

IND.	POS.NO.	PART NO.	VALUE	SPECIFICATIONS / EQUIVALENT	MANUF.
	C....01	59.06.0474	0.47 uF	10%, PETP	
	C....02	59.22.8470	47 uF	20%, 63V , EL	
	C....03	59.22.8470	47 uF	20%, 63V , EL	
	C....04	59.06.0474	0.47 uF	10%, PETP	
	C....05	59.06.0474	0.47 uF	10%, PETP	
	C....06	59.26.9109	1 uF	20%, 40V , SAL	
	C....07	59.22.6100	10 uF	-20%, 35V , EL	
	C....08	59.06.0332	3300 pF	10%, PETP	
	C....09	59.06.0224	0.22 uF	10%, PETP	
	C....10	59.06.0224	0.22 uF	10%, PETP	
	C....11	59.22.3471	470 uF	-20%, 10V , EL	
	C....12	59.22.3471	470 uF	-20%, 10V , EL	
	C....13	59.22.3471	470 uF	-20%, 10V , EL	
	C....14	59.22.3471	470 uF	-20%, 10V , EL	
	C....15	59.26.1220	22 uF	20%, 10V , SAL	
	D....01	50.04.0122	1N 4001		Mot
	D....02	50.04.1108	5.6 V	BZX83 C 5V6, BZX55 C 5V6, ZPD 5.6	Ses,ITT
	D....03	50.04.0125	1N 4448		Fc,ITT,Ph,Ses
	D....04	50.04.0125	1N 4448		Fc,ITT,Ph,Ses
	D....05	50.04.0122	1N 4001		Mot
	D....06	50.04.0517	BYV32-200		Mot,Ph
	IC...01	50.05.0279	SG 3524BN		SG
	IC...02	50.10.0104	LM 317T	LM 317 SP	Tho,Mot,NS,TI
	J....01			see note 1	
	L....01	1.022.252.00	0.32 mH	Filter Coil	St
	L....02	1.022.224.00		Power Supply Transformer	St
	L....03	1.022.217.00	46 uH	HF-Coil, 5A	St
	L....04	1.022.202.00	16.9 mH	Filter Coil	St
	Q....01	50.03.0517	2 SC 3012	NPN	NEC
	Q....02	50.03.0551	BC 639	NPN	Mot,Ph
	Q....03	50.99.0106	T 2800	400V, 8A,Triac	Ph

IND.	POS.NO.	PART NO.	VALUE	SPECIFICATIONS / EQUIVALENT	MANUF.

(01) 10.11.88 Connector see note 1.

EL=Electrolytic, SAL=Solid Aluminium, PETP=Polyester

MANUFACTURERS: Fc=Fairchild, ITT=Intermetall, Mot=Motorola,
NEC=Nippon Electric Corp., NS=National Semiconductors,
Ph=Philips, Ses=Sescosem, SG=Silicon General, St=Studer
Tho=Thomson, TI=Texas Instruments

(01) note 1 - Connector: 10 pieces Studer Nr.53.03.0218

note 2 - PTC Thermistor: R @ 25 degree Celsius = 4.7 Ohm
I @ 55 degree Celsius = 330 mA
Philips Nr.2322 663 13311

ORIG 85/02/05 (01) 88/11/10

AUTOLOCATOR MODULE 1.328.230.00
AUTOLOCATOR CABINET 1.328.240.00
–PUSHBUTTON / DISPLAY BOARD 1.328.231.00

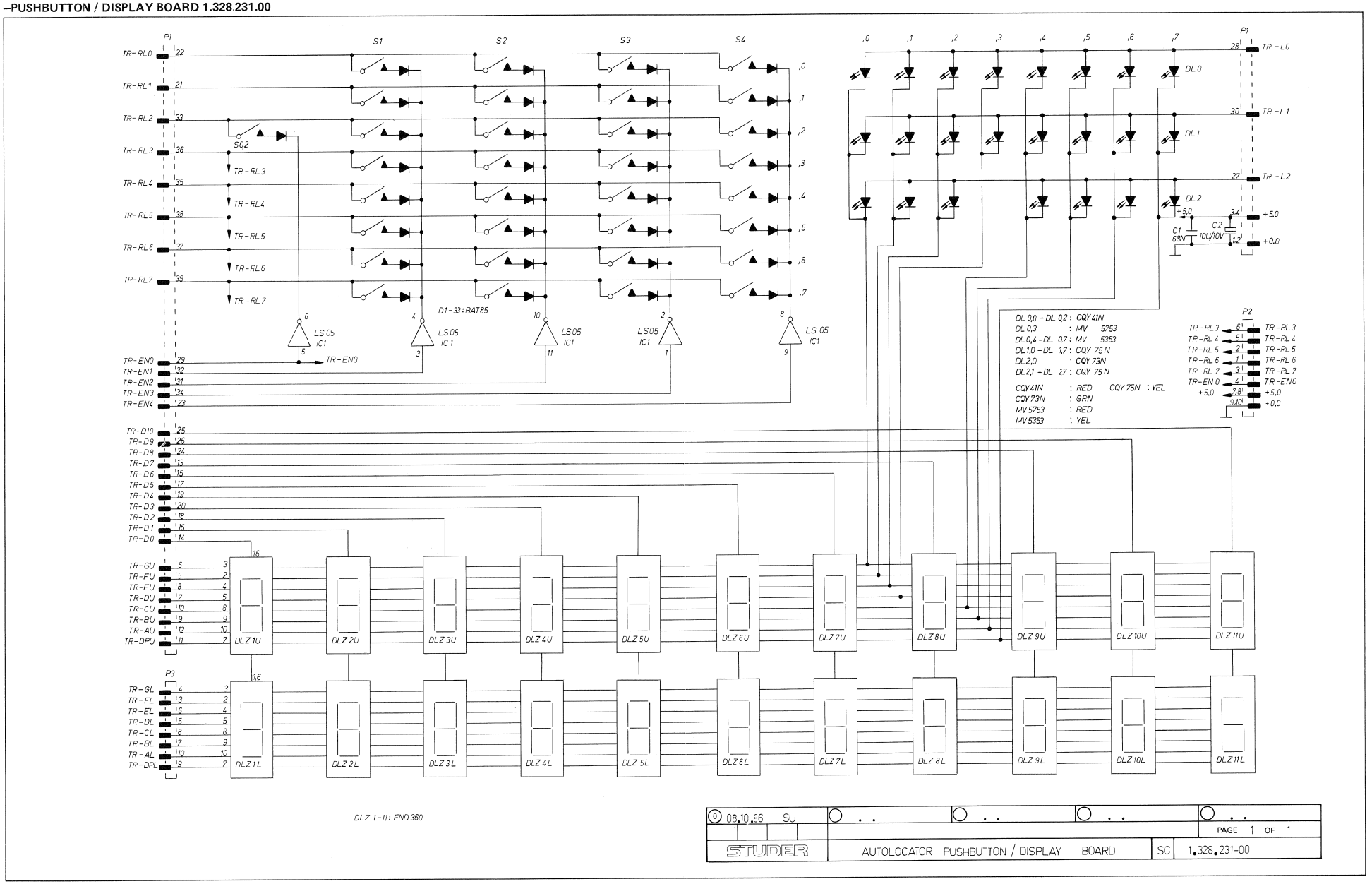

AUTOLOCATOR MODULE 1.328.230.00
AUTOLOCATOR CABINET 1.328.240.00
–PUSHBUTTON / DISPLAY BOARD 1.328.231.00

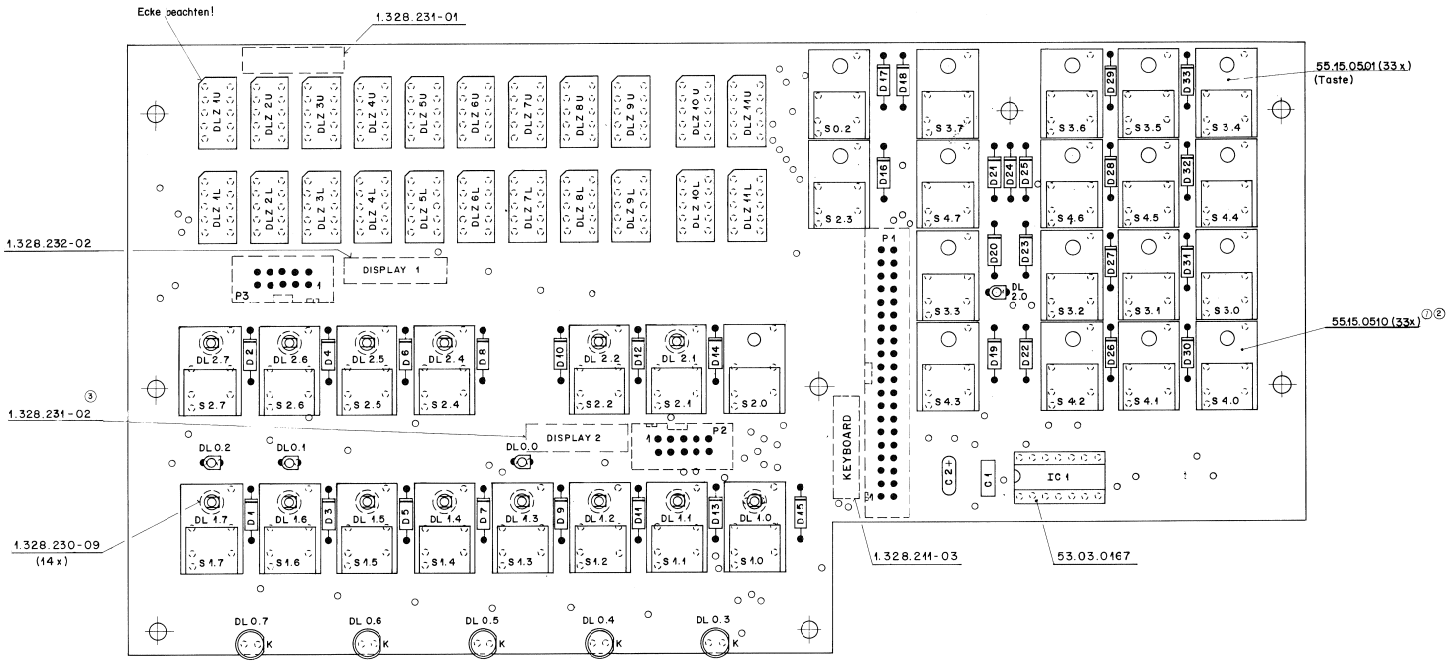

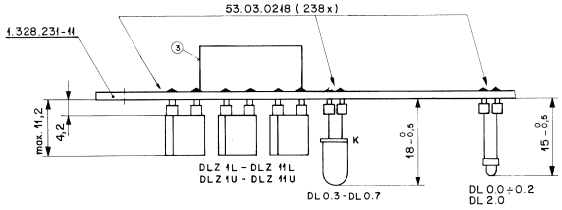

Achtung: DLZ 1L - DLZ 11L und
DLZ 1U - DLZ 11U
in zwei Linien ausgerichtet

Freistehende Dioden
senkrecht stecken

DL 1.0 ÷ DL 1.7] Dioden mit Diodenhalter
DL 2.1 ÷ DL 2.7] 1.328.230-09 eingelötet

IND.	POS.NO.	PART NO.	VALUE	SPECIFICATIONS / EQUIVALENT	MANUF.
	DL..0.0	50.04.2121	CQY 41N	LED, red	HP,Tf
	DL..0.1	50.04.2121	CQY 41N	LED, red	HP,Tf
	DL..0.2	50.04.2121	CQY 41N	LED, red	HP,Tf
	DL..0.3	50.04.2111	MV 5753	LED, red, HLMP 3301	CM,GI,HP
	DL..0.4	50.04.2112	MV 5353	LED, yellow, HLMP 3401	CM,GI,HP
	DL..0.5	50.04.2112	MV 5353	LED, yellow, HLMP 3401	CM,GI,HP
	DL..0.6	50.04.2112	MV 5353	LED, yellow, HLMP 3401	CM,GI,HP
	DL..0.7	50.04.2112	MV 5353	LED, yellow, HLMP 3401	CM,GI,HP
	DL..1.0	50.04.2133	CQY 75 N	LED, yellow	Tf
	DL..1.1	50.04.2133	CQY 75 N	LED, yellow	Tf
	DL..1.2	50.04.2133	CQY 75 N	LED, yellow	Tf
	DL..1.3	50.04.2133	CQY 75 N	LED, yellow	Tf
	DL..1.4	50.04.2133	CQY 75 N	LED, yellow	Tf
	DL..1.5	50.04.2133	CQY 75 N	LED, yellow	Tf
	DL..1.6	50.04.2133	CQY 75 N	LED, yellow	Tf
	DL..1.7	50.04.2133	CQY 75 N	LED, yellow	Tf
	DL..2.0	50.04.2132	CQY 73 N	LED, green	Tf
	DL..2.1	50.04.2133	CQY 75 N	LED, yellow	Tf
	DL..2.2	50.04.2133	CQY 75 N	LED, yellow	Tf
	DL..2.4	50.04.2133	CQY 75 N	LED, yellow	Tf
	DL..2.5	50.04.2133	CQY 75 N	LED, yellow	Tf
	DL..2.6	50.04.2133	CQY 75 N	LED, yellow	Tf
	DL..2.7	50.04.2133	CQY 75 N	LED, yellow	Tf
	DLZ.L01	73.01.0130	HDSP7301	7-Segments, red	HP
	DLZ.L02	73.01.0130	HDSP7301	7-Segments, red	HP
	DLZ.L03	73.01.0130	HDSP7301	7-Segments, red	HP
	DLZ.L04	73.01.0130	HDSP7301	7-Segments, red	HP
	DLZ.L05	73.01.0130	HDSP7301	7-Segments, red	HP
	DLZ.L06	73.01.0130	HDSP7301	7-Segments, red	HP
	DLZ.L07	73.01.0130	HDSP7301	7-Segments, red	HP
	DLZ.L08	73.01.0130	HDSP7301	7-Segments, red	HP
	DLZ.L09	73.01.0130	HDSP7301	7-Segments, red	HP
	DLZ.L10	73.01.0130	HDSP7301	7-Segments, red	HP
	DLZ.L11	73.01.0130	HDSP7301	7-Segments, red	HP
	DLZ.U01	73.01.0130	HDSP7301	7-Segments, red	HP
	DLZ.U02	73.01.0130	HDSP7301	7-Segments, red	HP

IND.	POS.NO.	PART NO.	VALUE	SPECIFICATIONS / EQUIVALENT	MANUF.
	DLZ.U03	73.01.0130	HDSP7301	7-Segments, red	HP
	DLZ.U04	73.01.0130	HDSP7301	7-Segments, red	HP
	DLZ.U05	73.01.0130	HDSP7301	7-Segments, red	HP
	DLZ.U06	73.01.0130	HDSP7301	7-Segments, red	HP
	DLZ.U07	73.01.0130	HDSP7301	7-Segments, red	HP
	DLZ.U08	73.01.0130	HDSP7301	7-Segments, red	HP
	DLZ.U09	73.01.0130	HDSP7301	7-Segments, red	HP
	DLZ.U10	73.01.0130	HDSP7301	7-Segments, red	HP
	DLZ.U11	73.01.0130	HDSP7301	7-Segments, red	HP
	IC....1	50.06.0005	74 LS 05		NS,Sig,TI
	P.....1	54.14.2004		see note 2	
	P.....2	54.14.2001		see note 3	
(01)	P.....3	1.023.110.03		flat cable 10 pol	
(02)	P.....3	54.14.2001		see note 3	
	S...0.2	55.15.0501		see note 1	
	S...1.0	55.15.0501		see note 1	
	S...1.1	55.15.0501		see note 1	
	S...1.2	55.15.0501		see note 1	
	S...1.3	55.15.0501		see note 1	
	S...1.4	55.15.0501		see note 1	
	S...1.5	55.15.0501		see note 1	
	S...1.6	55.15.0501		see note 1	
	S...1.7	55.15.0501		see note 1	
	S...2.0	55.15.0501		see note 1	
	S...2.1	55.15.0501		see note 1	
	S...2.2	55.15.0501		see note 1	
	S...2.3	55.15.0501		see note 1	
	S...2.4	55.15.0501		see note 1	
	S...2.5	55.15.0501		see note 1	
	S...2.6	55.15.0501		see note 1	
	S...2.7	55.15.0501		see note 1	
	S...3.0	55.15.0501		see note 1	
	S...3.1	55.15.0501		see note 1	
	S...3.2	55.15.0501		see note 1	

IND.	POS.NO.	PART NO.	VALUE	SPECIFICATIONS / EQUIVALENT	MANUF.
	C.....1	59.06.0083	68 nF	10%, PETP	
	C.....2	59.26.1100	10 uF	-20%, 10V, SAL	
	D.....1	50.04.0127	BAT 85		Ph,Sie
	D.....2	50.04.0127	BAT 85		Ph,Sie
	D.....3	50.04.0127	BAT 85		Ph,Sie
	D.....4	50.04.0127	BAT 85		Ph,Sie
	D.....5	50.04.0127	BAT 85		Ph,Sie
	D.....6	50.04.0127	BAT 85		Ph,Sie
	D.....7	50.04.0127	BAT 85		Ph,Sie
	D.....8	50.04.0127	BAT 85		Ph,Sie
	D.....9	50.04.0127	BAT 85		Ph,Sie
	D....10	50.04.0127	BAT 85		Ph,Sie
	D....11	50.04.0127	BAT 85		Ph,Sie
	D....12	50.04.0127	BAT 85		Ph,Sie
	D....13	50.04.0127	BAT 85		Ph,Sie
	D....14	50.04.0127	BAT 85		Ph,Sie
	D....15	50.04.0127	BAT 85		Ph,Sie
	D....16	50.04.0127	BAT 85		Ph,Sie
	D....17	50.04.0127	BAT 85		Ph,Sie
	D....18	50.04.0127	BAT 85		Ph,Sie
	D....19	50.04.0127	BAT 85		Ph,Sie
	D....20	50.04.0127	BAT 85		Ph,Sie
	D....21	50.04.0127	BAT 85		Ph,Sie
	D....22	50.04.0127	BAT 85		Ph,Sie
	D....23	50.04.0127	BAT 85		Ph,Sie
	D....24	50.04.0127	BAT 85		Ph,Sie
	D....25	50.04.0127	BAT 85		Ph,Sie
	D....26	50.04.0127	BAT 85		Ph,Sie
	D....27	50.04.0127	BAT 85		Ph,Sie
	D....28	50.04.0127	BAT 85		Ph,Sie
	D....29	50.04.0127	BAT 85		Ph,Sie
	D....30	50.04.0127	BAT 85		Ph,Sie
	D....31	50.04.0127	BAT 85		Ph,Sie
	D....32	50.04.0127	BAT 85		Ph,Sie
	D....33	50.04.0127	BAT 85		Ph,Sie

IND.	POS.NO.	PART NO.	VALUE	SPECIFICATIONS / EQUIVALENT	MANUF.
	S...3.3	55.15.0501		see note 1	
	S...3.4	55.15.0501		see note 1	
	S...3.5	55.15.0501		see note 1	
	S...3.6	55.15.0501		see note 1	
	S...3.7	55.15.0501		see note 1	
	S...4.0	55.15.0501		see note 1	
	S...4.1	55.15.0501		see note 1	
	S...4.2	55.15.0501		see note 1	
	S...4.3	55.15.0501		see note 1	
	S...4.4	55.15.0501		see note 1	
	S...4.5	55.15.0501		see note 1	
	S...4.6	55.15.0501		see note 1	
	S...4.7	55.15.0501		see note 1	

Note 1 - Change over switch non latching (Schadow)

Note 2 - Connector 40 contacts: Yamaichi Nr. FAP-40-08#4
Burndy Nr. BPH 9 B 40 BOO GS

Note 3 - Connector 10 contacts: Yamaichi Nr. FAP-10-08#4
Burndy Nr. BPH 9 B 10 BOO GS

PETP=Polyester, SAL=Solid Aluminium

MANUFACTURERS: CM=Chicago Miniatur, GI=General Instruments,
HP=Hewlett Packard, NS=National Semiconductors,
Ph=Philips, Sig=Signetics, TI=Texas Instruments

ORIG 86/10/08 (01) 87/06/03 (02) 89/06/07

AUTOLOCATOR MODULE 1.328.230.00
AUTOLOCATOR CABINET 1.328.240.00
–DRIVER BOARD 1.328.232.22

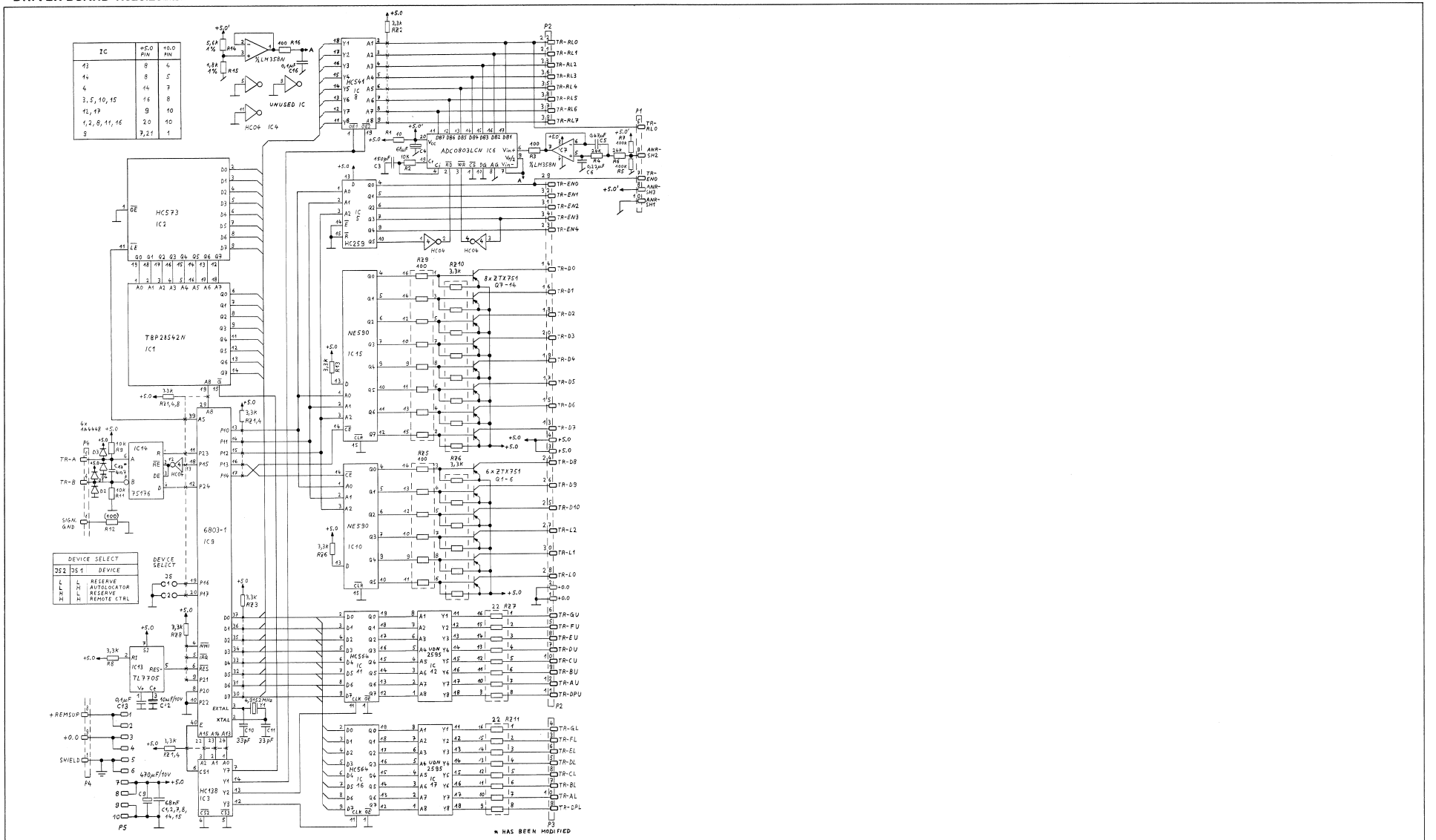

(20) 08.10.86 CHE	(21) . . not realized	(22) 05.06.87	(23) 25.09.89 Dub	. .
	A820/A812			PAGE 1 OF 1
STUDER	AUTOLOCATOR DRIVER BOARD 'ESE'		SC	1.328.232.00

AUTOLOCATOR MODULE 1.328.230.00
AUTOLOCATOR CABINET 1.328.240.00
–DRIVER BOARD 1.328.232.22

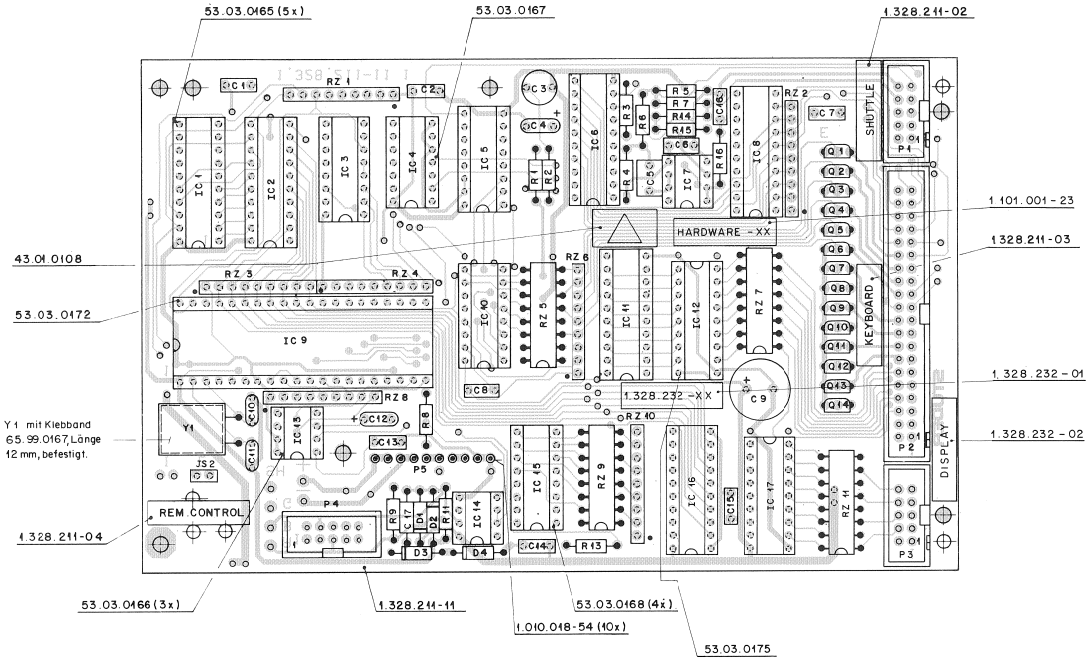

IND.	POS.NO.	PART NO.	VALUE	SPECIFICATIONS / EQUIVALENT	MANUF.
(20)	C.....1	59.06.0683	68 nF	10%, 63V, PETP	
(20)	C.....2	59.06.0683	68 nF	10%, 63V, PETP	
(20)	C.....3	59.05.2151	150 pF	2.5%, 63KV, PP	
(20)	C.....4	59.26.0680	68 uF	20%, 6.3V, SAL	
(20)	C.....5	59.06.0474	470 nF	10%, 63V, PETP	
(20)	C.....6	59.06.0224	220 nF	10%, 63V, PETP	
(20)	C.....7	59.06.0683	68 nF	10%, 63V, PETP	
(20)	C.....8	59.06.0683	68 nF	10%, 63V, PETP	
(20)	C.....9	59.22.3471	470 uF	-20%, 16V, EL	
(20)	C....10	59.34.2330	33 pF	5%, M150, CER	
(20)	C....11	59.34.2330	33 pF	5%, M150, CER	
(20)	C....12	59.26.1100	10 uF	20%, 16V, SAL	
(20)	C....13	59.06.0104	100 nF	10%, 63V, PETP	
(20)	C....14	59.06.0683	68 nF	10%, 63V, PETP	
(20)	C....15	59.06.0683	68 nF	10%, 63V, PETP	
(20)	C....16	59.06.0104	100 nF	10%, 63V, PETP	
(23)	C....17	59.03.2472	4.7 nF	10%, 63V, PETP	
(20)	D.....1	50.04.0125	1N 4448		Fc,ITT,Ph,Sea,Tf
(20)	D.....2	50.04.0125	1N 4448		Fc,ITT,Ph,Sea,Tf
(20)	D.....3	50.04.0125	1N 4448		Fc,ITT,Ph,Sea,Tf
(20)	D.....4	50.04.0125	1N 4448		Fc,ITT,Ph,Sea,Tf
(00)	IC.....1	50.14.0120	TBP28S42N		TI
(20)	IC.....1	1.328.999.21		Software 50/86	St
(22)	IC.....1	1.328.999.22		Software 29/87	St
(20)	IC.....2	50.17.1573	74 HC 573	.. 74 HC 573 .	Mot,NS,Ph,RCA,SGS,TI,To
(20)	IC.....3	50.17.1138	74 HC 138	.. 74 HC 138 .	Mot,NS,Ph,RCA,SGS,TI,To
(20)	IC.....4	50.17.1004	74 HC 04	.. 74 HC 04 .	Mot,NS,Ph,RCA,TI,To
(20)	IC.....5	50.17.1259	74 HC 259	.. 74 HC 259 .	Mot,NS,Ph,RCA,SGS,TI,To
(20)	IC.....6	50.07.0029	ADC0803LCN		Ns,NS
(20)	IC.....7	50.05.0286	LM 358 N	LM 358 I	Mot,NS,TI
(20)	IC.....8	50.17.1541	74 HC 541	.. 74 HC 541 .	Mot,NS,Ph,RCA,SGS,TI,To
(20)	IC.....9	50.16.0107	MC 68B03P-1	HD 68B03-1	Hi,Mot
(20)	IC....10	50.15.0102	NE 590 N		Sig
(20)	IC....11	50.17.1564	74 HC 564	.. 74 HC 564 .	Mot,NS,Ph,RCA,SGS,TI,To
(20)	IC....12	50.15.0118	UDN 2595A		Sp

IND.	POS.NO.	PART NO.	VALUE	SPECIFICATIONS / EQUIVALENT	MANUF.
(20)	IC....13	50.11.0122	TL7705ACP		TI
(20)	IC....14	50.13.0115	SN 75176AP	DS 3695 N	NS,TI
(20)	IC....15	50.13.0102	NE 590 N		Sig
(20)	IC....16	51.07.1564	74 HC 564	.. 74 HC 564	Mot,NS,Ph,RCA,SGS,TI,To
(20)	IC....17	50.13.0118	UDN 2595A		Sg
(20)	JS....2			see note 1	
(20)	P.....1			see note 2	
(20)	P.....2			see note 3	
(20)	P.....3			see note 2	
(20)	P.....4			see note 2	
(20)	P.....5			see note 4	
(20)	Q.....1	50.03.0352	ZTX 751 S		Fe
(20)	Q.....2	50.03.0352	ZTX 751 S		Fe
(20)	Q.....3	50.03.0352	ZTX 751 S		Fe
(20)	Q.....4	50.03.0352	ZTX 751 S		Fe
(20)	Q.....5	50.03.0352	ZTX 751 S		Fe
(20)	Q.....6	50.03.0352	ZTX 751 S		Fe
(20)	Q.....7	50.03.0352	ZTX 751 S		Fe
(20)	Q.....8	50.03.0352	ZTX 751 S		Fe
(20)	Q.....9	50.03.0352	ZTX 751 S		Fe
(20)	Q....10	50.03.0352	ZTX 751 S		Fe
(20)	Q....11	50.03.0352	ZTX 751 S		Fe
(20)	Q....12	50.03.0352	ZTX 751 S		Fe
(20)	Q....13	50.03.0352	ZTX 751 S		Fe
(20)	Q....14	50.03.0352	ZTX 751 S		Fe
(20)	R.....1	57.11.4100	10 Ohm	2%	
(20)	R.....2	57.11.4103	10 kOhm	2%	
(20)	R.....3	57.11.4101	100 Ohm	2%	
(20)	R.....4	57.11.3243	24 kOhm	1%	
(20)	R.....5	57.11.4104	100 kOhm	2%	
(20)	R.....6	57.11.3243	24 kOhm	1%	
(20)	R.....7	57.11.4104	100 kOhm	2%	
(20)	R.....8	57.11.4332	3.3 kOhm	2%	

IND.	POS.NO.	PART NO.	VALUE	SPECIFICATIONS / EQUIVALENT	MANUF.
(20)	R.....9	57.11.4103	10 kOhm	2%	
(20)	R....10	57.11.4102	1 kOhm	2%	
(23)	R....10		not used	replaced by C17	
(20)	R....11	57.11.4103	10 kOhm	2%	
(20)	R....12		not used		
(20)	R....13	57.11.4332	3.3 kOhm	2%	
(20)	R....14	57.11.3562	5.6 kOhm	1%	
(20)	R....15	57.11.3182	1.8 kOhm	1%	
(20)	R....16	57.11.4101	100 Ohm	2%	
(20)	RZ....1	57.88.4332		Network, 8 * 3.3 kOhm, 5%, single line	
(20)	RZ....2	57.88.4332		Network, 8 * 3.3 kOhm, 5%, single line	
(20)	RZ....3	57.88.4332		Network, 8 * 3.3 kOhm, 5%, single line	
(20)	RZ....4	57.88.4332		Network, 8 * 3.3 kOhm, 5%, single line	
(20)	RZ....5	57.88.3101		Network, 8 * 100 Ohm, 2%, DIL 16	
(20)	RZ....6	57.88.4332		Network, 8 * 3.3 kOhm, 5%, single line	
(20)	RZ....7	57.88.3220		Network, 8 * 22 Ohm, 2%, DIL 16	
(20)	RZ....8	57.88.4332		Network, 8 * 3.3 kOhm, 5%, single line	
(20)	RZ....9	57.88.3101		Network, 8 * 100 Ohm, 2%, DIL 16	
(20)	RZ...10	57.88.4332		Network, 8 * 3.3 kOhm, 5%, single line	
(20)	RZ...11	57.88.3220		Network, 8 * 22 Ohm, 2%, DIL 16	
(20)	Y.....1	89.01.0560	4.9152 MH	z +-100 ppM, Nymph Nr. TD 18/WMP 049	

IND.	POS.NO.	PART NO.	VALUE	SPECIFICATIONS / EQUIVALENT	MANUF.

(20) 08.10.86 PCB lay-out -11.

(21) Skiped.

(22) 05.06.87 Software 29/87.

(23) 25.09.89 Improved nois suppression on differential line.

Note 1 - Jumper Switch
2 Contact Pins: Studer Nr. 54.01.0020
Berg Nr. 75 160-102-36
Philips Nr. 2422 025 89303
1 Jumper Studer Nr. 54.01.0021

Note 2 - Connector, 10 Contacts
Studer Nr. 54.14.2001
Yamaichi Nr. FAP-10-08//4
Burndy Nr. BPH 7 B 10 B00 GS

Note 3 - Connector, 40 Contacts
Studer Nr. 54.14.2004
Yamaichi Nr. FAP-40-08//4
Burndy Nr. BPH 9 B 40 B00 GS

Note 4 - Connector: 10 Pieces
Studer Nr. 1.010.018.54

CER=Ceramic, EL=Electrolytic, PETP=Polyester Film, PP=Polypropylen,
SAL=Solid Aluminium.

MANUFACTURERS: Fc=Fairchild, Fe=Ferranti, Hi=Hitachi, In=Intersil,
ITT=Internetall, Mot=Motorola, NS=National Semiconductors
Ph=Philips, RCA=RCA Corporation, Sea=Saxosea, SGS=SGS/Ates,

IND.	POS.NO.	PART NO.	VALUE	SPECIFICATIONS / EQUIVALENT	MANUF.

Sig=Signetics, St=Studer, Tf=Telefunken,
TI=Texas Instruments, To=Toshiba.

ORIG 86/10/08 (20) 86/10/08 (22) 87/06/05 (23) 89/09/25

AUTOLOCATOR MODULE 1.328.230.00
AUTOLOCATOR CABINET 1.328.240.00
–PUSHBUTTON BOARD 1.328.233.00

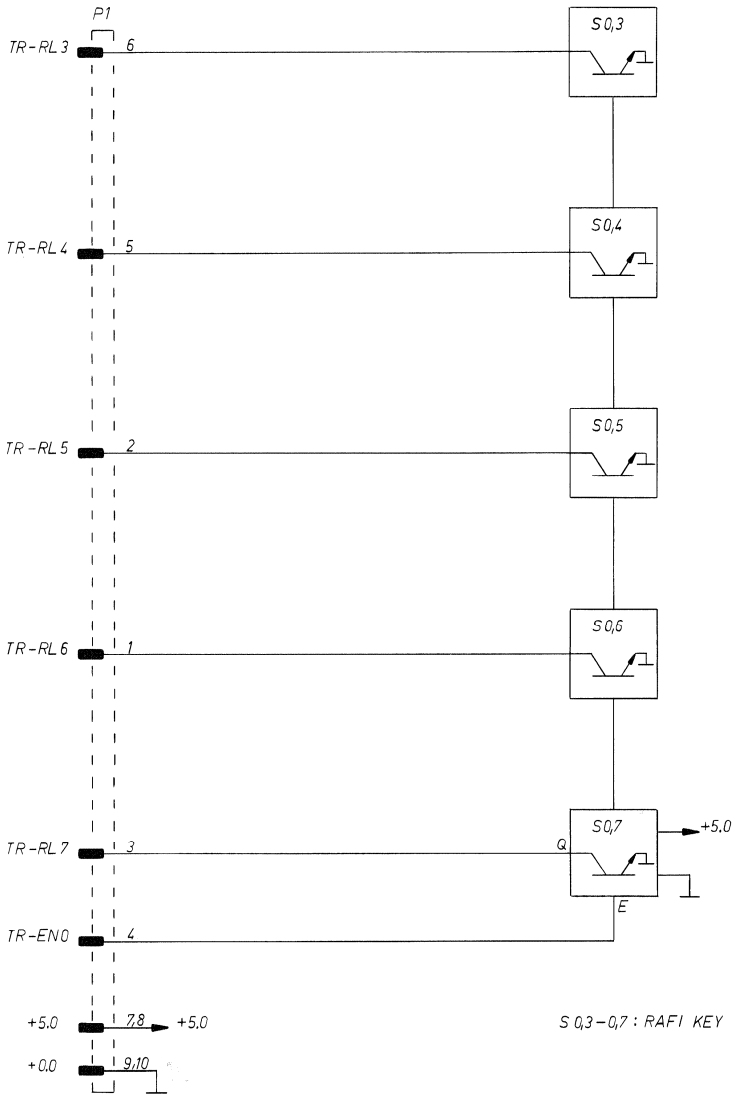

0 08.10.86 SU				
				PAGE 1 OF 1
STUDER	AUTOLOCATOR PUSHBUTTON BOARD		SC	1.328.233-00

AUTOLOCATOR MODULE 1.328.230.00
AUTOLOCATOR CABINET 1.328.240.00
–PUSHBUTTON BOARD 1.328.233.00

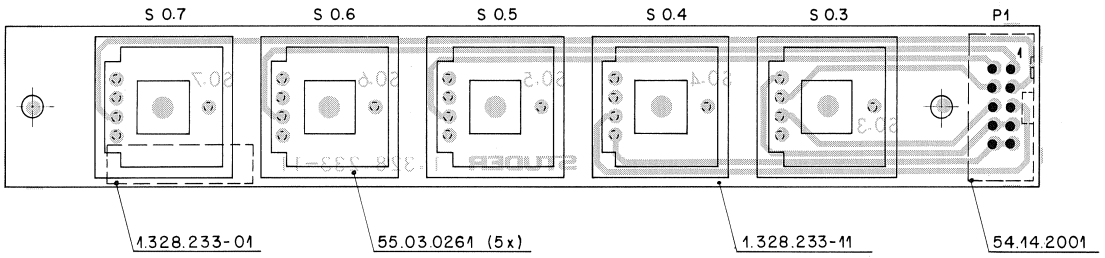

IND.	POS.NO.	PART NO.	VALUE	SPECIFICATIONS / EQUIVALENT	MANUF.
	P....01	54.14.2001		see note 1	
	S...0.3	55.03.0261	TTL-switch	1 * OC, Rafi Nr. 3.13001.110	
	S...0.4	55.03.0261	TTL-switch	1 * OC, Rafi Nr. 3.13001.110	
	S...0.5	55.03.0261	TTL-switch	1 * OC, Rafi Nr. 3.13001.110	
	S...0.6	55.03.0261	TTL-switch	1 * OC, Rafi Nr. 3.13001.110	
	S...0.7	55.03.0261	TTL-switch	1 * OC, Rafi Nr. 3.13001.110	

Note 1 - Connector 10 contacts: Yamaichi Nr. FAP-10-08#4
Burndy Nr. BPH 9 B 10 B00 GS

ORIG 86/10/08

S T U D E R (00) 86/10/08 BD AUTOLOCATOR PUSHBUTTON BOARD PL 1.328.233.00 PAGE 1

AUTOLOCATOR MODULE 1.328.230.00
AUTOLOCATOR CABINET 1.328.240.00
–PUSHBUTTON BOARD 1.328.233.81

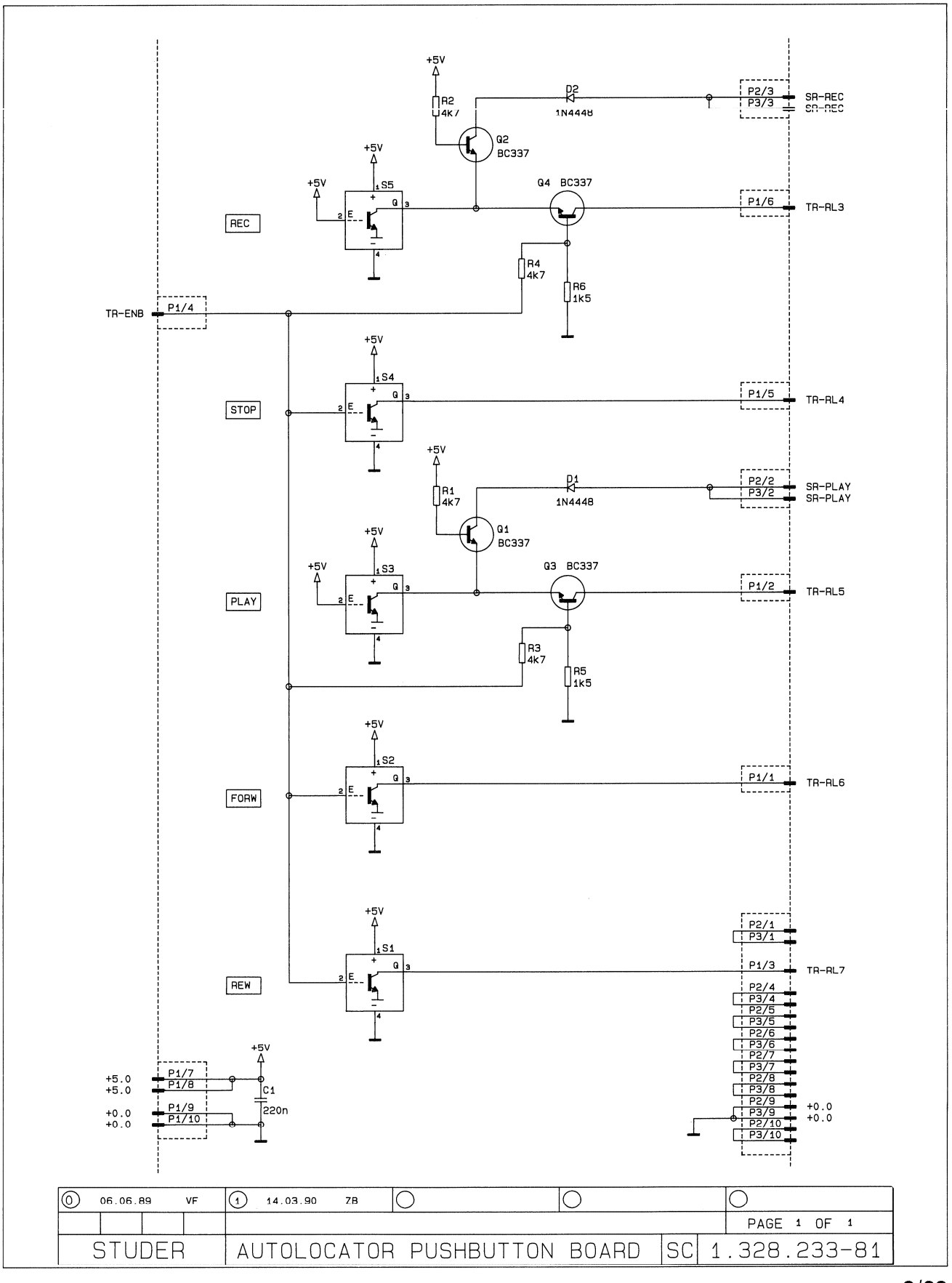

AUTOLOCATOR MODULE 1.328.230.00
AUTOLOCATOR CABINET 1.328.240.00
–PUSHBUTTON BOARD 1.328.233.81

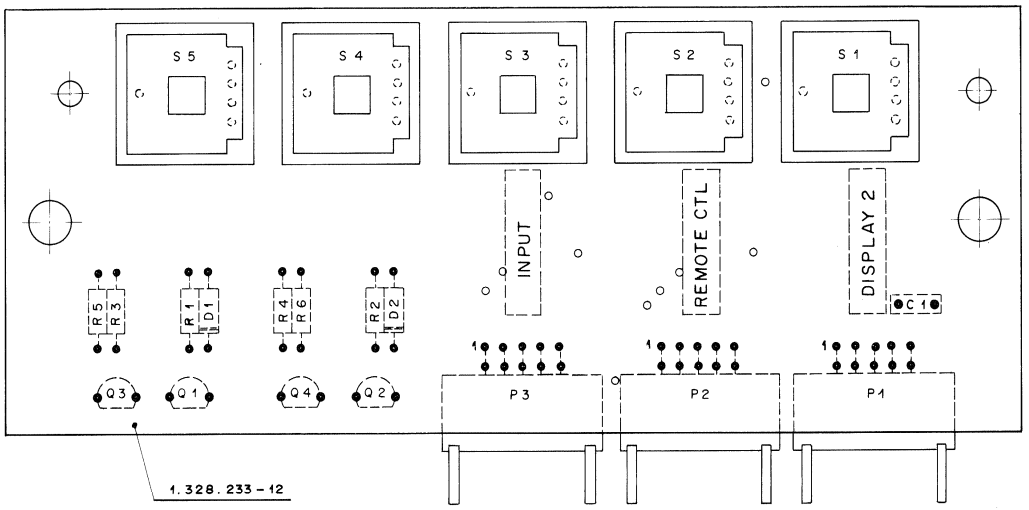

IND.	POS.NO.	PART NO.	VALUE	SPECIFICATIONS / EQUIVALENT	MANUF.
	C.....1	59.06.0224	220 nF	10%, PETP	
	D.....1	50.04.0125	1N 4448		
	D.....2	50.04.0125	1N 4448		
	P.....1	54.14.2111	Connector	10 contacts, latch, flat cable	
	P.....2	54.14.2111	Connector	10 contacts, latch, flat cable	
	P.....3	54.14.2111	Connector	10 contacts, latch, flat cable	
	Q.....1	50.03.0156	BC337		Sie
	Q.....2	50.03.0156	BC337		Sie
	Q.....3	50.03.0156	BC337		Sie
	Q.....4	50.03.0156	BC337		Sie
	R.....1	57.11.3472	4.7 kOhm	5%	
	R.....2	57.11.3472	4.7 kOhm	5%	
	R.....3	57.11.3472	4.7 kOhm	5%	
	R.....4	57.11.3472	4.7 kOhm	5%	
(00)	R.....5	57.11.3102	1 kOhm	5%	
(01)	R.....5	57.11.3152	1.5 kOhm	5%	
(00)	R.....6	57.11.3102	1 kOhm	5%	
(01)	R.....6	57.11.3152	1.5 kOhm	5%	
	S.....1	55.03.0261	TTL-switch	1 * OC, Rafi Nr. 3.13001.110	
	S.....2	55.03.0261	TTL-switch	1 * OC, Rafi Nr. 3.13001.110	
	S.....3	55.03.0261	TTL-switch	1 * OC, Rafi Nr. 3.13001.110	
	S.....4	55.03.0261	TTL-switch	1 * OC, Rafi Nr. 3.13001.110	
	S.....5	55.03.0261	TTL-switch	1 * OC, Rafi Nr. 3.13001.110	

IND.	POS.NO.	PART NO.	VALUE	SPECIFICATIONS / EQUIVALENT	MANUF.

(01) 14.03.90 Value of R5, R6 changed for higher reliability

MANUFACTURER: GI=General Instruments, Is=Intersil, Ma=Maxim, Mot=Motorola,
NS=National Semiconductors, Ph=Philips,
RCA=RCA Corporation of America, SGS=SGS/Ates, Sie=Siemens,
St=Studer, TI=Texas Instruments, To=Toshiba.

ORIG 89/06/06 (01) 90/03/14

AUDIO REMOTE CONTROL 8CH 1.328.501.00
AUDIO REMOTE CONTROL 24CH 1.328.503.00

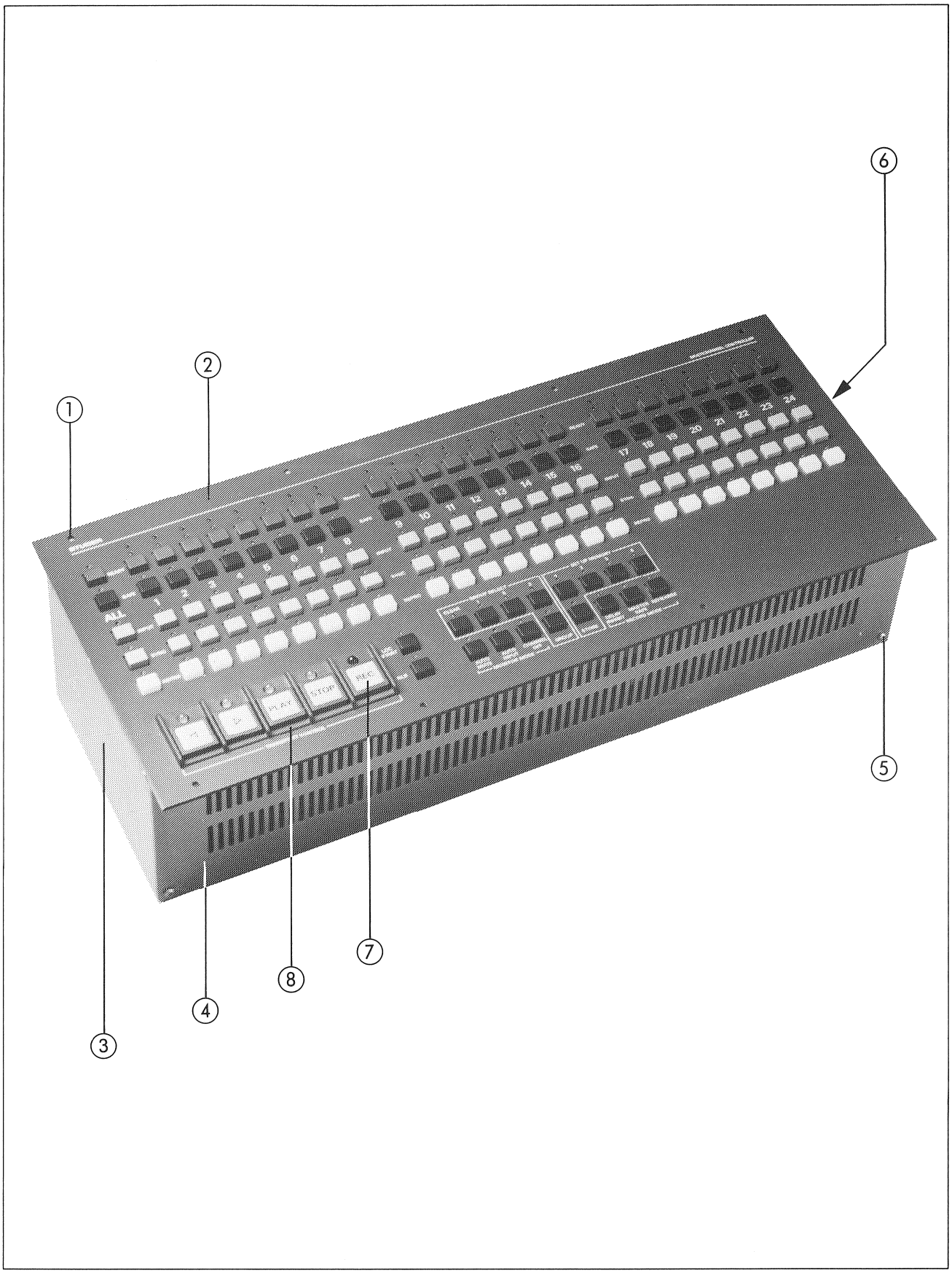

AUDIO REMOTE CONTROL 8CH 1.328.501.00
AUDIO REMOTE CONTROL 24CH 1.328.503.00

Pos	Qty	Order No.	Part Name / Specification
*		1.328.501.00 1.328.503.00	AUDIO REMOTE CTR. MODUL 8CH AUDIO REMOTE CTR. MODUL 24CH
	5		Self-adhesive labels: see section 10
	1	1.820.706.00	DC-Converter 5,6V
	1	1.820.705.00	Basis Board VU-Panel
	1	1.820.783.24	MPU VU-Panel MCH
*	1 1	1.328.510.00 1.328.504.00	Key Board 8CH Key Board 24CH
	1	1.328.505.00	Key Board Driver
1	8	1.010.025.21	Oval head allen screw blk, M3x6
* 2	1	1.328.501.01 1.328.503.01	Front cover 8CH Front cover 24CH
3	1	1.328.503.03	Box for Remote
4	1	1.328.503.05	Cover for electronics
5	7	21.51.8454	Oval head allen screw Ni, M3x6
6	1	1.328.507.00	Socket prewired compl.
7	5	1.011.210.01	Push button
8	1 1	1.810.300.03 1.810.300.06	Push button housing Dumping strip

AUDIO REMOTE CONTROL 8CH 1.328.501.00
AUDIO REMOTE CONTROL 24CH 1.328.503.00
–DC CONVERTER 1.820.706.00

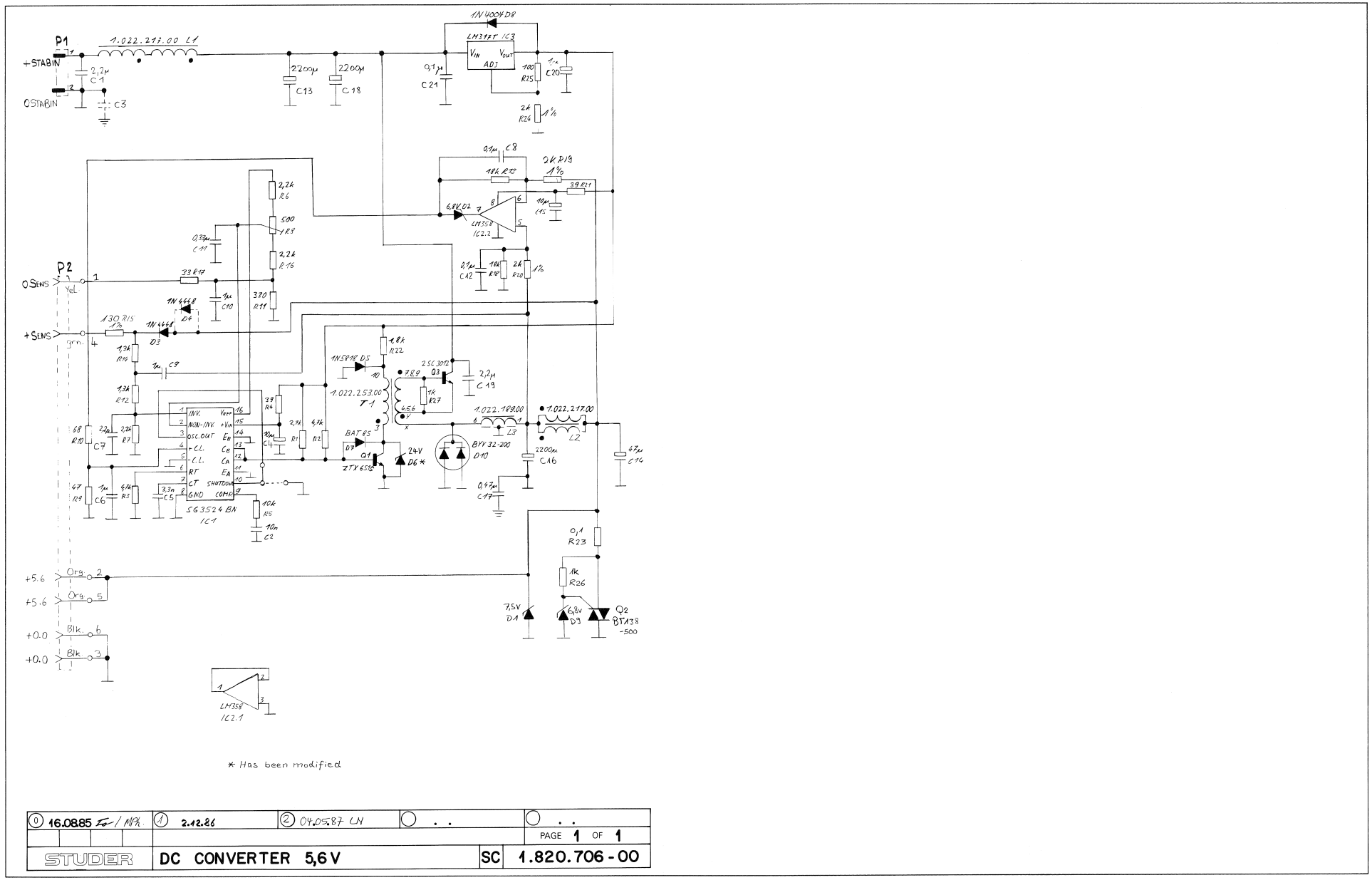

⓪ 16.08.85 Fo / MP	① 2.12.86	② 04.05.87 LN	. .	. .
				PAGE 1 OF 1
STUDER	DC CONVERTER 5,6 V		SC	1.820.706-00

AUDIO REMOTE CONTROL 8CH 1.328.501.00
AUDIO REMOTE CONTROL 24CH 1.328.503.00
–DC CONVERTER 1.820.706.00

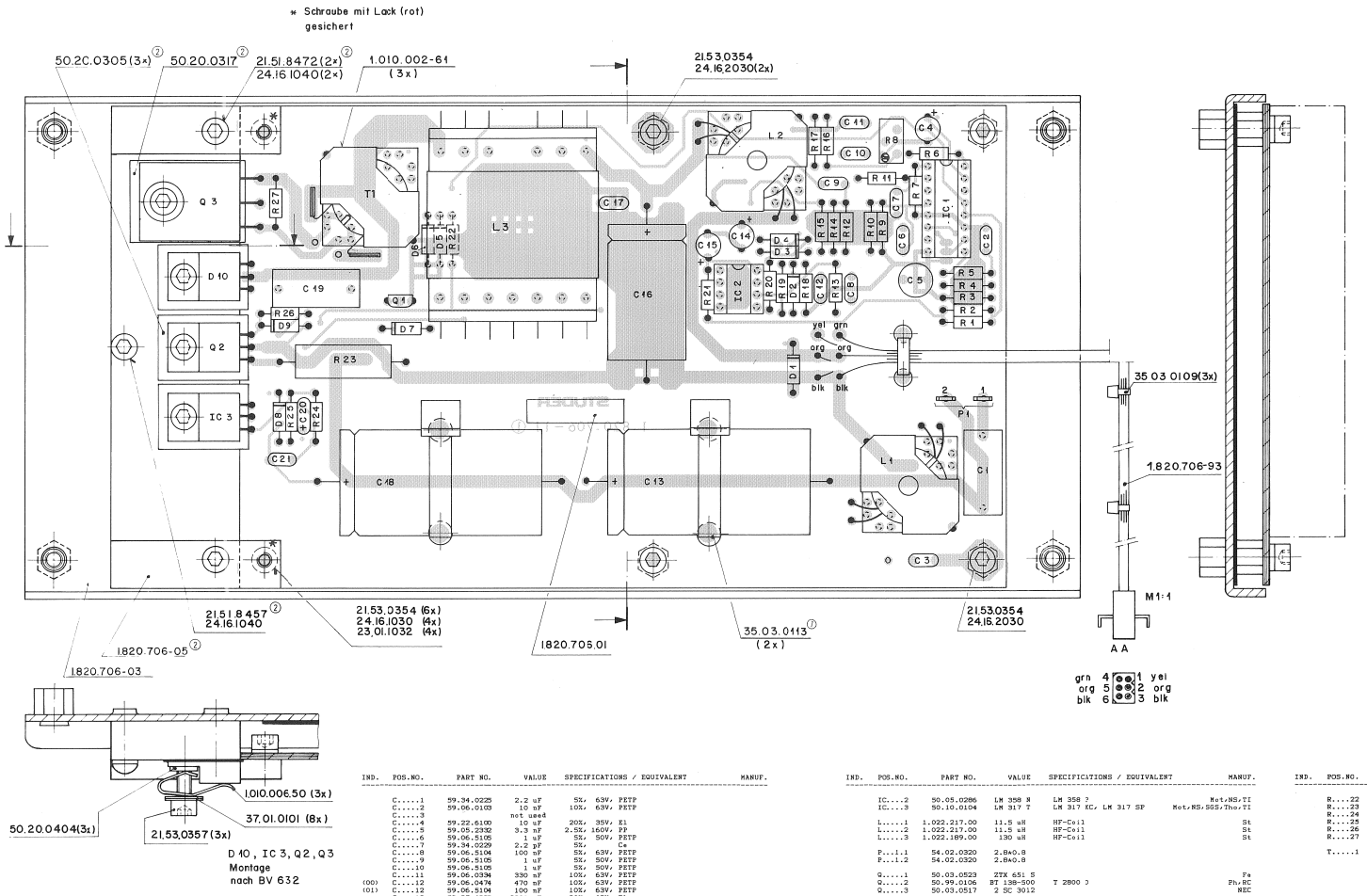

IND.	POS.NO.	PART NO.	VALUE	SPECIFICATIONS / EQUIVALENT	MANUF.
	C....1	59.34.0225	2.2 uF	5%, 63V, PETP	
	C....2	59.06.0103	10 nF	10%, 63V, PETP	
	C....3		not used		
	C....4	59.22.6100	10 uF	20%, 35V, El	
	C....5	59.05.2332	3.3 nF	2.5%, 160V, PP	
	C....6	59.06.5105	1 uF	5%, 50V, PETP	
	C....7	59.34.0229	2.2 pF	5%, Ce	
	C....8	59.06.5104	100 nF	5%, 63V, PETP	
	C....9	59.06.5105	1 uF	5%, 50V, PETP	
	C....10	59.06.5105	1 uF	5%, 50V, PETP	
	C....11	59.06.0334	330 nF	10%, 63V, PETP	
(00)	C....12	59.06.0474	470 nF	10%, 63V, PETP	
(01)	C....12	59.06.5104	100 nF	10%, 63V, PETP	
	C....13	59.25.6222	2200 uF	20%, 63V, El	
	C....14	59.22.3470	47 uF	20%, 10V, El	
	C....15	59.22.6100	10 uF	20%, 35V, El	
	C....16	59.25.3222	2200 uF	20%, 16V, El	
	C....17	59.06.0474	470 nF	10%, 63V, PETP	
	C....18	59.25.6222	2200 uF	20%, 63V, El	
	C....19	59.02.0225	2.2 uF	5%, 63V, MPC	
(00)	C....20	59.25.6102	1000 uF	-20%, 63V, EL	
(01)	C....20	59.26.9109	1 uF	10%, 40V, Sal	
	C....21	59.06.5104	100 nF	5%, 63V, PETP	
	D....1	50.04.1503	7.5V Z	1.3 W	Sse
	D....2	50.04.1102	6.8V Z	0.4 W	ITT,Sse
	D....3	50.04.0125	1N 4448		Fe,ITT,Ph,Sse,Tf
	D....4	50.04.0125	1N 4448		Fe,ITT,Ph,Sse,Tf
	D....5	50.04.0512	1N 5818	1N 5819	Mot
(00)	D....6	50.04.0125	1N 4448		Fe,ITT,Ph,Sse,Tf
(02)	D....6	50.04.1121	24 V Z	BZX 55-C24	ITT,Mot,Ph,Tf,Tho
	D....7	50.04.0127	BAT 42	BAT 35, BAS 40-02	Ph,Sie
	D....8	50.04.0105	1N 4004	... 4007	Mot
	D....9	50.04.1102	6.8V Z	0.4 W	ITT,Sse
	D....10	50.04.0517	BYV 32-200		Ph
	IC....1	50.05.0279	SG 3524 BN		SG

IND.	POS.NO.	PART NO.	VALUE	SPECIFICATIONS / EQUIVALENT	MANUF.
	IC....2	50.05.0286	LM 358 N	LM 358 ?	Mot,NS,TI
	IC....3	50.10.0104	LM 317 T	LM 317 KC, LM 317 SP	Mot,NS,SGS,Tho,TI
	L....1	1.022.217.00	11.5 uH	HF-Coil	St
	L....2	1.022.217.00	11.5 uH	HF-Coil	St
	L....3	1.022.189.00	130 uH	HF-Coil	St
	P....1.1	54.02.0320	2.8x0.8		
	P....1.2	54.02.0320	2.8x0.8		
	Q....1	50.03.0523	ZTX 651 S		Fe
	Q....2	50.99.0106	BT 139-500	T 2800 D	Ph,RC
	Q....3	50.03.0517	2 SC 3012		NEC
	R....1	57.11.4272	2.7 kOhm	5%	
	R....2	57.11.4472	4.7 kOhm	5%	
	R....3	57.11.4472	4.7 kOhm	5%	
	R....4	57.11.4390	39 Ohm	5%	
	R....5	57.11.4103	10 kOhm	5%	
	R....6	57.11.4222	2.2 kOhm	5%	
	R....7	57.11.4222	2.2 kOhm	5%	
	R....8	56.05.1501	500 Ohm	10% see note 1	
	R....9	57.11.4470	47 Ohm	5%	
	R....10	57.11.4680	68 Ohm	5%	
	R....11	57.11.4331	330 Ohm	5%	
(00)	R....12	57.11.4132	1.3 kOhm	2%	
(01)	R....12	57.11.3132	1.3 kOhm	1%	
	R....13	57.11.4103	10 kOhm	5%	
(00)	R....14	57.11.4132	1.3 kOhm	2%	
(01)	R....14	57.11.3132	1.3 kOhm	1%	
	R....15	57.11.3131	130 Ohm	2%	
	R....16	57.11.4222	2.2 kOhm	5%	
	R....17	57.11.4330	33 Ohm	5%	
	R....18	57.11.4103	10 kOhm	5%	
	R....19	57.11.3202	2 kOhm	2%	
	R....20	57.11.3202	2 kOhm	2%	
	R....21	57.11.4390	39 Ohm	5%	

IND.	POS.NO.	PART NO.	VALUE	SPECIFICATIONS / EQUIVALENT	MANUF.
	R....22	57.11.4182	1.8 kOhm	5%	
	R....23	57.56.5108	0.1 Ohm	10%, 4 W	
	R....24	57.11.3202	2 kOhm	2%	
	R....25	57.11.4101	100 Ohm	5%	
	R....26	57.11.4102	1 kOhm	5%	
	R....27	57.11.4102	1 kOhm	5%	
	T....1	1.022.253.00		POWER SUPPLY DRIVE TRANSFORMER	St

(01) 12.01.87 Corrector of Print error.

(02) 04.05.87 D6 replaced by Zener diode 24V
(overvoltage protection of D7).

NOTE 1 - 500 Ohm Potentiometer lin., 10%
Bourns Nr. 3296 Z -1 - 501
Spectrol Nr. 64 Z 501 I 000
Murata Nr. POT 3105 Z - 1 - 501

Ce=Ceramic, El=Electrolytic, Sal=Solid Aluminium,
MPC=Metallized Polycarbonat, PETP=Polyesterfilm, PP=Polypropylene.

MANUFACTURER : Fe=Fairchild, Fe=Ferranti, ITT=Intermetall, Mot=Motorola,
NEC=Nippon Electric Corp., NS=National Semiconductors,
Ph=Philips, RCA=RCA Corporation of America, Sse=Seecosem,
SG=Silicon General, SGS=SGS/Ates, Sie=Siemens, St=Studer,
Tf=Telefunken, Tho=Thomsen CSF, TI=Texas Instruments.

ORIG 86/06/20 (01) 87/01/12 (02) 87/05/04

AUDIO REMOTE CONTROL 8CH 1.328.501.00
AUDIO REMOTE CONTROL 24CH 1.328.503.00
–BASIS BOARD VU PANEL 1.820.705.00

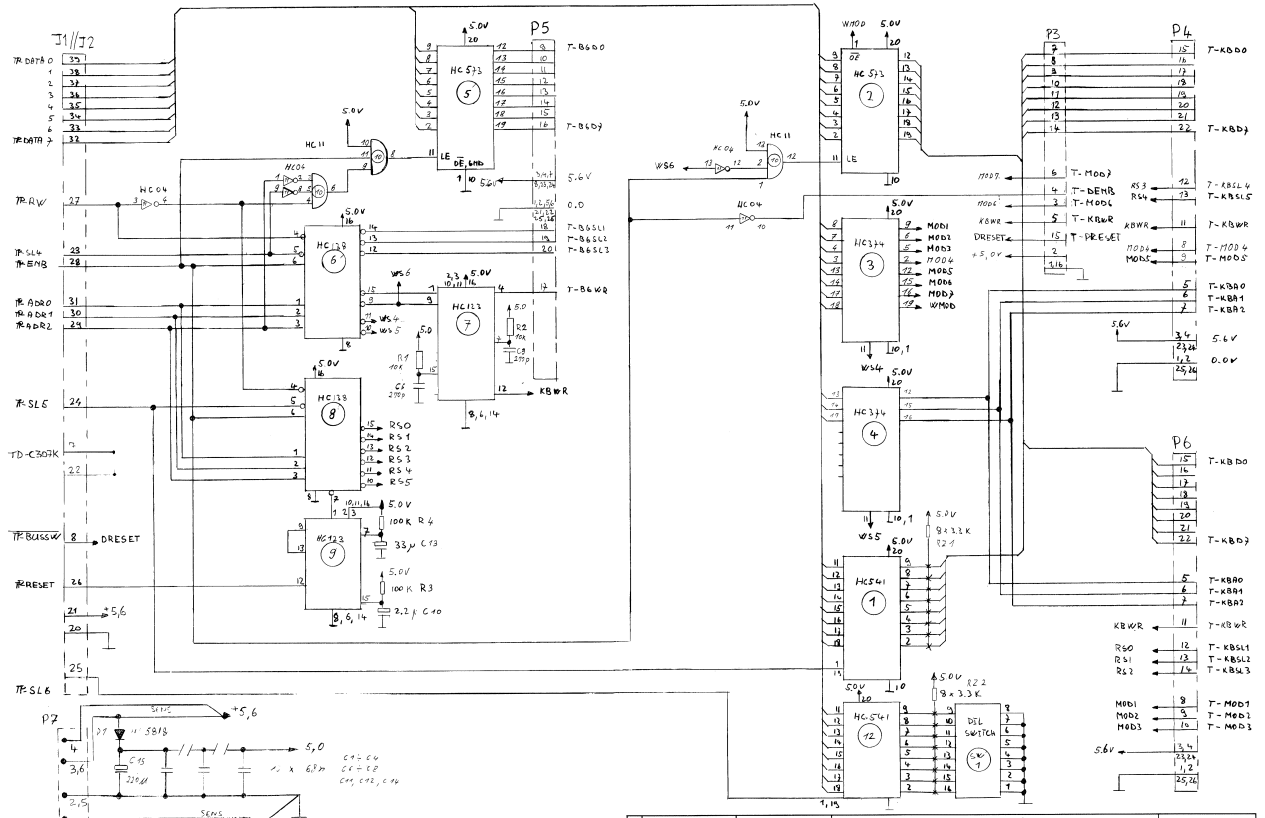

11.09.86				
STUDER	BASIS BOARD VU PANEL	SC	1.820.705-00	PAGE 1 OF 2

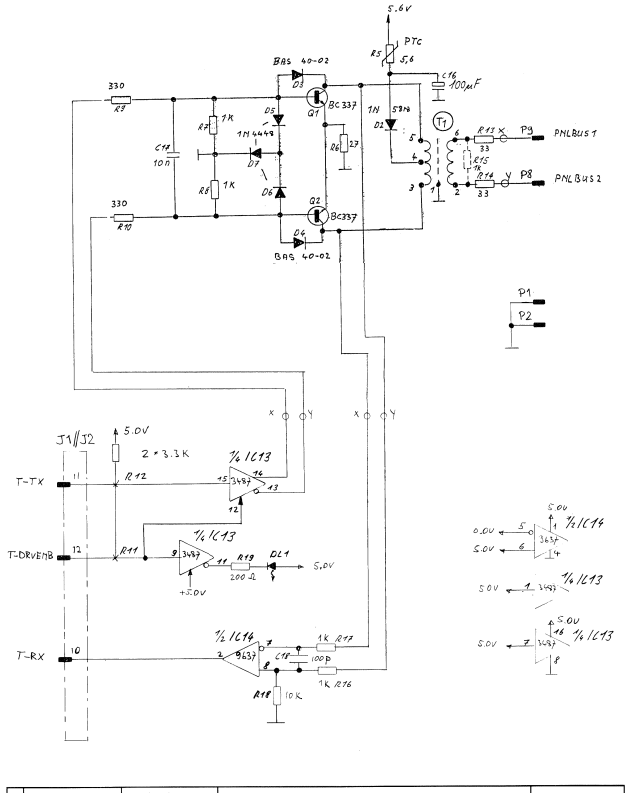

11.09.86				
STUDER	BASIS BOARD VU PANEL	SC	1.820.705-00	PAGE 2 OF 2

AUDIO REMOTE CONTROL 8CH 1.328.501.00
AUDIO REMOTE CONTROL 24CH 1.328.503.00
–BASIS BOARD VU PANEL 1.820.705.00

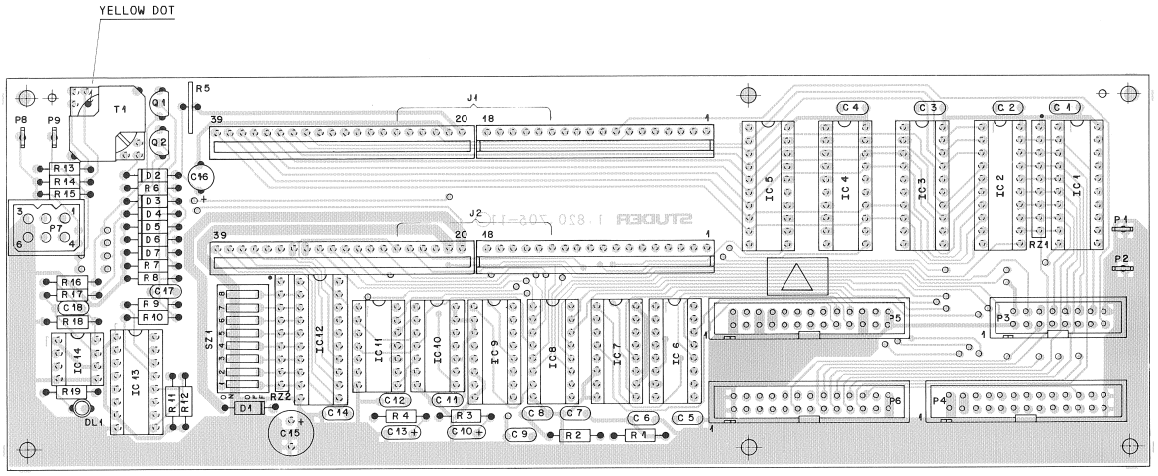

IND.	POS.NO.	PART NO.	VALUE	SPECIFICATIONS / EQUIVALENT	MANUF.
	IC....9	50.17.1123	74 HC 123		Mot.NS.Ph.RCA.SGS.To.TI
	IC....10	50.17.1011	74 HC 11		Mot.NS.Ph.RCA.SGS.To.TI
	IC....11	50.17.1004	74 HC 04		Mot.NS.Ph.RCA.SGS.To.TI
	IC....12	50.17.1541	74 HC 541		Mot.NS.Ph.RCA.SGS.To.TI
	IC....13	50.15.0105	MC 3487 P		Mot.NS
	IC....14	50.15.0114	UA9637ACP		Fc.TI
	J.....1			18 + 20 contacts, see note 1	
	J.....2			18 + 20 contacts, see note 1	
	P.....1	54.01.0320			
	P.....2	54.02.0320			
	P.....3	54.14.2002	16 cont.	see note 2	
	P.....4	54.14.2003	26 cont.	see note 3	
	P.....5	54.14.2003	26 cont.	see note 3	
	P.....6	54.14.2003	26 cont.	see note 3	
	P.....7			see note 4	
	P.....8	54.02.0320			
	P.....9	54.02.0320			
	Q.....1	50.03.0516	BC 337 E		Sie
	Q.....2	50.03.0516	BC 337 E		Sie
	R.....1	57.11.4103	10 kOhm	2%	
	R.....2	57.11.4103	10 kOhm	2%	
	R.....3	57.11.4104	100 kOhm	2%	
	R.....4	57.11.4104	100 kOhm	2%	
	R.....5	57.99.0209	9.6 Ohm	PTC Resistor, Philips nr. 2322 662 91009	
	R.....6	57.11.4270	27 Ohm	2%	
	R.....7	57.11.4102	1 kOhm	2%	
	R.....8	57.11.4102	1 kOhm	2%	
	R.....9	57.11.4331	330 Ohm	2%	
	R.....10	57.11.4331	330 Ohm	2%	
	R.....11	57.11.4332	3.3 kOhm	2%	
	R.....12	57.11.4332	3.3 kOhm	2%	
	R.....13	57.11.4330	33 Ohm	2%	
	R.....14	57.11.4330	33 Ohm	2%	

IND.	POS.NO.	PART NO.	VALUE	SPECIFICATIONS / EQUIVALENT	MANUF.
	R.....15	57.11.4102	1 kOhm	2%	
	R.....16	57.11.4102	1 kOhm	2%	
	R.....17	57.11.4102	1 kOhm	2%	
	R.....18	57.11.4103	10 kOhm	2%	
	R.....19	57.11.3201	200 Ohm	1%	
	RZ....1	57.88.4332		see note 5	
	RZ....2	57.88.4332		see note 5	
	SZ....1	15.01.0168		Switch array, AMP nr.435 166-5	
	T.....1	1.022.223.00		Studio Bus transformer	St

IND.	POS-NO-	PART NO.	VALUE	SPECIFICATIONS / EQUIVALENT	MANUF.
	C.....1	59.06.0683	68 nF	10%	
	C.....2	59.06.0683	68 nF	10%	
	C.....3	59.06.0683	68 nF	10%	
	C.....4	59.06.0683	68 nF	10%	
	C.....5	59.34.4271	270 pF	5%	
	C.....6	59.06.0683	68 nF	10%	
	C.....7	59.06.0683	68 nF	10%	
	C.....8	59.06.0683	68 nF	10%	
	C.....9	59.34.4271	270 pF	5%	
	C.....10	59.26.5225	2.2 uF	20%, 6.3V, Sal	
	C.....11	59.06.0683	68 nF	10%	
	C.....12	59.06.0683	68 nF	10%	
	C.....13	59.26.1330	33 uF	20%, 6.3V, Sal	
	C.....14	59.06.0683	68 nF	10%	
	C.....15	59.22.2221	220 uF	20%, 6.3V, El	
	C.....16	59.22.3101	100 uF	20%, 6.3V, El	
	C.....17	59.06.0103	10 nF	10%	
	C.....18	59.34.4101	100 pF	5%	
	D.....1	50.04.0512	1N 5818	1N 5819	Mot
	D.....2	50.04.0512	1N 5818	1N 5819	Mot
	D.....3	50.04.0121	BAT 42	BAT 85, BAS 40-02	Ph.Sie.Tho
	D.....4	50.04.0121	BAT 42	BAT 85, BAS 40-02	Ph.Sie.Tho
	D.....5	50.04.0125	1N 4448		Fc.ITT.Ph.Ses.Tf
	D.....6	50.04.0125	1N 4448		Fc.ITT.Ph.Ses.Tf
	D.....7	50.04.0125	1N 4448		Fc.ITT.Ph.Ses.Tf
	DL....1	50.04.2120	LS 3160-HL	Q 62103 - Q 1304	Sie
	IC....1	50.17.1541	74 HC 541		Mot.NS.Ph.RCA.SGS.To.TI
	IC....2	50.17.1573	74 HC 573		Mot.NS.Ph.RCA.SGS.To.TI
	IC....3	50.17.1374	74 HC 374		Mot.NS.Ph.RCA.SGS.To.TI
	IC....4	50.17.1374	74 HC 374		Mot.NS.Ph.RCA.SGS.To.TI
	IC....5	50.17.1573	74 HC 573		Mot.NS.Ph.RCA.SGS.To.TI
	IC....6	50.17.1138	74 HC 138		Mot.NS.Ph.RCA.SGS.To.TI
	IC....7	50.17.1123	74 HC 123		Mot.NS.Ph.RCA.SGS.To.TI
	IC....8	50.17.1138	74 HC 138		Mot.NS.Ph.RCA.SGS.To.TI

IND.	POS.NO.	PART NO.	VALUE	SPECIFICATIONS / EQUIVALENT	MANUF.
Note 1 - 2 connectors:					
	18 contacts.	Studer nr.		54.10.2015	
		Burndy nr.		GCSB 18 SD 19 V1 K9	
	20 contacts.	Studer nr.		54.10.2026	
		Burndy nr.		GCSB 20 SD V1 K9	
Note 2 - connector:		Yamaichi nr.		FAP-16-08-405S	
		Burndy nr.		BPH 9 B16 B00 GS	
		3M nr.		7616-6002 VZ	
Note 3 - connector:		Yamaichi nr.		FAP-26-08-405S	
		Burndy nr.		BPH 9 B26 B00 GS	
		3M nr.		7626-6002 VZ	
Note 4 - Molex plug:		Studer nr.		54.02.0418	
	with 6 pins:	Molex nr.		03-06-2061	
		Studer nr.		54.02.0406	
		Molex nr.		02-06-8103	
Note 5 - Network 8 * 3.3 kOhm, 5%, single line:		Allen Bradley nr.		909 A 332	
		Beckmann nr.		L - 09 - 1 - R 3.3 k	
		Bourns nr.		4609 M - 101 - 332	
		Dale nr.		CSC 09 A 01 - 332 G	
		Sprague nr.		256 C J 332 X2 PD	
		Tama nr.		MRG C 09 X 3.3 kOhm G	
		Vitrom nr.		F9E 3.3 kOhm 2%	
MANUFACTURER : Fc=Fairchild, ITT=Intermetall, Mot=Motorola, NS=National Semiconductors, Ph=Philips, RCA=RCA Corp. of America, Ses=Sescosem, SGS=SGS/Ates, Sie=Siemens, St=Studer, Tf=Telefunken, Tho=Thomsen CSF, TI=Texas Instruments, To=Toshiba.					
ORIG 86/09/11					

AUDIO REMOTE CONTROL 8CH 1.328.501.00
AUDIO REMOTE CONTROL 24CH 1.328.503.00
–MP UNIT VU PANEL 1.820.783.24

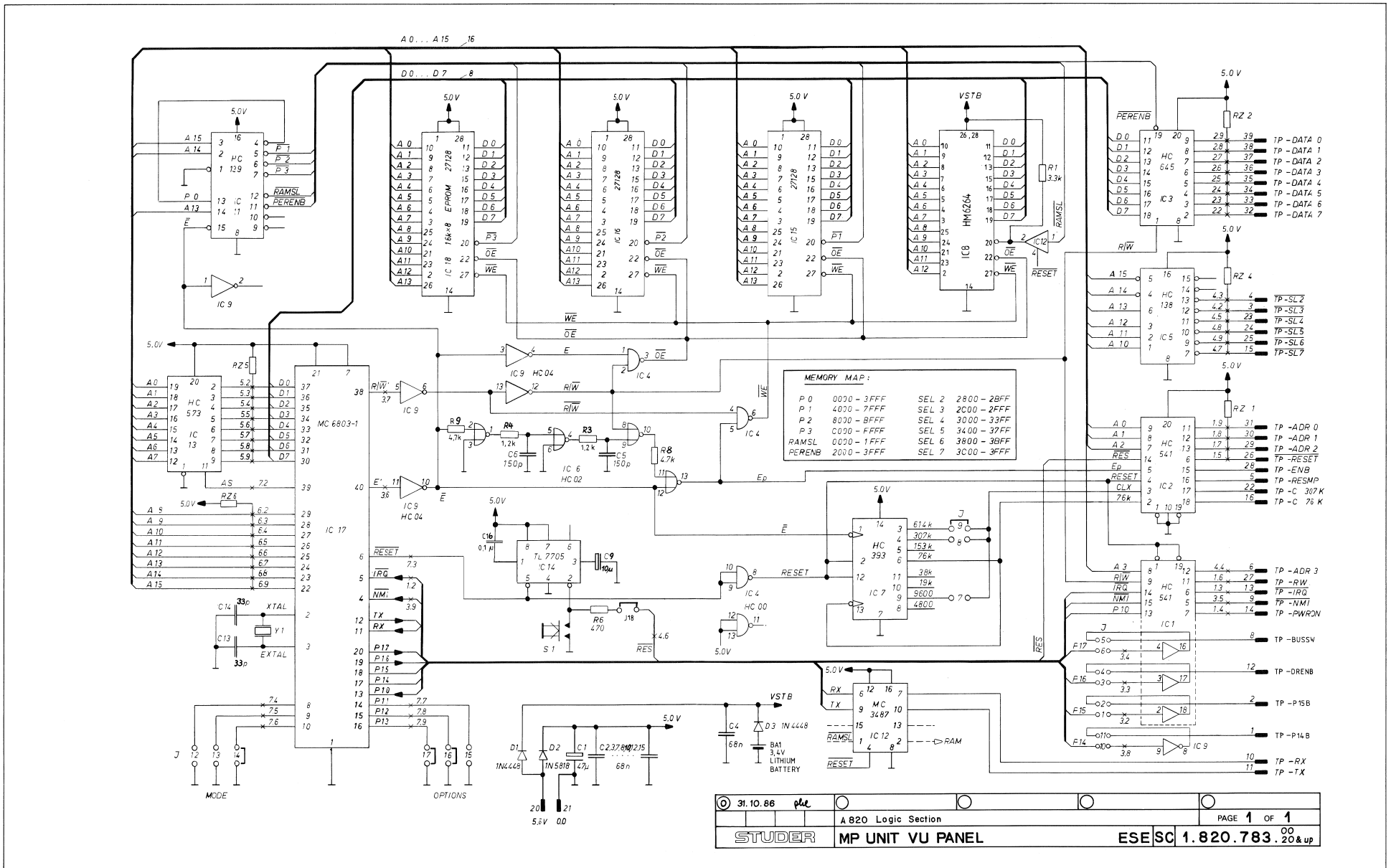

© 31.10.86 phe						PAGE 1 OF 1
	A 820 Logic Section					
STUDER	MP UNIT VU PANEL			ESE	SC	1.820.783.00 20 & up

AUDIO REMOTE CONTROL 8CH 1.328.501.00
AUDIO REMOTE CONTROL 24CH 1.328.503.00
–MP UNIT VU PANEL 1.820.783.24

COMPONENT SIDE
MP-UNIT VU PANEL 1.820.783-XX

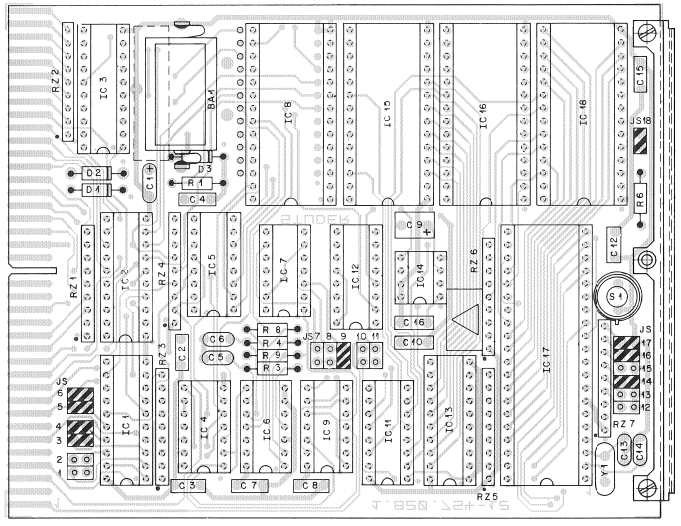

INSERTED:
JS 3,4,5,6,9,14
16,17,18

IND.	POS.NO.	PART NO.	VALUE	SPECIFICATIONS / EQUIVALENT	MANUF.
	BA....1	89.01.0275		Batt. Lith. 3.6V. 3 14.7825.5	
	C....1	59.26.0470	47 uF	20% 6.3V . Sal	Ph
	C....2	59.06.0683	68 nF	10% 63V . PETP	
	C....3	59.06.0683	68 nF	10% 63V . PETP	
	C....4	59.06.0683	68 nF	10% 63V . PETP	
	C....5	59.34.7151	150 pF	2% Ce	
	C....6	59.34.7151	150 pF	2% Ce	
	C....7	59.06.0683	68 nF	10% 63V . PETP	
	C....8	59.06.0683	68 nF	10% 63V . PETP	
	C....9	59.26.2100	10 uF	20% 16V . Sal	
	C....10	59.06.0683	68 nF	10% 63V . PeTP	
	C....11		not used		
	C....12	59.06.0683	68 nF	10% 63V . PETP	
	C....13	59.34.2330	33 pF	5% Ce	
	C....14	59.34.2330	33 pF	5% Ce	
	C....15	59.06.0683	68 nF	10% 63V . PETP	
	C....16	59.06.0104	100 nF	10% 63V . PETP	
	D....1	50.04.0125	1N 4448		Fc.ITT.Ph.Ses.Tf
	D....2	50.04.0512	1N 5818	1N 5819	Mot
	D....3	50.04.0125	1N 4448		Fc.ITT.Ph.Ses.Tf
	IC....1	50.17.1541	74 HC 541		Mot.NS.Ph.RCA.SGS.TI.To
	IC....2	50.17.1541	74 HC 541		Mot.NS.Ph.RCA.SGS.TI.To
	IC....3	50.17.1645	74 HC 645		Mot.NS.Ph.RCA.SGS.TI.To
	IC....4	50.17.1000	74 HC 00		Mot.NS.Ph.RCA.SGS.TI.To
	IC....5	50.17.1138	74 HC 138		Mot.NS.Ph.RCA.SGS.TI.To
	IC....6	50.17.1002	74 HC 02		Mot.NS.Ph.RCA.SGS.TI.To
	IC....7	50.17.1393	74 HC 393		Mot.NS.Ph.RCA.SGS.TI.To
	IC....8	50.14.0133	HM6264P-15	TC 5564-15	Hi.To
	IC....9	50.17.0004	74 HCT 04		Mot.NS.Ph.RCA.SGS.TI.To
	IC....10		not used		
	IC....11	50.17.1139	74 HC 139		Mot.NS.Ph.RCA.SGS.TI.To
	IC....12	50.15.0105	MC 3487 P	DS 3487 N	Mot.NS
	IC....13	50.17.1573	74 HC 573		Mot.NS.Ph.RCA.SGS.TI.To
	IC....14	50.11.0122	TL7705ACP		TI

IND.	POS.NO.	PART NO.	VALUE	SPECIFICATIONS / EQUIVALENT	MANUF.
	IC....15		not used		
	IC....16	50.14.0125	27128	HN 4827128G-30	Hi.It
	IC....17	50.16.0107	MC6803P-1	6803P-L	Mot.Hi
	IC....18	50.14.0125	27128	HN 4827128G-30	Hi.It
	JS....1			see note 2	
	JS....2			see note 2	
	JS....3			see note 2	
	JS....4			see note 2	
	JS....5			see note 2	
	JS....6			see note 2	
	JS....7			see note 2	
	JS....8			see note 2	
	JS....9			see note 2	
	JS....10			see note 2	
	JS....11			see note 2	
	JS....12			see note 2	
	JS....13			see note 2	
	JS....14			see note 2	
	JS....15			see note 2	
	JS....16			see note 2	
	JS....17			see note 2	
	JS....18			see note 2	
	MP....1	29.21.6002			
	MP....2	29.21.6002			
	R....1	57.11.4332	3.3 kOhm	2%	
	R....2		not used		
	R....3	57.11.4122	1.2 kOhm	2%	
	R....4	57.11.4122	1.2 kOhm	2%	
	R....5		not used		
	R....6	57.11.4471	470 Ohm	2%	
	R....7		not used		
	R....8	57.11.4472	4.7 kOhm	2%	
	R....9	57.11.4472	4.7 kOhm	2%	

IND.	POS.NO.	PART NO.	VALUE	SPECIFICATIONS / EQUIVALENT	MANUF.
	RZ....1	57.88.4332		see note 3	
	RZ....2	57.88.4332		see note 3	
	RZ....3	57.88.4332		see note 3	
	RZ....4	57.88.4332		see note 3	
	RZ....5	57.88.4332		see note 3	
	RZ....6	57.88.4332		see note 3	
	RZ....7	57.88.4332		see note 3	
	S....1	55.03.0122		Chicago Switch 34-350-001	
	Y....1	89.01.0560		4.9152 MHz, +-100 ppm	

Note 1 - IC15/16/18 : Software is delivered in a set only.

Note 2 - Contact pin:
Studer Nr. 54.01.0020
Berg Nr. 75 160-102-36
Philips Nr. 2422 025 89303
Bridge: Studer Nr. 54.01.0021
Berg Nr. 65 474-001
Philips Nr. 2422 024 88003

Note 3 - Network: 8 P. 3.3 kOhm, 5%
Siemens Nr. C09 x 3.3 k J
Ineltro Nr. R88 3.3 k 5%

Ce=Ceramic, Sal=Solid Aluminium, PETP=Polyesterfilm.

MANUFACTURER: Fc=Fairchild, Hi=Hitachi, ITT=Intermetall, Mot=Motorola,
NS=National Semiconductors, OK=OKI, Ph=Philips,
Ses=Sescosem, Tf=Telefunken,TI=Texas Instruments.

ORIG 86/10/31

AUDIO REMOTE CONTROL 8CH 1.328.501.00
AUDIO REMOTE CONTROL 24CH 1.328.503.00
–KEY BOARD 24CH ONLY 1.328.504.81

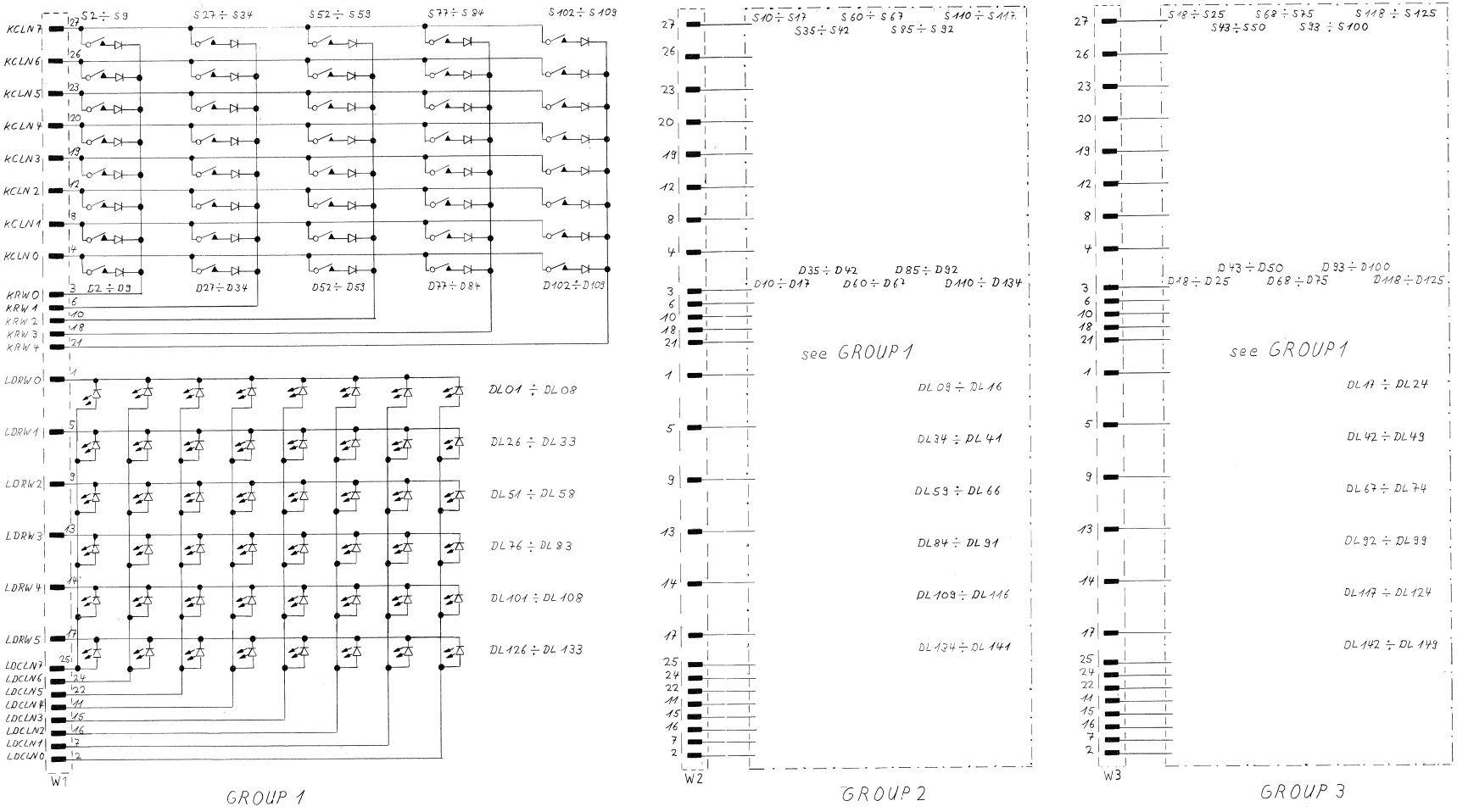

D1-D143:BAT 85
W1-W4 :Flat cable 40 conntacts

0 09.09.89 VF				
	A820 MCH			PAGE 1 OF 2
STUDER	KEY-BOARD 24CH			1,328,504-81

AUDIO REMOTE CONTROL 8CH 1.328.501.00
AUDIO REMOTE CONTROL 24CH 1.328.503.00
–KEY BOARD 24CH ONLY 1.328.504.81

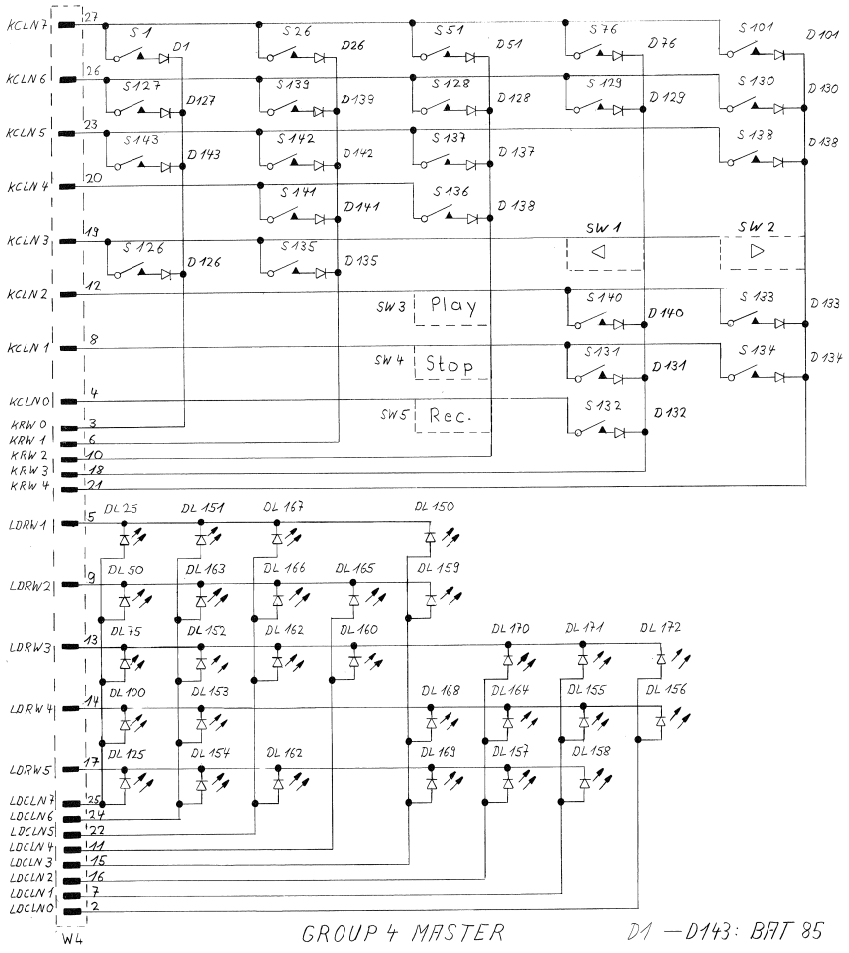

GROUP 4 MASTER

D1 – D143: BAT 85

△ Transport-Control-Section Switches
see KEY-BOARD DRIVER Manual

0 09.09.89 VF				
	A820 MCH			PAGE 2 OF 2
STUDER	KEY-BOARD 24CH			1,328,504-81

AUDIO REMOTE CONTROL 8CH 1.328.501.00
AUDIO REMOTE CONTROL 24CH 1.328.503.00
--KEY BOARD 8CH ONLY 1.328.510.81

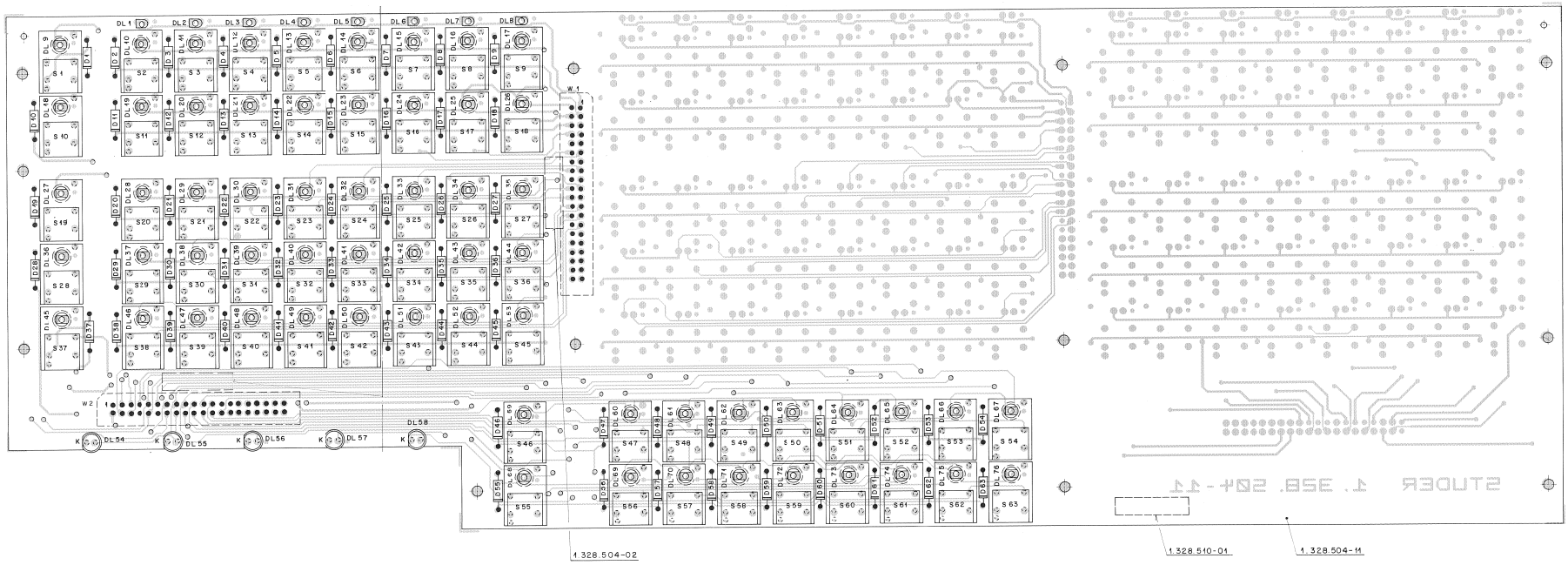

Verflachung beachten
K = Kathode

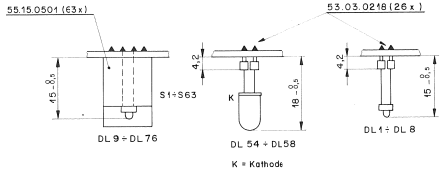

DL 9 ÷ DL 76 auf Anschlag mit Diodenhalter 1.328.230-09 einlöten

Freistehende Dioden senkrecht stecken

S1 ÷ S9 = 55.15.0515 (gn)
S10÷S18 / S46÷S63 = 55.15.0540 (sw)
S19 ÷ S27 = 55.15.0546 (bl)
S28÷S36 = 55.15.0543 (or)
S37÷S45 = 55.15.0519 (ws)

AUDIO REMOTE CONTROL 8CH 1.328.501.00
AUDIO REMOTE CONTROL 24CH 1.328.503.00
KEY BOARD 8CH ONLY 1.328.510.81

IND.	POS.NO.	PART NO.	VALUE	SPECIFICATIONS / EQUIVALENT	MANUF.
	D....01	50.04.0127	BAT 85	BAS 40-02	Ph,Sie
	D....02	50.04.0127	BAT 85	BAS 40-02	Ph,Sie
	D....03	50.04.0127	BAT 85	BAS 40-02	Ph,Sie
	D....04	50.04.0127	BAT 85	BAS 40-02	Ph,Sie
	D....05	50.04.0127	BAT 85	BAS 40-02	Ph,Sie
	D....06	50.04.0127	BAT 85	BAS 40-02	Ph,Sie
	D....07	50.04.0127	BAT 85	BAS 40-02	Ph,Sie
	D....08	50.04.0127	BAT 85	BAS 40-02	Ph,Sie
	D....09	50.04.0127	BAT 85	BAS 40-02	Ph,Sie
	D....10	50.04.0127	BAT 85	BAS 40-02	Ph,Sie
	D....11	50.04.0127	BAT 85	BAS 40-02	Ph,Sie
	D....12	50.04.0127	BAT 85	BAS 40-02	Ph,Sie
	D....13	50.04.0127	BAT 85	BAS 40-02	Ph,Sie
	D....14	50.04.0127	BAT 85	BAS 40-02	Ph,Sie
	D....15	50.04.0127	BAT 85	BAS 40-02	Ph,Sie
	D....16	50.04.0127	BAT 85	BAS 40-02	Ph,Sie
	D....17	50.04.0127	BAT 85	BAS 40-02	Ph,Sie
	D....18	50.04.0127	BAT 85	BAS 40-02	Ph,Sie
	D....19	50.04.0127	BAT 85	BAS 40-02	Ph,Sie
	D....20	50.04.0127	BAT 85	BAS 40-02	Ph,Sie
	D....21	50.04.0127	BAT 85	BAS 40-02	Ph,Sie
	D....22	50.04.0127	BAT 85	BAS 40-02	Ph,Sie
	D....23	50.04.0127	BAT 85	BAS 40-02	Ph,Sie
	D....24	50.04.0127	BAT 85	BAS 40-02	Ph,Sie
	D....25	50.04.0127	BAT 85	BAS 40-02	Ph,Sie
	D....26	50.04.0127	BAT 85	BAS 40-02	Ph,Sie
	D....27	50.04.0127	BAT 85	BAS 40-02	Ph,Sie
	D....28	50.04.0127	BAT 85	BAS 40-02	Ph,Sie
	D....29	50.04.0127	BAT 85	BAS 40-02	Ph,Sie
	D....30	50.04.0127	BAT 85	BAS 40-02	Ph,Sie
	D....31	50.04.0127	BAT 85	BAS 40-02	Ph,Sie
	D....32	50.04.0127	BAT 85	BAS 40-02	Ph,Sie
	D....33	50.04.0127	BAT 85	BAS 40-02	Ph,Sie
	D....34	50.04.0127	BAT 85	BAS 40-02	Ph,Sie
	D....35	50.04.0127	BAT 85	BAS 40-02	Ph,Sie
	D....36	50.04.0127	BAT 85	BAS 40-02	Ph,Sie
	D....37	50.04.0127	BAT 85	BAS 40-02	Ph,Sie

IND.	POS.NO.	PART NO.	VALUE	SPECIFICATIONS / EQUIVALENT	MANUF.
	D....38	50.04.0127	BAT 85	BAS 40-02	Ph,Sie
	D....39	50.04.0127	BAT 85	BAS 40-02	Ph,Sie
	D....40	50.04.0127	BAT 85	BAS 40-02	Ph,Sie
	D....41	50.04.0127	BAT 85	BAS 40-02	Ph,Sie
	D....42	50.04.0127	BAT 85	BAS 40-02	Ph,Sie
	D....43	50.04.0127	BAT 85	BAS 40-02	Ph,Sie
	D....44	50.04.0127	BAT 85	BAS 40-02	Ph,Sie
	D....45	50.04.0127	BAT 85	BAS 40-02	Ph,Sie
	D....46	50.04.0127	BAT 85	BAS 40-02	Ph,Sie
	D....47	50.04.0127	BAT 85	BAS 40-02	Ph,Sie
	D....48	50.04.0127	BAT 85	BAS 40-02	Ph,Sie
	D....49	50.04.0127	BAT 85	BAS 40-02	Ph,Sie
	D....50	50.04.0127	BAT 85	BAS 40-02	Ph,Sie
	D....51	50.04.0127	BAT 85	BAS 40-02	Ph,Sie
	D....52	50.04.0127	BAT 85	BAS 40-02	Ph,Sie
	D....53	50.04.0127	BAT 85	BAS 40-02	Ph,Sie
	D....54	50.04.0127	BAT 85	BAS 40-02	Ph,Sie
	D....55	50.04.0127	BAT 85	BAS 40-02	Ph,Sie
	D....56	50.04.0127	BAT 85	BAS 40-02	Ph,Sie
	D....57	50.04.0127	BAT 85	BAS 40-02	Ph,Sie
	D....58	50.04.0127	BAT 85	BAS 40-02	Ph,Sie
	D....59	50.04.0127	BAT 85	BAS 40-02	Ph,Sie
	D....60	50.04.0127	BAT 85	BAS 40-02	Ph,Sie
	D....61	50.04.0127	BAT 85	BAS 40-02	Ph,Sie
	D....62	50.04.0127	BAT 85	BAS 40-02	Ph,Sie
	D....63	50.04.0127	BAT 85	BAS 40-02	Ph,Sie
	DL...1	50.04.2121	TLUR 2400		Tf
	DL...2	50.04.2121	TLUR 2400		Tf
	DL...3	50.04.2121	TLUR 2400		Tf
	DL...4	50.04.2121	TLUR 2400		Tf
	DL...5	50.04.2121	TLUR 2400		Tf
	DL...6	50.04.2121	TLUR 2400		Tf
	DL...7	50.04.2121	TLUR 2400		Tf
	DL...8	50.04.2121	TLUR 2400		Tf
	DL...9	50.04.2132	TLUG 2400		Tf
	DL...10	50.04.2132	TLUG 2400		Tf

IND.	POS.NO.	PART NO.	VALUE	SPECIFICATIONS / EQUIVALENT	MANUF.
	DL...11	50.04.2132	TLUG 2400		Tf
	DL...12	50.04.2132	TLUG 2400		Tf
	DL...13	50.04.2132	TLUG 2400		Tf
	DL...14	50.04.2132	TLUG 2400		Tf
	DL...15	50.04.2132	TLUG 2400		Tf
	DL...16	50.04.2132	TLUG 2400		Tf
	DL...17	50.04.2132	TLUG 2400		Tf
	DL...18	50.04.2133	CQY 75 N		Tf
	DL...19	50.04.2133	CQY 75 N		Tf
	DL...20	50.04.2133	CQY 75 N		Tf
	DL...21	50.04.2133	CQY 75 N		Tf
	DL...22	50.04.2133	CQY 75 N		Tf
	DL...23	50.04.2133	CQY 75 N		Tf
	DL...24	50.04.2133	CQY 75 N		Tf
	DL...25	50.04.2133	CQY 75 N		Tf
	DL...26	50.04.2133	CQY 75 N		Tf
	DL...27	50.04.2133	CQY 75 N		Tf
	DL...28	50.04.2133	CQY 75 N		Tf
	DL...29	50.04.2133	CQY 75 N		Tf
	DL...30	50.04.2133	CQY 75 N		Tf
	DL...31	50.04.2133	CQY 75 N		Tf
	DL...32	50.04.2133	CQY 75 N		Tf
	DL...33	50.04.2133	CQY 75 N		Tf
	DL...34	50.04.2133	CQY 75 N		Tf
	DL...35	50.04.2133	CQY 75 N		Tf
	DL...36	50.04.2133	CQY 75 N		Tf
	DL...37	50.04.2133	CQY 75 N		Tf
	DL...38	50.04.2133	CQY 75 N		Tf
	DL...39	50.04.2133	CQY 75 N		Tf
	DL...40	50.04.2133	CQY 75 N		Tf
	DL...41	50.04.2133	CQY 75 N		Tf
	DL...42	50.04.2133	CQY 75 N		Tf
	DL...43	50.04.2133	CQY 75 N		Tf
	DL...44	50.04.2133	CQY 75 N		Tf
	DL...45	50.04.2133	CQY 75 N		Tf
	DL...46	50.04.2133	CQY 75 N		Tf
	DL...47	50.04.2133	CQY 75 N		Tf

IND.	POS.NO.	PART NO.	VALUE	SPECIFICATIONS / EQUIVALENT	MANUF.
	DL...48	50.04.2133	CQY 75 N		Tf
	DL...49	50.04.2133	CQY 75 N		Tf
	DL...50	50.04.2133	CQY 75 N		Tf
	DL...51	50.04.2133	CQY 75 N		Tf
	DL...52	50.04.2133	CQY 75 N		Tf
	DL...53	50.04.2133	CQY 75 N		Tf
	DL...54	50.04.2112	MV 5353	CM 4-584 B; HLMF 3401	CM,GI,HP
	DL...55	50.04.2112	MV 5353	CM 4-584 B; HLMF 3401	CM,GI,HP
	DL...56	50.04.2112	MV 5353	CM 4-584 B; HLMF 3401	CM,GI,HP
	DL...57	50.04.2112	MV 5353	CM 4-584 B; HLMF 3401	CM,GI,HP
	DL...58	50.04.2111	MV 5753	CM 4-284 B; HLMF 3301	CM,GI,HP
	DL...59	50.04.2133	CQY 75 N		Tf
	DL...60	50.04.2133	CQY 75 N		Tf
	DL...61	50.04.2133	CQY 75 N		Tf
	DL...62	50.04.2133	CQY 75 N		Tf
	DL...63	50.04.2133	CQY 75 N		Tf
	DL...64	50.04.2133	CQY 75 N		Tf
	DL...65	50.04.2133	CQY 75 N		Tf
	DL...66	50.04.2133	CQY 75 N		Tf
	DL...67	50.04.2133	CQY 75 N		Tf
	DL...68	50.04.2133	CQY 75 N		Tf
	DL...69	50.04.2133	CQY 75 N		Tf
	DL...70	50.04.2133	CQY 75 N		Tf
	DL...71	50.04.2133	CQY 75 N		Tf
	DL...72	50.04.2133	CQY 75 N		Tf
	DL...73	50.04.2133	CQY 75 N		Tf
	DL...74	50.04.2133	CQY 75 N		Tf
	DL...75	50.04.2133	CQY 75 N		Tf
	DL...76	50.04.2133	CQY 75 N		Tf
	S....1	55.15.0501		Button nr. 55.15.0515	Schadow
	S....2	55.15.0501		Button nr. 55.15.0515	Schadow
	S....3	55.15.0501		Button nr. 55.15.0515	Schadow
	S....4	55.15.0501		Button nr. 55.15.0515	Schadow
	S....5	55.15.0501		Button nr. 55.15.0515	Schadow
	S....6	55.15.0501		Button nr. 55.15.0515	Schadow
	S....7	55.15.0501		Button nr. 55.15.0515	Schadow

IND.	POS.NO.	PART NO.	VALUE	SPECIFICATIONS / EQUIVALENT	MANUF.
	S....8	55.15.0501		Button nr. 55.15.0515	Schadow
	S....9	55.15.0501		Button nr. 55.15.0515	Schadow
	S....10	55.15.0501		Button nr. 55.15.0510	Schadow
	S....11	55.15.0501		Button nr. 55.15.0510	Schadow
	S....12	55.15.0501		Button nr. 55.15.0510	Schadow
	S....13	55.15.0501		Button nr. 55.15.0510	Schadow
	S....14	55.15.0501		Button nr. 55.15.0510	Schadow
	S....15	55.15.0501		Button nr. 55.15.0510	Schadow
	S....16	55.15.0501		Button nr. 55.15.0510	Schadow
	S....17	55.15.0501		Button nr. 55.15.0510	Schadow
	S....18	55.15.0501		Button nr. 55.15.0510	Schadow
	S....19	55.15.0501		Button nr. 55.15.0516	Schadow
	S....20	55.15.0501		Button nr. 55.15.0516	Schadow
	S....21	55.15.0501		Button nr. 55.15.0516	Schadow
	S....22	55.15.0501		Button nr. 55.15.0516	Schadow
	S....23	55.15.0501		Button nr. 55.15.0516	Schadow
	S....24	55.15.0501		Button nr. 55.15.0516	Schadow
	S....25	55.15.0501		Button nr. 55.15.0516	Schadow
	S....26	55.15.0501		Button nr. 55.15.0516	Schadow
	S....27	55.15.0501		Button nr. 55.15.0516	Schadow
	S....28	55.15.0501		Button nr. 55.15.0513	Schadow
	S....29	55.15.0501		Button nr. 55.15.0513	Schadow
	S....30	55.15.0501		Button nr. 55.15.0513	Schadow
	S....31	55.15.0501		Button nr. 55.15.0513	Schadow
	S....32	55.15.0501		Button nr. 55.15.0513	Schadow
	S....33	55.15.0501		Button nr. 55.15.0513	Schadow
	S....34	55.15.0501		Button nr. 55.15.0513	Schadow
	S....35	55.15.0501		Button nr. 55.15.0513	Schadow
	S....36	55.15.0501		Button nr. 55.15.0513	Schadow
	S....37	55.15.0501		Button nr. 55.15.0519	Schadow
	S....38	55.15.0501		Button nr. 55.15.0519	Schadow
	S....39	55.15.0501		Button nr. 55.15.0519	Schadow
	S....40	55.15.0501		Button nr. 55.15.0519	Schadow
	S....41	55.15.0501		Button nr. 55.15.0519	Schadow
	S....42	55.15.0501		Button nr. 55.15.0519	Schadow
	S....43	55.15.0501		Button nr. 55.15.0519	Schadow
	S....44	55.15.0501		Button nr. 55.15.0519	Schadow

IND.	POS.NO.	PART NO.	VALUE	SPECIFICATIONS / EQUIVALENT	MANUF.
	S....45	55.15.0501		Button nr. 55.15.0519	Schadow
	S....46	55.15.0501		Button nr. 55.15.0510	Schadow
	S....47	55.15.0501		Button nr. 55.15.0510	Schadow
	S....48	55.15.0501		Button nr. 55.15.0510	Schadow
	S....49	55.15.0501		Button nr. 55.15.0510	Schadow
	S....50	55.15.0501		Button nr. 55.15.0510	Schadow
	S....51	55.15.0501		Button nr. 55.15.0510	Schadow
	S....52	55.15.0501		Button nr. 55.15.0510	Schadow
	S....53	55.15.0501		Button nr. 55.15.0510	Schadow
	S....54	55.15.0501		Button nr. 55.15.0510	Schadow
	S....55	55.15.0501		Button nr. 55.15.0510	Schadow
	S....56	55.15.0501		Button nr. 55.15.0510	Schadow
	S....57	55.15.0501		Button nr. 55.15.0510	Schadow
	S....58	55.15.0501		Button nr. 55.15.0510	Schadow
	S....59	55.15.0501		Button nr. 55.15.0510	Schadow
	S....60	55.15.0501		Button nr. 55.15.0510	Schadow
	S....61	55.15.0501		Button nr. 55.15.0510	Schadow
	S....62	55.15.0501		Button nr. 55.15.0510	Schadow
	S....63	55.15.0501		Button nr. 55.15.0510	Schadow
	W....1	1.023.114.01	Cable	40 conntacts, flat cable	
	W....2	1.023.114.01	Cable	40 conntacts, flat cable	

MANUFACTUERERS: CM=Chicaco Miniatur, GI=General Instruments,
HP=Hewlett Packard, Ph=Philips, Tf=Telefunken
Sie=Siemens

ORIG 89/09/09

AUDIO REMOTE CONTROL 8CH 1.328.501.00
AUDIO REMOTE CONTROL 24CH 1.328.503.00
–KEY BOARD 24CH ONLY 1.328.504.81

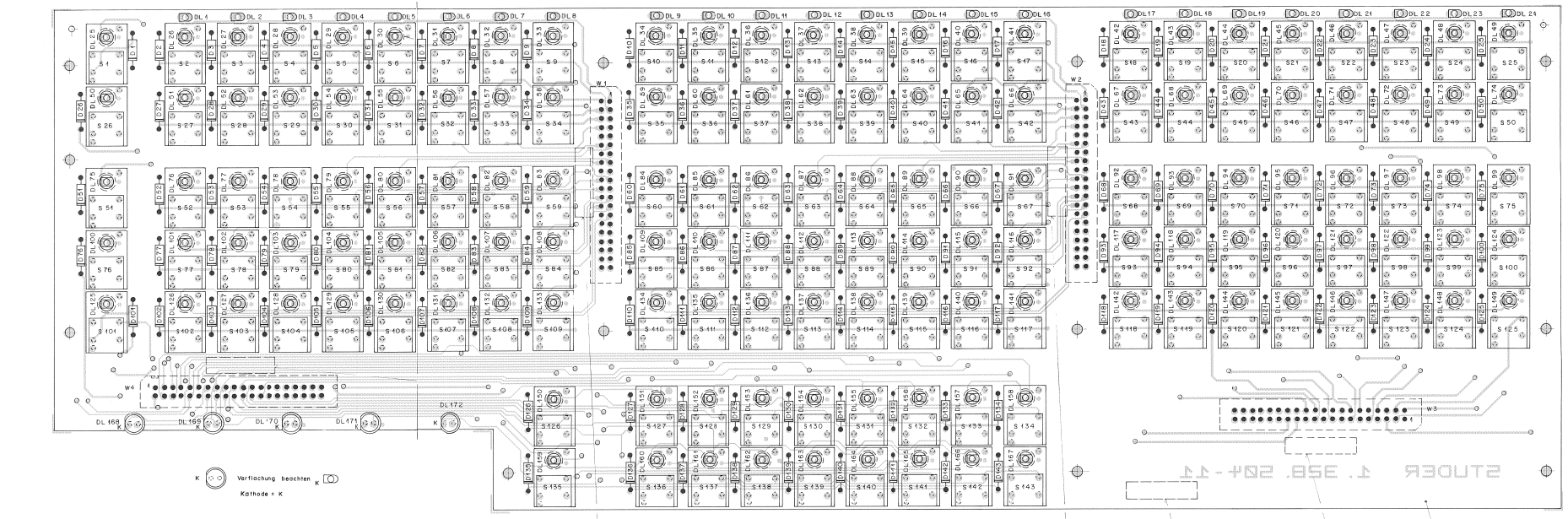

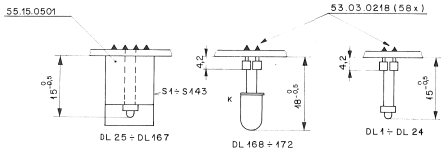

DL 25÷DL 167 auf Anschlag mit Diodenhalter 1.328.230-09 einlöten

Freistehende Dioden senkrecht stecken

S1÷S25 = 55.15.0515 (gn)
S26÷S50 } = 55.15.0510 (sw)
S126÷S143 }
S51÷S75 = 55.15.0516 (bl)
S76÷S100 = 55.15.0513 (or)
S101÷S125 = 55.15.0549 (ws)

IND.	POS.NO.	PART NO.	VALUE	SPECIFICATIONS / EQUIVALENT	MANUF.
	D....01	50.04.0127	BAT 85	BAS 40-02	Ph,Sie
	D....02	50.04.0127	BAT 85	BAS 40-02	Ph,Sie
	D....03	50.04.0127	BAT 85	BAS 40-02	Ph,Sie
	D....04	50.04.0127	BAT 85	BAS 40-02	Ph,Sie
	D....05	50.04.0127	BAT 85	BAS 40-02	Ph,Sie
	D....06	50.04.0127	BAT 85	BAS 40-02	Ph,Sie
	D....07	50.04.0127	BAT 85	BAS 40-02	Ph,Sie
	D....08	50.04.0127	BAT 85	BAS 40-02	Ph,Sie
	D....09	50.04.0127	BAT 85	BAS 40-02	Ph,Sie
	D....10	50.04.0127	BAT 85	BAS 40-02	Ph,Sie
	D....11	50.04.0127	BAT 85	BAS 40-02	Ph,Sie
	D....12	50.04.0127	BAT 85	BAS 40-02	Ph,Sie
	D....13	50.04.0127	BAT 85	BAS 40-02	Ph,Sie
	D....14	50.04.0127	BAT 85	BAS 40-02	Ph,Sie
	D....15	50.04.0127	BAT 85	BAS 40-02	Ph,Sie
	D....16	50.04.0127	BAT 85	BAS 40-02	Ph,Sie
	D....17	50.04.0127	BAT 85	BAS 40-02	Ph,Sie
	D....18	50.04.0127	BAT 85	BAS 40-02	Ph,Sie
	D....19	50.04.0127	BAT 85	BAS 40-02	Ph,Sie
	D....20	50.04.0127	BAT 85	BAS 40-02	Ph,Sie
	D....21	50.04.0127	BAT 85	BAS 40-02	Ph,Sie
	D....22	50.04.0127	BAT 85	BAS 40-02	Ph,Sie
	D....23	50.04.0127	BAT 85	BAS 40-02	Ph,Sie
	D....24	50.04.0127	BAT 85	BAS 40-02	Ph,Sie
	D....25	50.04.0127	BAT 85	BAS 40-02	Ph,Sie
	D....26	50.04.0127	BAT 85	BAS 40-02	Ph,Sie
	D....27	50.04.0127	BAT 85	BAS 40-02	Ph,Sie
	D....28	50.04.0127	BAT 85	BAS 40-02	Ph,Sie
	D....29	50.04.0127	BAT 85	BAS 40-02	Ph,Sie
	D....30	50.04.0127	BAT 85	BAS 40-02	Ph,Sie
	D....31	50.04.0127	BAT 85	BAS 40-02	Ph,Sie
	D....32	50.04.0127	BAT 85	BAS 40-02	Ph,Sie
	D....33	50.04.0127	BAT 85	BAS 40-02	Ph,Sie
	D....34	50.04.0127	BAT 85	BAS 40-02	Ph,Sie
	D....35	50.04.0127	BAT 85	BAS 40-02	Ph,Sie
	D....36	50.04.0127	BAT 85	BAS 40-02	Ph,Sie
	D....37	50.04.0127	BAT 85	BAS 40-02	Ph,Sie

STUDER (00) 89/09/09 VF KEY BOARD 24 CH PL 1.328.504.81 PAGE 1

IND.	POS.NO.	PART NO.	VALUE	SPECIFICATIONS / EQUIVALENT	MANUF.
	D....38	50.04.0127	BAT 85	BAS 40-02	Ph,Sie
	D....39	50.04.0127	BAT 85	BAS 40-02	Ph,Sie
	D....40	50.04.0127	BAT 85	BAS 40-02	Ph,Sie
	D....41	50.04.0127	BAT 85	BAS 40-02	Ph,Sie
	D....42	50.04.0127	BAT 85	BAS 40-02	Ph,Sie
	D....43	50.04.0127	BAT 85	BAS 40-02	Ph,Sie
	D....44	50.04.0127	BAT 85	BAS 40-02	Ph,Sie
	D....45	50.04.0127	BAT 85	BAS 40-02	Ph,Sie
	D....46	50.04.0127	BAT 85	BAS 40-02	Ph,Sie
	D....47	50.04.0127	BAT 85	BAS 40-02	Ph,Sie
	D....48	50.04.0127	BAT 85	BAS 40-02	Ph,Sie
	D....49	50.04.0127	BAT 85	BAS 40-02	Ph,Sie
	D....50	50.04.0127	BAT 85	BAS 40-02	Ph,Sie
	D....51	50.04.0127	BAT 85	BAS 40-02	Ph,Sie
	D....52	50.04.0127	BAT 85	BAS 40-02	Ph,Sie
	D....53	50.04.0127	BAT 85	BAS 40-02	Ph,Sie
	D....54	50.04.0127	BAT 85	BAS 40-02	Ph,Sie
	D....55	50.04.0127	BAT 85	BAS 40-02	Ph,Sie
	D....56	50.04.0127	BAT 85	BAS 40-02	Ph,Sie
	D....57	50.04.0127	BAT 85	BAS 40-02	Ph,Sie
	D....58	50.04.0127	BAT 85	BAS 40-02	Ph,Sie
	D....59	50.04.0127	BAT 85	BAS 40-02	Ph,Sie
	D....60	50.04.0127	BAT 85	BAS 40-02	Ph,Sie
	D....61	50.04.0127	BAT 85	BAS 40-02	Ph,Sie
	D....62	50.04.0127	BAT 85	BAS 40-02	Ph,Sie
	D....63	50.04.0127	BAT 85	BAS 40-02	Ph,Sie
	D....64	50.04.0127	BAT 85	BAS 40-02	Ph,Sie
	D....65	50.04.0127	BAT 85	BAS 40-02	Ph,Sie
	D....66	50.04.0127	BAT 85	BAS 40-02	Ph,Sie
	D....67	50.04.0127	BAT 85	BAS 40-02	Ph,Sie
	D....68	50.04.0127	BAT 85	BAS 40-02	Ph,Sie
	D....69	50.04.0127	BAT 85	BAS 40-02	Ph,Sie
	D....70	50.04.0127	BAT 85	BAS 40-02	Ph,Sie
	D....71	50.04.0127	BAT 85	BAS 40-02	Ph,Sie
	D....72	50.04.0127	BAT 85	BAS 40-02	Ph,Sie
	D....73	50.04.0127	BAT 85	BAS 40-02	Ph,Sie
	D....74	50.04.0127	BAT 85	BAS 40-02	Ph,Sie

STUDER (00) 89/09/09 VF KEY BOARD 24 CH PL 1.328.504.81 PAGE 2

IND.	POS.NO.	PART NO.	VALUE	SPECIFICATIONS / EQUIVALENT	MANUF.
	D....75	50.04.0127	BAT 85	BAS 40-02	Ph,Sie
	D....76	50.04.0127	BAT 85	BAS 40-02	Ph,Sie
	D....77	50.04.0127	BAT 85	BAS 40-02	Ph,Sie
	D....78	50.04.0127	BAT 85	BAS 40-02	Ph,Sie
	D....79	50.04.0127	BAT 85	BAS 40-02	Ph,Sie
	D....80	50.04.0127	BAT 85	BAS 40-02	Ph,Sie
	D....81	50.04.0127	BAT 85	BAS 40-02	Ph,Sie
	D....82	50.04.0127	BAT 85	BAS 40-02	Ph,Sie
	D....83	50.04.0127	BAT 85	BAS 40-02	Ph,Sie
	D....84	50.04.0127	BAT 85	BAS 40-02	Ph,Sie
	D....85	50.04.0127	BAT 85	BAS 40-02	Ph,Sie
	D....86	50.04.0127	BAT 85	BAS 40-02	Ph,Sie
	D....87	50.04.0127	BAT 85	BAS 40-02	Ph,Sie
	D....88	50.04.0127	BAT 85	BAS 40-02	Ph,Sie
	D....89	50.04.0127	BAT 85	BAS 40-02	Ph,Sie
	D....90	50.04.0127	BAT 85	BAS 40-02	Ph,Sie
	D....91	50.04.0127	BAT 85	BAS 40-02	Ph,Sie
	D....92	50.04.0127	BAT 85	BAS 40-02	Ph,Sie
	D....93	50.04.0127	BAT 85	BAS 40-02	Ph,Sie
	D....94	50.04.0127	BAT 85	BAS 40-02	Ph,Sie
	D....95	50.04.0127	BAT 85	BAS 40-02	Ph,Sie
	D....96	50.04.0127	BAT 85	BAS 40-02	Ph,Sie
	D....97	50.04.0127	BAT 85	BAS 40-02	Ph,Sie
	D....98	50.04.0127	BAT 85	BAS 40-02	Ph,Sie
	D....99	50.04.0127	BAT 85	BAS 40-02	Ph,Sie
	D...100	50.04.0127	BAT 85	BAS 40-02	Ph,Sie
	D...101	50.04.0127	BAT 85	BAS 40-02	Ph,Sie
	D...102	50.04.0127	BAT 85	BAS 40-02	Ph,Sie
	D...103	50.04.0127	BAT 85	BAS 40-02	Ph,Sie
	D...104	50.04.0127	BAT 85	BAS 40-02	Ph,Sie
	D...105	50.04.0127	BAT 85	BAS 40-02	Ph,Sie
	D...106	50.04.0127	BAT 85	BAS 40-02	Ph,Sie
	D...107	50.04.0127	BAT 85	BAS 40-02	Ph,Sie
	D...108	50.04.0127	BAT 85	BAS 40-02	Ph,Sie
	D...109	50.04.0127	BAT 85	BAS 40-02	Ph,Sie
	D...110	50.04.0127	BAT 85	BAS 40-02	Ph,Sie
	D...111	50.04.0127	BAT 85	BAS 40-02	Ph,Sie

STUDER (00) 89/09/09 VF KEY BOARD 24 CH PL 1.328.504.81 PAGE 3

AUDIO REMOTE CONTROL 8CH 1.328.501.00
AUDIO REMOTE CONTROL 24CH 1.328.503.00
–KEY BOARD 24CH ONLY 1.328.504.81

IND.	POS.NO.	PART NO.	VALUE	SPECIFICATIONS / EQUIVALENT	MANUF.
	D...112	50.04.0127	BAT 85	BAS 40-02	Ph/Si*
	D...113	50.04.0127	BAT 85	BAS 40-02	Ph/Si*
	D...114	50.04.0127	BAT 85	BAS 40-02	Ph/Si*
	D...115	50.04.0127	BAT 85	BAS 40-02	Ph/Si*
	D...116	50.04.0127	BAT 85	BAS 40-02	Ph/Si*
	D...117	50.04.0127	BAT 85	BAS 40-02	Ph/Si*
	D...118	50.04.0127	BAT 85	BAS 40-02	Ph/Si*
	D...119	50.04.0127	BAT 85	BAS 40-02	Ph/Si*
	D...120	50.04.0127	BAT 85	BAS 40-02	Ph/Si*
	D...121	50.04.0127	BAT 85	BAS 40-02	Ph/Si*
	D...122	50.04.0127	BAT 85	BAS 40-02	Ph/Si*
	D...123	50.04.0127	BAT 85	BAS 40-02	Ph/Si*
	D...124	50.04.0127	BAT 85	BAS 40-02	Ph/Si*
	D...125	50.04.0127	BAT 85	BAS 40-02	Ph/Si*
	D...126	50.04.0127	BAT 85	BAS 40-02	Ph/Si*
	D...127	50.04.0127	BAT 85	BAS 40-02	Ph/Si*
	D...128	50.04.0127	BAT 85	BAS 40-02	Ph/Si*
	D...129	50.04.0127	BAT 85	BAS 40-02	Ph/Si*
	D...130	50.04.0127	BAT 85	BAS 40-02	Ph/Si*
	D...131	50.04.0127	BAT 85	BAS 40-02	Ph/Si*
	D...132	50.04.0127	BAT 85	BAS 40-02	Ph/Si*
	D...133	50.04.0127	BAT 85	BAS 40-02	Ph/Si*
	D...134	50.04.0127	BAT 85	BAS 40-02	Ph/Si*
	D...135	50.04.0127	BAT 85	BAS 40-02	Ph/Si*
	D...136	50.04.0127	BAT 85	BAS 40-02	Ph/Si*
	D...137	50.04.0127	BAT 85	BAS 40-02	Ph/Si*
	D...138	50.04.0127	BAT 85	BAS 40-02	Ph/Si*
	D...139	50.04.0127	BAT 85	BAS 40-02	Ph/Si*
	D...140	50.04.0127	BAT 85	BAS 40-02	Ph/Si*
	D...141	50.04.0127	BAT 85	BAS 40-02	Ph/Si*
	D...142	50.04.0127	BAT 85	BAS 40-02	Ph/Si*
	D...143	50.04.0127	BAT 85	BAS 40-02	Ph/Si*
	DL...1	50.04.2121	TLUR 2400		Tf
	DL...2	50.04.2121	TLUR 2400		Tf
	DL...3	50.04.2121	TLUR 2400		Tf
	DL...4	50.04.2121	TLUR 2400		Tf

IND.	POS.NO.	PART NO.	VALUE	SPECIFICATIONS / EQUIVALENT	MANUF.
	DL...5	50.04.2121	TLUR 2400		Tf
	DL...6	50.04.2121	TLUR 2400		Tf
	DL...7	50.04.2121	TLUR 2400		Tf
	DL...8	50.04.2121	TLUR 2400		Tf
	DL...9	50.04.2121	TLUR 2400		Tf
	DL...10	50.04.2121	TLUR 2400		Tf
	DL...11	50.04.2121	TLUR 2400		Tf
	DL...12	50.04.2121	TLUR 2400		Tf
	DL...13	50.04.2121	TLUR 2400		Tf
	DL...14	50.04.2121	TLUR 2400		Tf
	DL...15	50.04.2121	TLUR 2400		Tf
	DL...16	50.04.2121	TLUR 2400		Tf
	DL...17	50.04.2121	TLUR 2400		Tf
	DL...18	50.04.2121	TLUR 2400		Tf
	DL...19	50.04.2121	TLUR 2400		Tf
	DL...20	50.04.2121	TLUR 2400		Tf
	DL...21	50.04.2121	TLUR 2400		Tf
	DL...22	50.04.2121	TLUR 2400		Tf
	DL...23	50.04.2121	TLUR 2400		Tf
	DL...24	50.04.2121	TLUR 2400		Tf
	DL...25	50.04.2132	TLUG 2400		Tf
	DL...26	50.04.2132	TLUG 2400		Tf
	DL...27	50.04.2132	TLUG 2400		Tf
	DL...28	50.04.2132	TLUG 2400		Tf
	DL...29	50.04.2132	TLUG 2400		Tf
	DL...30	50.04.2132	TLUG 2400		Tf
	DL...31	50.04.2132	TLUG 2400		Tf
	DL...32	50.04.2132	TLUG 2400		Tf
	DL...33	50.04.2132	TLUG 2400		Tf
	DL...34	50.04.2132	TLUG 2400		Tf
	DL...35	50.04.2132	TLUG 2400		Tf
	DL...36	50.04.2132	TLUG 2400		Tf
	DL...37	50.04.2132	TLUG 2400		Tf
	DL...38	50.04.2132	TLUG 2400		Tf
	DL...39	50.04.2132	TLUG 2400		Tf
	DL...40	50.04.2132	TLUG 2400		Tf
	DL...41	50.04.2132	TLUG 2400		Tf

IND.	POS.NO.	PART NO.	VALUE	SPECIFICATIONS / EQUIVALENT	MANUF.
	DL...42	50.04.2132	TLUG 2400		Tf
	DL...43	50.04.2132	TLUG 2400		Tf
	DL...44	50.04.2132	TLUG 2400		Tf
	DL...45	50.04.2132	TLUG 2400		Tf
	DL...46	50.04.2132	TLUG 2400		Tf
	DL...47	50.04.2132	TLUG 2400		Tf
	DL...48	50.04.2132	TLUG 2400		Tf
	DL...49	50.04.2132	TLUG 2400		Tf
	DL...50	50.04.2133	CQY 75 N		Tf
	DL...51	50.04.2133	CQY 75 N		Tf
	DL...52	50.04.2133	CQY 75 N		Tf
	DL...53	50.04.2133	CQY 75 N		Tf
	DL...54	50.04.2133	CQY 75 N		Tf
	DL...55	50.04.2133	CQY 75 N		Tf
	DL...56	50.04.2133	CQY 75 N		Tf
	DL...57	50.04.2133	CQY 75 N		Tf
	DL...58	50.04.2133	CQY 75 N		Tf
	DL...59	50.04.2133	CQY 75 N		Tf
	DL...60	50.04.2133	CQY 75 N		Tf
	DL...61	50.04.2133	CQY 75 N		Tf
	DL...62	50.04.2133	CQY 75 N		Tf
	DL...63	50.04.2133	CQY 75 N		Tf
	DL...64	50.04.2133	CQY 75 N		Tf
	DL...65	50.04.2133	CQY 75 N		Tf
	DL...66	50.04.2133	CQY 75 N		Tf
	DL...67	50.04.2133	CQY 75 N		Tf
	DL...68	50.04.2133	CQY 75 N		Tf
	DL...69	50.04.2133	CQY 75 N		Tf
	DL...70	50.04.2133	CQY 75 N		Tf
	DL...71	50.04.2133	CQY 75 N		Tf
	DL...72	50.04.2133	CQY 75 N		Tf
	DL...73	50.04.2133	CQY 75 N		Tf
	DL...74	50.04.2133	CQY 75 N		Tf
	DL...75	50.04.2133	CQY 75 N		Tf
	DL...76	50.04.2133	CQY 75 N		Tf
	DL...77	50.04.2133	CQY 75 N		Tf
	DL...78	50.04.2133	CQY 75 N		Tf

IND.	POS.NO.	PART NO.	VALUE	SPECIFICATIONS / EQUIVALENT	MANUF.
	DL...79	50.04.2133	CQY 75 N		Tf
	DL...80	50.04.2133	CQY 75 N		Tf
	DL...81	50.04.2133	CQY 75 N		Tf
	DL...82	50.04.2133	CQY 75 N		Tf
	DL...83	50.04.2133	CQY 75 N		Tf
	DL...84	50.04.2133	CQY 75 N		Tf
	DL...85	50.04.2133	CQY 75 N		Tf
	DL...86	50.04.2133	CQY 75 N		Tf
	DL...87	50.04.2133	CQY 75 N		Tf
	DL...88	50.04.2133	CQY 75 N		Tf
	DL...89	50.04.2133	CQY 75 N		Tf
	DL...90	50.04.2133	CQY 75 N		Tf
	DL...91	50.04.2133	CQY 75 N		Tf
	DL...92	50.04.2133	CQY 75 N		Tf
	DL...93	50.04.2133	CQY 75 N		Tf
	DL...94	50.04.2133	CQY 75 N		Tf
	DL...95	50.04.2133	CQY 75 N		Tf
	DL...96	50.04.2133	CQY 75 N		Tf
	DL...97	50.04.2133	CQY 75 N		Tf
	DL...98	50.04.2133	CQY 75 N		Tf
	DL...99	50.04.2133	CQY 75 N		Tf
	DL...100	50.04.2133	CQY 75 N		Tf
	DL...101	50.04.2133	CQY 75 N		Tf
	DL...102	50.04.2133	CQY 75 N		Tf
	DL...103	50.04.2133	CQY 75 N		Tf
	DL...104	50.04.2133	CQY 75 N		Tf
	DL...105	50.04.2133	CQY 75 N		Tf
	DL...106	50.04.2133	CQY 75 N		Tf
	DL...107	50.04.2133	CQY 75 N		Tf
	DL...108	50.04.2133	CQY 75 N		Tf
	DL...109	50.04.2133	CQY 75 N		Tf
	DL...110	50.04.2133	CQY 75 N		Tf
	DL...111	50.04.2133	CQY 75 N		Tf
	DL...112	50.04.2133	CQY 75 N		Tf
	DL...113	50.04.2133	CQY 75 N		Tf
	DL...114	50.04.2133	CQY 75 N		Tf
	DL...115	50.04.2133	CQY 75 N		Tf

IND.	POS.NO.	PART NO.	VALUE	SPECIFICATIONS / EQUIVALENT	MANUF.
	DL...116	50.04.2133	CQY 75 N		Tf
	DL...117	50.04.2133	CQY 75 N		Tf
	DL...118	50.04.2133	CQY 75 N		Tf
	DL...119	50.04.2133	CQY 75 N		Tf
	DL...120	50.04.2133	CQY 75 N		Tf
	DL...121	50.04.2133	CQY 75 N		Tf
	DL...122	50.04.2133	CQY 75 N		Tf
	DL...123	50.04.2133	CQY 75 N		Tf
	DL...124	50.04.2133	CQY 75 N		Tf
	DL...125	50.04.2133	CQY 75 N		Tf
	DL...126	50.04.2133	CQY 75 N		Tf
	DL...127	50.04.2133	CQY 75 N		Tf
	DL...128	50.04.2133	CQY 75 N		Tf
	DL...129	50.04.2133	CQY 75 N		Tf
	DL...130	50.04.2133	CQY 75 N		Tf
	DL...131	50.04.2133	CQY 75 N		Tf
	DL...132	50.04.2133	CQY 75 N		Tf
	DL...133	50.04.2133	CQY 75 N		Tf
	DL...134	50.04.2133	CQY 75 N		Tf
	DL...135	50.04.2133	CQY 75 N		Tf
	DL...136	50.04.2133	CQY 75 N		Tf
	DL...137	50.04.2133	CQY 75 N		Tf
	DL...138	50.04.2133	CQY 75 N		Tf
	DL...139	50.04.2133	CQY 75 N		Tf
	DL...140	50.04.2133	CQY 75 N		Tf
	DL...141	50.04.2133	CQY 75 N		Tf
	DL...142	50.04.2133	CQY 75 N		Tf
	DL...143	50.04.2133	CQY 75 N		Tf
	DL...144	50.04.2133	CQY 75 N		Tf
	DL...145	50.04.2133	CQY 75 N		Tf
	DL...146	50.04.2133	CQY 75 N		Tf
	DL...147	50.04.2133	CQY 75 N		Tf
	DL...148	50.04.2133	CQY 75 N		Tf
	DL...149	50.04.2133	CQY 75 N		Tf
	DL...150	50.04.2133	CQY 75 N		Tf
	DL...151	50.04.2133	CQY 75 N		Tf
	DL...152	50.04.2133	CQY 75 N		Tf

IND.	POS.NO.	PART NO.	VALUE	SPECIFICATIONS / EQUIVALENT	MANUF.
	DL...153	50.04.2133	CQY 75 N		Tf
	DL...154	50.04.2133	CQY 75 N		Tf
	DL...155	50.04.2133	CQY 75 N		Tf
	DL...156	50.04.2133	CQY 75 N		Tf
	DL...157	50.04.2133	CQY 75 N		Tf
	DL...158	50.04.2133	CQY 75 N		Tf
	DL...159	50.04.2133	CQY 75 N		Tf
	DL...160	50.04.2133	CQY 75 N		Tf
	DL...161	50.04.2133	CQY 75 N		Tf
	DL...162	50.04.2133	CQY 75 N		Tf
	DL...163	50.04.2133	CQY 75 N		Tf
	DL...164	50.04.2133	CQY 75 N		Tf
	DL...165	50.04.2133	CQY 75 N		Tf
	DL...166	50.04.2133	CQY 75 N		Tf
	DL...167	50.04.2133	CQY 75 N		Tf
	DL...168	50.04.2112	MY 5353	CM 4-584 B; HLMP 3401	CM/GI/HP
	DL...169	50.04.2112	MY 5353	CM 4-584 B; HLMP 3401	CM/GI/HP
	DL...170	50.04.2112	MY 5353	CM 4-584 B; HLMP 3401	CM/GI/HP
	DL...171	50.04.2112	MY 5353	CM 4-584 B; HLMP 3401	CM/GI/HP
	DL...172	50.04.2111	MY 5753	CM 4-284 B; HLMP 3301	CM/GI/HP
	S.....1	55.15.0501		Button nr. 55.15.0515	Schadow
	S.....2	55.15.0501		Button nr. 55.15.0515	Schadow
	S.....3	55.15.0501		Button nr. 55.15.0515	Schadow
	S.....4	55.15.0501		Button nr. 55.15.0515	Schadow
	S.....5	55.15.0501		Button nr. 55.15.0515	Schadow
	S.....6	55.15.0501		Button nr. 55.15.0515	Schadow
	S.....7	55.15.0501		Button nr. 55.15.0515	Schadow
	S.....8	55.15.0501		Button nr. 55.15.0515	Schadow
	S.....9	55.15.0501		Button nr. 55.15.0515	Schadow
	S....10	55.15.0501		Button nr. 55.15.0515	Schadow
	S....11	55.15.0501		Button nr. 55.15.0515	Schadow
	S....12	55.15.0501		Button nr. 55.15.0515	Schadow
	S....13	55.15.0501		Button nr. 55.15.0515	Schadow
	S....14	55.15.0501		Button nr. 55.15.0515	Schadow
	S....15	55.15.0501		Button nr. 55.15.0515	Schadow
	S....16	55.15.0501		Button nr. 55.15.0515	Schadow

IND.	POS.NO.	PART NO.	VALUE	SPECIFICATIONS / EQUIVALENT	MANUF.
	S....17	55.15.0501		Button nr. 55.15.0515	Schadow
	S....18	55.15.0501		Button nr. 55.15.0515	Schadow
	S....19	55.15.0501		Button nr. 55.15.0515	Schadow
	S....20	55.15.0501		Button nr. 55.15.0515	Schadow
	S....21	55.15.0501		Button nr. 55.15.0515	Schadow
	S....22	55.15.0501		Button nr. 55.15.0515	Schadow
	S....23	55.15.0501		Button nr. 55.15.0515	Schadow
	S....24	55.15.0501		Button nr. 55.15.0515	Schadow
	S....25	55.15.0501		Button nr. 55.15.0515	Schadow
	S....26	55.15.0501		Button nr. 55.15.0510	Schadow
	S....27	55.15.0501		Button nr. 55.15.0510	Schadow
	S....28	55.15.0501		Button nr. 55.15.0510	Schadow
	S....29	55.15.0501		Button nr. 55.15.0510	Schadow
	S....30	55.15.0501		Button nr. 55.15.0510	Schadow
	S....31	55.15.0501		Button nr. 55.15.0510	Schadow
	S....32	55.15.0501		Button nr. 55.15.0510	Schadow
	S....33	55.15.0501		Button nr. 55.15.0510	Schadow
	S....34	55.15.0501		Button nr. 55.15.0510	Schadow
	S....35	55.15.0501		Button nr. 55.15.0510	Schadow
	S....36	55.15.0501		Button nr. 55.15.0510	Schadow
	S....37	55.15.0501		Button nr. 55.15.0510	Schadow
	S....38	55.15.0501		Button nr. 55.15.0510	Schadow
	S....39	55.15.0501		Button nr. 55.15.0510	Schadow
	S....40	55.15.0501		Button nr. 55.15.0510	Schadow
	S....41	55.15.0501		Button nr. 55.15.0510	Schadow
	S....42	55.15.0501		Button nr. 55.15.0510	Schadow
	S....43	55.15.0501		Button nr. 55.15.0510	Schadow
	S....44	55.15.0501		Button nr. 55.15.0510	Schadow
	S....45	55.15.0501		Button nr. 55.15.0510	Schadow
	S....46	55.15.0501		Button nr. 55.15.0510	Schadow
	S....47	55.15.0501		Button nr. 55.15.0510	Schadow
	S....48	55.15.0501		Button nr. 55.15.0510	Schadow
	S....49	55.15.0501		Button nr. 55.15.0510	Schadow
	S....50	55.15.0501		Button nr. 55.15.0510	Schadow
	S....51	55.15.0501		Button nr. 55.15.0516	Schadow
	S....52	55.15.0501		Button nr. 55.15.0516	Schadow
	S....53	55.15.0501		Button nr. 55.15.0516	Schadow

IND.	POS.NO.	PART NO.	VALUE	SPECIFICATIONS / EQUIVALENT	MANUF.
	S....54	55.15.0501		Button nr. 55.15.0516	Schadow
	S....55	55.15.0501		Button nr. 55.15.0516	Schadow
	S....56	55.15.0501		Button nr. 55.15.0516	Schadow
	S....57	55.15.0501		Button nr. 55.15.0516	Schadow
	S....58	55.15.0501		Button nr. 55.15.0516	Schadow
	S....59	55.15.0501		Button nr. 55.15.0516	Schadow
	S....60	55.15.0501		Button nr. 55.15.0516	Schadow
	S....61	55.15.0501		Button nr. 55.15.0516	Schadow
	S....62	55.15.0501		Button nr. 55.15.0516	Schadow
	S....63	55.15.0501		Button nr. 55.15.0516	Schadow
	S....64	55.15.0501		Button nr. 55.15.0516	Schadow
	S....65	55.15.0501		Button nr. 55.15.0516	Schadow
	S....66	55.15.0501		Button nr. 55.15.0516	Schadow
	S....67	55.15.0501		Button nr. 55.15.0516	Schadow
	S....68	55.15.0501		Button nr. 55.15.0516	Schadow
	S....69	55.15.0501		Button nr. 55.15.0516	Schadow
	S....70	55.15.0501		Button nr. 55.15.0516	Schadow
	S....71	55.15.0501		Button nr. 55.15.0516	Schadow
	S....72	55.15.0501		Button nr. 55.15.0516	Schadow
	S....73	55.15.0501		Button nr. 55.15.0516	Schadow
	S....74	55.15.0501		Button nr. 55.15.0516	Schadow
	S....75	55.15.0501		Button nr. 55.15.0516	Schadow
	S....76	55.15.0501		Button nr. 55.15.0513	Schadow
	S....77	55.15.0501		Button nr. 55.15.0513	Schadow
	S....78	55.15.0501		Button nr. 55.15.0513	Schadow
	S....79	55.15.0501		Button nr. 55.15.0513	Schadow
	S....80	55.15.0501		Button nr. 55.15.0513	Schadow
	S....81	55.15.0501		Button nr. 55.15.0513	Schadow
	S....82	55.15.0501		Button nr. 55.15.0513	Schadow
	S....83	55.15.0501		Button nr. 55.15.0513	Schadow
	S....84	55.15.0501		Button nr. 55.15.0513	Schadow
	S....85	55.15.0501		Button nr. 55.15.0513	Schadow
	S....86	55.15.0501		Button nr. 55.15.0513	Schadow
	S....87	55.15.0501		Button nr. 55.15.0513	Schadow
	S....88	55.15.0501		Button nr. 55.15.0513	Schadow
	S....89	55.15.0501		Button nr. 55.15.0513	Schadow
	S....90	55.15.0501		Button nr. 55.15.0513	Schadow

IND.	POS.NO.	PART NO.	VALUE	SPECIFICATIONS / EQUIVALENT	MANUF.
	S....91	55.15.0501		Button nr. 55.15.0513	Schadow
	S....92	55.15.0501		Button nr. 55.15.0513	Schadow
	S....93	55.15.0501		Button nr. 55.15.0513	Schadow
	S....94	55.15.0501		Button nr. 55.15.0513	Schadow
	S....95	55.15.0501		Button nr. 55.15.0513	Schadow
	S....96	55.15.0501		Button nr. 55.15.0513	Schadow
	S....97	55.15.0501		Button nr. 55.15.0513	Schadow
	S....98	55.15.0501		Button nr. 55.15.0513	Schadow
	S....99	55.15.0501		Button nr. 55.15.0513	Schadow
	S...100	55.15.0501		Button nr. 55.15.0513	Schadow
	S...101	55.15.0501		Button nr. 55.15.0519	Schadow
	S...102	55.15.0501		Button nr. 55.15.0519	Schadow
	S...103	55.15.0501		Button nr. 55.15.0519	Schadow
	S...104	55.15.0501		Button nr. 55.15.0519	Schadow
	S...105	55.15.0501		Button nr. 55.15.0519	Schadow
	S...106	55.15.0501		Button nr. 55.15.0519	Schadow
	S...107	55.15.0501		Button nr. 55.15.0519	Schadow
	S...108	55.15.0501		Button nr. 55.15.0519	Schadow
	S...109	55.15.0501		Button nr. 55.15.0519	Schadow
	S...110	55.15.0501		Button nr. 55.15.0519	Schadow
	S...111	55.15.0501		Button nr. 55.15.0519	Schadow
	S...112	55.15.0501		Button nr. 55.15.0519	Schadow
	S...113	55.15.0501		Button nr. 55.15.0519	Schadow
	S...114	55.15.0501		Button nr. 55.15.0519	Schadow
	S...115	55.15.0501		Button nr. 55.15.0519	Schadow
	S...116	55.15.0501		Button nr. 55.15.0519	Schadow
	S...117	55.15.0501		Button nr. 55.15.0519	Schadow
	S...118	55.15.0501		Button nr. 55.15.0519	Schadow
	S...119	55.15.0501		Button nr. 55.15.0519	Schadow
	S...120	55.15.0501		Button nr. 55.15.0519	Schadow
	S...121	55.15.0501		Button nr. 55.15.0519	Schadow
	S...122	55.15.0501		Button nr. 55.15.0519	Schadow
	S...123	55.15.0501		Button nr. 55.15.0519	Schadow
	S...124	55.15.0501		Button nr. 55.15.0519	Schadow
	S...125	55.15.0501		Button nr. 55.15.0519	Schadow
	S...126	55.15.0501		Button nr. 55.15.0510	Schadow
	S...127	55.15.0501		Button nr. 55.15.0510	Schadow

IND.	POS.NO.	PART NO.	VALUE	SPECIFICATIONS / EQUIVALENT	MANUF.
	S...128	55.15.0501		Button nr. 55.15.0510	Schadow
	S...129	55.15.0501		Button nr. 55.15.0510	Schadow
	S...130	55.15.0501		Button nr. 55.15.0510	Schadow
	S...131	55.15.0501		Button nr. 55.15.0510	Schadow
	S...132	55.15.0501		Button nr. 55.15.0510	Schadow
	S...133	55.15.0501		Button nr. 55.15.0510	Schadow
	S...134	55.15.0501		Button nr. 55.15.0510	Schadow
	S...135	55.15.0501		Button nr. 55.15.0510	Schadow
	S...136	55.15.0501		Button nr. 55.15.0510	Schadow
	S...137	55.15.0501		Button nr. 55.15.0510	Schadow
	S...138	55.15.0501		Button nr. 55.15.0510	Schadow
	S...139	55.15.0501		Button nr. 55.15.0510	Schadow
	S...140	55.15.0501		Button nr. 55.15.0510	Schadow
	S...141	55.15.0501		Button nr. 55.15.0510	Schadow
	S...142	55.15.0501		Button nr. 55.15.0510	Schadow
	S...143	55.15.0501		Button nr. 55.15.0510	Schadow
	W.....1	1.023.114.01	Cable	40 conntacts; flat cable	
	W.....2	1.023.114.19	Cable	40 conntacts; flat cable	
	W.....3	1.023.114.22	Cable	40 conntacts; flat cable	
	W.....4	1.023.114.01	Cable	40 conntacts; flat cable	

MANUFACTURERS: CM=Chicaco Miniatur, GI=General Instruments,
HP=Hewlett Packard, Ph=Philips, TF=Telefunken
Si=Siemens

ORIG 89/09/09

AUDIO REMOTE CONTROL 8CH 1.328.501.00
AUDIO REMOTE CONTROL 24CH 1.328.503.00
–KEY BOARD DRIVER 1.328.505.00

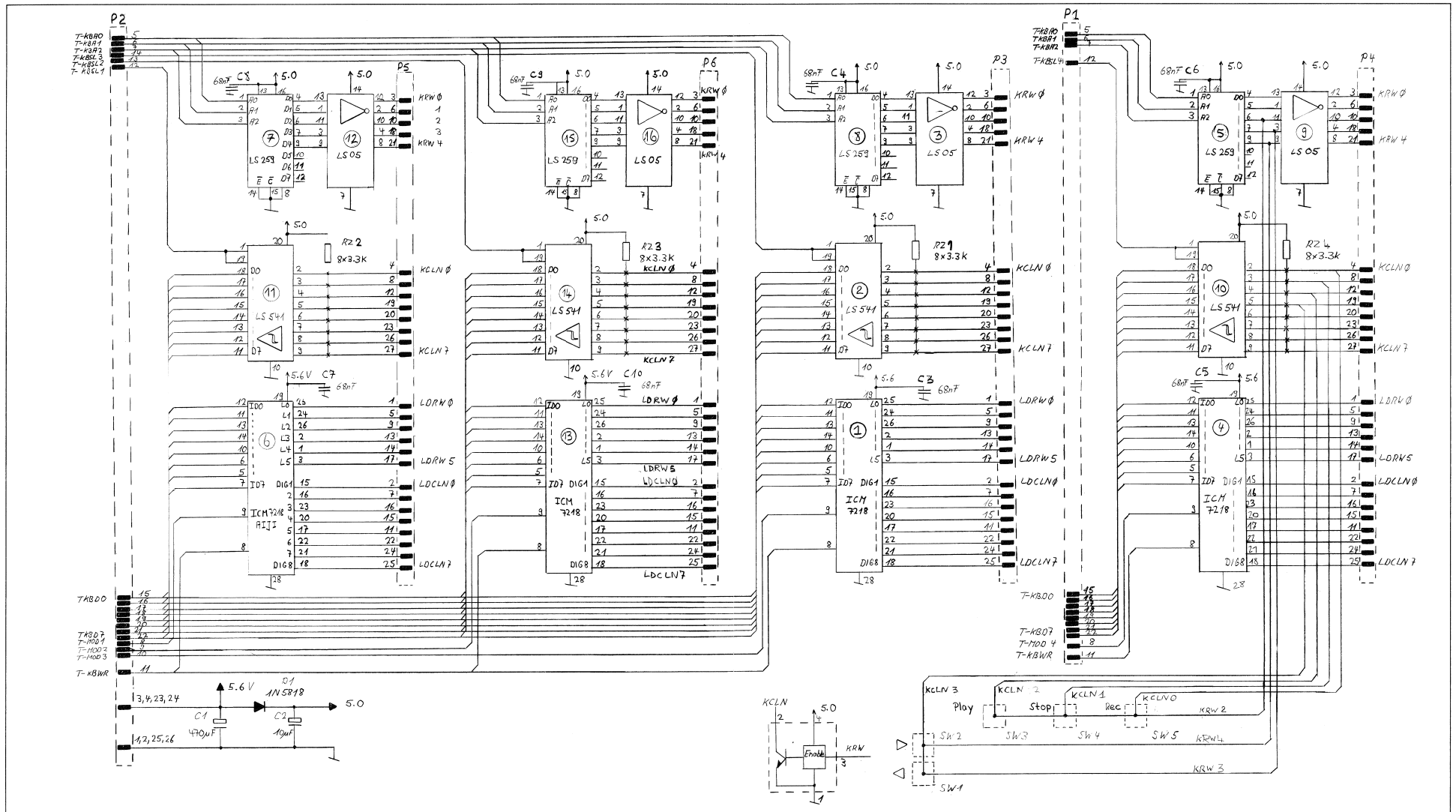

06.2.87 WEG		A 820 MCH		
STUDER	KEY-BOARD DRIVER		1.328.505.00	PAGE 1 OF 1

AUDIO REMOTE CONTROL 8CH 1.328.501.00
AUDIO REMOTE CONTROL 24CH 1.328.503.00
–KEY BOARD DRIVER 1.328.505.00

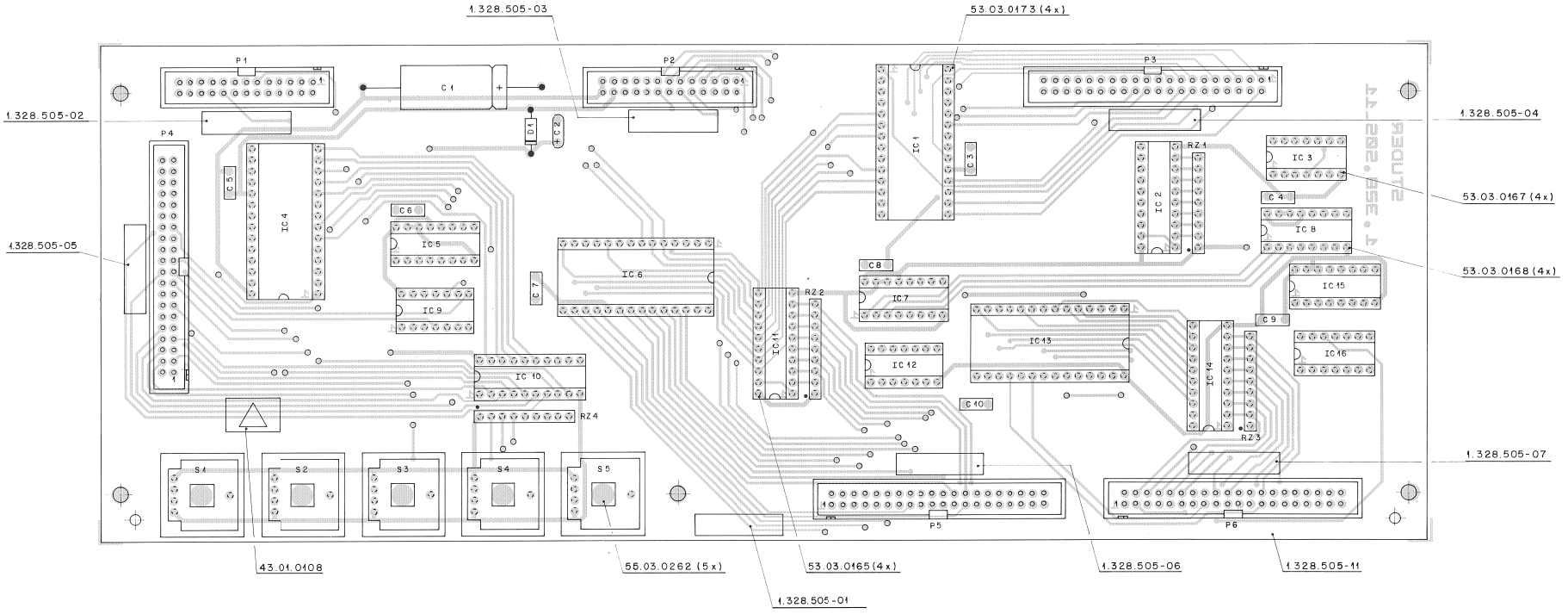

IND.	POS.NO.	PART NO.	VALUE	SPECIFICATIONS / EQUIVALENT	MANUF.
	C.....1	59.25.3471	470 uF	-20%, 16V , EL	
	C.....2	59.26.1100	10 uF	20%, 10V , SAL	
	C.....3	59.06.0683	68 nF	10%, 63V , PETP	
	C.....4	59.06.0683	68 nF	10%, 63V , PETP	
	C.....5	59.06.0683	68 nF	10%, 63V , PETP	
	C.....6	59.06.0683	68 nF	10%, 63V , PETP	
	C.....7	59.06.0683	68 nF	10%, 63V , PETP	
	C.....8	59.06.0683	68 nF	10%, 63V , PETP	
	C.....9	59.06.0683	68 nF	10%, 63V , PETP	
	C.....10	59.06.0683	68 nF	10%, 63V , PETP	
	D.....1	50.04.0512	1N 5818,	1N 5819	Mot
	IC....1	50.07.0035	ICM7218AIJ		Maxim
	IC....2	50.06.0541	SN74LS541N		TI/Mot
	IC....3	50.06.0005	SN 74LS05N		TI
	IC....4	50.07.0035	ICM7218AIJ		Maxim
	IC....5	50.06.0259	SN74LS259N		TI/Mot
	IC....6	50.07.0035	ICM7218AIJ		Maxim
	IC....7	50.06.0259	SN74LS259N		TI/Mot
	IC....8	50.06.0259	SN74LS259N		TI/Mot
	IC....9	50.06.0005	SN74LS05 N		TI
	IC...10	50.06.0541	SN74LS541N		TI/Mot
	IC...11	50.06.0541	SN74LS541N		TI/Mot
	IC...12	50.06.0005	SN74LS05 N		TI
	IC...13	50.07.0035	ICM7218AIJ		Maxim
	IC...14	50.06.0541	SN74LS541N		TI/Mot
	IC...15	50.06.0259	SN74LS259N		TI/Mot
	IC...16	50.06.0005	SN74LS05 N		TI
	P.....1	54.14.2603		26 Pin socket	
	P.....2	54.14.2603		26 Pin socket	
	P.....3	54.14.2404		40 Pin socket	
	P.....4	54.14.2404		40 Pin socket	
	P.....5	54.14.2404		40 Pin socket	
	P.....6	54.14.2404		40 Pin socket	

IND.	POS.NO.	PART NO.	VALUE	SPECIFICATIONS / EQUIVALENT	MANUF.
	RZ....1	57.88.4332	8*3.3 kOhm	, 5%, Network	
	RZ....2	57.88.4332	8*3.3 kOhm	, 5%, Network	
	RZ....3	57.88.4332	8*3.3 kOhm	, 5%, Network	
	RZ....4	57.88.4332	8*3.3 kOhm	, 5%, Network	
	SW....1	55.03.0261	TTL Switch	, Rafi Nr.3.13001.110	
	SW....2	55.03.0261	TTL Switch	, Rafi Nr.3.13001.110	
	SW....3	55.03.0261	TTL Switch	, Rafi Nr.3.13001.110	
	SW....4	55.03.0261	TTL Switch	, Rafi Nr.3.13001.110	
	SW....5	55.03.0261	TTL Switch	, Rafi Nr.3.13001.110	

Ce=Ceramic, El=Electrolytic,SAL=Solid Aluminium , PP=Polypropylen,
PETP=Polyesterfilm

MANUFACTURER : Mot= Motorola, TI= Texas Instruments

ORIG 87/03/05

10 Spare Parts

10.1 Covers and Console 10/2

10.2 Adapter 10/4

10.3 Pinch Roller 10/6

10.4 Tape Lifter Bolt 10/7

10.5 Push Button Assembly 10/8

10.6 Edit Assembly 10/10

10.7 Lifter Assembly Right 10/12

10.8 Lifter Assembly Left 10/14

10.9 Tacho Roller Assembly 10/16

10.10 Prestabilizer Assembly 10/18

10.11 Capstan Motor 10/20

10.12 Tape Tension Assembly left/right 10/22

10.13 Pinch Roller Assembly 10/24

10.14 Brake Assembly 10/26

10.15 Spooling Motor Assembly 10/28

10.16 Head Block 10/30

10.17 Release Cable 10/32

10.18 Labels 10/34

10.1 Covers and Console

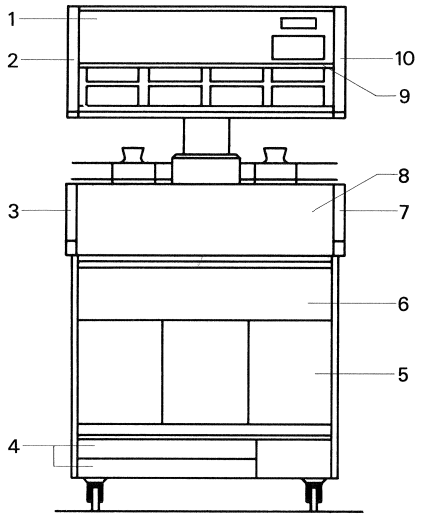

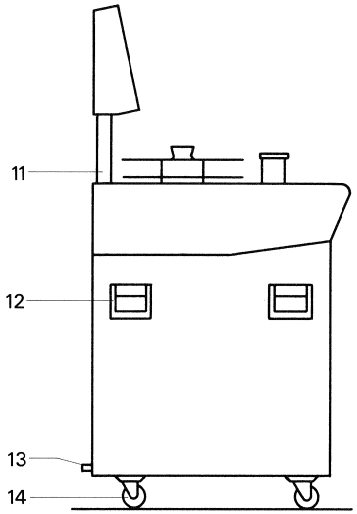

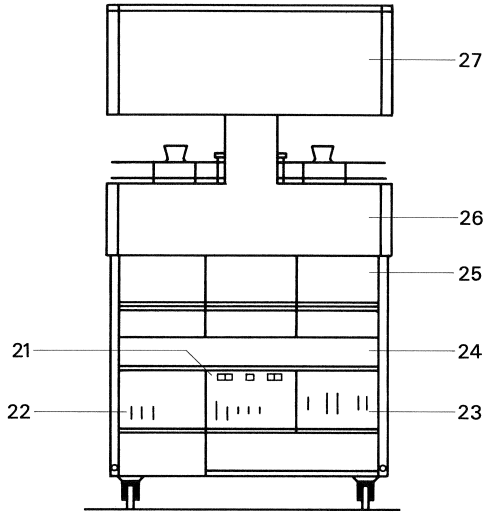

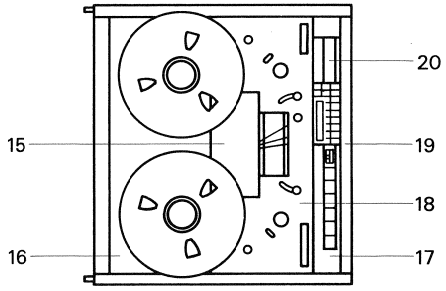

Covers and Console

Index	Qty.	Order No.	Part Name	Specification
1	1	1.820.600.02	Front panel 8 ch	
	1	1.820.620.13	Front panel 24 ch	
2	1	1.820.620.02	Wooden side–panel (Panel) brown	left
	1	1.820.620.23	Wooden side–panel (Panel) black	left
3	1	1.820.310.01	Wooden side–panel (Console) brown	left
	1	1.820.948.00	Wooden side–panel (Console) black	left
4	2	1.918.001.09	Filler panel 19"	
5	3	1.820.370.04	Front cover on audio–drawer	
6	1	1.820.313.00	Flop for electronic section	
7	1	1.820.310.02	Wooden side–panel (Console) brown	right
	1	1.820.949.00	Wooden side–panel (Console) black	right
8	1	1.820.310.07	Front cover lower part	
9	1	1.820.600.01	LED–rail	
10	1	1.820.620.03	Wooden side–panel (Panel) brown	right
	1	1.820.620.24	Wooden side–panel (Panel) black	right
11	1	1.820.622.00	Panel support	
12	4	1.038.169.81	Handle compl.	
13	2	1.820.300.21	Bumper	
14	4	33.04.0250	Wheel	
15	1	1.820.114.10	Cover for preamplifier	
16	1	1.820.115.00	Rear tape transport cover	1" and 2"
17	1	1.820.220.01	Push–button rail	
18	1	1.820.116.00	Front tape transport cover	1"
	1	1.820.114.00	Front tape transport cover	2"
19	1	1.820.228.00	Hand rest brown	
	1	1.820.227.00	Hand rest black (Option)	
20	1	1.820.230.02	Push–button flop	
21	1	1.820.320.02	Filler panel	
	1	1.820.321.00	Synchronizer–panel (Option)	
22	1	1.820.320.03	Audio remote–panel	
23	1	1.820.325.01	Tape deck remote–panel	
24	1	1.820.310.03	Rear panel rail	
25	3	1.820.315.00	XLR–panel	
26	1	1.820.310.38	Rear cover (Machine)	
27	1	1.820.620.01	Rear cover (Panel)	

10.2 Adapter

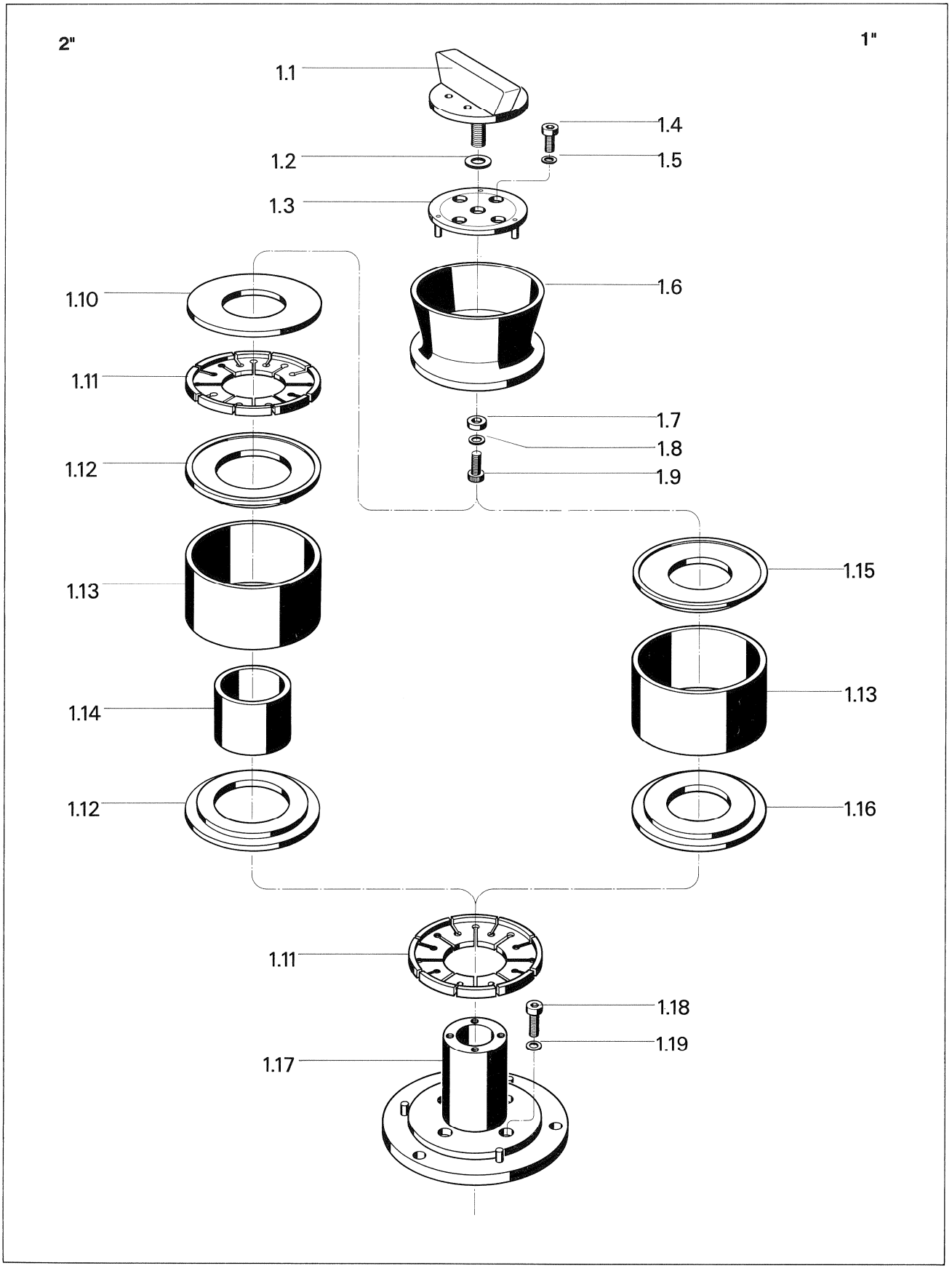
2"
1"
1.1
1.2
1.3
1.4
1.5
1.6
1.7
1.8
1.9
1.10
1.11
1.12
1.13
1.14
1.15
1.16
1.17
1.18
1.19

Adapter 1"

Index	Qty.	Order No.	Part Name	Specification
		1.013.402.81	Adapter	1"
1.1	1	1.013.405.00	Screw grip compl.	
1.2	1	1.013.400.16	POM–washer	
1.3	1	1.013.400.12	Upper thrust plate	
1.4	4	21.53.0457	Allen screw	ZN,M4x12
1.5	4	24.16.1040	Fin washer	D4,3/7
1.6	1	1.013.400.18	Grip	
1.7	1	1.010.018.23	Disk	MS,D4,2/9x2,5
1.8	1	24.16.1040	Fin washer	D4,3/7
1.9	1	21.53.0456	Allen screw	ZN,M4x10
1.11	1	1.013.400.05	Expanding ring	
1.13	1	1.013.402.02	Guiding tube	
1.15	1	1.013.402.01	Thrust washer	
1.16	1	1.013.402.03	Thrust washer	
1.17	1	1.013.400.01	Adapter support	
1.18	4	21.53.0460	Allen screw	ZN,M4x20
1.19	4	24.16.1040	Fin washer	D4,3/7

Adapter 2"

Index	Qty.	Order No.	Part Name	Specification
		1.013.400.81	Adapter	2"
1.1	1	1.013.405.00	Screw grip compl.	
1.2	1	1.013.400.16	POM–washer	
1.3	1	1.013.400.12	Upper thrust plate	
1.4	4	21.53.0457	Allen screw	M4x12
1.5	4	24.16.1040	Fin washer	D4,3/7
1.6	1	1.013.400.18	Grip	
1.7	1	1.010.018.23	Disk	MS D4,2/9x2,5
1.8	1	24.16.1040	Fin washer	D4,3/7
1.9	1	21.53.0456	Allen screw	M4x10
1.10	1	1.013.400.09	Lower thrust plate	
1.11	2	1.013.400.05	Expanding ring	
1.12	2	1.013.400.06	Thrust washer	
1.13	1	1.013.400.08	Guiding tube	
1.14	1	1.013.400.07	Distance tube	
1.17	1	1.013.400.01	Adapter support	
1.18	4	21.53.0460	Allen screw	ZN,M4x20
1.19	4	24.16.1040	Fin washer	D4,3/7

10.3 Pinch Roller

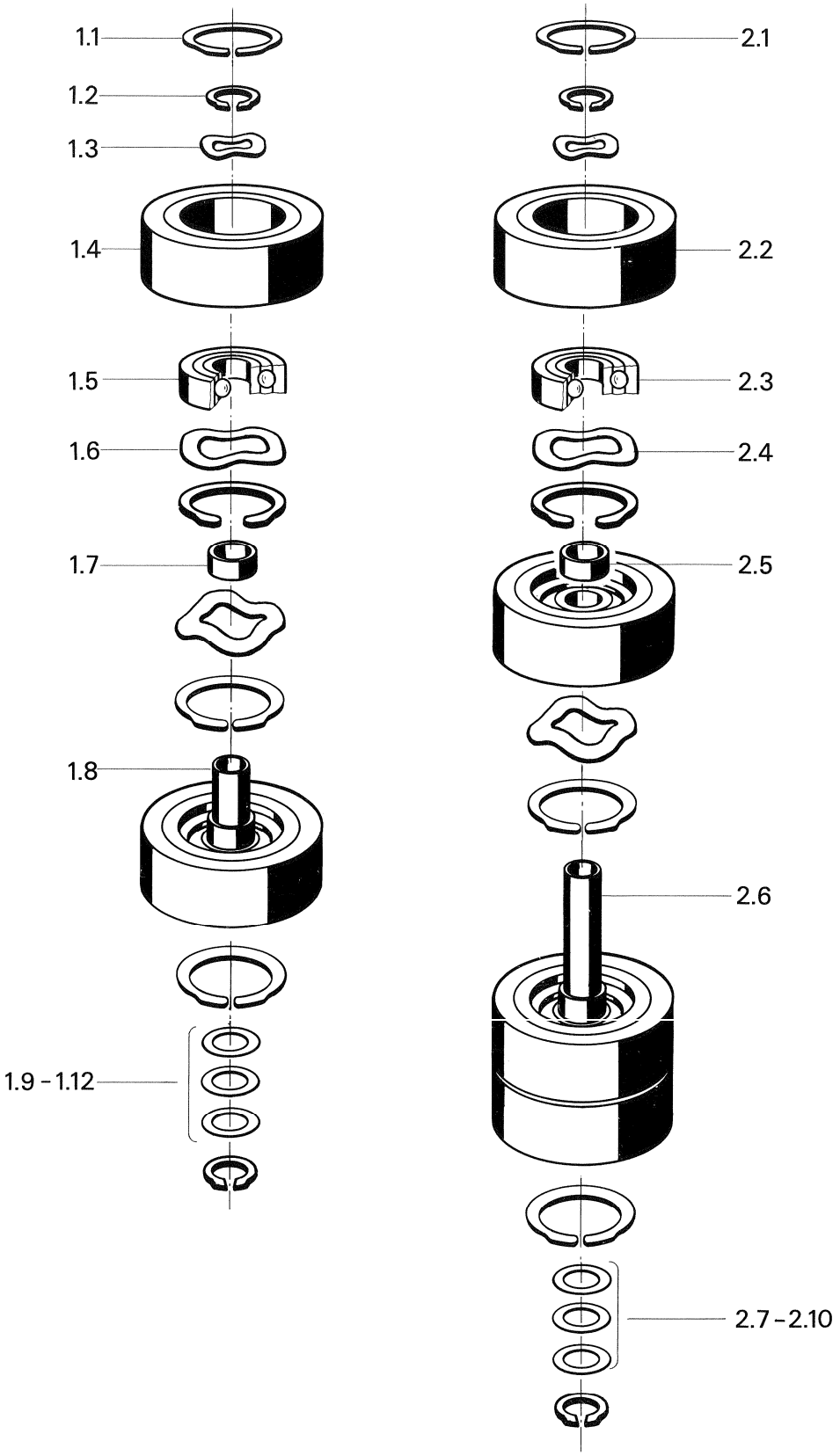

Pinch Roller 1"

Index	Qty.	Order No.	Part Name	Specification
		1.820.462.00	Pinch roller (2 parts)	1"
1.1	4	24.99.0136	Circlip	D22
1.2	2	24.16.5100	Circlip	D10
1.3	1	37.99.0102	Compensating shim	D10,5/15,8x0,3
1.4	2	1.820.462.01	Pinch roller	2 pieces = 1"
1.5	2	41.99.0103	Ball bearing	D10/22x6
1.6	2	37.99.0103	Compensating shim	D15,8/21.8x0,2
1.7	1	1.820.471.04	Spacer tube	
1.8	1	1.820.462.05	Bearing case	1"
1.9	1	1.080.530.06	Spacer	D10,1/14x0,2
1.10	2	1.080.530.08	Spacer	D10,1/14x0,1
1.11	1	1.080.530.09	Spacer	D10,1/14x0,15
1.12	1	1.080.530.10	Spacer	D10,1/14x0,12

Pinch Roller 2"

Index	Qty.	Order No.	Part Name	Specification
		1.820.472.00	Pinch roller (4 parts)	2"
2.1	8	24.99.0136	Circlip	D22
2.2	4	1.820.472.01	Pinch roller	4 pieces. = 2"
2.3	4	41.99.0103	Ball bearing	D10/22x6
2.4	4	37.99.0103	Compensating shim	D15,8/21,8x0,2
2.5	3	1.820.471.04	Spacer tube	
2.6	1	1.820.471.05	Bearing case	2"
2.7	1	1.080.530.06	Spacer	D10,1/14x0,2
2.8	4	1.080.530.08	Spacer	D10,1/14x0,1
2.9	1	1.080.530.09	Spacer	D10,1/14x0,15
2.10	1	1.080.530.10	Spacer	D10,1/14x0,12

10.4 Tape Lifter Bolt

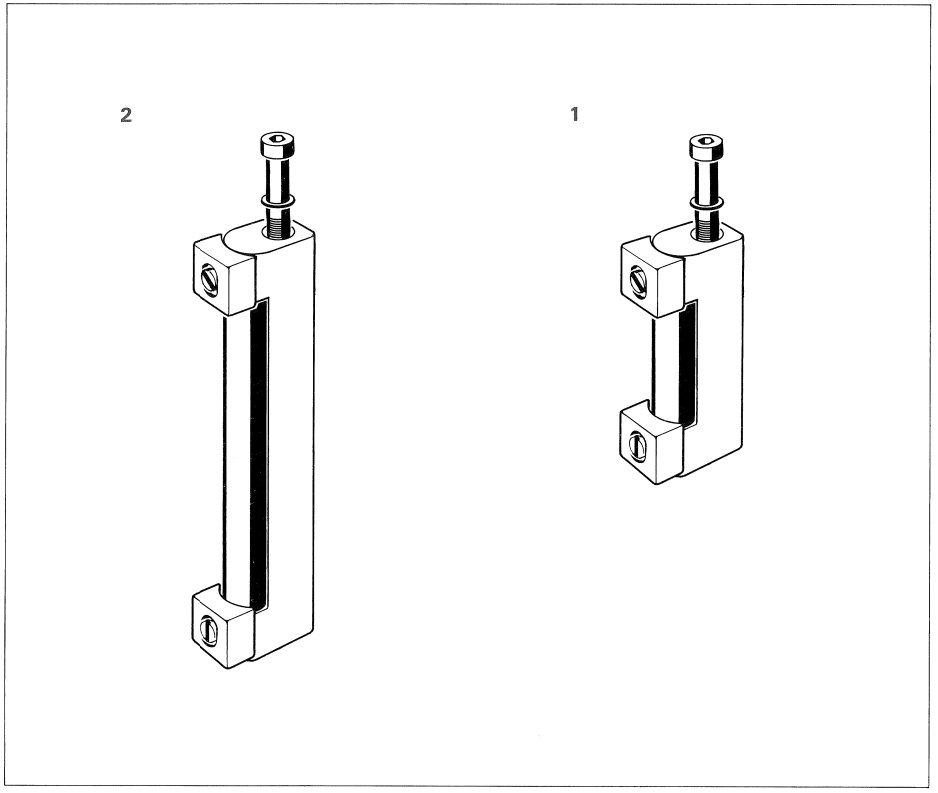

Tape Lifter Bolt 1"

Index	Qty.	Order No.	Part Name	Specification
1		1.820.123.00	Tape lifter compl.	1"
	1	21.53.0467	Allen screw	M4x45
	1	24.16.1040	Fin washer	D4,3/7,0

Tape Lifter Bolt 2"

Index	Qty.	Order No.	Part Name	Specification
2		1.820.124.00	Tape lifter compl.	2"
	1	21.53.0467	Allen screw	M4x45
	1	24.16.1040	Fin washer	D4,3/7,0

10.5 Push Button Assembly

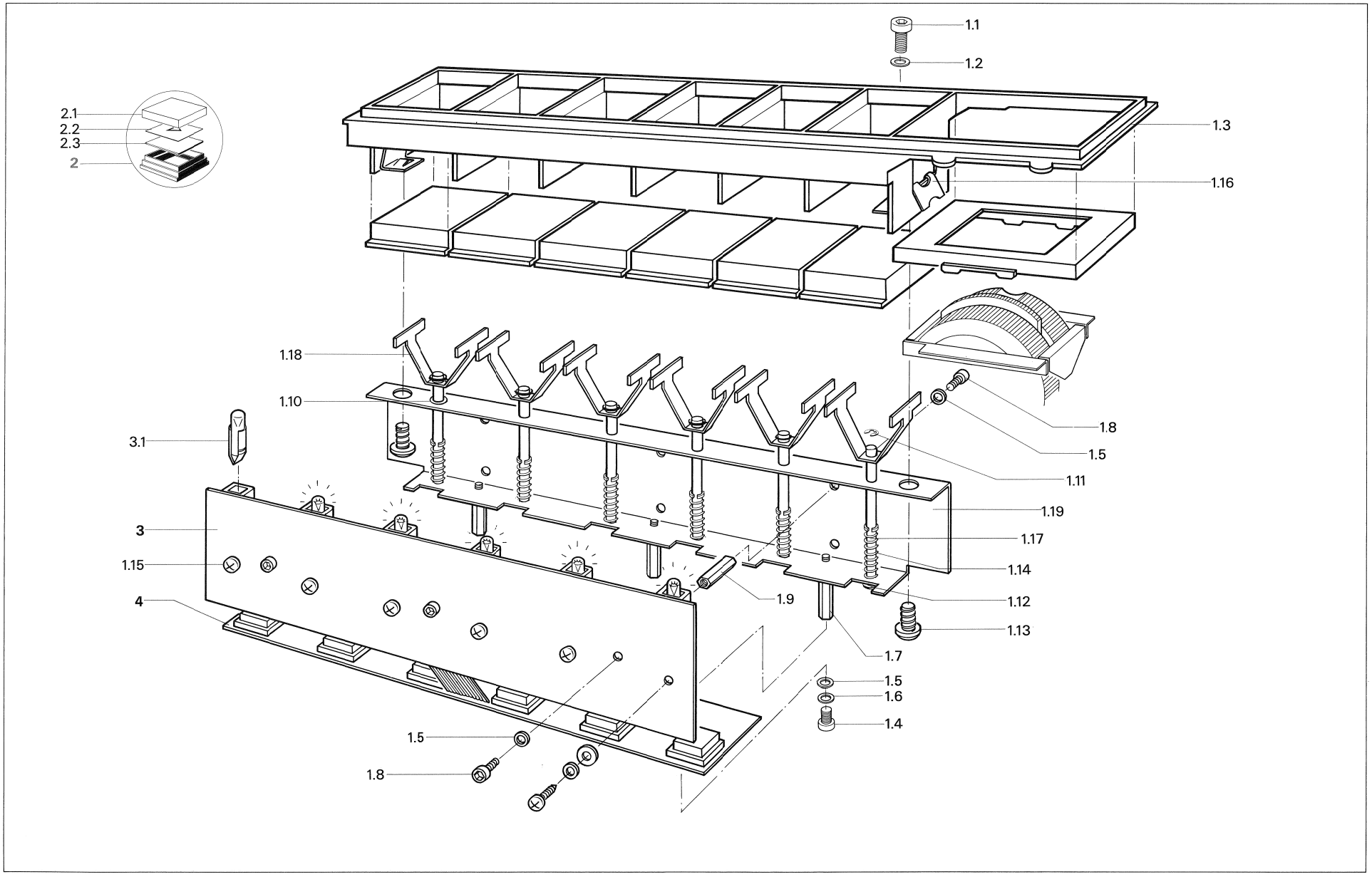

Push Button Assembly

Index	Qty.	Order No.	Part Name	Specification
		1.820.240.00	Push button assembly	(★= not included)
1.1★	2*	21.53.0456	Allen screw	M4x10
1.2★	2*	24.16.1040	Fin washer	
1.3	1	1.820.240.03	Push button support	
1.4	3	21.53.0354	Allen screw	M3x6
1.5	8	24.16.1030	Fin washer	D3,2/5,5
1.6	5	23.01.1032	Spacer	D3,2/6x0,5
1.7	3	1.010.131.27	Bolt	M3/M3x19,5
1.8	6	21.53.0355	Allen screw	M3x8
1.9	3	1.010.034.27	Bolt	M3x19
1.10	6	1.010.032.23	PTFE–shim	D4,1/7x0,25
1.11	6	24.16.3019	Circlip	D1,9
1.12	12	24.16.3032	Circlip	D3,2
1.13	2	20.21.7355	Self tapping screw	D4,8x9,5
1.14	6	1.080.260.12	Spring	
1.15	6	20.22.7156	Self tapping screw	D2,9/13
1.16	2	22.16.2501	Fixing nut	
1.17	6	1.820.240.02	Push button shaft	
1.18	6	1.080.260.09	Push button support	
1.19	1	1.820.240.01	Push button rail	
2	6	1.080.260.02	Push button	
2.1	6	1.080.260.03	Push button cover	
2.2	1	1.080.260.18	Label:	EDIT
	1	1.080.260.16		REC
	1	1.080.260.17		STOP
	1	1.080.260.15		PLAY
	2	1.080.260.14		◄►
2.3	6	1.080.260.19	Diffuser	
3	1	1.820.766.00	Tape deck indicator board	
3.1	6	51.02.0145	Bulb 24V, 40mA	
4	1	1.820.769.00	Tape deck push button board	

10.6 Edit Assembly

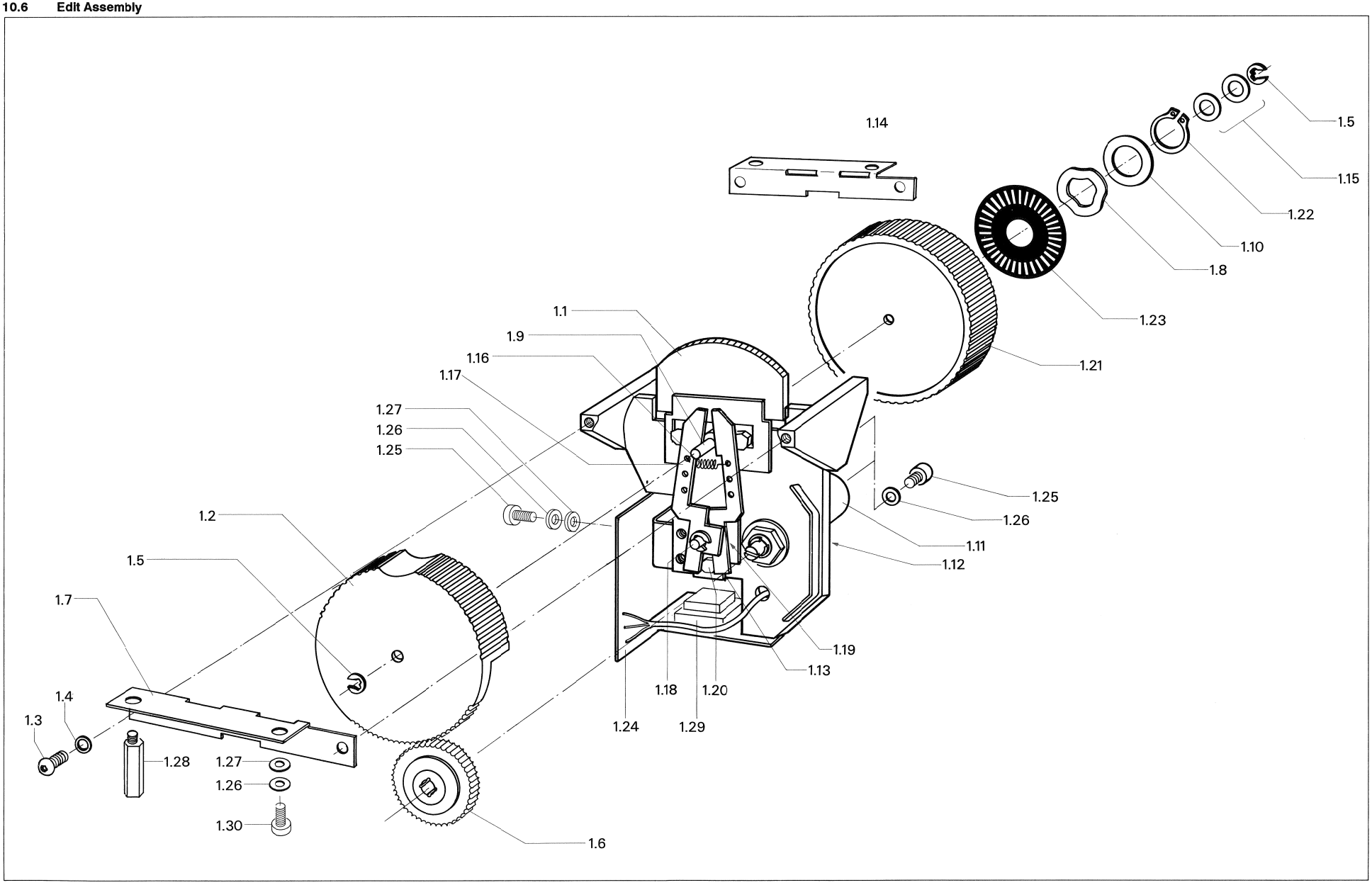

Edit Assembly

Index	Qty.	Order No.	Part Name	Specification
		1.820.250.00	Edit assembly compl.	
1.1	1	1.820.253.00	Shuttle bar (button compl.)	
1.2	1	1.820.250.10	SET/CUE wheel	
1.3	4	21.51.8354	Oval head allen screw	M3x6
1.4	4	24.16.1030	Fin washer	
1.5	2	24.16.3032	Circlip	D3,2
1.6	1	36.01.0301	Gear wheel	
1.7	1	1.820.250.03	Bracket rear	
1.8	1	1.010.083.23	Spring washer	D12,1/19x0,5
1.9	1	1.820.250.11	Shaft large	
1.10	1	24.99.0132	Shim	
1.11	1	58.99.0139	Potentiometer	5K,10%,2W
1.12	1	1.020.256.07	Spring	
1.13	10mm	89.01.0164	Felt strip	
1.14	1	1.820.250.04	Bracket front	
1.15	2	1.067.180.14	Shim	D4,3/7,5x0,15
	2	1.062.210.08	Shim	D4,3/7,5x0,1
	2	1.062.210.09	Shim	D4,3/7,5x0,2
1.16	1	1.080.112.02	Spring	
1.17	2	1.820.250.07	Lever	
1.18	1	1.820.250.08	Shaft small	
1.19	1	23.01.3043	Washer	D4,3/12x1,0
1.20	3	1.820.250.13	Guiding bolt	
1.21	1	1.820.911.00	Flywheel compl.	
1.22	1	24.16.5120	Circlip	D12
1.23	1	1.820.250.06	Tacho disk	
1.24	1	1.820.765.00	Cue sensor board	(* = included)
1.25	4	21.53.0354	Allen screw	M3x6
1.26	4	24.16.1030	Fin washer	
1.27	5	23.01.1032	Washer	D3,2/6x0,5
1.28	1	1.010.135.27	Support bolt	M3/28,5
1.29	1*	55.03.0261	TTL–switch	
1.30	3	21.53.0353	Allen screw	M3x5

10.7 Lifter Assembly Right

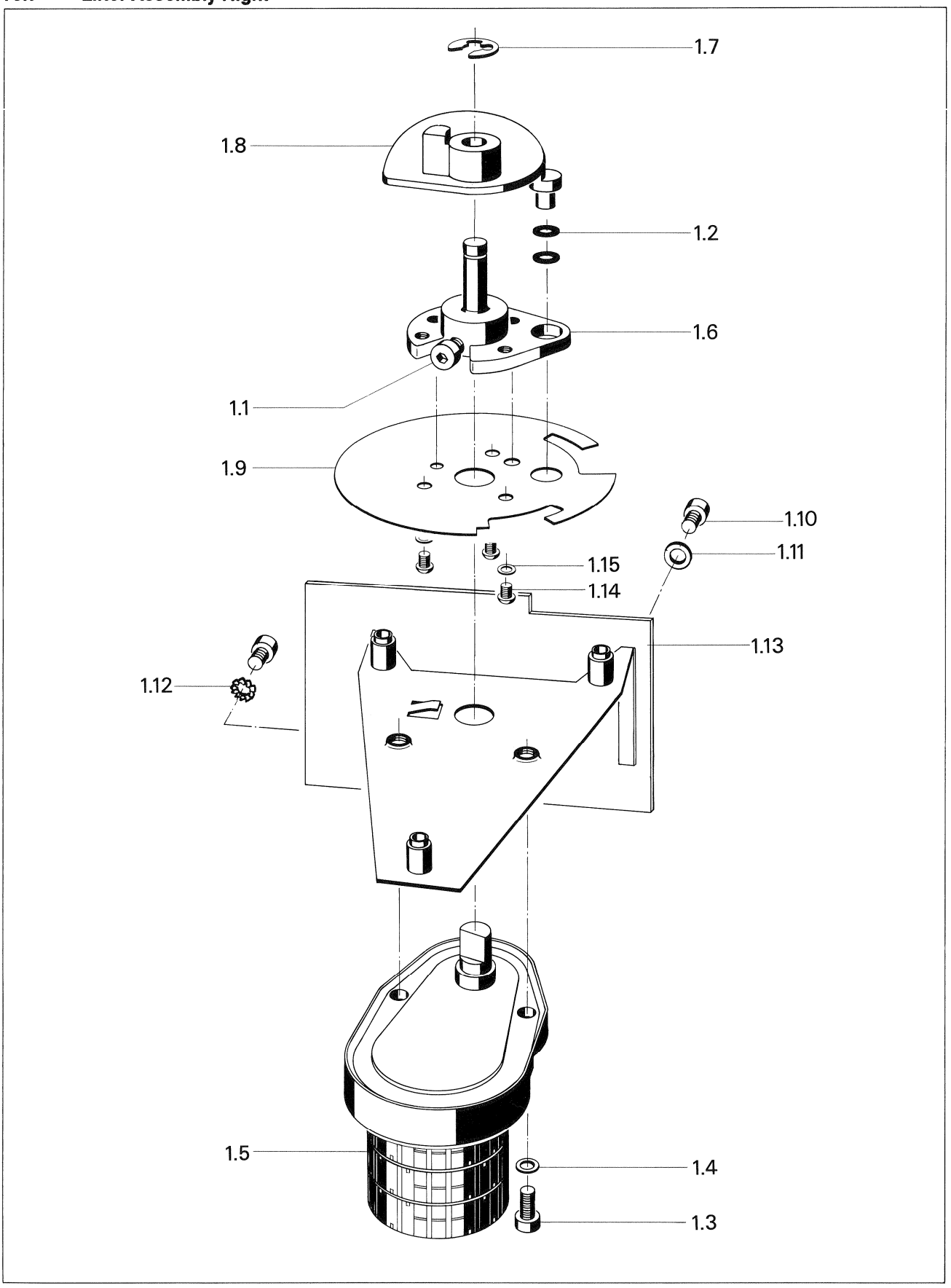

Lifter Assembly Right

Index	Qty.	Order No.	Part Name	Specification
		1.820.144.00	Tape guide assembly right	
1.1	1	21.53.0456	Allen screw	M4x10
1.2	2	1.710.165.07	Ring	
1.3	2	21.53.0472	Allen screw	M4x16
1.4	2	24.16.1040	Fin washer	D4,3/7
1.5	1	1.820.142.00	Synchronous motor, complete	
1.6	1	1.820.915.00	Brass flange	
1.7	1	24.16.3060	Circlip	D6,0
1.8	1	1.820.144.01	Driving cam right	
1.9	1	1.820.141.06	Control cam right	
1.10	4	21.53.0354	Allen screw	M3x6
1.11	3	23.01.1032	Washer	D3,2/6x0,5
1.12	1	24.16.2030	Serrated washer	D3,2
1.13	1	1.820.773.82	Tape lifter control board	
1.14	3	21.51.8354	Oval head allen screw	M3x6
1.15	3	24.16.1030	Fin washer	D3,2/5,5

10.8 Lifter Assembly Left

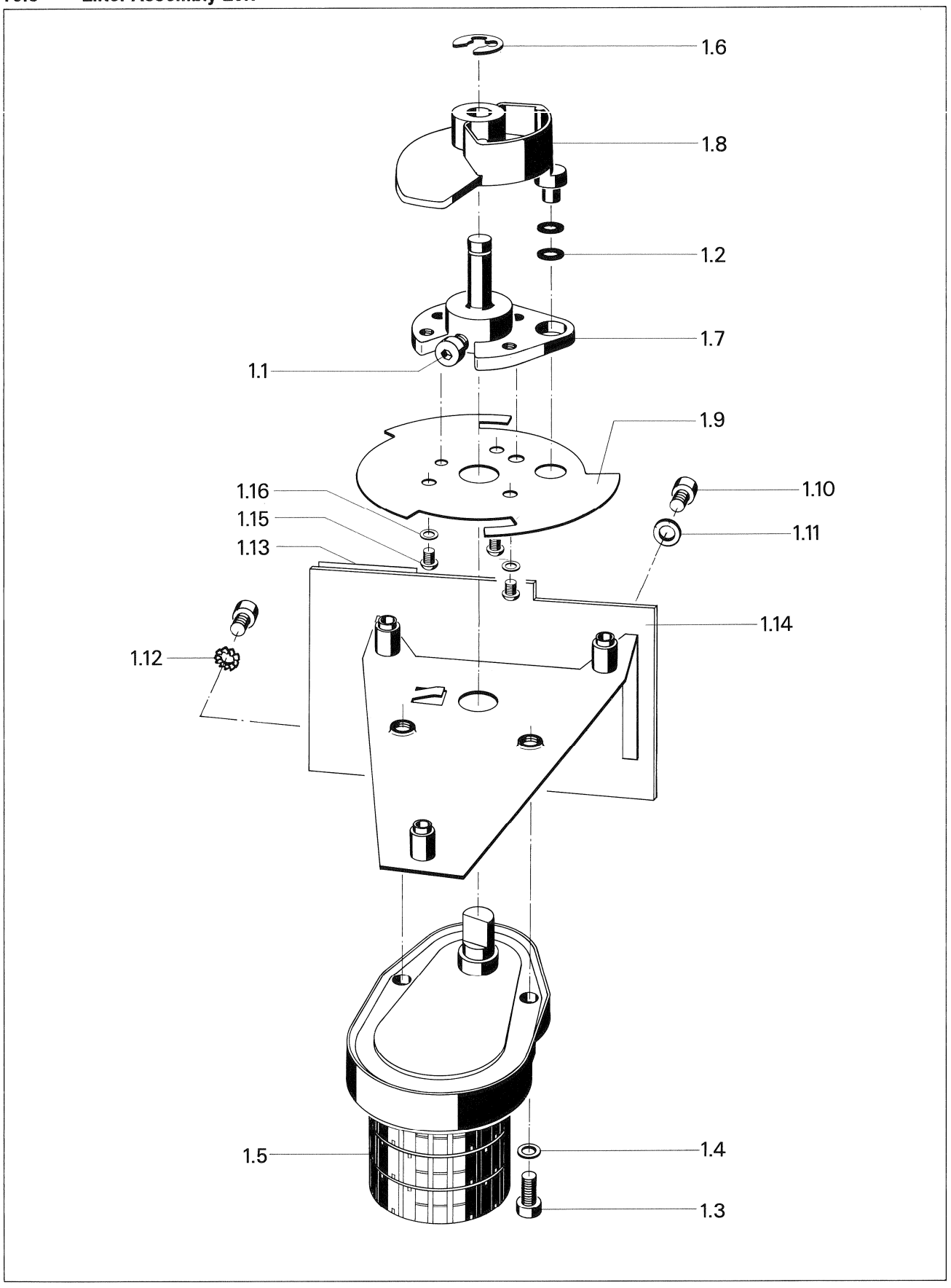

Lifter Assembly Left

Index	Qty.	Order No.	Part Name	Specification
		1.820.143.00	Tape guide assembly left	
1.1	1	21.53.0456	Allen screw	M4x10
1.2	2	1.710.165.07	Ring	
1.3	2	21.53.0472	Allen screw	M4x16
1.4	2	24.16.1040	Fin washer	D4,3/7
1.5	1	1.820.142.00	Synchronous motor, complete	
1.6	1	24.16.3060	Circlip	D6,0
1.7	1	1.820.914.00	Brass flange	
1.8	1	1.820.143.01	Driving cam left	
1.9	1	1.820.140.06	Control cam left	
1.10	4	21.53.0354	Allen screw	M3x6
1.11	3	23.01.1032	Washer	D3,2/6x0,5
1.12	1	24.16.2030	Serrated washer	D3,2
1.13	1	1.820.140.08	Insulation	
1.14	1	1.820.773.82	Tape lifter control board	
1.15	3	21.51.8354	Oval head allen screw	M3x6
1.16	3	24.16.1030	Fin washer	D3,2/5,5

10.9 Tacho Roller Assembly

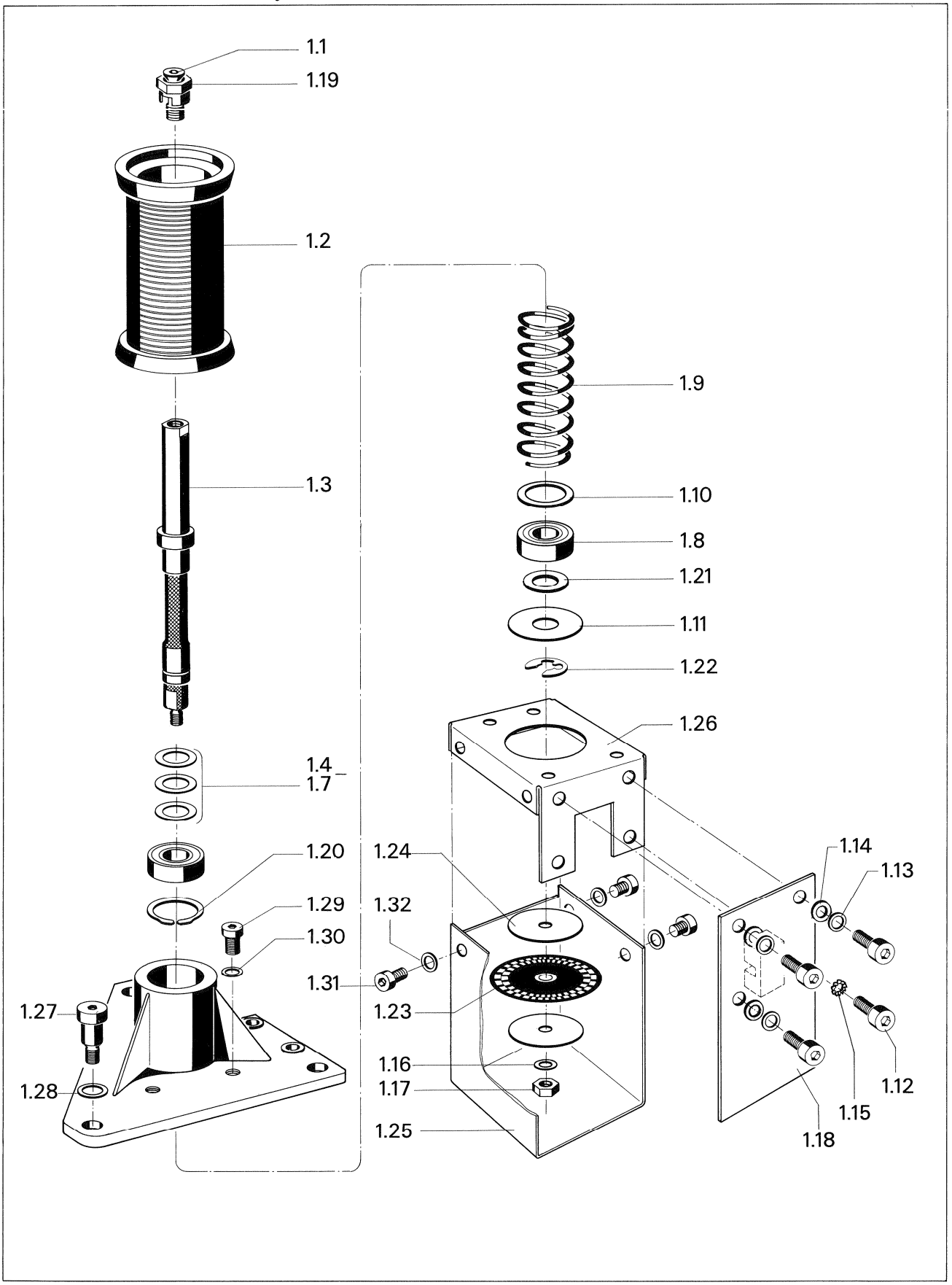

Tacho Roller Assembly 2"

Index	Qty.	Order No.	Part Name	Specification
		1.820.183.00	Tacho roller assembly	2"
1.1	1	1.010.036.21	Countersunk screw special	M4x14
1.2	1	1.820.450.08	Tacho roller	2"
1.3	1	1.820.181.01	Tacho roller shaft	1"/2"
1.4	1	1.010.058.23	Spacer	D8,1/12x0,1
1.5	1	1.010.059.23	Spacer	D8,1/12x0,12
1.6	1	1.010.060.23	Spacer	D8,1/12x0,15
1.7	1	1.010.061.23	Spacer	D8,1/12xD,18
1.8	2	41.04.0110	Ball bearing	D8/16x6
1.9	1	1.010.201.37	Spring form D	D15,5x49
1.10	1	1.010.066.23	Spacer	D12,1/15,8x0,5
1.11	1	1.010.085.23	Washer	D8,1/19,0x0,5MS
1.12	4	21.53.0353	Allen screw	M3x5
1.13	3	24.16.1030	Fin washer	D3,2/5,5
1.14	3	23.01.1032	Washer	D3,2/6x0,5
1.15	1	24.16.2030	Serrated washer	D3,2
1.16	1	24.16.1040	Fin washer	D4,3/7
1.17	1	22.01.8040	Nut	0,8D,M4
1.18	1	1.820.770.82	Move sensor board	
1.19	1	1.820.400.06	Roller driver	
1.20	1	24.99.0131	Circlip	D16
1.21	1	1.062.210.11	Spacer	D8,2/12x0,5
1.22	1	24.16.3060	Circlip	D6,0
1.23	1	1.820.180.04	Tacho disk	
1.24	2	1.010.084.23	Washer	D4,1/20,0x1,5AL
1.25	1	1.820.180.05	Cover tacho disk	
1.26	1	1.820.180.03	Sensor board holder	
1.27	3	1.010.035.21	Precision screw	M4x16
1.28	3	24.16.1050	Fin washer	D5,3/9
1.29	4	21.53.0356	Allen screw	M3x10
1.30	4	24.16.1030	Fin washer	D3,2/5,5
1.31	4	21.53.0353	Allen screw	M3x5
1.32	4	24.16.1030	Fin washer	D3,2/5,5

Tacho Roller Assembly 1"

Index	Qty.	Order No.	Part Name	Specification
		1.820.182.00	Tacho roller assembly	1"
1.2		1.820.440.08	Tacho roller	1"

10.10 Prestabilizer Assembly

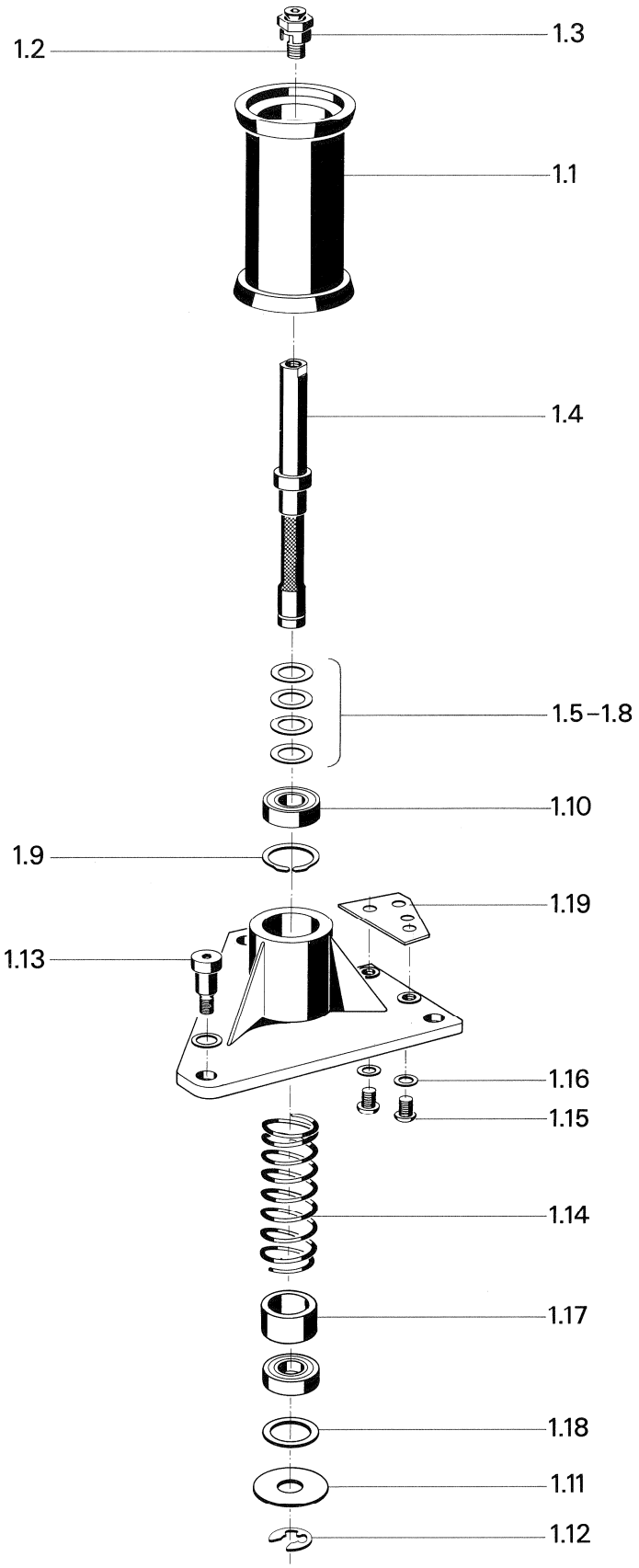

Prestabilizer Assembly 2"

Index	Qty.	Order No.	Part Name	Specification
		1.820.173.00	Prestabilizer assembly compl	2"
1.1	1	1.820.450.03	Prestabilizer roller	2"
1.2	1	1.010.026.21	Countersunk screw special	M4x14
1.3	1	1.820.400.06	Roller driver	
1.4	1	1.820.171.01	Prestabilizer roller shaft	1"/2"
1.5	1	1.010.058.23	Spacer	D8,1/12x0,1
1.6	1	1.010.059.23	Spacer	D8,1/12x0,12
1.7	1	1.010.060.23	Spacer	D8,1/12x0,15
1.8	1	1.010.061.23	Spacer	D8,1/12x0,18
1.9	1	24.99.0131	Circlip	D16
1.10	2	41.04.0110	Ball bearing	D8/16x6
1.11	1	1.010.085.23	Washer	D8,1/19,0x0,5MS
1.12	1	24.16.3060	Circlip	6,0
1.13	3	1.010.035.21	Precision screw	M4x16
1.14	1	1.010.201.37	Spring form D	D15,5x49
1.15	2	21.51.8355	Oval head allen screw	M3x8
1.16	2	24.16.1030	Fin washer	D3,2/5,5
1.17	1	1.010.154.27	Spacer tube	D13,6/15,9x11
1.18	1	1.062.210.11	Spacer	D8,2/12x0,5
1.19	1	1.820.170.04	Support plate	

Prestabilizer Assembly 1"

Index	Qty.	Order No.	Part Name	Specification
		1.820.172.00	Prestabilizer assembly compl.	1"
1.1	1	1.820.440.03	Prestabilizer roller	1"

10.11 Capstan Motor

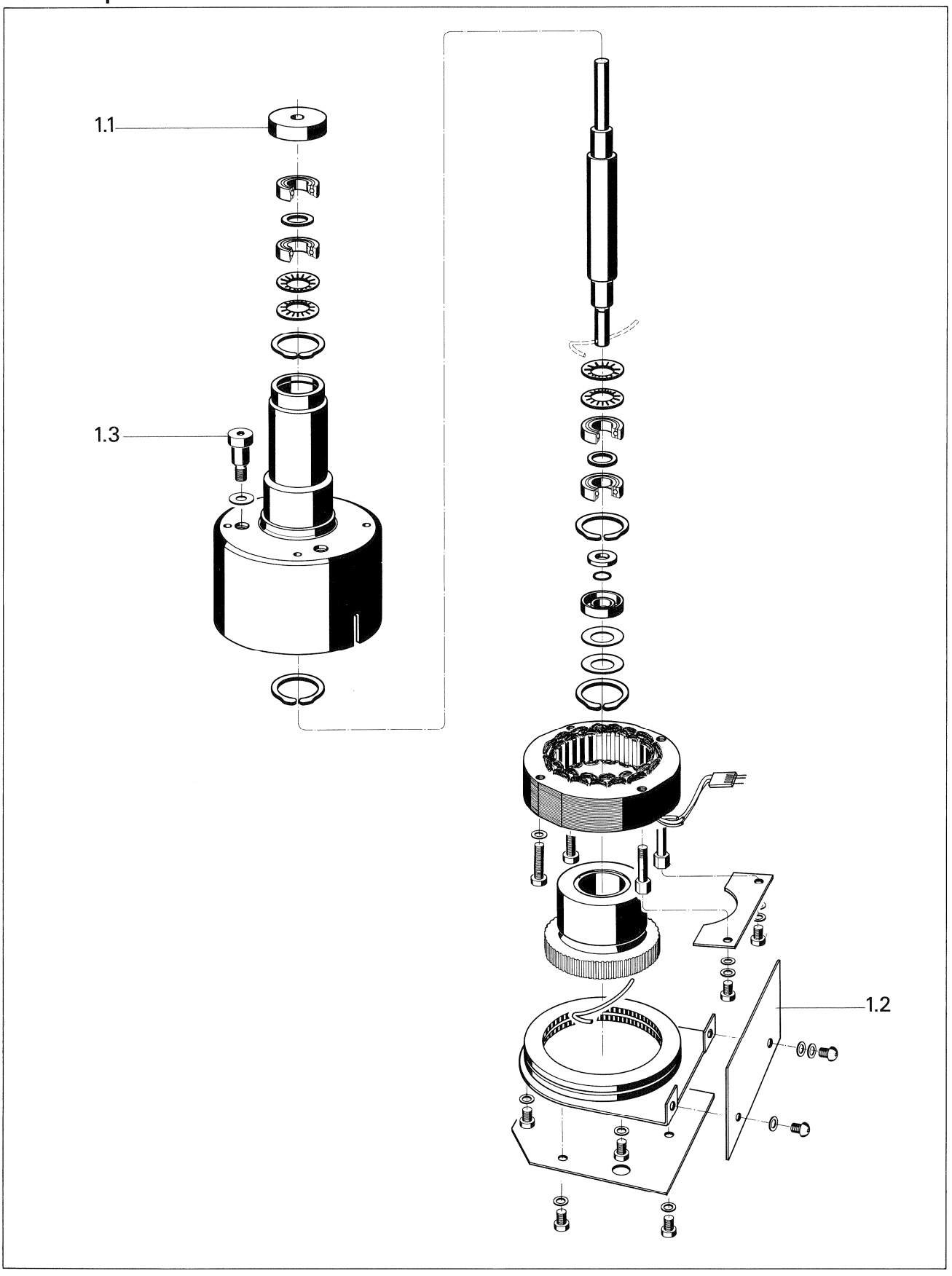

Capstan Motor
1st version:

Index	Qty.	Order No.	Part Name	Specification
	1	1.021.602.00	Capstan motor complete, equipped with sinter bearings, lubricated with PDP65 oil.	1"
	1	1.021.603.00	Capstan motor complete, equipped with sinter bearings, lubricated with PDP65 oil.	2"
1.1	1	1.021.601.07	Bearing cover	
1.2	1	1.021.695.83	Tacho sensor board	
1.3	3	1.010.035.21	Spec.cyl.screw to mount motor to chassis	M4x16

Attention: Apply one drop of PDP65 oil every six months. (Order No. 20.020.401.04).
This motor verison is not marked with any sticker-label.

Capstan Motor
2nd version:

Index	Qty.	Order No.	Part Name	Specification
	1	1.021.602.81	Capstan motor complete, equipped with sinter bearings, lubricated with grease "Constant GLY"	1"
	1	1.021.603.81	Capstan motor complete, equipped with sinter bearings, lubricated with grease "Constant GLY"	2"
1.1	1	1.021.601.07	Bearing cover	
1.2	1	1.021.695.83	Tacho sensor board	
1.3	3	1.010.035.21	Spec.cyl.screw to mount motor to chassis	M4x16

Attention: Use grease "Klüber Constant GLY2100" for lubrication only!
This version of motor is marked with a red sticker-label.

Capstan Motor
3rd version:

Index	Qty.	Order No.	Part Name	Specification
	1	1.021.622.00	Capstan motor complete, equipped with ball bearings.	1"
	1	1.021.623.00	Capstan motor complete, equipped with ball bearings.	2"
1.1	1	1.021.621.09	Bearing cover	
1.2	1	1.021.695.83	Tacho sensor board	
1.3	3	1.010.035.21	Spec.cyl.screw. to mount motor to chassis	M4x16

Attention: This motor contains permanently lubrication ball bearings.
DO NOT APPLY OIL! Damage to the ball bearings may occur!
This version of motor is market with a white sticker label.

10.12 Tape Tension Assembly

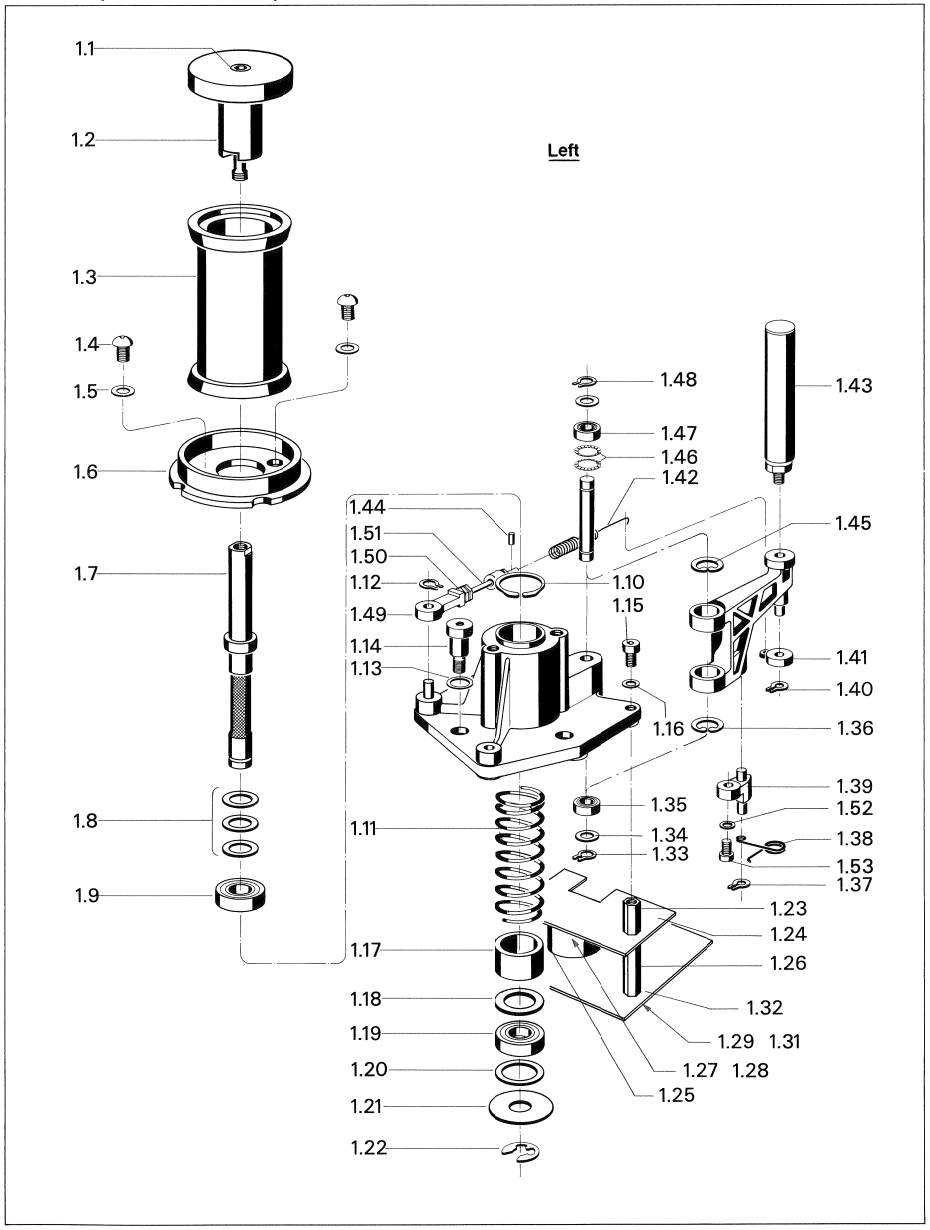

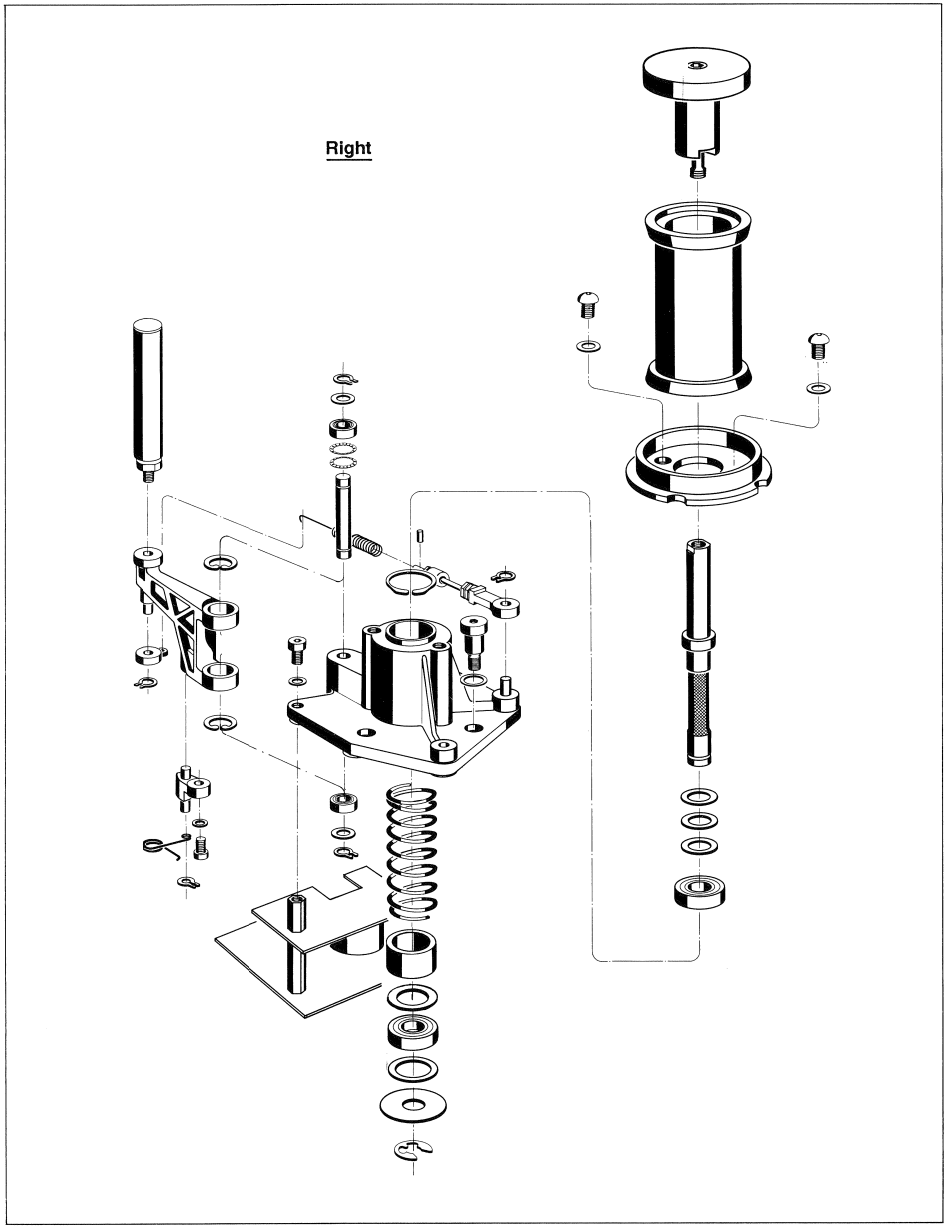

Tape Tension Assembly 2"
Left/Right

Index	Qty.	Order No.	Part Name	Specification
		1.820.388.81	Tape tension assembly right	2"
		1.820.387.81	Tape tension assembly left	2"
1.1	1	1.010.049.21	Counter sunk allen screw special	M4x40
1.2	1	1.820.450.05	Guide roller cover	
1.3	1	1.820.450.02	Guide roller steel	
1.4	2	21.51.8354	Oval head allen screw	Ni,M3x6
1.5	2	24.16.1030	Fin washer	D3,2/5,5
1.6	1	1.820.150.12	Plate below guide roller	
1.7	1	1.820.155.01	Shaft	
1.8	1	1.010.058.23	Shim	D8,1/12x0,1
	1	1.010.059.23	Shim	D8,1/12x0,15
	1	1.010.060.23	Shim	D8,1/12x0,18
	1	1.010.061.23	Shim	D8,1/12x0,2
1.9	1	41.04.0110	Ball bearing	
1.10	1	24.99.0131	Circlip	D16,0mm
1.11	1	1.010.201.37	Spring	
1.12	1	24.99.0129	Circlip	D3,0mm
1.13	3	24.16.1040	Fin washer	D4,3/7,0
1.14	3	1.010.035.21	Cyl.screw special	M4x16
1.15	2	21.53.0356	Allen screw	M3x10
1.16	2	24.16.1030	Fin washer	D3,2/5,5
1.17	1	1.010.154.27	Distance tube	D13,5/15,9x11
1.18	1	1.010.066.23	Shim	D12,1/15,8x0,5
1.19	1	41.04.0110	Ball bearing	
1.20	1	1.062.210.11	Shim	D8,2/12x0,5
1.21	1	1.010.085.23	Shim	D8,1/19x0,5
1.22	1	24.16.3060	Circlip	D6,0mm
1.23	2	1.010.068.27	Hexagon bolt	M3x14
1.24	1	1.820.150.10	Fixing plate	
1.25	1	1.820.153.00	Hall potentiometer	
1.26	2	1.010.127.27	Hexagon bolt	M3/M3x26
1.27	2	24.16.1030	Fin washer	D3,2/5,5
1.28	2	21.53.0353	Allen screw	M3x5
1.29	2	23.01.1032	Wascher	D3,2/6x0,5
1.30	2	24.16.1030	Fin washer	D3,2/5,5
1.31	2	21.53.0355	Allen screw	M3x8
1.32	1	1.820.772.00	Tape tension board	
1.33	1	24.16.5040	Circlip	D4,0mm
1.34	1	1.062.210.09	Shim	D4,3/7,5x0,2
1.35	1	41.99.0104	Ball bearing	
1.36	1	24.16.4100	Circlip	D10.0mm
1.37	1	24.99.0122	Circlip	D2,5mm
1.38	1	1.820.150.17	Spring special left	
	1	1.820.151.17	Spring special right	
1.39	1	1.820.150.16	Cam	
1.40	1	24.99.0129	Circlip	D3,0mm
1.41	1	1.820.150.07	Hook	
1.42	1	1.010.132.37	Spring	
1.43	1	1.820.165.81	Tape tension roller	
1.44	1	25.06.6054	Notched pin	
1.45	1	24.16.4100	Circlip	D10,0mm
1.46	2	37.02.0201	Cup spring	
1.47	1	41.99.0104	Ball bearing	
1.48	1	24.16.5040	Circlip	D4,0mm
1.49	1	1.820.150.06	Hook	
1.50	1	22.01.8030	Nut 0.8d	M3
1.51	1	1.820.154.00	Threaded pin compl.	
1.52	1	24.16.1030	Fin washer	D3,2/5,5
1.53	1	21.53.0355	Allen screw	M3x8

Tape Tension Assembly 1"
Left/Right

Index	Qty.	Order No.	Part Name	Specification
		1.820.385.81	Tape tension assembly right	1"
		1.820.386.81	Tape tension assembly left	1"
1.2	1	1.820.400.05	Guide roller cover	
1.3	1	1.820.440.01	Guide roller	
1.42	1	1.010.131.37	Spring	
1.43	1	1.820.164.81	Tape tension roller	

10.13 Pinch Roller Assembly

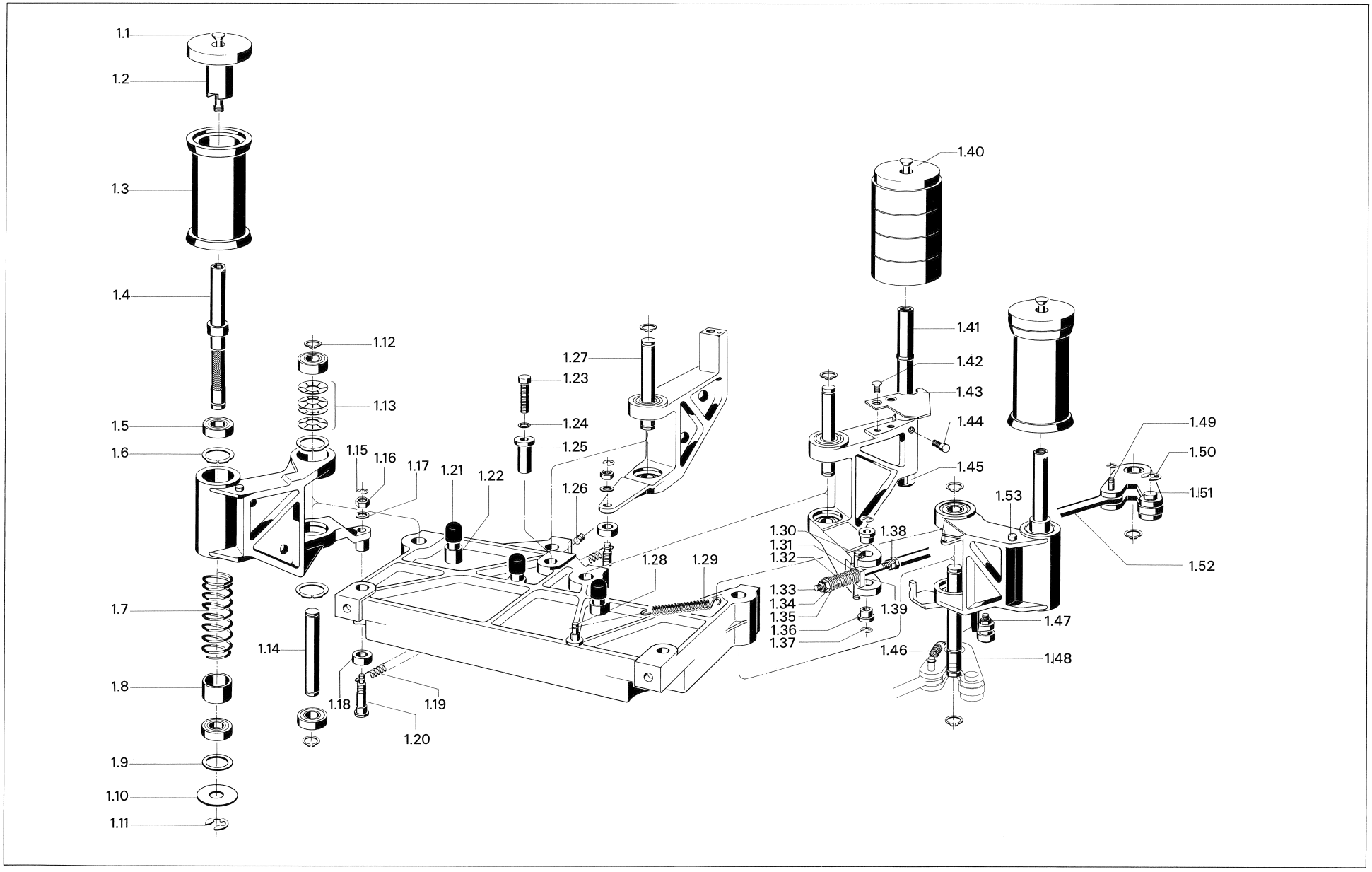

Pinch Roller Assembly 2"

Index	Qty.	Order No.	Part Name	Specification
		1.820.131.00	Pinch roller assembly ★ (not included)	2"compl.
1.1	3	1.010.049.21	Counter sunk allen screw special	M4
1.2	2	1.820.450.05	Guide roller cover	
1.3	2	1.820.450.01	Guide roller	
1.4	2	1.820.125.02	Guide roller shaft	
1.5	12	41.04.0110	Ball bearing	
1.6	10	24.99.0131	Circlip	D16,0mm
1.7	2	1.010.201.37	Spring	
1.8	2	1.010.154.27	Distance tube	
1.9	2	1.062.210.11	Shim	D8,2/12x0,5
1.10	2	1.010.085.23	Shim	D8,1/19x0,5
1.11	2	24.16.3060	Circlip	D6,0mm
1.12	9	24.16.5080	Circlip	D8,0mm
1.13	16	37.02.0203	Cup Spring	
1.14	2	1.820.120.13	Shaft (left and pinch roller)	
1.15	2	24.16.3023	Circlip	D2,3mm
1.16	3	22.01.8040	Nut 0,8d	M4
1.17	3	24.16.1040	Fin washer	
1.18	4	1.820.120.19	Roller (POM)	
1.19	1	1.010.209.37	Spring	
1.20	1	1.820.120.17	Guiding shaft long	
1.21	3	1.077.100.20	Cap (rubber)	
1.22	3	1.820.120.34	Bolt	
1.23 ★	3	21.53.0464	Allen screw	M4x30
1.24 ★	3	24.16.1040	Fin washer	
1.25 ★	3	1.820.090.08	Bush	
1.26	8	21.59.4505	Grub screw	M5x8
1.27	1	1.820.120.14	Shaft (lifter)	
1.28	1	1.830.125.07	Pin for spring	
1.29	1	1.010.210.37	Spring	
1.30	1	1.820.120.24	Joint	
1.31	1	1.820.120.33	Bush (POM)	
1.32	1	1.010.046.37	Spring for pinch roller	
1.33	1	1.820.120.26	Threaded pin	
1.34	1	22.99.0116	Lock nut	M4
1.35	1	1.820.120.25	Shim	D4,5/10x1
1.36	2	1.820.120.23	Bush (POM)	
1.37	5	24.16.3032	Circlip	D3,2mm
1.38	1	22.01.8040	Nut 0,8d	M4
1.39	1	23.01.2043	Washer	
1.40 ★	1	1.820.472.04	Pinch roller cover	
1.41	1	1.820.131.01	Pinch roller shaft	
1.42	2	21.53.2354	Counter sunk allen screw	M3x6
1.43	1	1.820.120.31	Plate	
1.44	1	21.53.0355	Allen screw	M3x8
1.45	1	22.99.0130	Lock nut	M6
1.46	1	1.010.115.37	Spring	
1.47	2	1.820.120.18	Guiding shaft short	
1.48	1	1.820.120.15	Shaft (right)	
1.49	1	1.820.120.22	Pin	
1.50	2	24.16.3040	Circlip	D4,0mm
1.51	1	1.820.120.21	Shaft (for guiding roller)	
1.52	1	1.820.120.20	Lever rod (brass)	
1.53	1	1.820.120.32	Bush (POM)	

Pinch Roller Assembly 1"

Index	Qty.	Order No.	Part Name	Specification
		1.820.125.81	Pinch roller assembly	1"compl.
1.2	2	1.820.400.05	Guide roller cover	
1.3	1	1.820.440.02	Guide roller left steel	
	1	1.820.440.01	Guide roller right	
1.40	1	1.820.420.05	Pinch roller cover	
1.41	1	1.820.125.05	Pinch roller shaft	

10.14 Brake Assembly

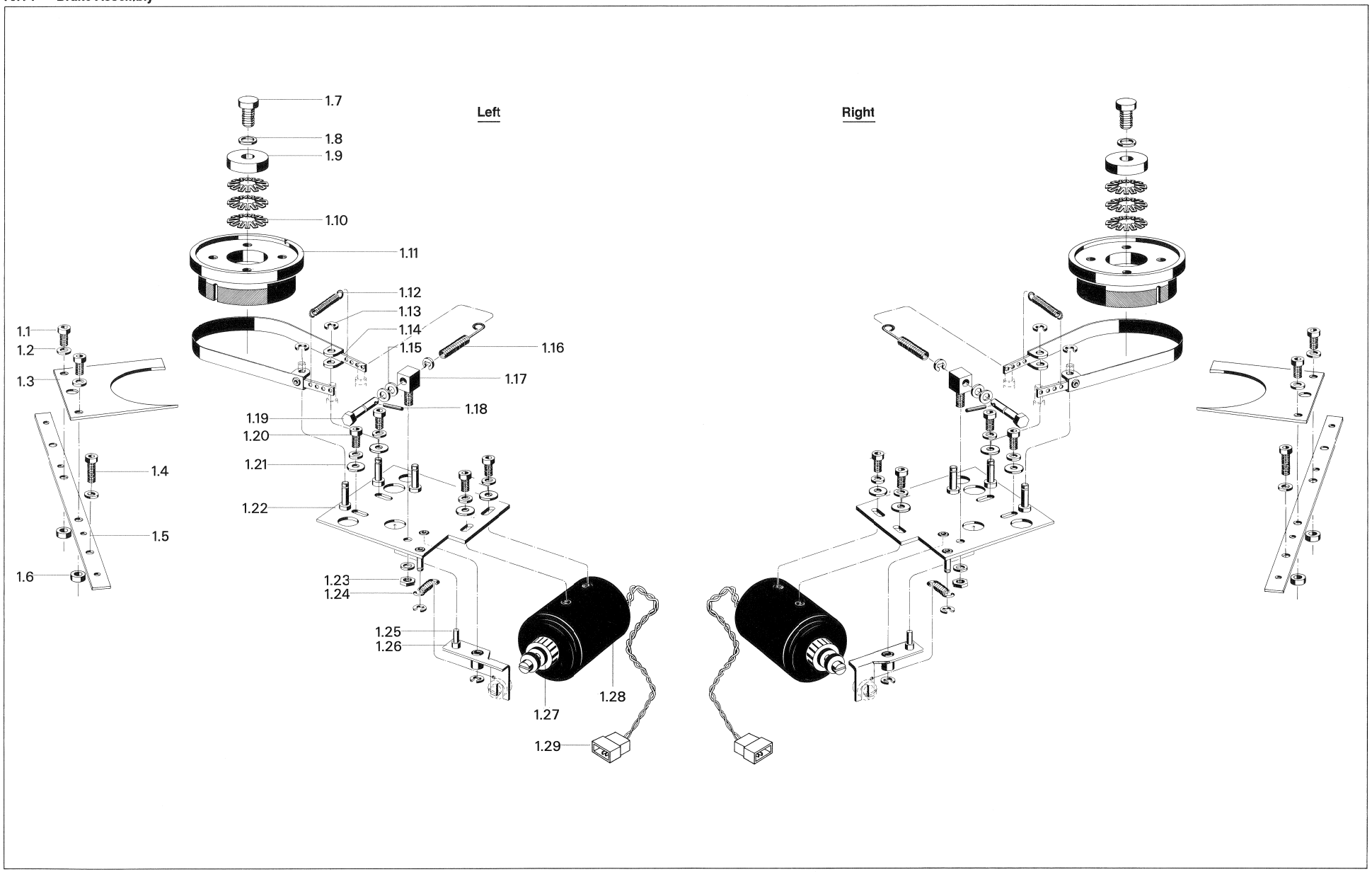

Brake Assembly

Index	Qty.	Order No.	Part Name	Specification
		1.080.230.00	Brake assembly compl.★(not included)	left
		1.080.240.00	Brake assembly compl.★(not included)	right
1.1	4	21.53.0454	Allen screw	M4x6
1.2	8	24.16.1040	Fin washer	
1.3★	1	1.820.090.02	Brake band guide	
1.4	2	21.53.0471	Allen screw	M4x14
1.5★	1	1.820.090.01	Strip	
1.6★	2	1.010.096.27	Distance tube	
1.7★	1	21.53.0521	Allen screw	M5x14
1.8★	1	24.16.1050	Fin washer	
1.9★	1	1.820.090.03	Pressure shim	
1.10★	3	24.16.6120	Cup spring serrated	
1.11★	1	1.820.201.00	Brake drum compl.	
1.12★	1	1.080.230.05	Spring	
1.13	3	24.16.3032	Circlip	D3,2mm
1.14★	1	1.080.238.00	Brake band compl.	
1.15	2	37.01.0102	Cup spring	
1.16★	1	1.080.230.07	Spring strong	
1.17	1	1.080.230.01	Support	
1.18	1	25.16.2106	Spring cotter	
1.19	1	1.080.230.02	Adjusting screw	
1.20★	2	21.53.0457	Allen screw	M4x12
1.21	4	23.01.1043	Washer	
1.22	1	1.080.233.00	Brake chassis	left
	1	1.080.243.00	Brake chassis	right
1.23	1	22.01.8040	Nut 0,8d	M4
1.24	1	1.080.112.02	Spring	
1.25	1	1.080.120.15	Rubber dumping hose	
1.26	1	1.080.236.00	Brake lever compl.	
1.27	1	1.014.753.00	Armature compl.	
1.28	1	1.014.750.00	Solenoid	
1.29	1	54.02.0400	Molex Connector	

10.15 Spooling Motor Assembly

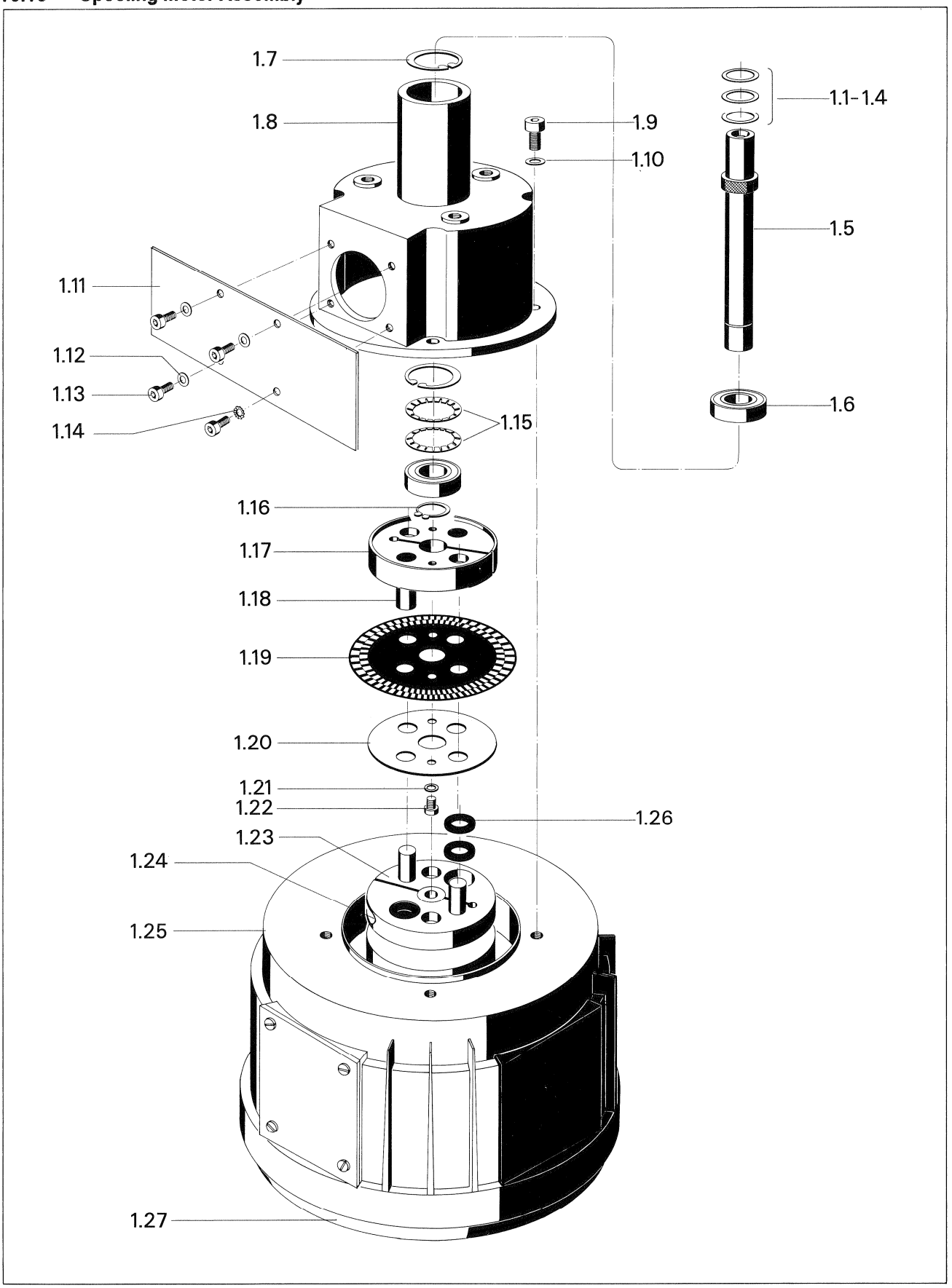

Spooling Motor Assembly

Index	Qty.	Order No.	Part Name	Specification
		1.820.192.00	Spooling motor assembly	1"/2"
1.1	1	1.010.062.23	Spacer	D12,1/15,8x0,1
1.2	1	1.010.063.23	Spacer	0,12
1.3	1	1.010.064.23	Spacer	0,15
1.4	1	1.010.065.23	Spacer	0,18
1.5	1	1.820.190.03	Spooling motor shaft	
1.6	2	41.99.0113	Ball bearing	D12/28x8
1.7	2	24.16.4280	Circlip	D28
1.8	1	1.820.190.01	Bearing case spooling motor	
1.9	4	21.54.0522	Allen screw	M5x16
1.10	4	24.16.1050	Fin washer	
1.11	1	1.820.771.83	Motor Tacho Board	
1.12	3	24.16.1030	Fin washer	
1.13	4	21.53.0354	Allen screw	M3x6
1.14	1	24.16.2030	Serrated washer	
1.15	2	37.02.0209	Cup spring	
1.16	1	24.16.5120	Circlip	D12
1.17	1	1.820.190.04	Upper part clutch	
1.18	4	25.06.8513	Stud	D6x24
1.19	1	1.820.190.06	Tacho disk	
1.20	1	1.820.190.07	Support for tacho disk	
1.21	2	24.16.1030	Fin washer	
1.22	2	21.53.0354	Allen screw	M3x6
1.23	1	1.820.190.05	Lower part clutch	
1.24	2	21.54.0522	Allen screw	M5x16
1.25		1.820.193.00	Motor compl.	
1.26	8	31.05.0002	Ring	D6x3,5
1.27	1 Set	1.820.193.01	Carbon brush complete	MC13S

10.16 Head Block

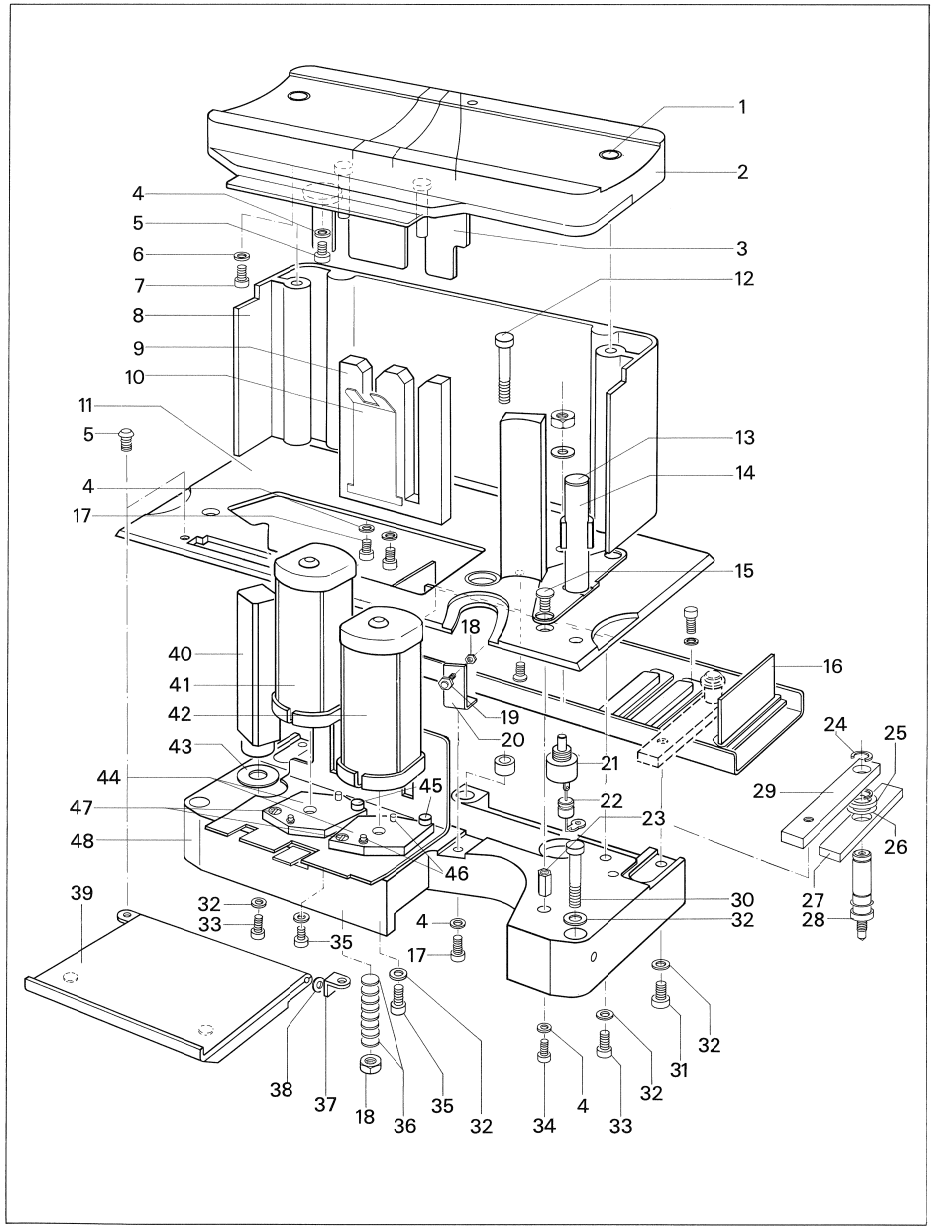

Index	Qty.	Order No.	Part Name	Specification
		1.050.152.81	Head block 24Ch, 2"	
1	2	1.010.036.21	Counter sunk allen screw special	M4x14
2	1	1.050.152.02	Splice block 2"	
3	1	1.050.150.06	Screening plate top	
4	8	24.16.1030	Fin washer	
5	3	21.51.8354	Oval head allen screw	M3x6
6	2	24.16.1025	Fin washer	
7	2	21.01.0278	Pan head allen screw, slotted	M2,5x5
8	1	1.050.151.04	Rear cover profile 2"	
9	1	1.050.151.05	Wire adapter (POM)	
10	1	1.050.152.04	Plastic cover 2"	
11	1	1.050.150.09	Head block cover plate	
12	1	1.050.152.03	Guiding element 2"	
13	1	1.820.163.03	Plastic cap	
14	1	1.820.492.00	Pivot 2" compl.	
15	3	21.51.2354	Counter sunk allen screw	M3x6
16	1	1.820.795.00	Head block identifier board	
17	2	21.53.0355	Chees head allen screw	M3x8
18	2	22.01.8030	Nut 0,8d	M3
19	1	1.050.182.00	Lifter stop (POM) compl.	
20	1	1.050.101.18	Bracket for lifter stop	
21	1	58.03.0502	Potentiometer 5kΩ / 10% / 0,5W / PCC compl.	
22	1	59.25.1221	Capacitor 220µF / 20% / 6,3V / EL compl.	
23	4	1.010.216.27	Hex stud	M3/M3x8
24	4	24.16.3050	Circlip	D6.0 mm
25	2	1.010.069.23	Washer	D7,1/12x1
26	4	1.010.109.23	Washer (HGW)	D7,1/12x0,3
27	2	1.050.150.02	Plate	
28	2	1.050.150.03	Special screw for connector plate	
29	2	1.050.150.04	Bracket for connector plate	
30	3	21.53.0462	Chees head allen screw	M4x25
31	2	21.53.0454	Chees head allen screw	M4x6
32	10	24.16.1040	Fin washer	
33	3	21.53.0456	Chees head allen screw	M4x10
34	4	21.530356	Chees head allen screw	M3x10
35	2	21.53.0455	Chees head allen screw	M4x8
36	20	37.01.0101	Cup spring	
37	2	1.050.101.13	Bracket for flap	
38	2	1.010.105.23	Washer (PTFE)	D3,2/6x0,25
39	1	1.820.944.00	Flap compl.	
40	1	1.216.826.00	Erase head 24Ch	
41	1	1.318.780.00	Record head 24Ch	
42	1	1.318.785.00	Reproduce head 24Ch	
43	2	1.020.500.01	Slim	D4,2/15,5x0,1
44	2	1.020.850.06	Swivel plate	
45	2	1.020.710.05	Azimuth screw special	
46	4	1.020.850.07	Threaded pin	M2,5
47	2	1.020.740.03	Counter sunk screw special	
48	1	1.050.198.00	Head block chassis	

Head Block

Index	Qty.	Order No.	Part Name	Specification
		1.050.151.81	Head block 16Ch, 2"	
40	1	1.216.926.00	Erase head 16Ch	
41	1	1.318.770.00	Record head 16Ch	
42	1	1.318.775.00	Reproduce head 16Ch	

Index	Qty.	Order No.	Part Name	Specification
		1.050.150.81	Head block 8Ch, 1"	
2	1	1.050.150.15	Splice block 1"	
8	1	1.050.150.10	Rear cover profile 1"	
9	1	1.050.150.23	Wire adapter (POM) 1"	
10	1	1.050.150.26	Plastic cover 1"	
12	1	1.050.150.25	Guiding element 1"	
14	1	1.820.491.00	Pivot 1" compl.	
39	1	1.820.945.00	Flap compl.	
40	1	1.216.726.00	Erase head 8Ch	
41	1	1.318.760.00	Record head 8Ch	
42	1	1.318.765.00	Reproduce head 8Ch	

Index	Qty.	Order No.	Part Name	Specification
		1.050.152.82	Head block 24Ch, 2"	
14	1	1.050.180.00	Pivot new 2" compl.	

Index	Qty.	Order No.	Part Name	Specification
		1.050.151.82	Head block 16Ch, 2"	
14	1	1.050.180.00	Pivot new 2" compl.	

Index	Qty.	Order No.	Part Name	Specification
		1.050.150.82	Head block 8Ch, 1"	
14	1	1.050.179.00	Pivot new 1" compl.	

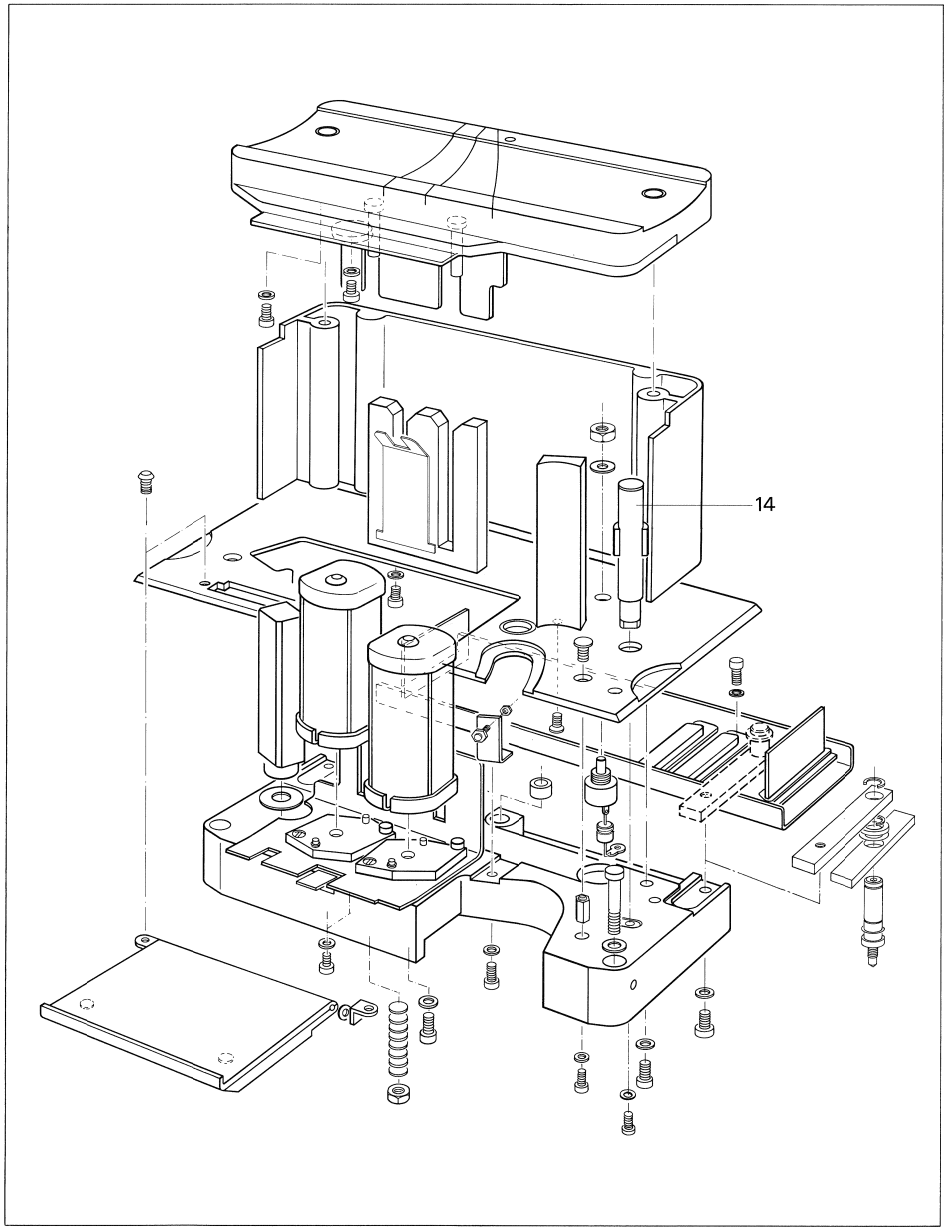

10.17 Release Cable

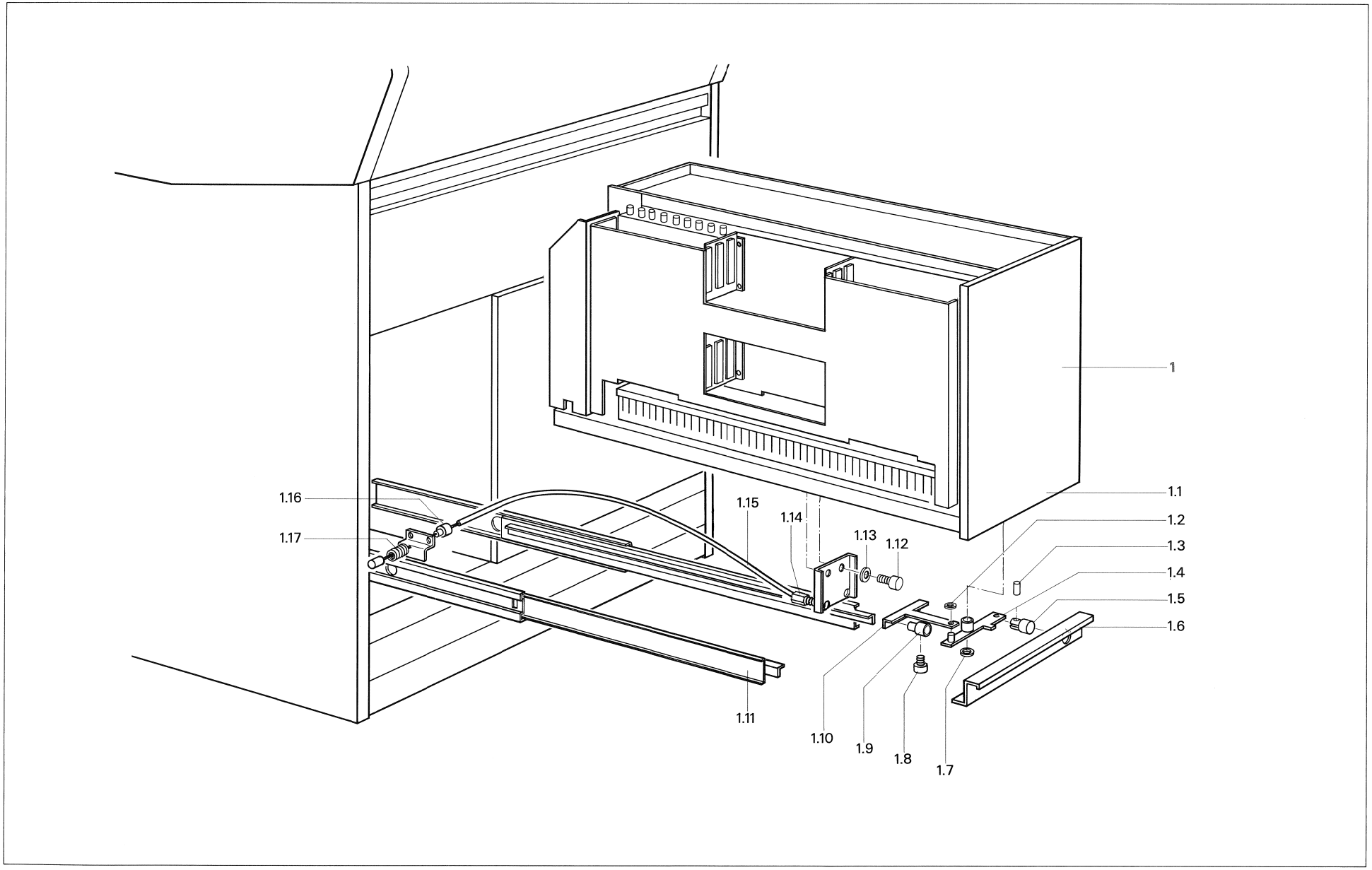

Release Cable

Index	Qty.	Order No.	Part Name	Specification
1		1.820.370.81	Drawer for audio (without amplifiers)	
1.1	1	1.820.370.04	Front cover	
1.2	2	24.16.3032	Circlip	
1.3	1	25.06.8356	Cylindrical pin	D4x10
1.4	1	1.820.374.00	Lever	
1.5	1	1.820.370.21	Nob for lock	
1.6	1	1.820.370.05	Hand grip	
1.7	1	24.16.3032	Circlip	
1.8	2	21.53.0454	Allen screw	M4x6
1.9	2	1.820.263.09	Adjustment collar for set screw	
1.10	1	1.820.263.03	Bracket	
1.11	2	1.820.310.29	Rail Set of 2 pieces	
1.12	2	21.53.0454	Allen screw	M3x5
1.13	2	24.16.1040	Washer	
1.14	2	1.820.263.06	Adjustment screw for release cable	
1.15	2	1.820.370.19	Release cable	
1.16	2	1.820.263.12	Collar	
1.17	2	1.010.089.37	Spring	

10.18 Labels

LIFTER	1.011.210.07	LOC 1	1.011.210.17	ROLL BACK	1.011.210.29	FADER START	1.011.210.43
LOC START	1.011.210.08	LOC 2	1.011.210.18	RLB PLAY	1.011.210.30	LAP	1.011.210.44
FADER	1.011.210.09	LOC 3	1.011.210.19	RLB REC	1.011.210.31	BACK SPACE	1.011.210.45
VARI SPEED	1.011.210.10	LOC 4	1.011.210.20	SET ADDR	1.011.210.32	HOLD REV/PLAY	1.011.210.46
REM CONTR	1.011.210.11	LOC 5	1.011.210.23	SET VARI	1.011.210.33	SPEED SELECT	1.011.210.48
TAPE DUMP	1.011.210.13	WATCH	1.011.210.24	SET TIMER	1.011.210.34	UN LOAD	1.011.210.49
RESET TIMER	1.011.210.14	TRANS	1.011.210.25	LIBR WIND	1.011.210.41	TRANS REV/PLAY	1.011.210.50
ZERO LOC	1.011.210.15	REV PLAY	1.011.210.27	SPOT ERASE	1.011.211.42	HOLD	1.011.210.54

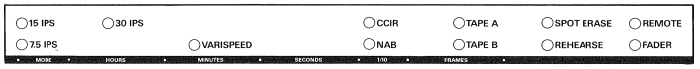

1.820.054.02

METER ON	M REF ▽	M REF △	AUTOREC ALIGN	AUTOPAR ALIGN	MANUAL ALIGN	STORE START	NRS ALIGN
0 dB	−10 dB	−20 dB	REPRO LEVEL	REPRO TREBLE	REPRO BASS	REF TAPE PRESET	UNCAL MODE
30 Hz SWEEP	1 kHz SWEEP	10 kHz SWEEP	RECORD LEVEL	RECORD TREBLE	RECORD BIAS	BIAS PRESET	MANUAL ALIGN
GEN ON	GENFREQ ▽	GENFREQ △	CHANNEL ◁	CHANNEL ▷	PARAM ▽	PARAM △	AUTO ALIGN

1.820.605.00

ALL READY	SET ENABLE	R'HEARSE	DOLBY HX PRO	ALL READY
ALL SAFE	NAB	MASTER SAFE	DELAY INHIBIT	ALL SAFE
ALL INPUT	CCIR	AUTO INPUT	AUTO MUTE	ALL INPUT
ALL SYNC	TAPE A	CHANNEL ON	NRS ON	ALL SYNC
ALL REPRO	TAPE B	CHANNEL OFF	NRS OFF	ALL REPRO
NRS TONE	STORE	1	2	NRS TONE
3	4	5		3

1.820.606.00

SAFE 1.820.604.01

INPUT 1.820.604.02

SYNC 1.820.604.03

REPRO 1.820.605.04

▷ 1.080.260.14

PLAY 1.080.260.15

REC 1.080.260.16

STOP 1.080.260.17

EDIT 1.080.260.18

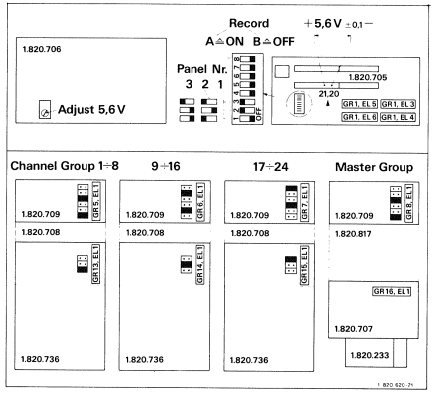

1.820.620.21

1	2	3	4	5	6	7	8
9	10	11	12	13	14	15	16
17	18	19	20	21	22	23	24

1.820.607.00

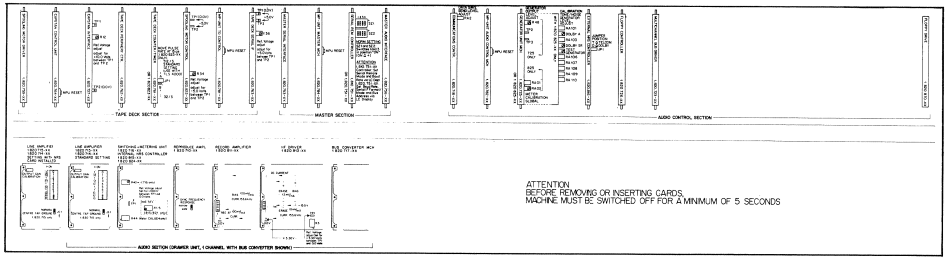

1.820.311.08

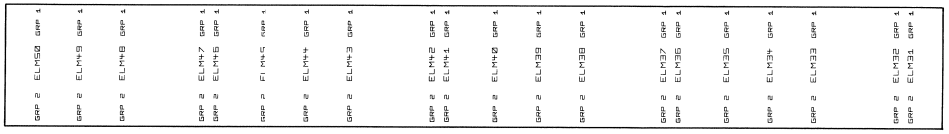
1.820.370.25

Labels

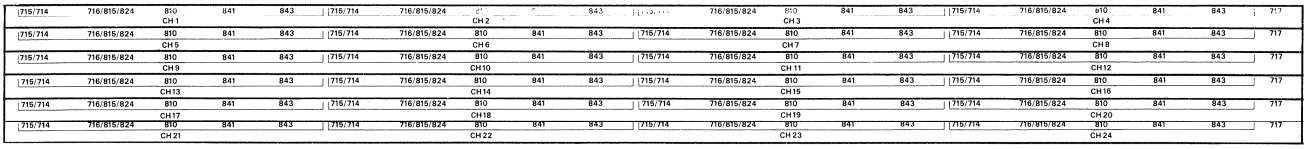

1.820.370.27

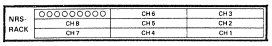

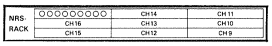

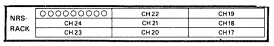

+24V		−15V			+15V		+5.6V		SUPPLY VOLTAGES
T2A	T1A	T2A	T2A	T1A	T2A	T2A	T1A	T1A	ALL FUSES SLOW BLOW
NRS	PREAMP	UPPER	LOWER	PREAMP	UPPER	LOWER	UPPER	LOWER	ELECTRONICS RACK

1.820.370.26

		−15V			+15V		+5.6V		SUPPLY VOLTAGES
T2A	T1A	T2A	T3.15A	T1A	T2A	T3.15A	T1A	T1A	ALL FUSES SLOW BLOW
AUX	PREAMP	UPPER	LOWER	PREAMP	UPPER	LOWER	UPPER	LOWER	ELECTRONICS RACK

1.820.370.39

ALL FUSES T3.15A SLOW BLOW									
+24V		−15V			+15V		+5.6V		SUPPLY VOLTAGES
AUX	PREAMP	UPPER	LOWER	PREAMP	UPPER	LOWER	UPPER	LOWER	ELECTRONICS RACK

1.820.370.42

BEFORE REMOVING OR INSERTING CARDS, MACHINE MUST BE SWITCHED OFF MINIMUM 5 SEC

1.820.500.31